US009151180B2

(12) **United States Patent**
Veilleux, Jr.

(10) **Patent No.: US 9,151,180 B2**
(45) **Date of Patent: Oct. 6, 2015**

(54) **LUBRICATION DRIVEN GAS TURBINE ENGINE ACTUATION SYSTEM**

(75) Inventor: **Leo J. Veilleux, Jr.**, Wethersfield, CT (US)

(73) Assignee: **HAMILTON SUNDSTRAND CORPORATION**, Windsor Locks, CT (US)

(*) Notice: Subject to any disclaimer, the term of this patent is extended or adjusted under 35 U.S.C. 154(b) by 576 days.

(21) Appl. No.: **12/815,456**

(22) Filed: **Jun. 15, 2010**

(65) **Prior Publication Data**

US 2011/0302903 A1 Dec. 15, 2011

(51) **Int. Cl.**

F02C 7/06	(2006.01)
F01D 25/20	(2006.01)
F01D 17/16	(2006.01)
F01D 25/18	(2006.01)

(52) **U.S. Cl.**

CPC ***F01D 25/20*** (2013.01); ***F01D 17/16*** (2013.01); ***F01D 25/18*** (2013.01); ***F02C 7/06*** (2013.01); *Y02T 50/672* (2013.01)

(58) **Field of Classification Search**

CPC F01D 25/18; F01D 25/20; F02C 7/14; F02C 7/06

USPC 60/39.08; 184/6.11

See application file for complete search history.

(56) **References Cited**

U.S. PATENT DOCUMENTS

2,761,387	A		9/1956	Gaubatz
2,780,172	A		2/1957	Coar
3,011,308	A		12/1961	Wotring
3,026,929	A		3/1962	Burns
3,357,178	A	*	12/1967	Meyers 60/39.25
4,049,401	A	*	9/1977	Smith 55/401
4,171,611	A	*	10/1979	Hueller 60/39.08
4,708,030	A		11/1987	Cordner
5,028,803	A		7/1991	Reynolds
5,121,599	A	*	6/1992	Snyder et al. 60/779
5,159,808	A		11/1992	Kast
5,220,793	A	*	6/1993	McGlone et al. 60/734
5,241,814	A		9/1993	Butler
5,272,870	A		12/1993	Grieb et al.
5,349,811	A	*	9/1994	Stickler et al. 60/776
5,365,732	A	*	11/1994	Correa 60/39.281
5,414,992	A		5/1995	Glickstein
5,575,159	A		11/1996	Dittell
5,694,764	A	*	12/1997	Blain et al. 60/787
6,035,626	A		3/2000	Wahl et al.
6,176,076	B1		1/2001	Ford
6,182,435	B1		2/2001	Niggemann et al.
6,263,864	B1		7/2001	Kelley
6,286,299	B1	*	9/2001	Junquera 60/39.08
7,063,734	B2	*	6/2006	Latulipe et al. 96/189

(Continued)

FOREIGN PATENT DOCUMENTS

EP	2071140	6/2009
FR	2925594	6/2009

OTHER PUBLICATIONS

Extended European Search Report, dated Feb. 8, 2012, EP Application No. 11169357.8.

Primary Examiner — Gerald L Sung

(74) *Attorney, Agent, or Firm* — Carlson, Gaskey & Olds, P.C.

(57) **ABSTRACT**

A lubrication system for a gas turbine engine includes a variable output lubricant pump operable to supply lubricant to an actuator system.

8 Claims, 2 Drawing Sheets

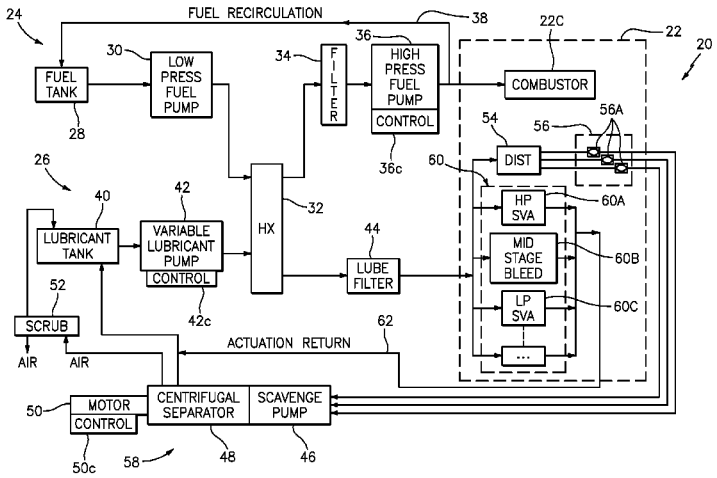

(56) **References Cited**

U.S. PATENT DOCUMENTS

7,118,336	B2 *	10/2006	Waddleton	416/1
7,185,496	B2	3/2007	Herlihy	
7,260,926	B2	8/2007	Sabatino et al.	
7,337,761	B2	3/2008	Bickley	
7,342,763	B2	3/2008	Mladenik et al.	
7,377,110	B2 *	5/2008	Sheridan et al.	60/772
7,401,461	B2	7/2008	Eick et al.	
7,434,406	B2	10/2008	Herlihy et al.	
7,484,522	B2	2/2009	Eick et al.	
7,497,083	B2	3/2009	Yates et al.	
7,527,481	B2	5/2009	Baryshnikov et al.	
7,537,646	B2	5/2009	Chen et al.	
7,581,379	B2 *	9/2009	Yoshida et al.	60/39.463
7,610,760	B2	11/2009	Clements	
7,908,840	B2 *	3/2011	Schwarz et al.	60/39.08
7,984,606	B2 *	7/2011	Smith	60/266
8,196,408	B2 *	6/2012	Khosla et al.	60/734
2004/0011018	A1 *	1/2004	Bouiller et al.	60/39.08
2005/0084388	A1 *	4/2005	Hayes et al.	417/222.1
2005/0086971	A1 *	4/2005	Wells	62/324.2
2006/0081419	A1 *	4/2006	Care et al.	184/6.11
2009/0235631	A1 *	9/2009	Bocquet et al.	60/39.08
2009/0313999	A1 *	12/2009	Hunter et al.	60/772
2011/0023444	A1 *	2/2011	Veilleux, Jr.	60/39.08

* cited by examiner

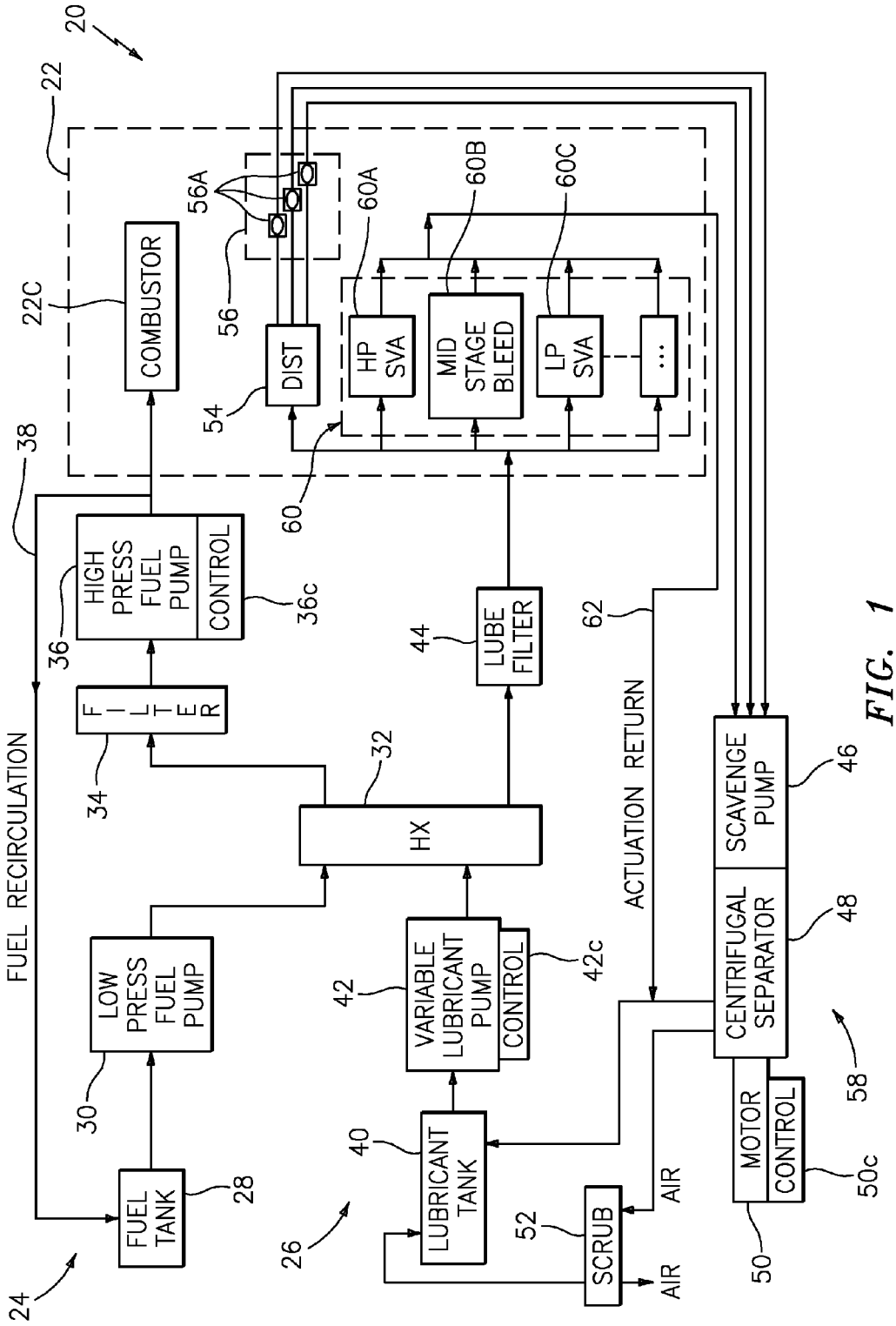
20
22
22C
COMBUSTOR
56A
56
DIST
54
60A
HP SVA
60B
MID STAGE BLEED
60C
LP SVA
...
60
38
HIGH PRESS FUEL PUMP
CONTROL
36
36c
FILTER
34
FUEL RECIRCULATION
LOW PRESS FUEL PUMP
30
FUEL TANK
28
24
32
HX
44
LUBE FILTER
42
VARIABLE LUBRICANT PUMP
CONTROL
42c
40
LUBRICANT TANK
26
52
SCRUB
AIR
AIR
62
ACTUATION RETURN
SCAVENGE PUMP
46
CENTRIFUGAL SEPARATOR
48
58
MOTOR
CONTROL
50c
50

FIG. 1

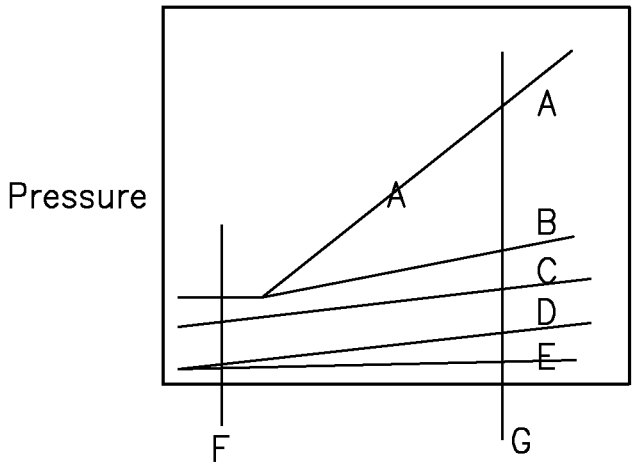

A) Typical Fuel Pressure up to 200–2000 PSIA
B) Typical Oil Supply 100 to 400 PSIA
C) Typical Fuel Low Pressure Sump 40–150 PSIA
D) Typical Oil Low Pressure Sump 6 PSIA to 20 PSIA
E) Typical Atmosphere 2 PSIA to 15 PSIA
F) Typical Actuator Sizing Point
G) Typical Actuator Load Limit/Structure Limits Point

FIG. 2

LUBRICATION DRIVEN GAS TURBINE ENGINE ACTUATION SYSTEM

BACKGROUND

The present disclosure relates to a gas turbine engine, and more particularly to a lubrication driven engine actuation system.

Gas turbine engines operate with a fuel system that typically supplies fuel for engine fuel burn and engine actuation operations. Engine fuel burn is the fuel supplied to the gas turbine engine combustor. Fuel for engine actuation is the fuel used as the working fluid to drive variable engine geometries through fuel powered actuators such as stator vane actuators, bleed valves and other hydromechanical systems. Such fuel powered actuation is often referred to as "fueldraulics."

SUMMARY

A lubrication system for a gas turbine engine according to an exemplary aspect of the present disclosure includes a variable output lubricant pump operable to supply lubricant to an actuator system.

A gas turbine engine according to an exemplary aspect of the present disclosure includes a lubricant system operable to supply lubricant to an actuator system and a lubricant distribution system and a fuel system operable to supply a burn flow to a combustor of the gas turbine engine.

A method of actuating variable engine geometries within a gas turbine engine according to an exemplary aspect of the present disclosure includes supplying lubricant to a gas turbine actuator system to provide variable engine geometries; and supplying fuel as a burn flow only.

BRIEF DESCRIPTION OF THE DRAWINGS

Various features will become apparent to those skilled in the art from the following detailed description of the disclosed non-limiting embodiment. The drawings that accompany the detailed description can be briefly described as follows:

FIG. **1** is a general schematic view of gas turbine engine system embodiment for use with the present disclosure; and

FIG. **2** is a graphical representation of actuator pressures for a fuel system and lubrication system driven actuators.

DETAILED DESCRIPTION

FIG. **1** schematically illustrates a gas turbine engine system **20** which includes a gas turbine engine **22** in fluid communication with a fuel system **24** and a lubrication system **26**. While a gas turbine engine system **20** typically utilized for aircraft propulsion is schematically illustrated in the disclosed non-limiting embodiment, it should be understood that the disclosure is applicable to other gas turbine engine configurations, vehicles and gas turbines for power generation.

The fuel system **24** generally includes a fuel tank **28**, low pressure fuel pump **30**, a heat exchanger **32**, a filter system **34**, a high pressure fuel pump **36** and control **36***c* which supplies a burn flow of fuel to a combustor **22**C of the gas turbine engine **22**. Although particular components are illustrated in the disclosed, non-limiting embodiment it should be understood other fuel system components may alternatively or additionally be provided.

The fuel system **24** supplies fuel typically in quantities that are in excess of that required to fuel the gas turbine engine **22** such that excess fuel is recirculated through line **38**. Even with recirculation, the fuel system **24** need only provides fuel quantities to accommodate the fuel burn operation, as the lubrication system **26** provides hydraulic power for engine actuation operations. The size and minimum pressure of the pumps **30**, **36** are thereby readily reduced over fueldraulic systems. Typically, an approximate 20% reduction in fuel pump size may be achieved for mid thrust engines and the minimum fuel pressures may be reduced with the elimination of fueldraulic engine actuation requirements which will save power at cruise. The relatively smaller fuel pump sizing at windmill relight also reduces fuel waste.

The lubrication system **26** generally includes a lubricant tank **40**, a variable output lubricant pump **42**, the heat exchanger **32**, a filter system **44**, a scavenge pump **46**, a centrifugal air/lubricant separator **48** driven by a motor **50** and an optional scrubber system **52**. The heat exchanger **32** may be an air or fuel cooled system and may alternatively or additionally include a multiple of heat exchangers in a distributed arrangement. Although particular components are illustrated in the disclosed, non-limiting embodiment it should be understood other lubrication system components may alternatively or additionally be provided.

The lubrication system **26** supplies lubricant to a lubricant distribution system **54** which communicates lubricant to engine components **56** such as bearing components **56**A, **56**B, **56**C. It should be understood that other components may alternatively or additionally receive lubricant from the lubricant distribution system **54**. From the components **56**, the lubricant is scavenged within a scavenge system **58** by the scavenge pump **46**.

The centrifugal air/lubricant separator **48** is selectively driven by the motor **50** to remove air from the scavenged lubricant. The motor **50** is controlled to drive the centrifugal air/lubricant separator **48** to optimize air separation such that the lubricant tank **40** may be of a relatively small size as compared to conventional lubricant tanks which may be relatively larger to permit increased residence time for the lubricant to settle and allow air to escape from the lubricant.

The centrifugal air/lubricant separator **48** separates lubricant from the air and returns the lubricant to the lubrication tank **40** and dumps the air overboard. The scrubber system **52** may additionally be utilized to scrub the overboard air for any residual lubricant.

The lubrication system **26** selectively supplies lubricant to an actuator system **60** which includes a multiple of actuators such as a high pressure stator vane actuator **60**A, a mid stage bleed actuator **60**B, low pressure stator vane actuator **60**C and others. It should be understood that other actuators, variable geometry and fluid driven systems may alternatively or additionally be driven by the lubricant system **26**.

The variable output lubricant pump **42** utilizes a control **42***c* to optimize lubricant communication efficiency to assure adequate pressure is provided dependent on, for example, the number or actuators which are in operation. That is, the variable output lubricant pump **42** may operate in response to the control **42***c* at one speed to supply a desired lubricant output to the lubricant distribution system **54** and may operate at a second higher speed to supply the desired lubricant output to the lubricant distribution system **54** as well as supply the actuator system **60**. The variable output lubricant pump **42** may alternatively be gearbox driven so speed is a function of engine speed and variable output is set by pump displacement or may be a variable speed electric type.

The controllers **36***c*, **42***c*, **50***c* control the respective high pressure fuel pump **36**, variable output lubricant pump **42** and motor **50**. The controllers **36***c*, **42***c*, **50***c* may be utilized to assure a minimum output pressure to satisfy both oil lubrica-

tion and actuation needs. It should be understood by those skilled in the art with the benefit of this disclosure that these functions may be enacted in either dedicated hardware circuitry or programmed software routines capable of execution in a microprocessor based electronics control embodiment. In one non-limiting embodiment, the controllers **36***c*, **42***c*, **50***c* may be a portion of a flight control computer, a portion of a central vehicle control, an interactive vehicle dynamics module, a stand-alone line replaceable unit or other system to include a single higher level controller.

Actuation return lubricant from the actuator system **60** can be returned through return line **62** upstream of the variable output lubricant pump **42**. Alternatively, the return lubricant from the actuator system **60** may be returned to the lubricant tank **40**.

Typical fuel supply pressures vary between approximately 200 to 2000 PSIA (1378951 to 13789514 Pa) while typical lubricant supply pressures vary between approximately 100 to 400 PSIA (2757902 to 27579029 Pa) (FIG. **2**). When driven by the lubrication system **26**, the actuator system **60** need only be designed for the lower pressures and lower range of pressures which advantageously improves actuator force balance, maximum output limits, structural wall size and material combinations. The reduction in minimum to maximum pressure range provided by the lubrication system **26** provides a relatively close match between ambient actuator pressure and lubricant sump pressure which facilitates a reduced actuator size, lighter actuator design, or combination thereof.

The lubrication system **26** driven actuator system **60** further permits relatively lighter weight actuators manufactured from materials such as aluminum and composites, as the actuator system **60** operates at lower pressures and are not subject to significant waste power at maximum pressure operations such as takeoff. That is, the lower pressure of the lubrication system **26** does not require pressure toping features typically required with fueldraulics to prevent high output loads at maximum fuel flow conditions. Also, potential transient shortfalls are more readily absorbed by the lubrication system **26** as compared to the fuel system **24** which facilities transient sizing optimization.

It should be understood that like reference numerals identify corresponding or similar elements throughout the several drawings. It should also be understood that although a particular component arrangement is disclosed in the illustrated embodiment, other arrangements will benefit herefrom.

Although particular step sequences are shown, described, and claimed, it should be understood that steps may be performed in any order, separated or combined unless otherwise indicated and will still benefit from the present disclosure.

The foregoing description is exemplary rather than defined by the limitations within. Various non-limiting embodiments are disclosed herein, however, one of ordinary skill in the art would recognize that various modifications and variations in light of the above teachings will fall within the scope of the appended claims. It is therefore to be understood that within the scope of the appended claims, the disclosure may be practiced other than as specifically described. For that reason the appended claims should be studied to determine true scope and content.

What is claimed is:

1. A lubrication system for a gas turbine engine comprising:

an actuator system;

a variable output lubricant pump operable to supply lubricant to said actuator system, said variable output lubricant pump is operable to supply lubricant to a lubricant distribution system and gas turbine engine bearing components of the lubricant distribution system; and

a scavenge system in fluid communication with said lubricant distribution system, said scavenge system includes a centrifugal air/lubricant separator selectively driven by a motor, said motor is operated to minimize a residence time within a lubricant tank downstream of said centrifugal air/lubricant separator.

2. The lubrication system as recited in claim **1**, wherein said actuator system provides variable engine geometries.

3. The lubrication system as recited in claim **1**, wherein said actuator system includes a stator vane actuator.

4. The lubrication system of claim **1**, wherein the scavenge system further includes a scavenge pump, the scavenge pump being driven by the motor.

5. A gas turbine engine system comprising:

a gas turbine engine;

a lubricant distribution system for said gas turbine engine;

an actuator system for said gas turbine engine to provide variable engine geometries;

a lubricant system operable to supply lubricant to said actuator system and said lubricant distribution system;

a fuel system operable to supply a burn flow to a combustor of said gas turbine engine, said fuel system is operable to supply only said burn flow; and

a scavenge system in fluid communication with said lubricant distribution system, said scavenge system includes a centrifugal air/lubricant separator selectively driven by a motor operated to minimize a residence time within a lubricant tank downstream of said centrifugal air/lubricant separator.

6. The gas turbine engine system as recited in claim **5**, wherein said actuator system includes an actuation return which communicates lubricant from downstream of said actuation system to upstream of a variable output lubricant pump of said lubricant system.

7. The gas turbine engine system as recited in claim **6**, wherein said actuator system comprises a stator vane actuator.

8. The gas turbine engine system as recited in claim **5**, further comprising a scavenge pump driven by the motor.

* * * * *