US009314676B2

(12) **United States Patent**
Cole et al.

(10) **Patent No.: US 9,314,676 B2**
(45) **Date of Patent: Apr. 19, 2016**

(54) **GOLF CLUB HEADS WITH RIBS AND RELATED METHODS**

(71) Applicant: **KARSTEN MANUFACTUIRNG CORPORATION**, Phoenix, AZ (US)

(72) Inventors: **Eric V. Cole**, Phoenix, AZ (US); **Martin R. Jertson**, Phoenix, AZ (US)

(73) Assignee: **Karsten Manufacutring Corporation**, Phoenix, AZ (US)

(*) Notice: Subject to any disclaimer, the term of this patent is extended or adjusted under 35 U.S.C. 154(b) by 250 days.

(21) Appl. No.: **14/044,459**

(22) Filed: **Oct. 2, 2013**

(65) **Prior Publication Data**

US 2015/0094165 A1 Apr. 2, 2015

(51) **Int. Cl.**
A63B 53/04 (2015.01)

(52) **U.S. Cl.**
CPC ***A63B 53/0466*** (2013.01); *A63B 2053/045* (2013.01); *A63B 2053/0408* (2013.01); *A63B 2053/0433* (2013.01); *A63B 2053/0437* (2013.01); *A63B 2060/002* (2015.10)

(58) **Field of Classification Search**
USPC 473/324–350
See application file for complete search history.

(56) **References Cited**

U.S. PATENT DOCUMENTS

4,214,754	A	7/1980	Zebelean
4,432,549	A	2/1984	Zebelean
4,681,321	A	7/1987	Chen et al.
5,067,715	A	11/1991	Schmidt et al.
5,180,166	A	1/1993	Schmidt et al.
5,213,328	A	5/1993	Long et al.
5,351,958	A	10/1994	Helmstetter
5,419,559	A	5/1995	Melanson et al.
6,059,669	A	5/2000	Pearce
6,595,871	B2	7/2003	Sano
6,645,087	B2	11/2003	Yabu
6,783,465	B2	8/2004	Matsunaga
6,852,038	B2	2/2005	Yabu
7,250,007	B2	7/2007	Lu
7,273,423	B2	9/2007	Imamoto
7,396,298	B2	7/2008	Jertson et al.
7,507,168	B2	3/2009	Chou et al.
7,563,177	B2	7/2009	Jertson et al.
7,749,104	B2	7/2010	Brekke et al.
7,806,781	B2	10/2010	Imamoto
7,828,676	B2	11/2010	Wada et al.
7,874,935	B2	1/2011	Jertson et al.
7,887,433	B2	2/2011	Hoffman et al.
8,206,242	B2	6/2012	Jertson et al.
8,414,421	B2	4/2013	Jertson et al.
8,425,347	B2	4/2013	Jertson et al.
8,523,704	B2	9/2013	Jertson et al.
2002/0065147	A1	5/2002	Sano

(Continued)

FOREIGN PATENT DOCUMENTS

CA	2 471 397 A1	12/2005
CN	2636914 Y	9/2004
EP	1 757 335 A1	2/2007
GB	2417909	3/2006
GB	2440511 A	2/2008
JP	04327864 A	11/1992

(Continued)

Primary Examiner — John E Simms, Jr.

(57) **ABSTRACT**

A golf club head including a first rib protruding from a rib surface of the body. The first rib comprises a first and second rib end and a first, second, and third rib portion. The third rib portion is located between the first rib portion and the second rib portion. The first, second and third rib portions include a first, second and third rib portion dimension, where the first and second rib portion dimensions are greater than the third rib portion dimension.

21 Claims, 28 Drawing Sheets

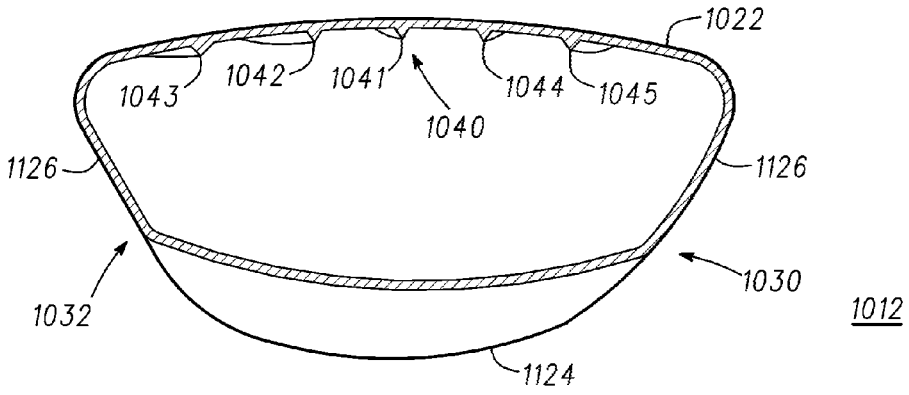

(56) **References Cited**

U.S. PATENT DOCUMENTS

2002/0072434	A1	6/2002	Yabu
2003/0104878	A1	6/2003	Yabu
2003/0114244	A1	6/2003	Matsunaga
2004/0266551	A1	12/2004	Noguchi et al.
2005/0049081	A1	3/2005	Boone
2005/0221913	A1	10/2005	Kusumoto
2006/0052181	A1	3/2006	Serrano et al.
2008/0070721	A1	3/2008	Chen et al.
2010/0029408	A1	2/2010	Abe
2013/0157777	A1	6/2013	Stokke et al.

FOREIGN PATENT DOCUMENTS

JP	09154984	A	6/1997
JP	2001095957	A	4/2001
JP	2001353240	A	12/2001
JP	2002126136	A	5/2002
JP	2002239641	A	8/2002
JP	2003159354	A	6/2003
JP	2005073736	A	3/2005
JP	2005137788	A	6/2005
JP	2005237948	A	9/2005
JP	2005287529	A	10/2005
JP	2005312942	A	11/2005

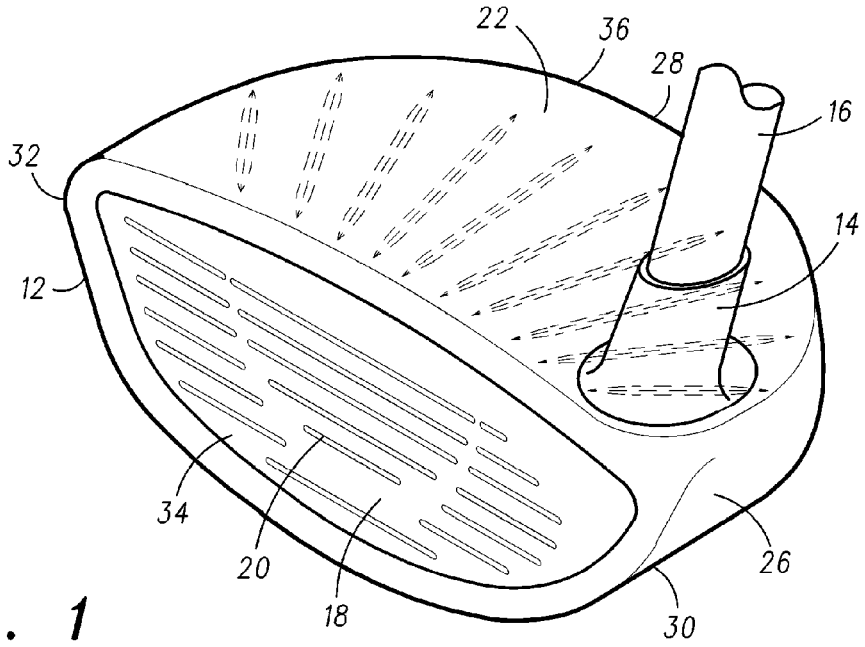

FIG. 1

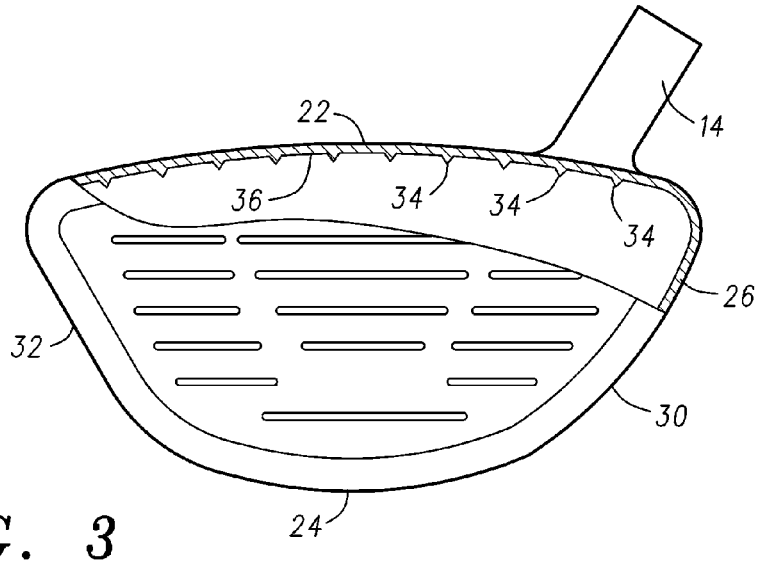

FIG. 3

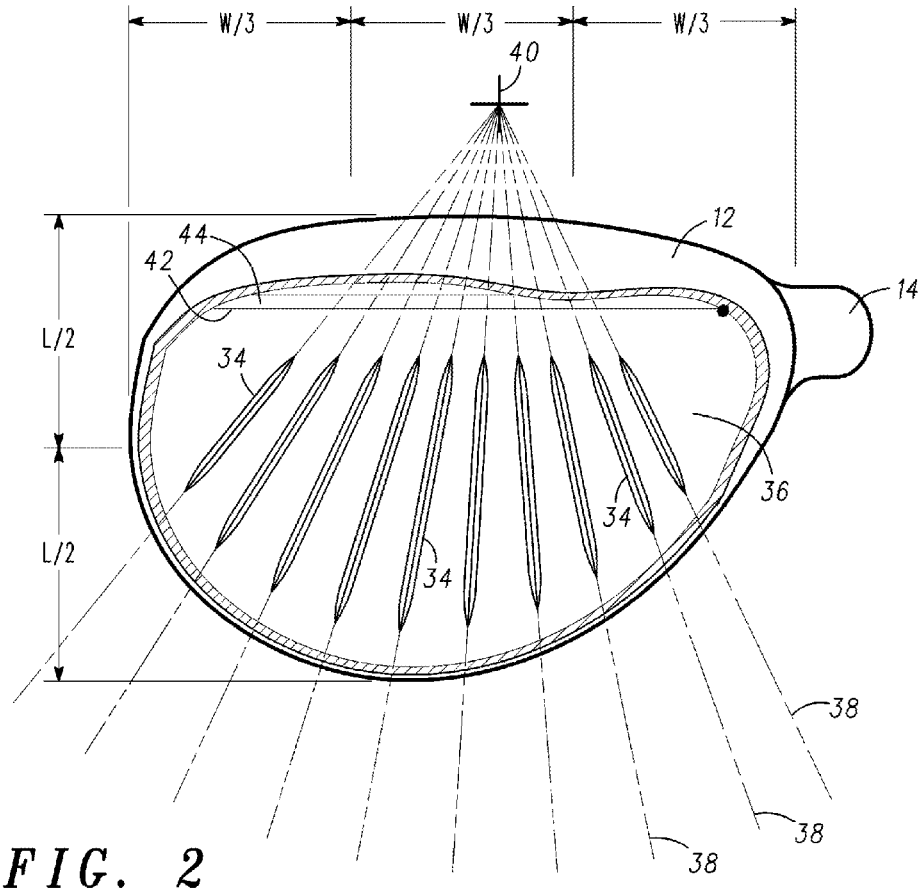

FIG. 2

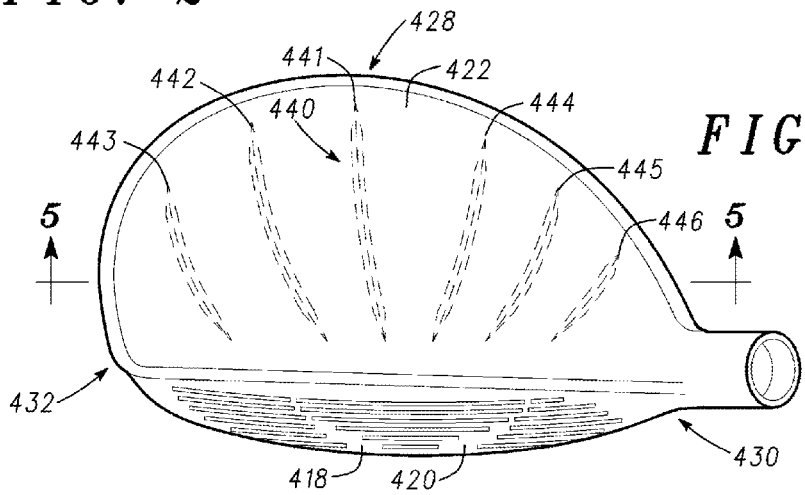

FIG. 4

412

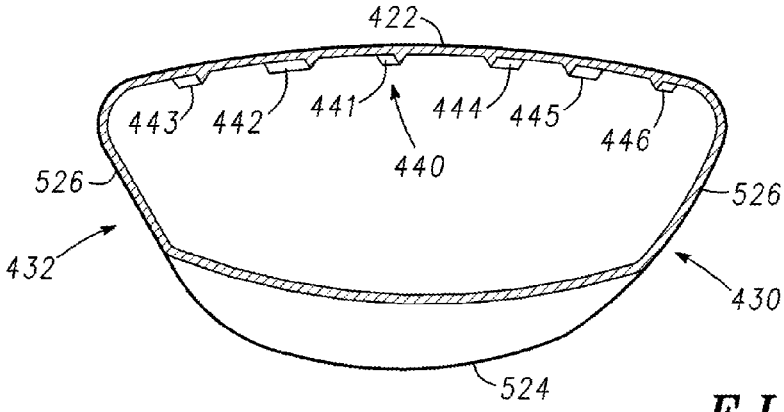
422
443
442
441
444
445
446
440
526
526
432
430
524
412

FIG. 5

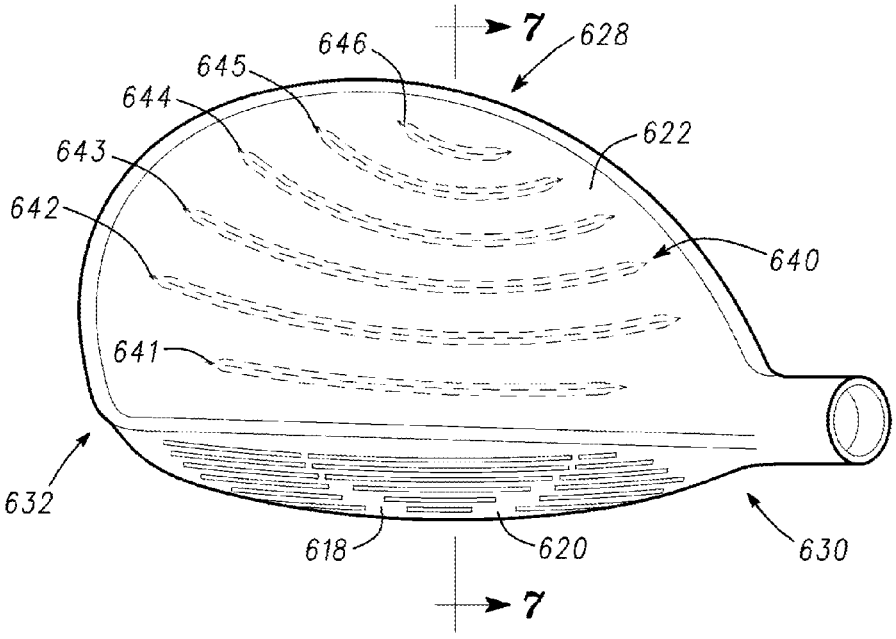
7
628
646
645
644
643
642
622
640
641
632
618
620
630
7
612

FIG. 6

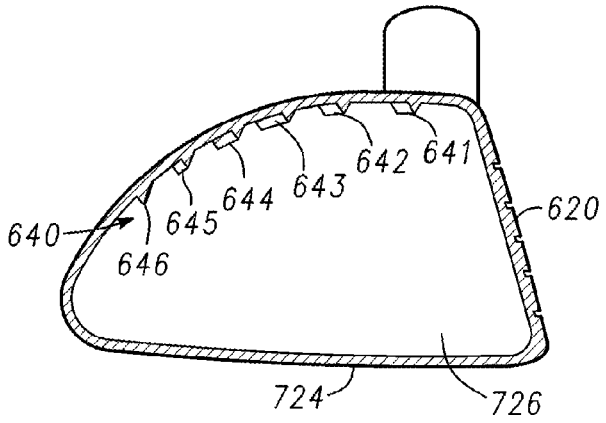
640
646
645
644
643
642
641
620
724
726
612

FIG. 7

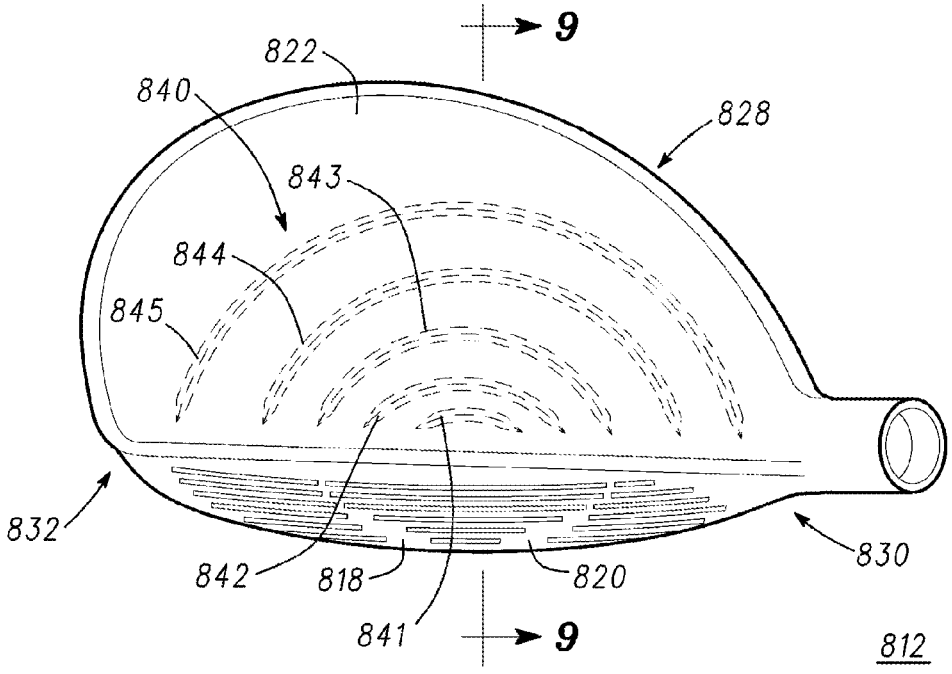
9
822
840
828
843
844
845
832
842
818
820
830
841
9
812

FIG. 8

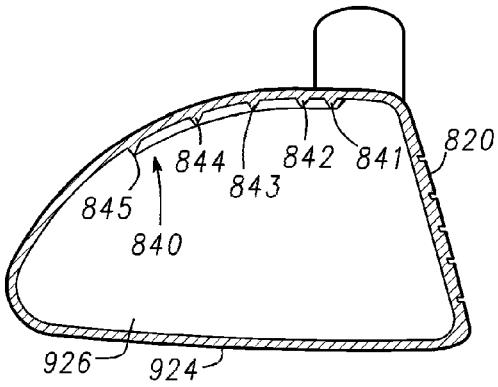
820
844
842
841
843
845
840
926
924
812

FIG. 9

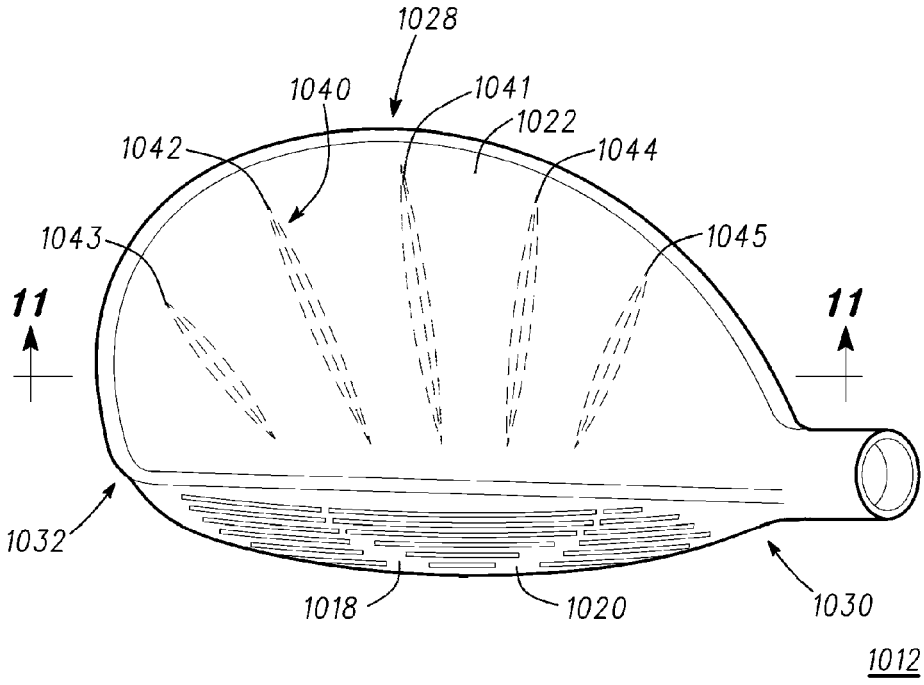
1028
1040
1041
1022
1042
1044
1043
1045
11
11
1032
1018
1020
1030
1012

FIG. 10

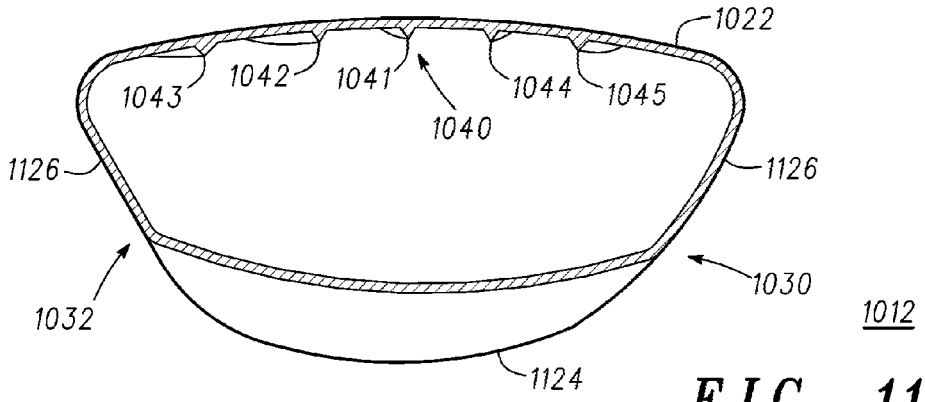
1022
1043
1042
1041
1040
1044
1045
1126
1126
1030
1032
1012
1124

FIG. 11

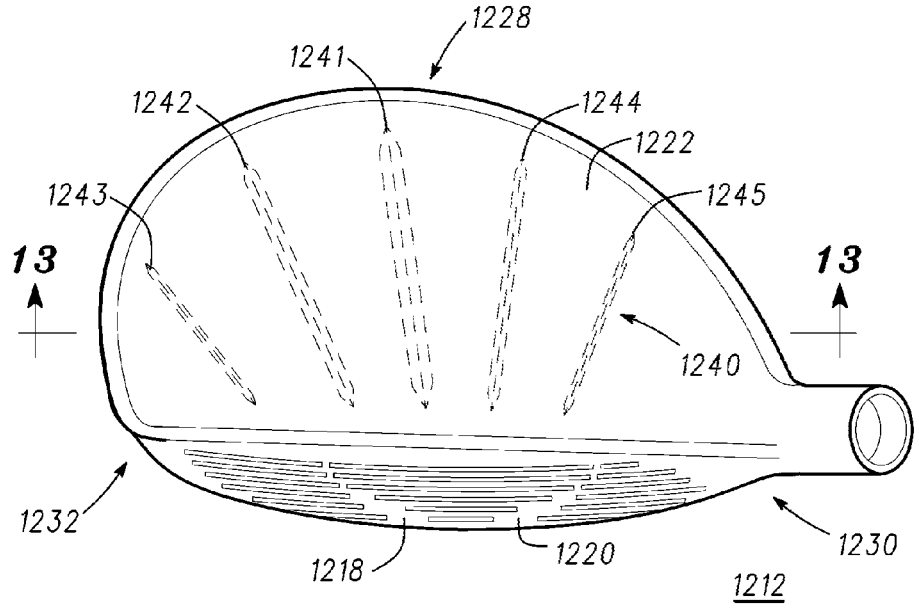
1228
1241
1242
1244
1222
1243
1245
13
13
1240
1232
1230
1218
1220
1212

FIG. 12

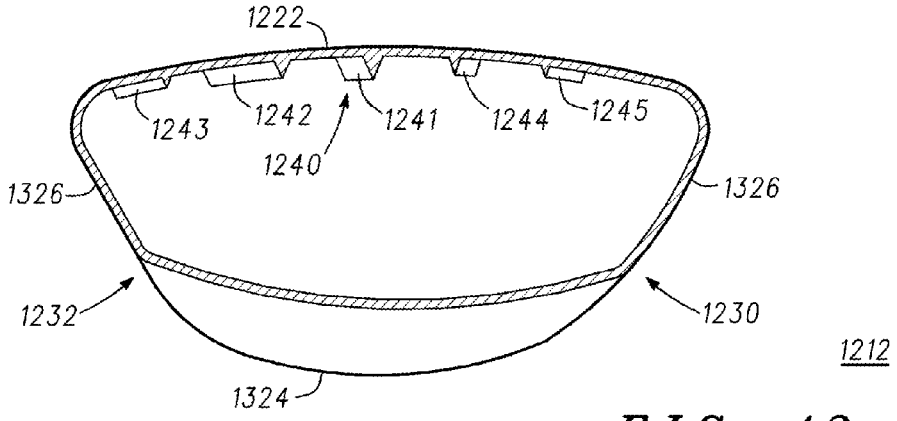
1222
1243
1242
1241
1244
1245
1240
1326
1326
1232
1230
1324
1212

FIG. 13

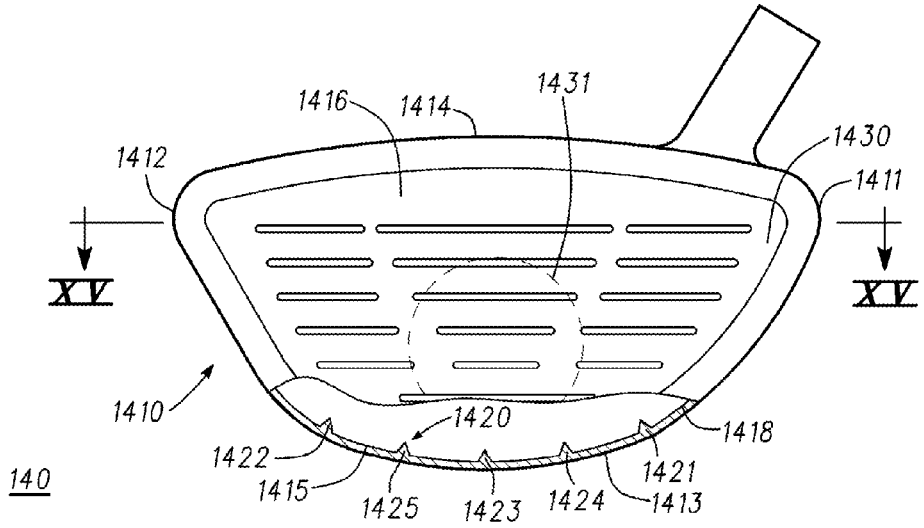
1416
1414
1431
1412
1430
1411
XV
XV
1410
1420
1418
1422
1415
1425
1423
1424
1421
1413
140

FIG. 14

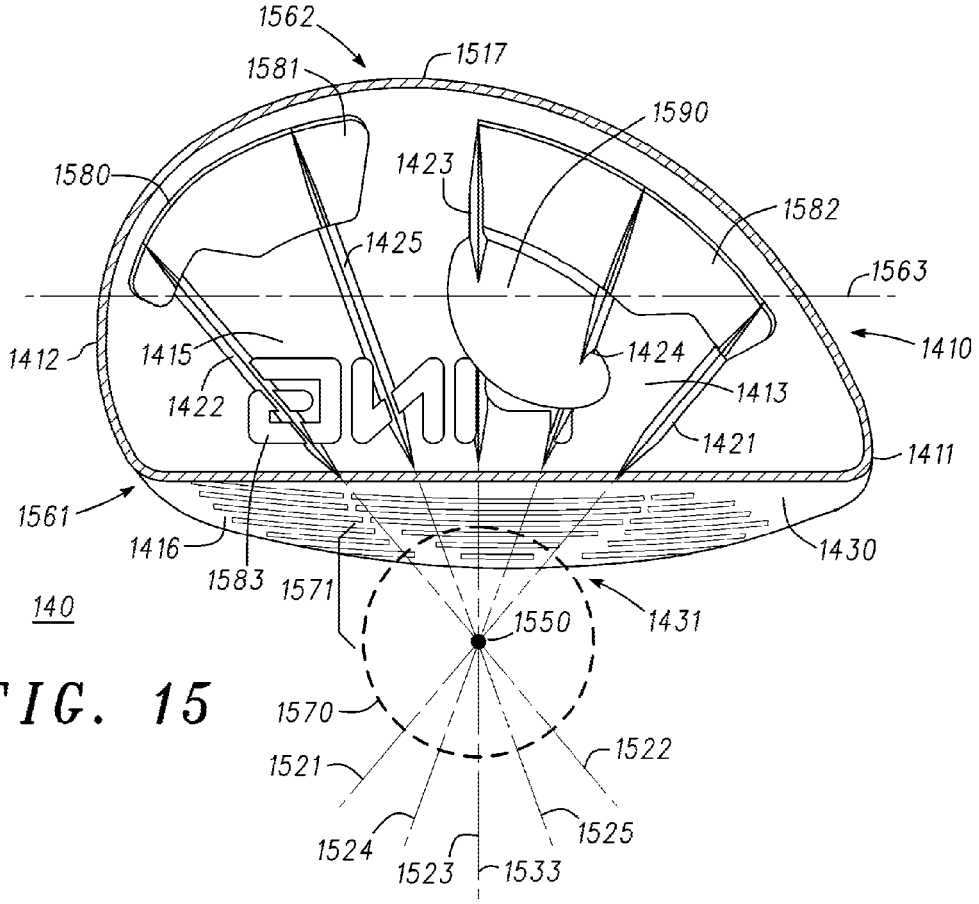
1562
1581
1517
1590
1580
1423
1582
1425
1563
1412
1415
1424
1410
1422
1413
1421
1411
1561
1416
1583
1571
1430
140
1550
1431
1570
1521
1522
1524
1525
1523
1533

FIG. 15

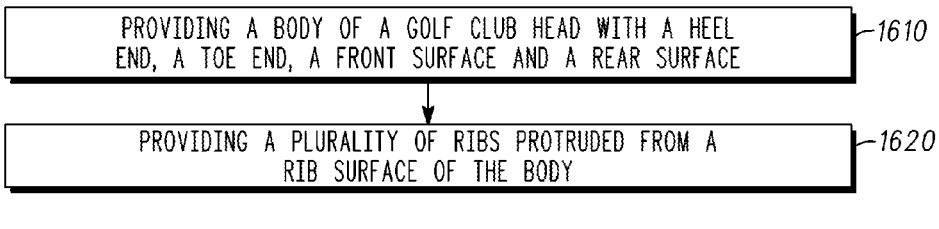
PROVIDING A BODY OF A GOLF CLUB HEAD WITH A HEEL END, A TOE END, A FRONT SURFACE AND A REAR SURFACE
1610
PROVIDING A PLURALITY OF RIBS PROTRUDED FROM A RIB SURFACE OF THE BODY
1620
1600

FIG. 16

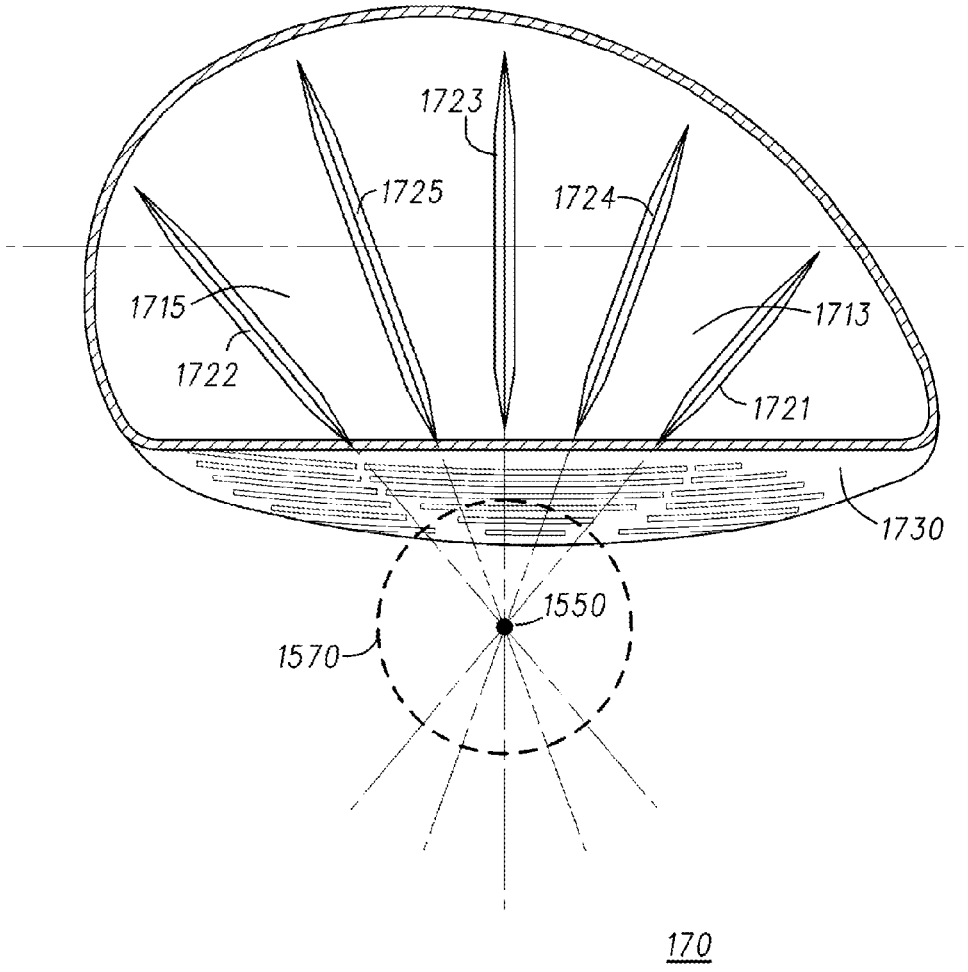

FIG. 17

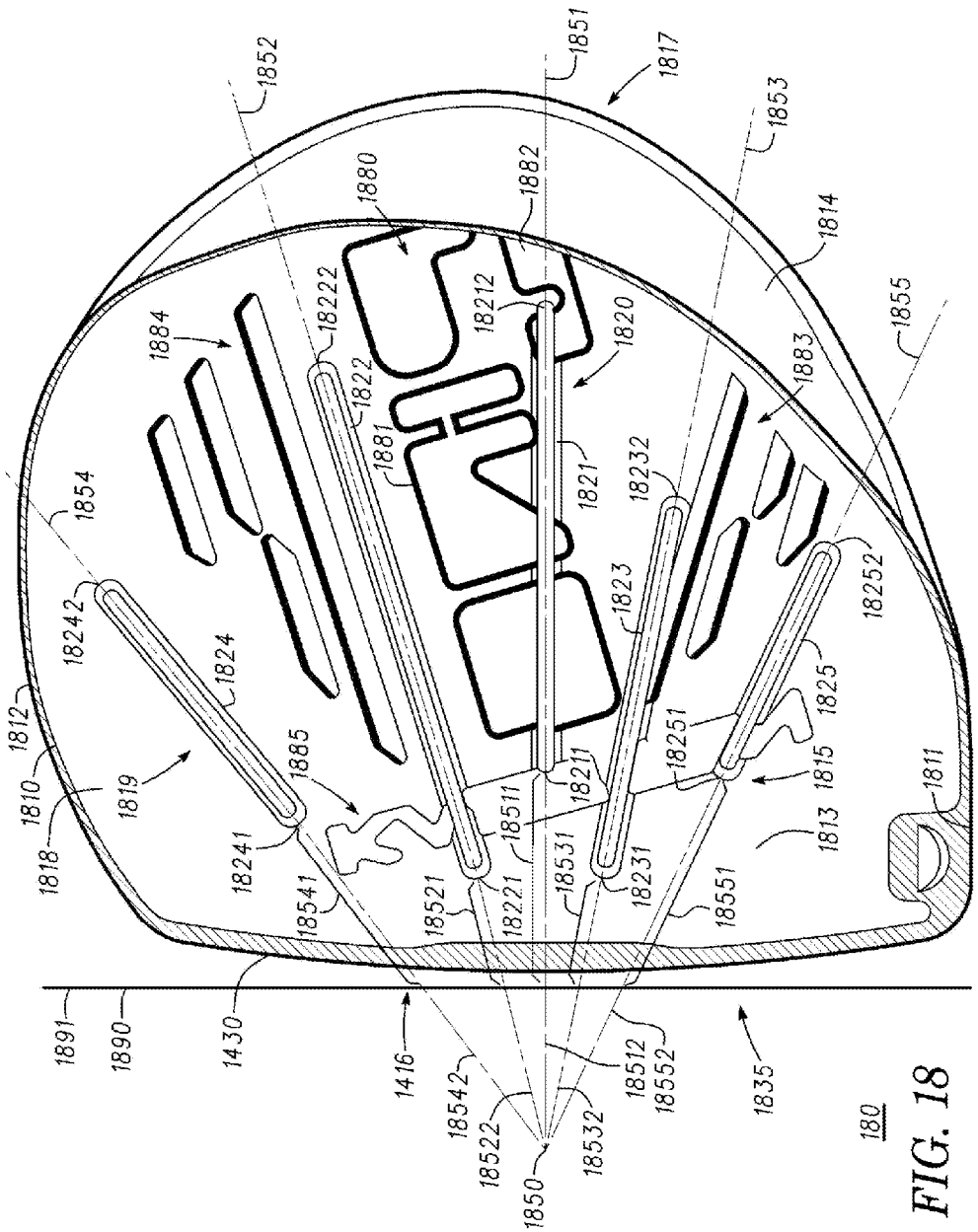
1852
1851
1817
1853
1880
1882
1814
1884
18222
18212
1820
1855
1822
1883
1881
1821
18232
1854
18242
1823
18252
1824
1825
1812
1885
18251
1810
1819
1815
1811
18241
18511
18211
1813
1818
18531
18231
18541
18521
18221
18551
1891
1890
1430
1416
18542
18512
18552
1835
18522
18532
1850
180

FIG. 18

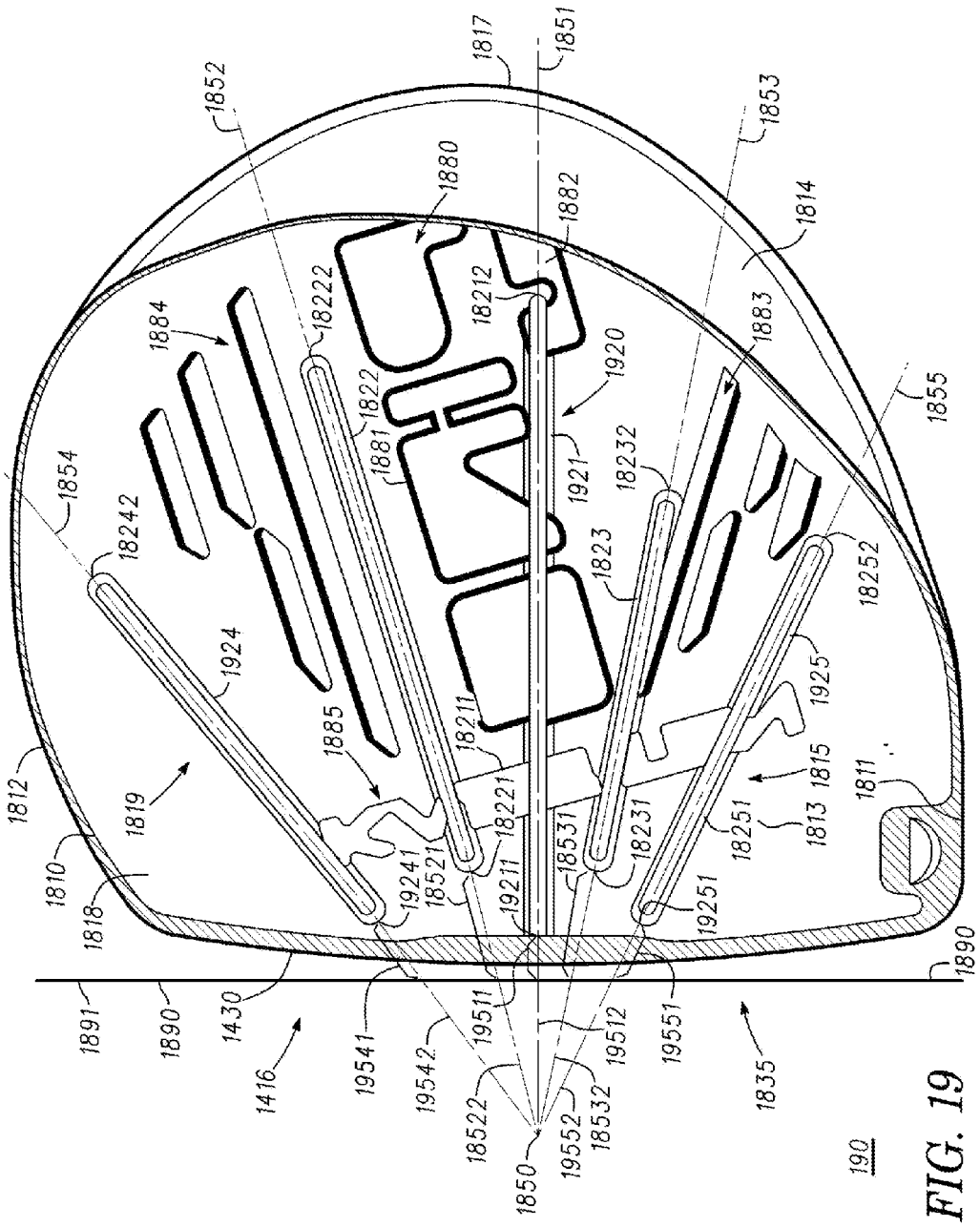
1817
1851
1852
1853
1880
1882
1814
1884
18222
18212
1883
1920
1822
1881
1855
1854
18242
1921
18232
1823
18252
1924
1925
1885
18211
1815
1812
1819
18221
18531
18231
18251
1813
1811
1810
19241
18521
19211
19251
1818
1890
1891
1890
1430
19511
19512
19551
1416
19541
19542
1835
18522
19552
18532
1850
190

FIG. 19

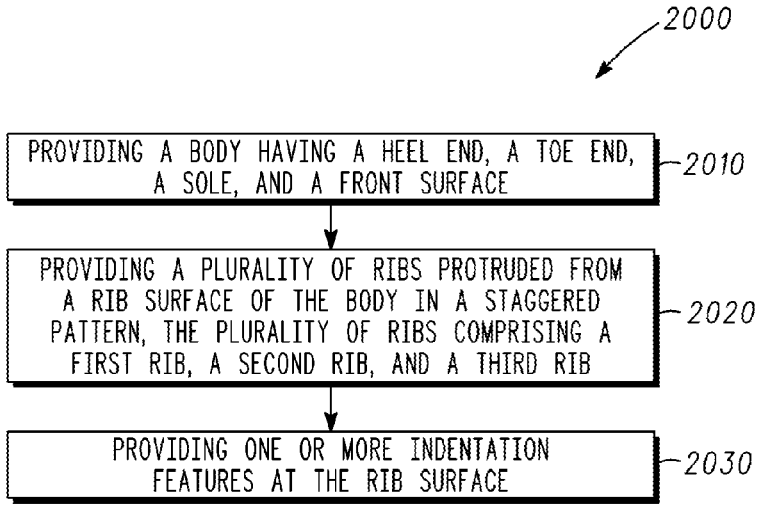
2000
PROVIDING A BODY HAVING A HEEL END, A TOE END, A SOLE, AND A FRONT SURFACE
2010
PROVIDING A PLURALITY OF RIBS PROTRUDED FROM A RIB SURFACE OF THE BODY IN A STAGGERED PATTERN, THE PLURALITY OF RIBS COMPRISING A FIRST RIB, A SECOND RIB, AND A THIRD RIB
2020
PROVIDING ONE OR MORE INDENTATION FEATURES AT THE RIB SURFACE
2030

FIG. 20

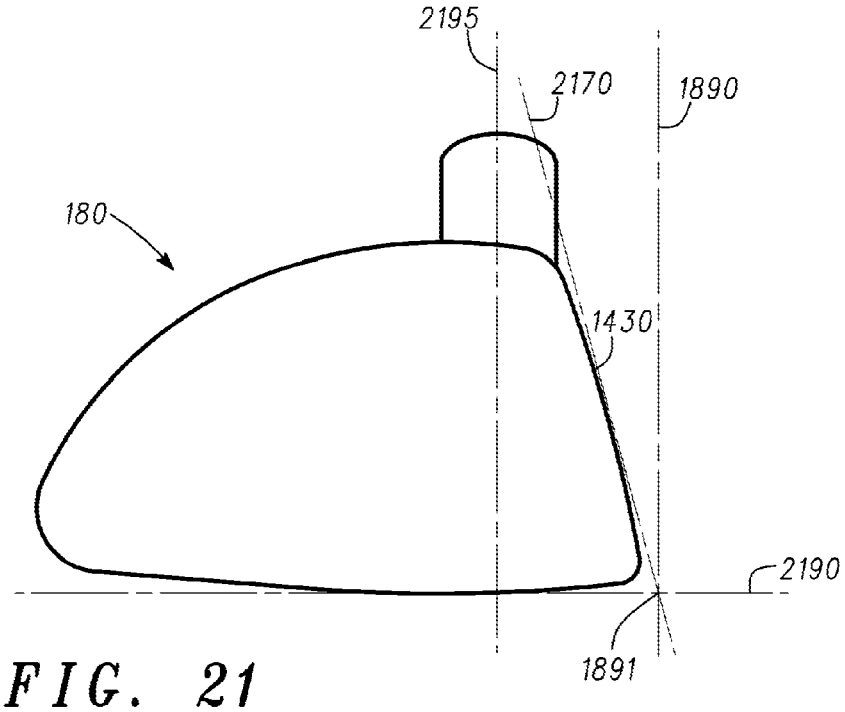
2195
2170
1890
180
1430
2190
1891

FIG. 21

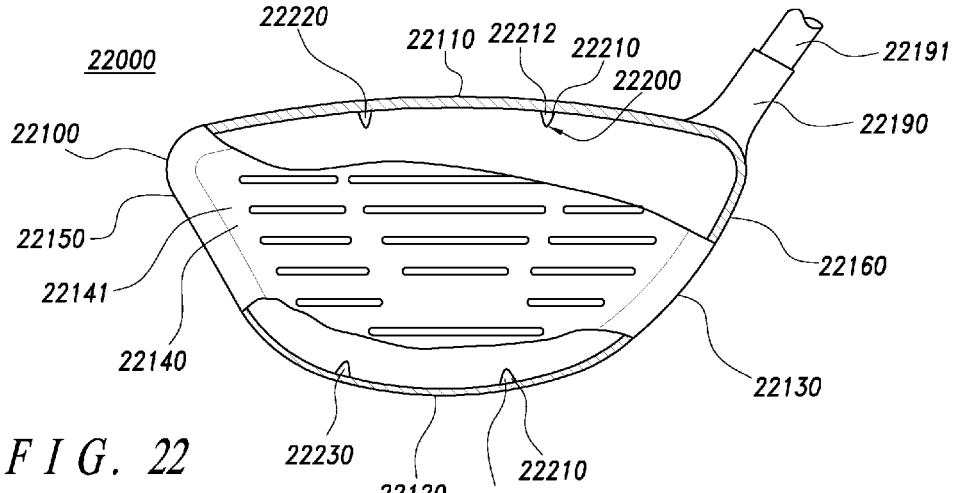
22000
22220
22110
22212
22210
22200
22191
22190
22100
22150
22141
22140
22160
22130
22230
22120
22211
22210

FIG. 22

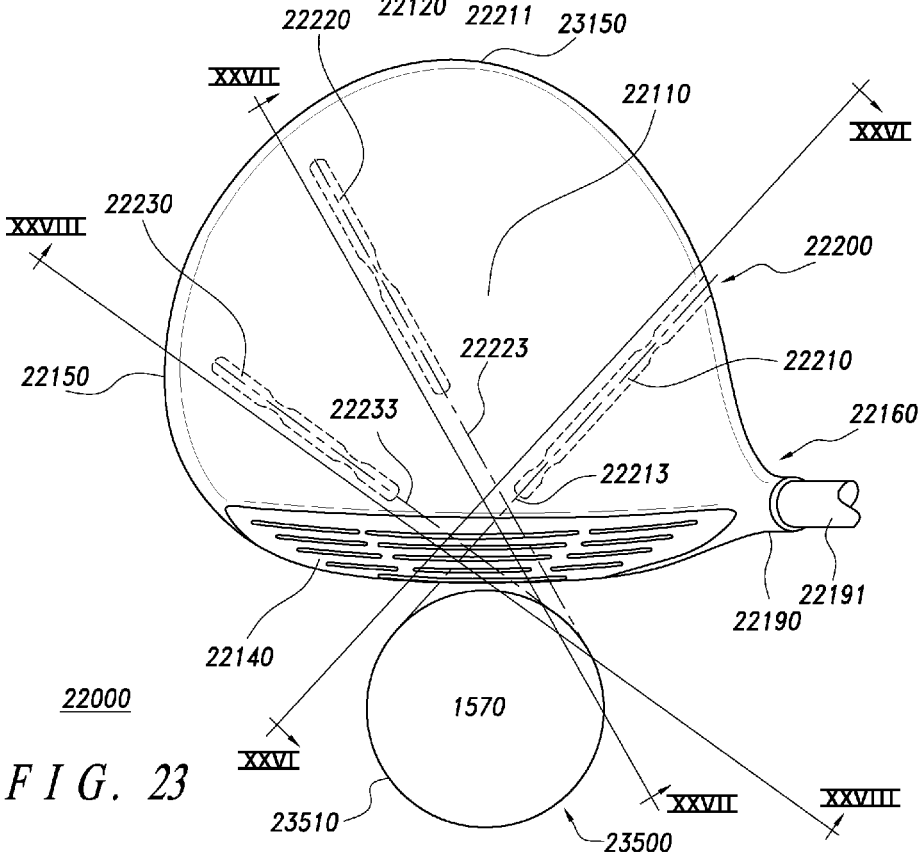
22220
23150
XXVII
22110
XXVI
22230
XXVIII
22200
22223
22150
22210
22233
22160
22213
22191
22190
22140
22000
1570
XXVI
XXVII
XXVIII
23510
23500

FIG. 23

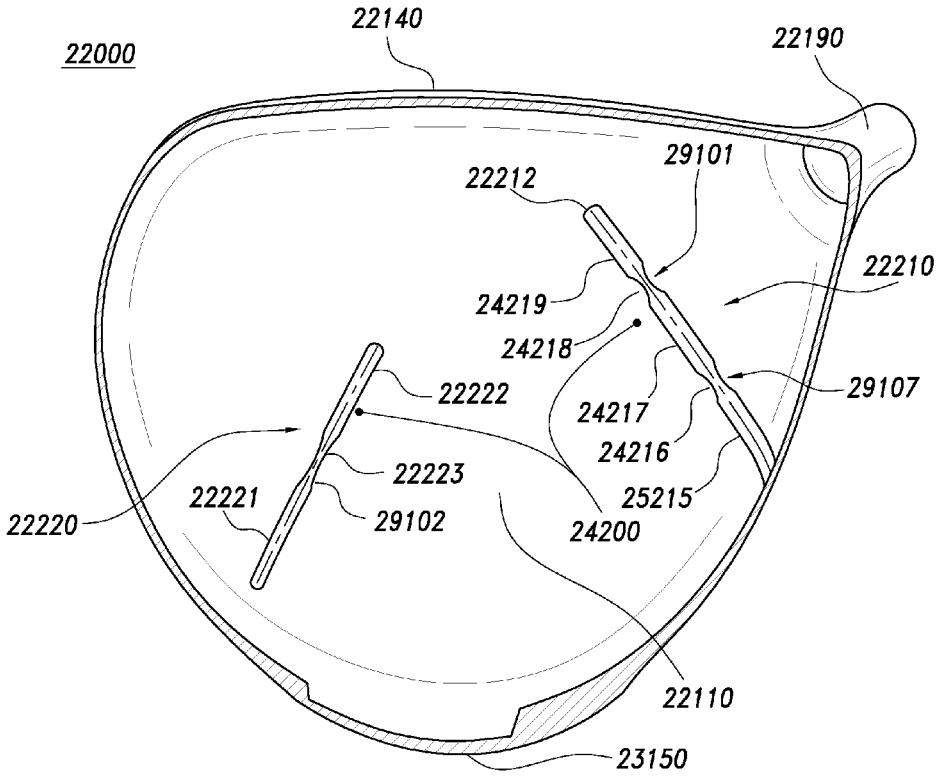
22000
22140
22190
29101
22212
22210
24219
24218
29107
22222
24217
24216
22223
25215
22221
29102
24200
22220
22110
23150

FIG. 24

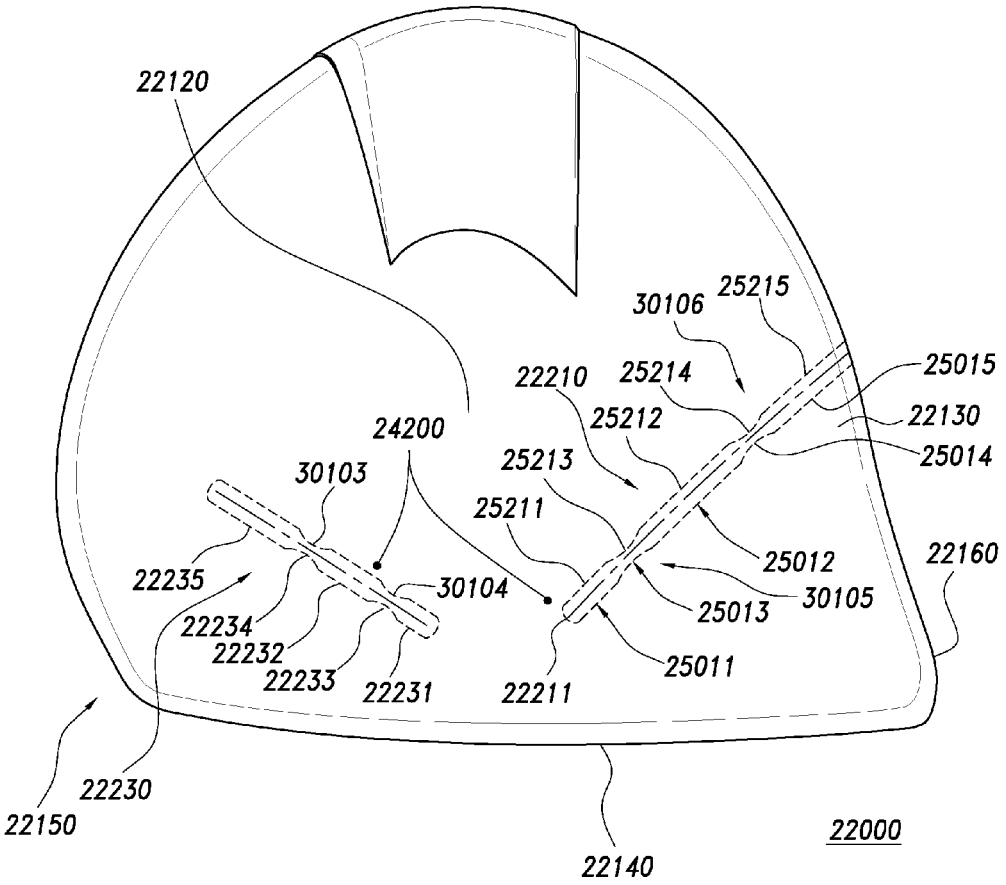
22120
30106
25215
25015
22210
25214
22130
25212
24200
25014
25213
30103
25211
22160
25012
22235
30104
30105
25013
22234
22232
25011
22233
22231
22211
22230
22150
22140
22000

FIG. 25

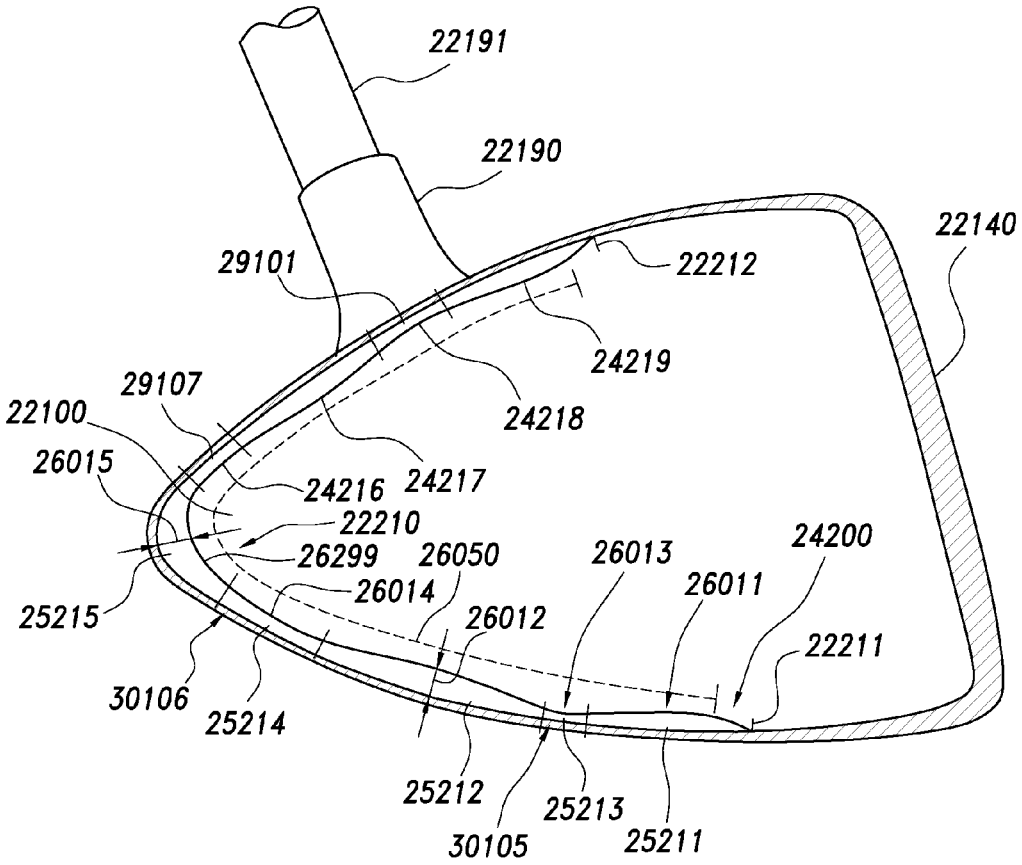
22191
22190
22140
29101
22212
24219
24218
29107
22100
26015
24216
24217
22210
26299
26050
26013
24200
26011
26014
26012
22211
25215
30106
25214
25212
25213
25211
30105

FIG. 26

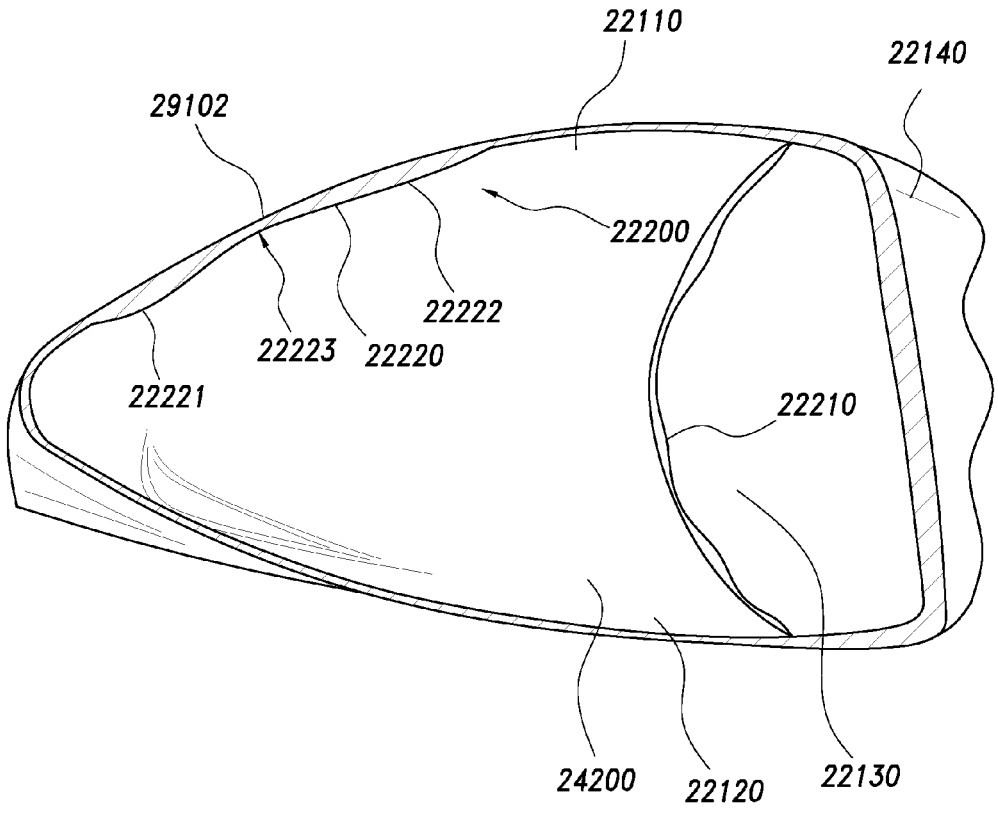
22110
22140
29102
22200
22222
22223
22220
22221
22210
24200
22120
22130

FIG. 27

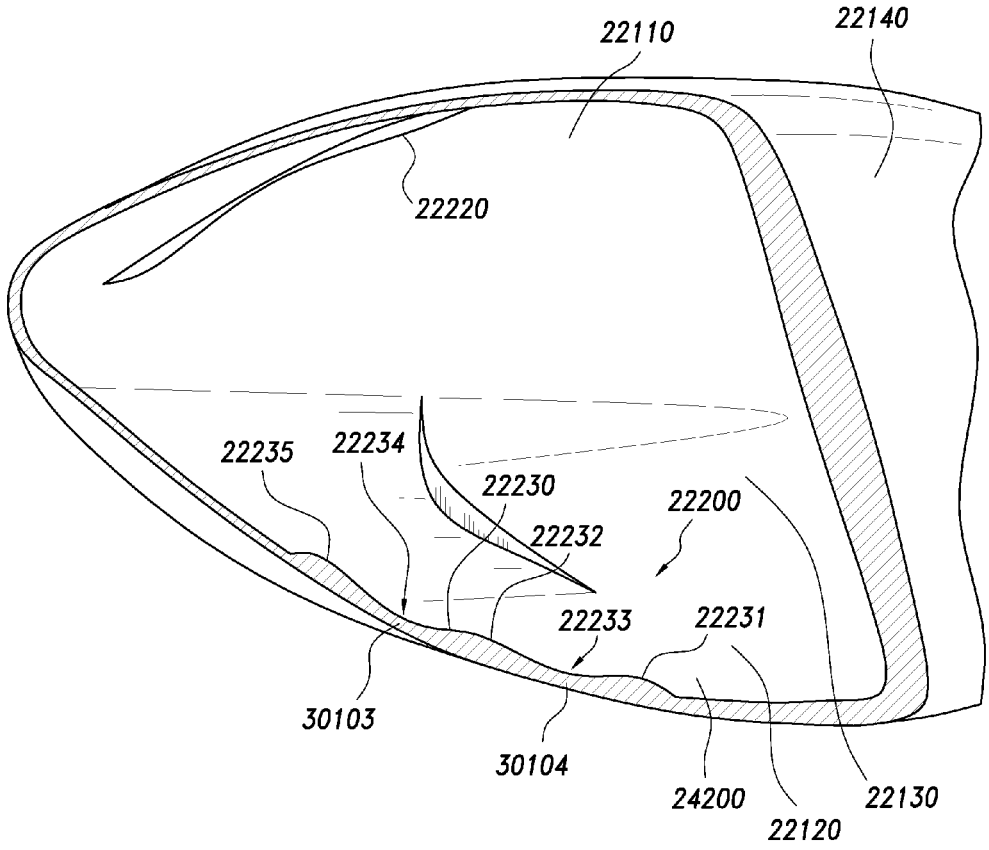
22110
22140
22220
22235
22234
22230
22200
22232
22233
22231
30103
30104
24200
22120
22130

FIG. 28

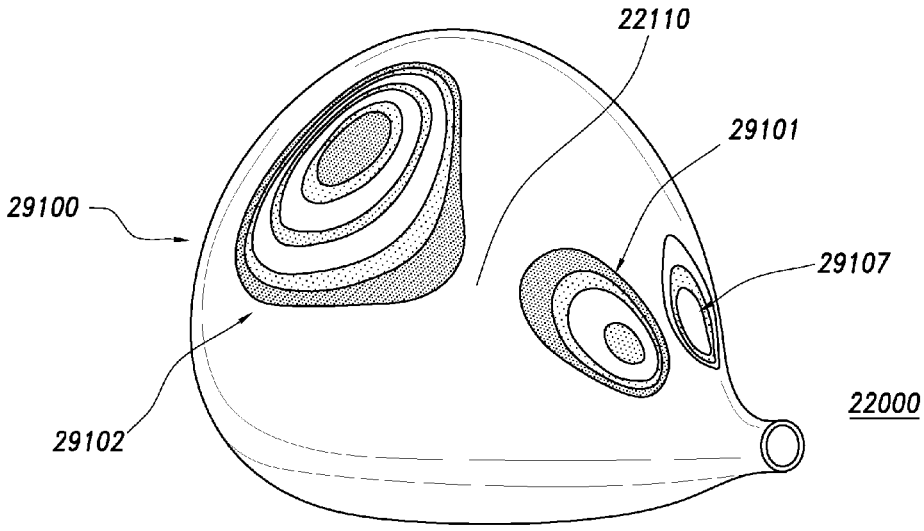
22110
29101
29100
29107
22000
29102

FIG. 29

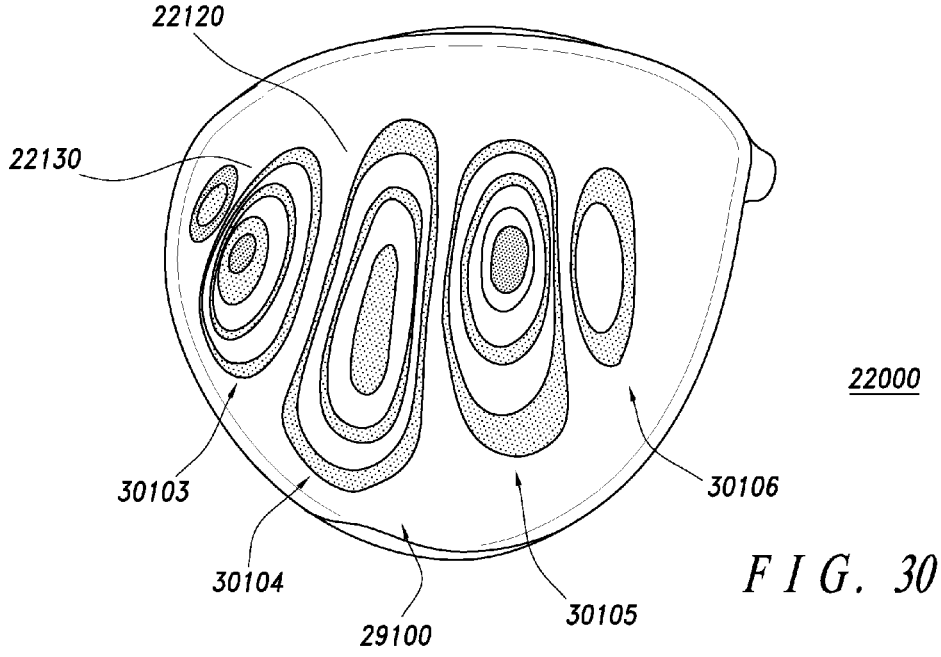
22120
22130
22000
30103
30106
30104
30105
29100

FIG. 30

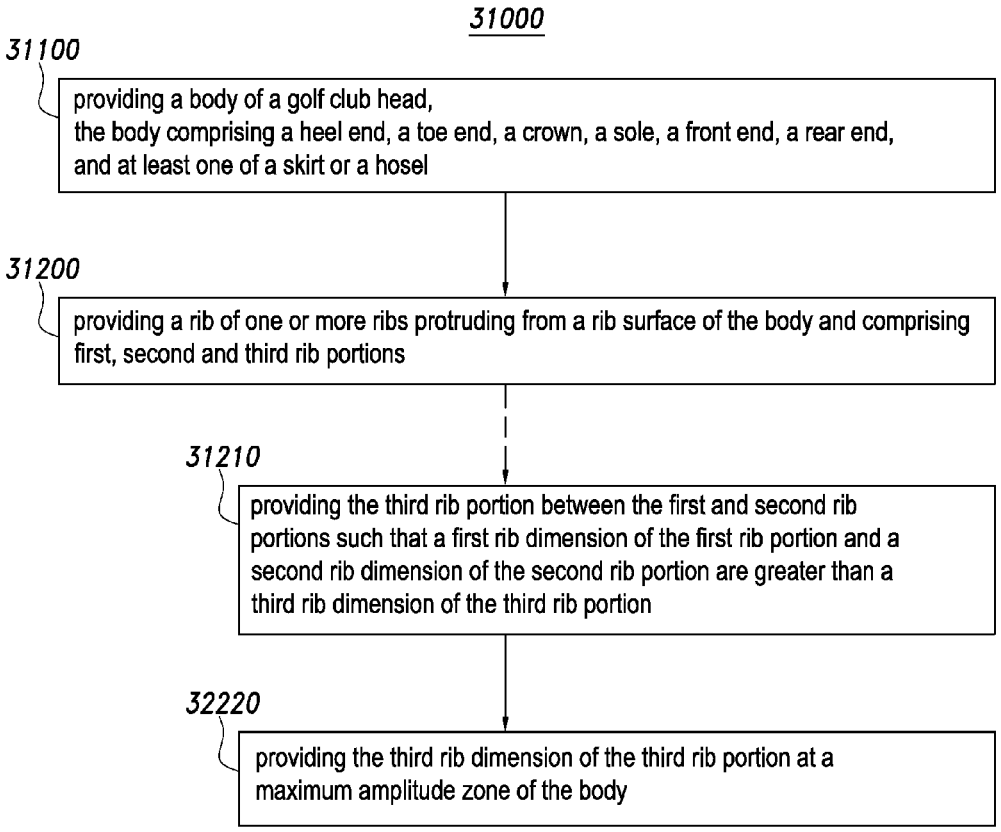
31000
31100
providing a body of a golf club head, the body comprising a heel end, a toe end, a crown, a sole, a front end, a rear end, and at least one of a skirt or a hosel
31200
providing a rib of one or more ribs protruding from a rib surface of the body and comprising first, second and third rib portions
31210
providing the third rib portion between the first and second rib portions such that a first rib dimension of the first rib portion and a second rib dimension of the second rib portion are greater than a third rib dimension of the third rib portion
32220
providing the third rib dimension of the third rib portion at a maximum amplitude zone of the body

FIG. 31

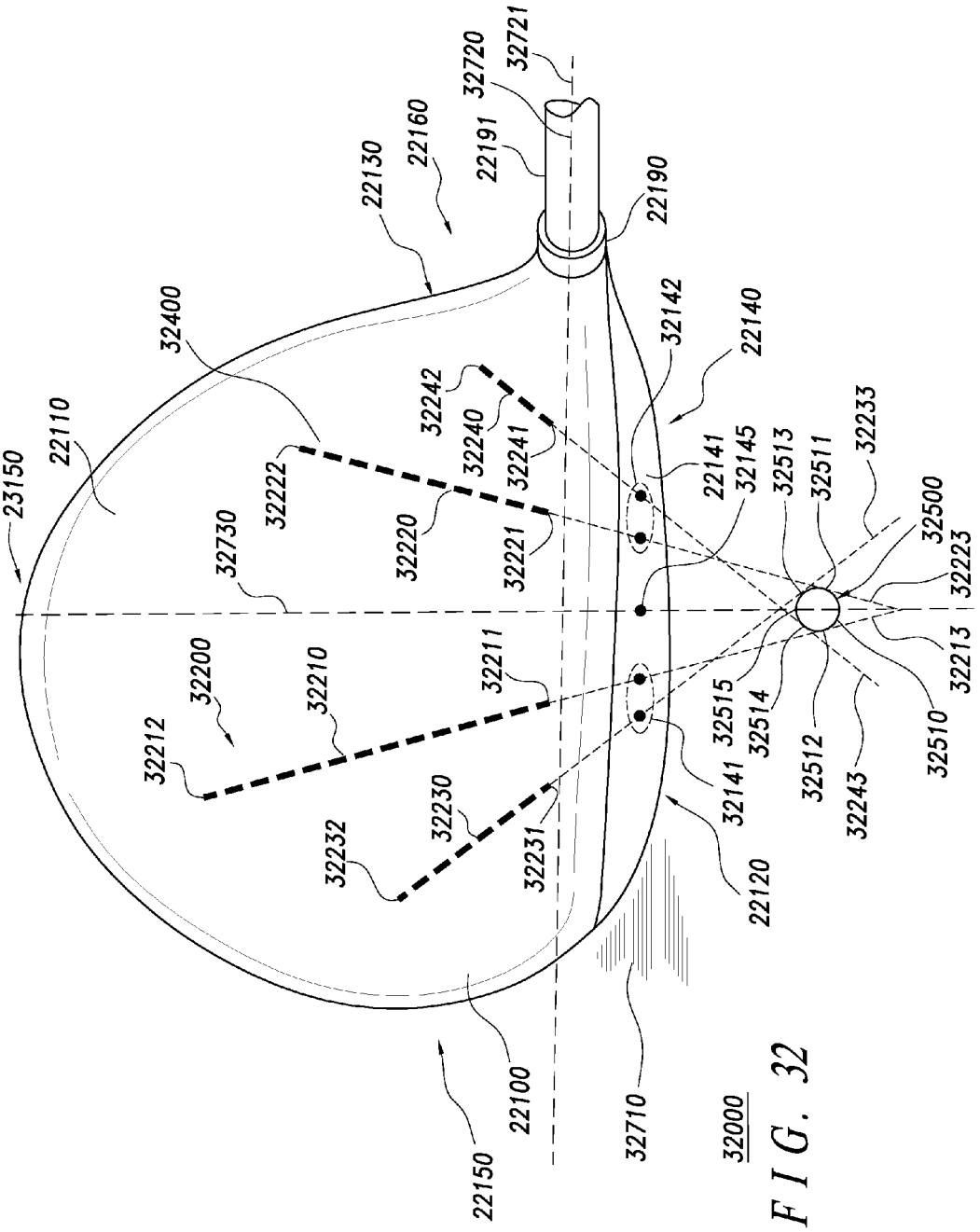
32721
32720
22191
22160
22130
22190
32400
32142
22140
32242
32240
32241
22110
23150
32222
32220
32221
32730
22141
32145
32513
32511
32233
32500
32223
32213
32510
32243
32512
32514
32515
32141
32200
32210
32211
32212
32230
32231
32232
22120
22100
22150
32710
32000

FIG. 32

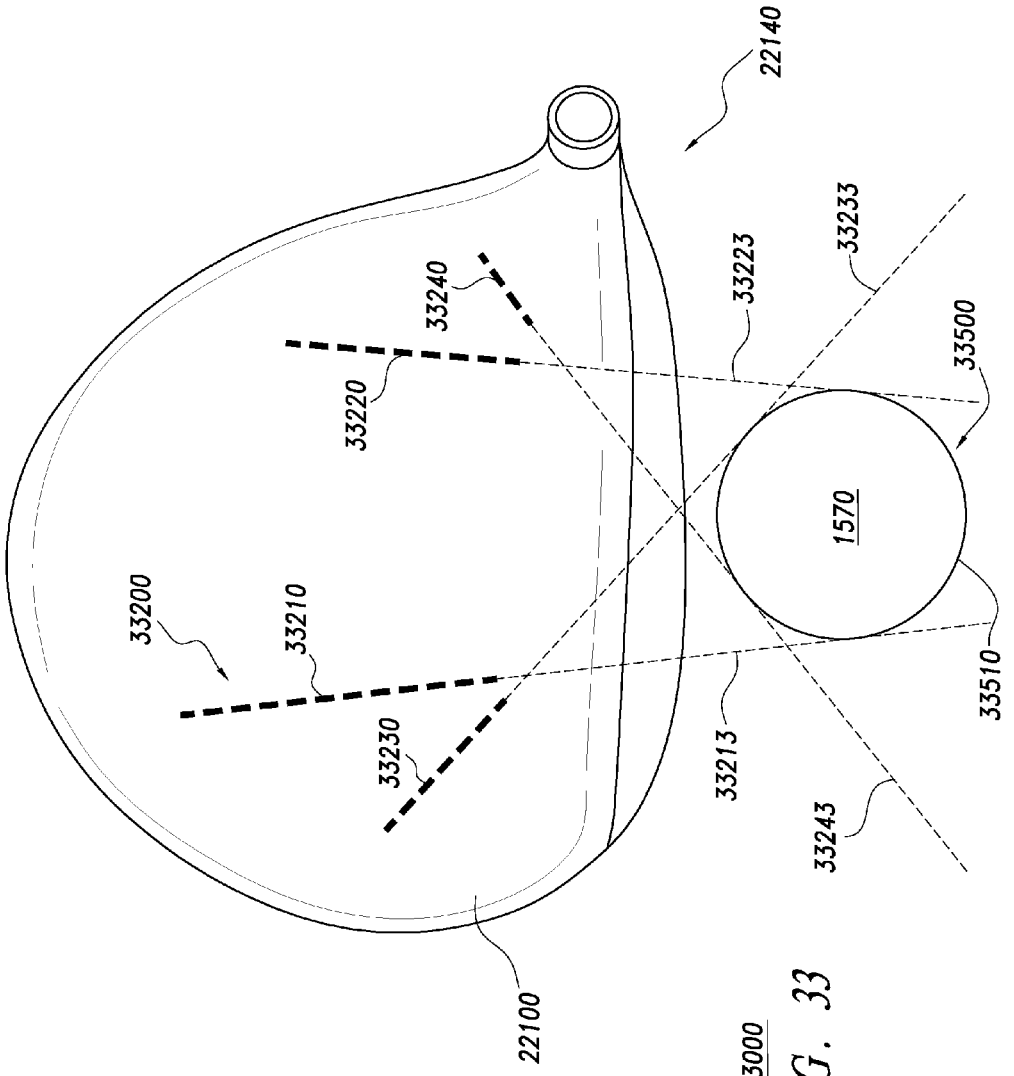
22140
33233
33223
33240
33500
33220
1570
33200
33210
33510
33230
33213
33243
22100
33000

FIG. 33

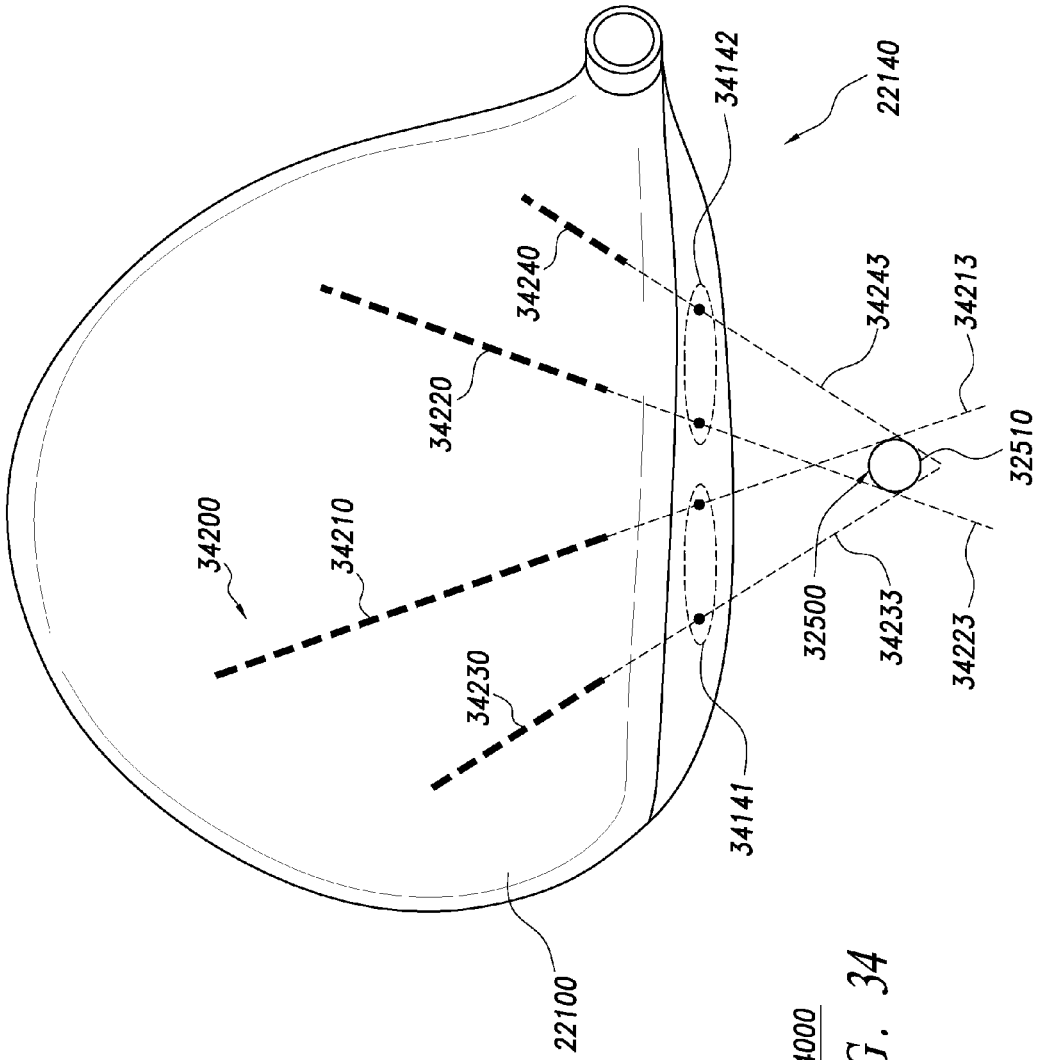
34142
22140
34240
34243
34213
34220
32510
34200
34210
32500
34233
34223
34230
34141
22100
34000

FIG. 34

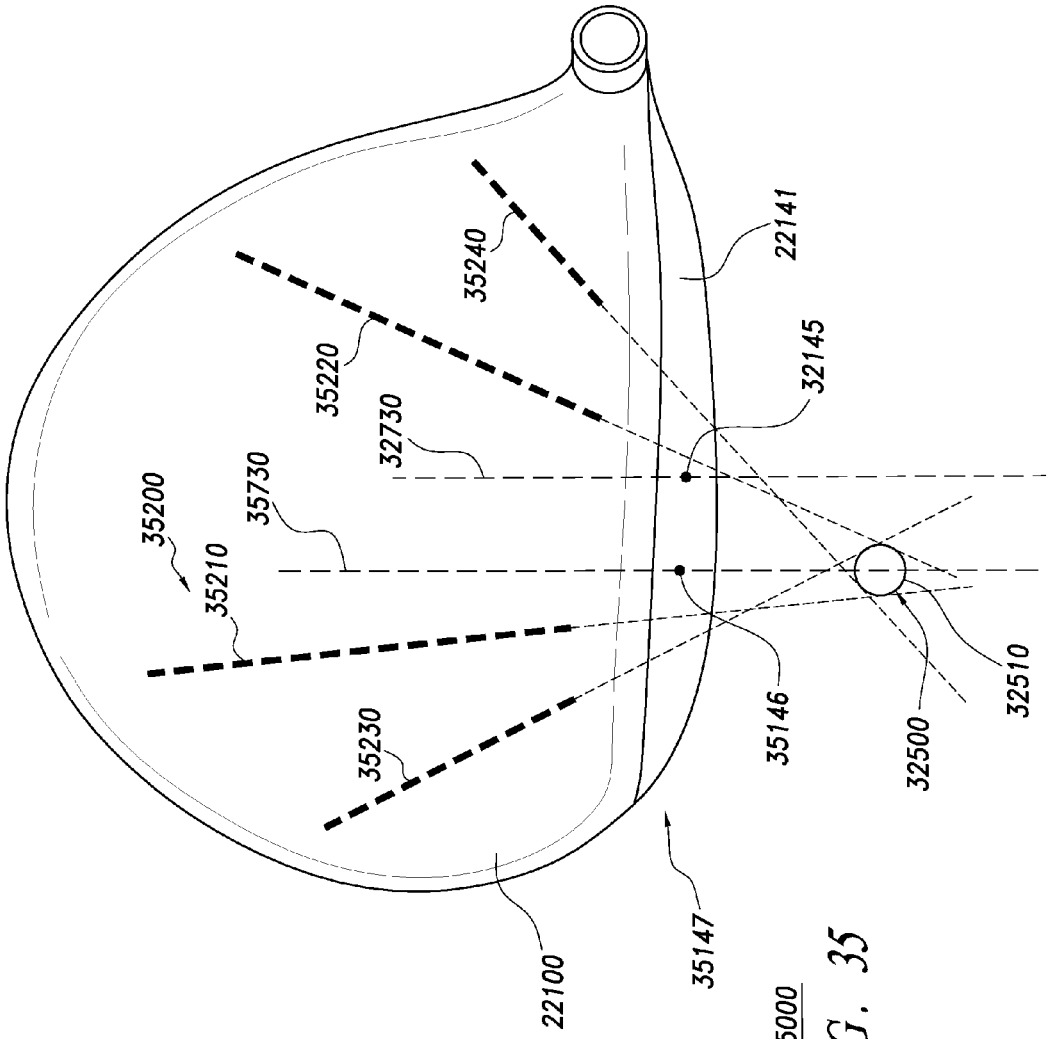
35240
22141
35220
32145
32730
35730
35200
35210
35230
35146
32500
32510
22100
35147
35000

FIG. 35

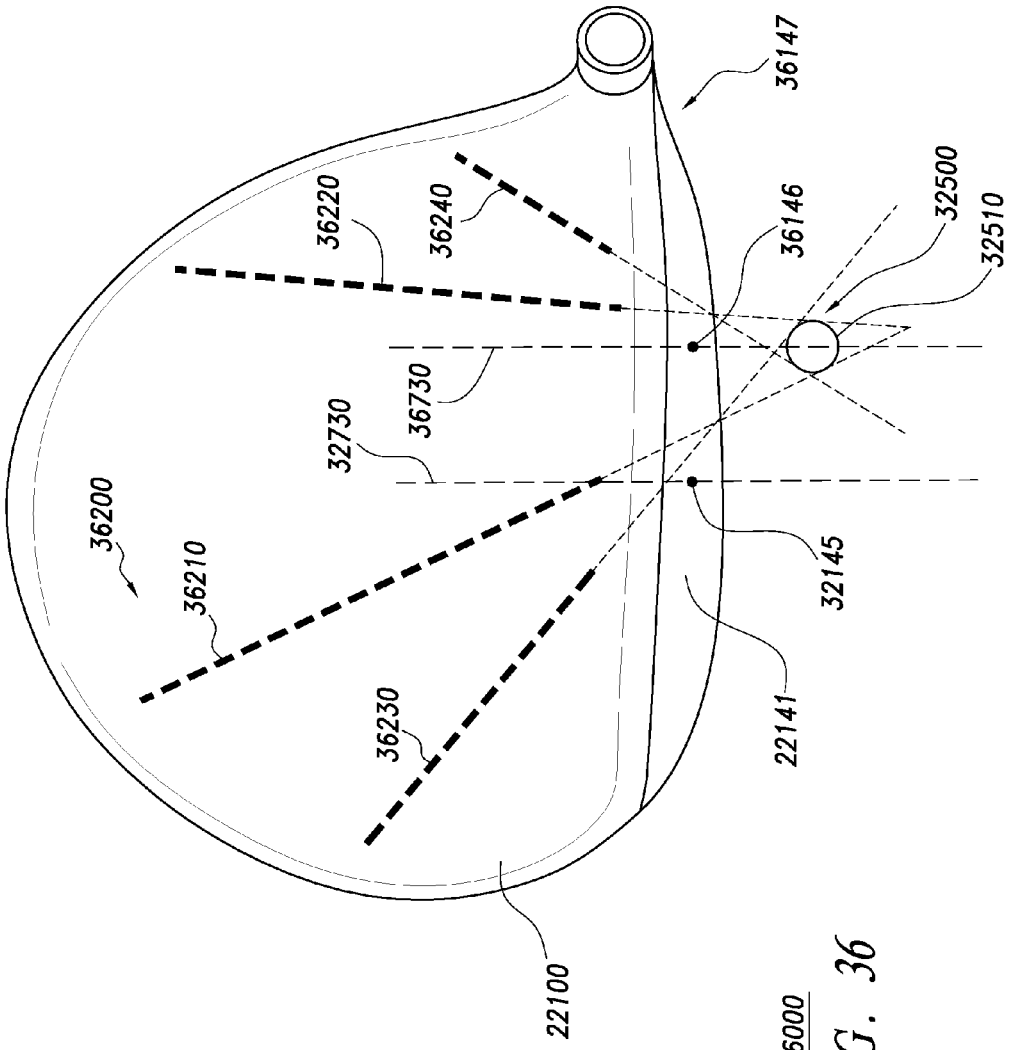
36147
36220
36240
36146
32500
32510
36730
32730
36200
36210
32145
36230
22141
22100
36000

FIG. 36

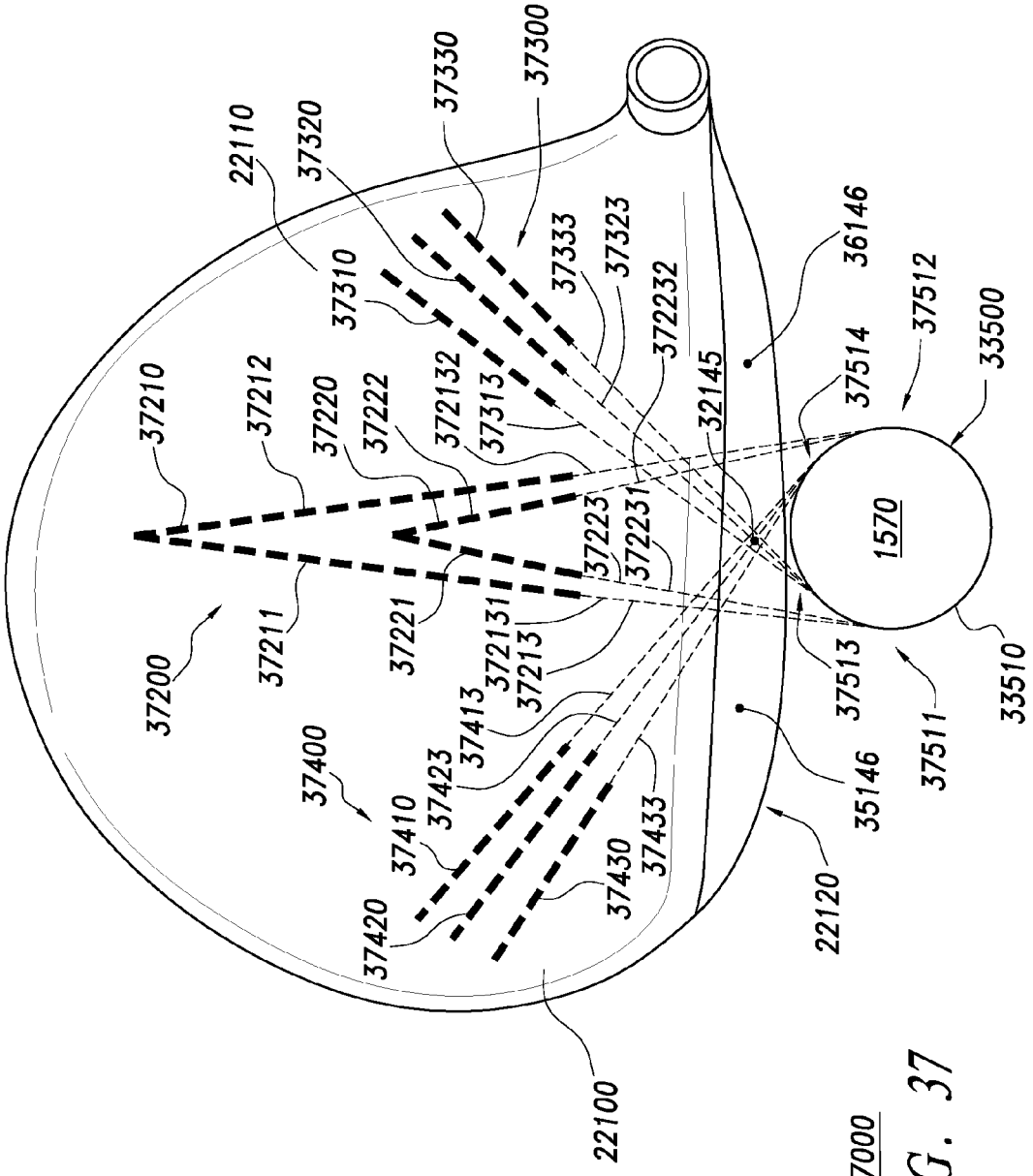
22110
37320
37330
37300
37310
37333
37323
36146
37512
37210
37212
37220
37222
372132
37313
372232
32145
37514
33500
37223
372231
1570
37200
37211
37221
372131
37213
37513
33510
37413
37511
37400
37423
35146
37410
37433
37420
37430
22120
22100
37000

FIG. 37

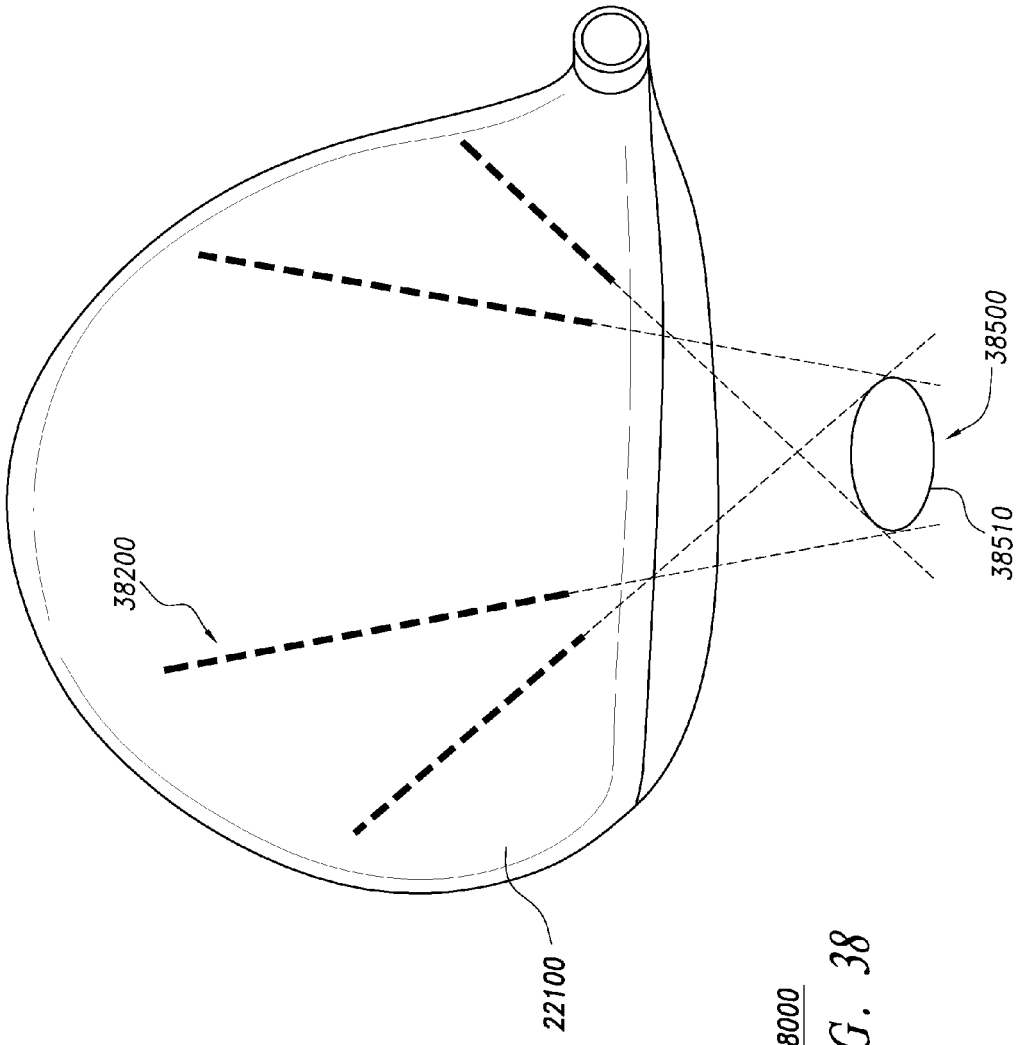

FIG. 38

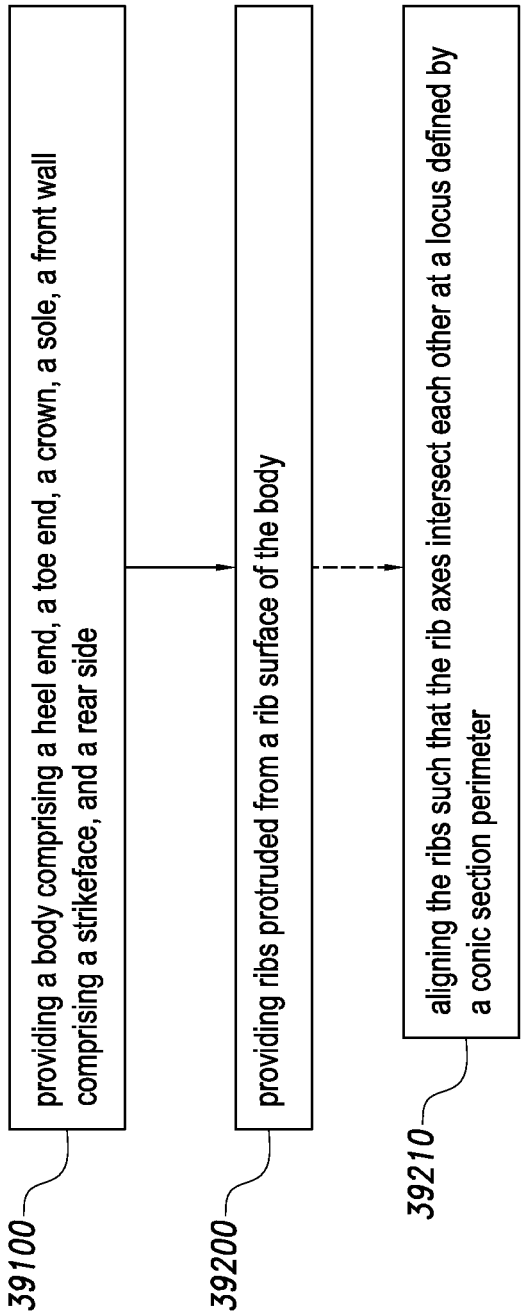
39000
providing a body comprising a heel end, a toe end, a crown, a sole, a front wall comprising a strikeface, and a rear side
providing ribs protruded from a rib surface of the body
aligning the ribs such that the rib axes intersect each other at a locus defined by a conic section perimeter
39100
39200
39210

FIG. 39

GOLF CLUB HEADS WITH RIBS AND RELATED METHODS

TECHNICAL FIELD

The present invention generally relates to golf equipment and, more particularly, to golf club heads.

BACKGROUND

Modern wood-type golf club heads are now almost exclusively made of metal rather than the persimmon wood that gave the clubs their name. These club heads are generally constructed as a hollow metal shell with a relatively thick face to withstand the ball impact and a relatively thick sole to withstand grazing impact with the ground as well as lowering the center of gravity of the club head. The remainder of the club head is manufactured as thin as possible so as to allow the maximum amount of material to be dedicated to the face and sole portions. Although the crown and skirt of a modern club head are quite thin, they still must be sufficiently rigid in the direction of the maximum stress in order to provide support for the face of the club head.

Ribs have commonly been employed in the crowns of club heads to enable the crowns to be as lightweight as possible while still providing sufficient stiffness in the fore and aft direction. U.S. Pat. No. 4,214,754 to Zebelean discloses a hollow club head with a crown that includes parallel ribs running perpendicular to the face of the club head that extend internally and bridge the thin transition with the crown. Similarly, U.S. Pat. No. 6,595,871 to Sano discloses a hollow club head with a separately attached face and a crown that includes a plurality of parallel ribs extending perpendicular to the face. U.S. Pat. No. 5,067,715 to Schmidt et al discloses a hollow club head that includes a crown with a plurality of parallel ribs that merge into and run perpendicularly to the club head face as well as a plurality of ribs that merge into and run perpendicularly to a rear wall of the club head.

The prior art fails to recognize that a club head having a crown with parallel ribs that uniformly reinforce the face of the club head is not an efficient structure since the club head face is not uniformly loaded but is subjected to essentially a point impact near its center.

BRIEF DESCRIPTION OF THE DRAWINGS

FIG. **1** is a front perspective view of a golf club head incorporating features of the present invention;

FIG. **2** is a cross-sectional view of the club head of FIG. **1** viewed from below;

FIG. **3** is a partial cross-sectional view of the club head of FIG. **1** viewed from the front;

FIG. **4** is a top view of a golf club head, according to a second embodiment;

FIG. **5** is a full cross-sectional view of the club head of FIG. **4** viewed from the front;

FIG. **6**. is a top view of a golf club head, according to a third embodiment;

FIG. **7** is a full cross-sectional view of the club head of FIG. **6** viewed from the side;

FIG. **8** is a top view of a golf club head, according to a fourth embodiment;

FIG. **9** is a full cross-sectional view of the club head of FIG. **8** viewed from the side;

FIG. **10** is a top view of a golf club head, according to a fifth embodiment;

FIG. **11** is a full cross-sectional view of the club head of FIG. **10** viewed from the front;

FIG. **12** is a top view of a golf club head, according to a sixth embodiment;

FIG. **13** is a full cross-sectional view of the club head of FIG. **12** viewed from the front;

FIG. **14** is a partial front cross-sectional view of a golf club head according to another embodiment;

FIG. **15** is a top cross-sectional view of the golf club head of FIG. **14** with respect to line XV-XV of FIG. **14**;

FIG. **16** illustrates a flowchart of a method for providing a golf club head in accordance with examples and embodiments of the present disclosure;

FIG. **17** illustrates a top cross-sectional view of a golf club head similar to the golf club head of FIGS. **14-15** but according to another embodiment;

FIG. **18** illustrates a top cross-sectional view of a golf club head according to another embodiment;

FIG. **19** illustrates a top cross-sectional view of a golf club head according to another embodiment;

FIG. **20** illustrates a flowchart of a method for providing a golf club head in accordance with examples and embodiments of the present disclosure;

FIG. **21** illustrates a side view of the golf club head of FIG. **18** at address;

FIG. **22** illustrates a front view of a golf club head with ribs;

FIG. **23** illustrates a top X-Ray view of the golf club head of FIG. **22**;

FIG. **24** shows a bottom-up interior view of the crown of the golf club head of FIG. **22**;

FIG. **25** shows a top-down interior view of the sole and skirt of the golf club head of FIG. **22**;

FIG. **26** illustrates a side view of a rib of the golf club head of FIG. **22** with respect to line XXVI-XXVI of FIG. **23**;

FIG. **27** illustrates a side view of a rib of the golf club head of FIG. **22** with respect to line XXVII-XXVII of FIG. **23**;

FIG. **28** illustrates a side view of a rib of the golf club head of FIG. **22** with respect to line XXVIII-XXVIII of FIG. **23**;

FIG. **29** illustrates a top FEA view of the crown of the golf club head of FIG. **22**, identifying high amplitude zones thereat;

FIG. **30** illustrates a bottom FEA view of the sole of the golf club head of FIG. **22**, identifying high amplitude zones thereat;

FIG. **31** illustrates a flowchart of a method for providing a golf club head in accordance with examples and embodiments of the present disclosure;

FIG. **32** illustrates a top X-Ray view of a golf club head with ribs;

FIG. **33** illustrates a top X-Ray view of a golf club head with ribs;

FIG. **34** illustrates a top X-Ray view of a golf club head with ribs;

FIG. **35** illustrates a top X-Ray view of a golf club head with ribs;

FIG. **36** illustrates a top X-Ray view of a golf club head with ribs;

FIG. **37** illustrates a top X-Ray view of a golf club head with ribs;

FIG. **38** illustrates a top X-Ray view of a golf club head with ribs; and

FIG. **39** illustrates a flowchart of a method for providing a golf club head in accordance with examples and embodiments of the present disclosure.

For simplicity and clarity of illustration, the drawing figures illustrate the general manner of construction, and descriptions and details of well-known features and tech-

niques may be omitted to avoid unnecessarily obscuring the invention. Additionally, elements in the drawing figures are not necessarily drawn to scale. For example, the dimensions of some of the elements in the figures may be exaggerated relative to other elements to help improve understanding of embodiments of the present invention. The same reference numerals in different figures denote the same elements.

The terms "first," "second," "third," "fourth," and the like in the description and in the claims, if any, are used for distinguishing between similar elements and not necessarily for describing a particular sequential or chronological order. It is to be understood that the terms so used are interchangeable under appropriate circumstances such that the embodiments described herein are, for example, capable of operation in sequences other than those illustrated or otherwise described herein. Furthermore, the terms "include," and "have," and any variations thereof, are intended to cover a non-exclusive inclusion, such that a process, method, system, article, device, or apparatus that comprises a list of elements is not necessarily limited to those elements, but may include other elements not expressly listed or inherent to such process, method, system, article, device, or apparatus.

The terms "left," "right," "front," "back," "top," "bottom," "over," "under," and the like in the description and in the claims, if any, are used for descriptive purposes and not necessarily for describing permanent relative positions. It is to be understood that the terms so used are interchangeable under appropriate circumstances such that the embodiments of the invention described herein are, for example, capable of operation in other orientations than those illustrated or otherwise described herein.

The terms "couple," "coupled," "couples," "coupling," and the like should be broadly understood and refer to connecting two or more elements or signals, electrically, mechanically or otherwise. Two or more electrical elements may be electrically coupled, but not mechanically or otherwise coupled; two or more mechanical elements may be mechanically coupled, but not electrically or otherwise coupled; two or more electrical elements may be mechanically coupled, but not electrically or otherwise coupled. Coupling (whether mechanical, electrical, or otherwise) may be for any length of time, e.g., permanent or semi-permanent or only for an instant.

As defined herein, two or more elements are "integral" if they are comprised of the same piece of material. As defined herein, two or more elements are "non-integral" if each is comprised of a different piece of material.

DESCRIPTION

In a first example, a golf club head can comprise a body and a plurality of ribs protruded from a rib surface of the body. The body can comprise having a heel end, a toe end, a sole, a front surface, and a rear surface. The plurality of ribs can comprise a first rib with a first longitudinal axis, a second rib with a second longitudinal axis, a third rib with a third longitudinal axis. The first, second, and third longitudinal axes can intersect at a common point external to the body.

In a second example, a golf club head can comprise a body and a plurality of ribs protruded from a rib surface of the body. The body can comprise a heel end, a toe end, a crown, a sole, a front surface, and a rear surface. The plurality of ribs can be generally straight and non-intersecting, and/or may comprise a first rib closest to the heel end of the body and a second rib closest to the toe end of the body. The plurality of ribs also may be arranged in a substantially radial pattern to form a fan-like shape between the first and second ribs.

In a third example, a method can comprise (a) providing a body of a golf club head with a heel end, a toe end, a sole, a front surface, and a rear surface, and (b) providing a plurality of ribs protruded from a rib surface of the body. The plurality of ribs can comprise a first rib with a first longitudinal axis extending through a common point, a second rib with a second longitudinal axis extending through the common point, and a third rib with a third longitudinal axis extending through the common point, wherein the common point can be external to the body.

In one embodiment, a golf club head comprises a body having a heel end, a toe end, a sole, and a front surface, and a plurality of ribs protruded from a rib surface of the body. The plurality of ribs comprise (a) a first rib comprising a first-first rib end, a first-second rib end opposite the first-first rib end, and a first axis extending through the first-first rib end and the first-second rib end; (b) a second rib comprising a second-first rib end, a second-second rib end opposite the second-first rib end and a second axis extending through the second-first rib end and the second-second rib end, and (c) a third rib comprising a third-first rib end, a third-second rib end opposite the third-first rib end, and a third axis extending through the third-first rib end and the third-second rib end. The front surface comprises a strikeface with a strikeface centerpoint, and a loft plane tangent to the strikeface centerpoint defines a front plane of the golf club head. The first rib can be located between the second and third ribs. The first axis can comprise a first distance between the front plane and the first-first rib end. The second axis can comprise a second distance between the front plane and the second-first rib end. The third axis can comprise a third distance between the front plane and the third-first rib end. At least one of the first, second, or third distances can be greater than at least another one of the first, second, or third distances.

In one embodiment, a golf club head can comprise a body having a heel end, a toe end, a sole, and a front surface, and a plurality of ribs protruded from a rib surface of the body. The plurality of ribs can comprise (a) a first rib comprising a first-first rib end, a first-second rib end opposite the first-first rib end, and a first axis extending through the first-first rib end and the first-second rib end; (b) a second rib comprising a second-first rib end, a second-second rib end opposite the second-first rib end, and a second axis extending through the second-first rib end and the second-second rib end; and (c) a third rib comprising a third-first rib end, a third-second rib end opposite the third-first rib end, and a third axis extending through the third-first rib end and the third-second rib end. The first rib can be located between the second and third ribs. The first axis can comprise a first distance between the front surface and the first-first rib end. The second axis can comprise a second distance between the front surface and the second-first rib end. The third axis can comprise a third distance between the front surface and the third-first rib end. At least one of the first, second, or third distances can be greater than at least another one of the first, second, or third distances.

In one example, a method for providing a golf club head can comprise providing a body having a heel end, a toe end, a sole, and a front surface, and providing a plurality of ribs protruded from a rib surface of the body. Providing the plurality of ribs can comprise (a) providing a first rib comprising a first-first rib end, a first-second rib end opposite the first-first rib end, and a first axis extending through the first-first rib end and the first-second rib end; (b) providing a second rib comprising a second-first rib end, a second-second rib end opposite the second-first rib end, and a second axis extending through the second-first rib end and the second-second rib end; and (c) providing a third rib comprising a third-first rib

end, a third-second rib end opposite the third-first rib end, and a third axis extending through the third-first rib end and the third-second rib end. Providing the body can comprise coupling a strikeface at the front surface, the strikeface comprising a strikeface centerpoint. A loft plane of the golf club head can be tangent to the strikeface centerpoint. When the golf club head is at address over a ground flat surface, the loft plane intersects the ground flat surface along a front intersection line, and a front plane extends orthogonal to the ground flat surface from the front intersection line. The first rib can be located between the second and third ribs. The first axis can comprise a first distance between the first-first rib end and a front reference comprising one of the loft plane, the front plane, or the front surface. The second axis can comprise a second distance between the second-first rib end and the front reference. The third axis can comprise a third distance between the third-first rib end and the front reference. The plurality of ribs are staggered relative to the front reference such that at least one of the first, second, or third distances can be greater than at least another one of the first, second, or third distances.

In one embodiment, a golf club head can comprise a body and a first rib. The body can comprise a heel end, a toe end, a crown, a sole, a front end, and a rear end, and at least one of a skirt or a hosel. The first rib can protrude from a rib surface of the body and can comprise first and second first-rib ends opposite each other, and first, second, and third first-rib portions protruded from the rib surface of the body. The first first-rib portion can be located between the first first-rib end and the third first-rib portion. The second first-rib portion can be located between the second first-rib end and the third first-rib portion. The first first-rib portion can comprise a first first-rib dimension comprising one of a first first-rib height substantially orthogonal to the rib surface when the first first-rib dimension comprises the first first-rib height, or a first first-rib thickness substantially orthogonal to the first first-rib height. The second first-rib portion can comprise a second first-rib dimension comprising one of a second first-rib height substantially orthogonal to the rib surface when the first first-rib dimension comprises the first first-rib height, or a second first-rib thickness substantially orthogonal to the second first-rib height when the first first-rib dimension comprises the first first-rib thicknesses. The third first-rib portion can comprise a third first-rib dimension comprising one of a third first-rib height substantially orthogonal to the rib surface when the first first-rib dimension comprises the first first-rib height, or a third first-rib thickness substantially orthogonal to the third first-rib height when the first first-rib dimension comprises the first first-rib thicknesses. The first and second first-rib dimensions can be greater than the third first-rib dimension.

In one embodiment, a golf club head can comprise a body and a first rib. The body can comprise a heel end, a toe end, a crown, a sole, a front end, a rear end. The first rib can protrude from a rib surface of the body. The first rib can comprise first and second first-rib ends opposite each other, and first, and second first-rib portions protruded from the rib surface of the body. The first first-rib end can be located at a first one of the crown or the sole. The second first-rib end is located at a second one of the crown or the sole. The first first-rib portion can be located between the first first-rib end and the second first-rib portion, and/or along the first one of the crown or the sole. The second first-rib portion can be located between the second first-rib end and the first first-rib portion, and/or along the second one of the crown or the sole.

In one implementation, a method can comprise providing a body and providing a first rib protruding from a rib surface of the body. The body can comprise a heel end, a toe end, a crown, a sole, a front end, and a rear end. The first rib can comprise first and second first-rib ends opposite each other, and first, second, and third first-rib portions protruded from the rib surface of the body. The first first-rib portion can be located between the first first-rib end and the third first-rib portion. The second first-rib portion can be located between the second first-rib end and the third first-rib portion. The first first-rib portion can comprise a first first-rib dimension comprising one of: a first first-rib height substantially orthogonal to the rib surface, or a first first-rib thickness substantially orthogonal to the first first-rib height. The second first-rib portion can comprise a second first-rib dimension comprising a second first-rib height substantially orthogonal to the rib surface when the first first-rib dimension comprises the first first-rib height, or a second first-rib thickness substantially orthogonal to the second first-rib height when the first first-rib dimension comprises the first first-rib thickness. The third first-rib portion can comprise a third first-rib dimension comprising a third first-rib height substantially orthogonal to the rib surface when the first first-rib dimension comprises the first first-rib height, or a third first-rib thickness substantially orthogonal to the third first-rib height when the first first-rib dimension comprises the first first-rib thickness. The first and second first-rib dimensions can be greater than the third first-rib dimension.

In one embodiment, a golf club head can comprise a body, an interior surface, and an interior cavity bounded by the interior surface. The body can comprise a heel end, a toe end, a crown, a sole, a front wall comprising a strikeface, and a rear side. The interior surface can be defined by the heel end, the toe end, the crown, the sole, the front wall, and/or the rear side. The golf club head can also comprise ribs protruded from a rib surface of the body, where the ribs can comprise first, second, and third ribs. The first rib can comprise a first first-rib endpoint, a second first-rib endpoint, and a first rib axis intersecting the first and second first-rib endpoints. The second rib can comprise a first second-rib endpoint, a second second-rib endpoint, and a second rib axis intersecting the first and second second-rib endpoints. The third rib can comprise a first third-rib endpoint, a second third-rib endpoint, and a third rib axis intersecting the first and second third-rib endpoints. With respect to a top view of the golf club head, the first, second, and third rib axes intersect each other and are tangent to a locus defined by a conic section perimeter.

In one implementation, a method for providing a golf club head can comprise providing a body and providing ribs protruded from a rib surface of the body. The body can comprise a heel end, a toe end, a crown, a sole, a front wall comprising a strikeface, a rear side, an interior surface defined by the heel end, the toe end, the crown, the sole, the front wall, and/or the rear side, and an interior cavity bounded by the interior surface. The ribs can comprise first, second, and third ribs. The first rib can comprise a first first-rib endpoint, a second first-rib endpoint, and a first rib axis intersecting the first and second first-rib endpoints. The second rib can comprise a first second-rib endpoint, a second second-rib endpoint, and a second rib axis intersecting the first and second second-rib endpoints. The third rib can comprise a first third-rib endpoint, a second third-rib endpoint, and a third rib axis intersecting the first and second third-rib endpoints. With respect to a top view of the golf club head, the first, second, and third rib axes intersect each other and are tangent to a locus defined by a conic section perimeter.

In one embodiment, a golf club head can comprise a body and a plurality of ribs protruded from a rib surface of the body. The body can comprise a heel end, a toe end, a crown, a sole, a front wall comprising a strikeface, and a rear side. The

plurality of ribs can comprise a first rib with a first longitudinal axis, a second rib with a second longitudinal axis; and a third rib with a third longitudinal axis. The first, second, and third longitudinal axes can intersect at a common point external to the body. The plurality of ribs can be non-convex relative to the crown of the golf club head.

Other examples and embodiments are further disclosed herein. Such examples and embodiments may be found in the figures, in the claims, and/or in the present description.

With reference to FIGS. **1-3**, golf club **10** comprises a club head **12**, a hosel **14** and a shaft **16**. Club head **12** is composed of a hollow body **18**, typically made of stainless steel, titanium or other material having a high shear modulus of elasticity and high strength-to-weight ratio. Hollow body **18** comprises a front wall or face **20** adapted for impacting a golf ball. Hollow body **18** further comprises a top wall or crown **22**, a bottom wall or sole **24**, and a side wall or skirt **26** that connects the face **20** to crown **22** and sole **24**. Club head **12** further includes a heel end **30** and a toe end **32**. Skirt **26** wraps around the club head **12** between the heel and toe ends **30**, **32** to form a rear wall **28**. Golf club head **12** can be a golf club head for a driver type club, a fairway wood, or a hybrid club.

Crown **22** comprises a thin walled structure preferably cast as part of hollow body **18**. Crown **22** is preferably titanium having a relatively thin thickness dimension of 0.076 centimeters (cm)±0.013 cm. Crown **22** is reinforced with a plurality of ribs **34** extending downward from lower surface **36** of crown **22**. Each rib **34** extends from a first end proximal, but spaced from, the front wall **20** to a second end proximal, but spaced from, the rear wall **28**. The ribs **34** are spaced apart by a greater amount, preferably 20 percent greater, at their second ends than at their first ends. Adjacent ribs **34** diverge from their first ends toward their second ends by an angle of at least 5 degrees. Ribs **34** comprise narrow, elongate, generally straight, metallic, shock wave distributing elements with a height dimension of 0.051 cm.±0.013 cm and width dimension of 0.178 cm±0.013 cm. Ribs **34** are generally convex downward when viewed in cross-section and blend smoothly into lower surface **36** of crown **22**. It will be understood that crown **22** is free of ribs extending transversely between the ribs **34**.

The lower surface **36** of the crown **22** has a forward portion and a rearward portion as defined by a midline lying generally parallel to the front wall **20** one-half the distance between a forwardmost point on the front wall **20** and a rearwardmost point on the rear wall **28**. The first ends of the ribs **34** terminate in the forward portion of the crown **22** and the second ends of the ribs **34** terminate in the rearward portion of the crown **22**.

As shown most clearly in FIG. **2**, ribs **34** are arrayed in a pattern such that the longitudinal axes **38** of the ribs **34** radiate from and intersect at a point **40** in space located forward of front wall **20**. Point **40** is preferably located within the middle one third (W/3) of the width of front wall **20** and is preferably located substantially in front of the center line of front wall **20**. Note that because club head **12** is a three dimensional body, as used herein, point **40** refers to a single point when viewed in plan view as in FIG. **2**. Alternatively, point **40** can be thought of as a vertical line consisting of the locus of intersections of vertical planes passing through the center lines of the ribs **34**.

Ribs **34** originate at a first location proximal the intersection **42** of the rear surface **44** of front wall **20** and lower surface **36** of crown **22** and extend to a second location proximal rear wall **28**. In the illustrative embodiment, at least half, and preferably all of the ribs **34** extend from front wall **20** past the mid-point (L/2) of club head **12** and are not interconnected by any transverse ribs. Accordingly, each rib **34** acts independently of the other ribs **34** interconnected only by the intervening thin section of crown **22** therebetween. Preferably, point **40** is also no more than L/2 forward of front wall **20**. This results in a pattern of ten ribs **34** subtending an angle of approximately 60 degrees or an angular divergence of from 4 to 8 degrees, preferably about 6 degrees of divergence between adjacent ribs **34**.

The surprising result of this arrangement of ribs **34** is that although an array of perpendicular ribs 0.051 cm high by 0.178 cm wide results in only a 9% reduction in maximum stress as compared with unreinforced crown region, ribs **34** arranged in a radial fan pattern in accordance with the present invention reduce maximum stress in the crown region by almost 36%. Although not wishing to be held to any particular theory of operation, it is believed that because the face **20** itself deforms non-uniformly extending outward from the point of impact, the loads are transferred to the crown region in a similar non-uniform manner radiating outward from the point of impact. Therefore, arranging the ribs **34** in a radial pattern extending out from near the point of impact yields a crown **22** that more efficiently supports the face **20** during impact.

In addition to straight linear ribs with substantially constant widths and heights as demonstrated in the example of FIGS. **1-3**, it is possible to have alternate embodiments of a golf club head with ribs. For example, the ribs can be curved or the heights and/or widths of the ribs can be varied.

As an example, FIG. **4** illustrates another embodiment of a golf club head. FIG. **5** illustrates a cross-sectional view of the embodiment of FIG. **4** taken at the lines labeled "**5**." Golf club head **412** (FIG. **4**) includes a hollow body **418** (FIG. **4**) with a front wall **420** (FIG. **4**), a crown **422** (FIG. **4**), a sole **524** (FIG. **5**), a side wall **526** (FIG. **5**) connecting crown **422** and sole **524**, a heel end **430** (FIG. **4**), a toe end **432** (FIG. **4**), and a rear side **428** (FIG. **4**) that is opposite of front wall **420**. In addition, golf club head **412** can also include ribs **440** (FIG. **4**) that extend downwardly from the lower surface of crown **422**. In the example of the embodiment illustrated in FIG. **4**, ribs **440** comprise ribs **441**, **442**, **443**, **444**, **445**, and **446** that have a first end that is proximal to front wall **420** and a second end that is proximal to rear side **428**.

In some examples, one or more of ribs **440** can be curved. As an example, each of ribs **441**, **442**, **443**, **444**, **445**, and **446** are curved in the example of FIG. **4**. In other examples, however, some of ribs **440** may not be curved. For example, rib **441** can be linear. When ribs **440** are curved, the length of ribs **440** can be increased. A longer rib allows for more of the rib to absorb the vibration.

Each of ribs **440** of FIG. **4** are curved. In some examples, ribs **440** can be curved in different directions. For example, ribs **441**, **442**, and **443** can be curved in one direction, while ribs **444**, **445**, and **446** can be curved in the opposite direction. Ribs **441**, **442**, and **443** are curved convexly with respect to toe end **432**. Therefore, the first end and second end of ribs **441**, **442**, and **443** are curved away from toe **432** end towards heel end **430**. On the other hand, ribs **444**, **445**, and **446** are curved convexly with respect to heel end **430**. Therefore, the first end and second end of ribs **444**, **445**, and **446** are curved away from heel end **430** towards toe end **432**. In one example, at least two of ribs **440** would intersect if extended forwardly in a linear or curved fashion toward front wall **420**. For example, the linear extension of rib **442** would intersect with the linear extension of rib **444** near front wall **420** or, in a different embodiment, in front of front wall **420**. It should be noted that there may be alternate curve arrangements for ribs **440**. For example, more ribs of ribs **440** may curve towards

one direction than the other, or all the ribs may curve in the same direction. In addition, there may be less or more than six ribs **440**.

Each of ribs **440** can have a radius of curvature. A radius of curvature is the radius of the circle that is created by an extrapolation of the rib. In some examples, each of ribs **440** has a different radius of curvature. In other examples, some of the radii can be approximately equal to each other.

In the example of golf club head **412** illustrated in FIG. **4**, rib **441** has the largest radius of curvature. The radius of curvature of the subsequent ribs decreases the closer the rib is to heel end **430** or toe end **432** relative to rib **441**. For example, the radius of curvature of rib **442** is less than that of rib **441**, and the radius of curvature of rib **443** is less than that of rib **442**. Furthermore, the radius of curvature of rib **444** is less than that of rib **441**; the radius of curvature of rib **445** is less than that of rib **444**; and the radius of curvature of rib **446** is less than that of rib **445**. In other examples the radii of curvature of ribs **440** can increase the closer the rib is to heel end **430** or toe end **432** relative to rib **441**. In yet other examples, the radii of curvature of ribs **440** can have no relation to the rib's position relative to rib **441**.

In the same or other examples, the radii of curvature for the ribs can be symmetric with each other according to their position relative to rib **441**. For example, the radius of curvature of rib **442** can be approximately equal to the radius of curvature of rib **444**, and the radius of curvature of rib **443** can be approximately equal to the radius of curvature of rib **445**. In other examples, the radii of curvature for ribs **440** are asymmetric with each other.

Each of ribs **440** has a width dimension. In the example of FIG. **4**, each of ribs **440** has a width that is approximately equal to the other ribs. In other examples, ribs **440** can have widths that are not equal to every other rib. In some examples, each of ribs **440** has a tapering first end and a tapering second end. In other examples, there is no tapering of the first end and/or the second end.

In addition, each of ribs **440** has a height dimension. The height dimension is a measure of the distance that a rib extends from crown **422** into hollow body **418**. In the example of FIG. **5**, each of ribs **440** has a height that is approximately equal to the heights of each of the other ribs. In other examples, ribs **440** can have heights that are not equal to the other ribs.

Each of ribs **440** has a length dimension also. The length dimension is a measure of the (curved) distance between a rib's first end and its second end. In the example of FIG. **4**, the ribs towards the midpoint between toe end **432** and heel end **430** have the greatest length. In addition, the length of a rib decreases the closer the rib is to toe end **432** or heel end **430**. As an example, rib **441** has the greatest length; the length of rib **442** is greater than that of rib **443**; the length of rib **444** is greater than that of rib **445**; and the length of rib **445** is greater than that of rib **446**. In other examples, all of ribs **440** have an approximately equal length.

FIG. **6** illustrates another embodiment of a golf club head. FIG. **7** illustrates a cross-sectional view of the embodiment of FIG. **6** taken at the lines labeled "**7**." Golf club head **612** (FIG. **6**) includes a hollow body **618** (FIG. **6**) with a front wall **620** (FIG. **6**), a crown **622** (FIG. **6**), a sole **724** (FIG. **7**), a side wall **726** (FIG. **7**) connecting crown **622** and sole **624**, a heel end **630** (FIG. **6**), a toe end **632** (FIG. **6**), and a rear side **628** (FIG. **6**). In addition, golf club head **612** can also include ribs **640** (FIG. **6**) that extend downwardly from the lower surface of crown **622**. In the example of the embodiment illustrated in FIG. **6**, ribs **640** comprise ribs **641**, **642**, **643**, **644**, **645**, and **646** that have a first end that is proximal to toe end **632** and a second end that is proximal to heel end **630**.

In some examples, one or more of ribs **640** can be curved. As an example, each of ribs **641**, **642**, **643**, **644**, **645**, and **646** are curved in the example of FIG. **6**. In other examples, however, some of ribs **640** may not be curved. For example, rib **641** can be linear.

Each of ribs **640** of FIG. **6** are curved. In some examples, ribs **640** are all curved in the same direction. For example, ribs **641**, **642**, **643**, **644**, **645**, and **646** are curved convexly with respect to front wall **620**. Therefore, the first end and second end of ribs **640** are curved away from front wall **620**. It should be noted that there may be alternate curve arrangements for ribs **640**. For example, if the dimensions of golf club head **612** decrease significantly at rear side **628** relative to front wall **620**, some of ribs **640** may be curved concavely with respect to front wall **602**. In other embodiments, some of ribs **640** may have a first end that is proximal to front wall **620** and a second end that is proximal to rear side **628**. In addition, there may be less or more than six ribs **440**.

Each of ribs **640** can have a radius of curvature. In some examples, each of ribs **640** has a different radius of curvature. In other examples, some of the radii of curvature can be approximately equal to each other.

In the example of golf club head **612** illustrated in FIG. **6**, rib **641** has the largest radius of curvature. The radius of curvature of the subsequent ribs decreases the closer the rib is to rear end **628**. For example, the radius of curvature of rib **642** is less than that of rib **641**; the radius of curvature of rib **643** is less than that of rib **642**; the radius of curvature of rib **644** is less than that of rib **643**; the radius of curvature of rib **645** is less than that of rib **644**; and the radius of curvature of rib **646** is less than that of rib **645**. In other examples, the radii of curvature of ribs **640** can increase for each rib that is closer to rear **628**. In yet other examples, the radii of curvature of ribs **640** have no relation to the rib's position relative to rear end **628**.

Each of ribs **640** has a width dimension. In the example of FIG. **6**, each of ribs **640** has a width that is approximately equal to the other ribs. In other examples, ribs **640** can have widths that are not equal to the other ribs. In some examples, each of ribs **640** has a tapering first end and a tapering second end. In other examples, there is no tapering of the first end and/or the second end.

In addition, each of ribs **640** has a height dimension. The height dimension is a measure of the distance that a rib extends from crown **622** into hollow body **618**. In the example of FIG. **7**, each of ribs **640** have a height that is approximately equal to the heights of each of the other ribs. In other examples, ribs **640** can have heights that are not equal to the other ribs.

Each of ribs **640** has a length dimension also. The length dimension is a measure of the (curved) distance between a rib's first end and its second end. In the example of FIG. **6**, the ribs closer to front wall **620** generally have a greater length than the ribs closer to rear side **628**. As an example, the length of rib **642** is greater than that of rib **643**; the length of rib **643** is greater than that of rib **644**; the length of rib **644** is greater than that of rib **645**; and the length of rib **645** is greater than that of rib **646**. The length of rib **642**, however, is greater than that of rib **641**. In other examples, all of ribs **640** have an approximately equal length.

FIG. **8** illustrates another embodiment of a golf club head. FIG. **9** illustrates a cross-sectional view of the embodiment of FIG. **8** taken at the lines labeled "**9**." Golf club head **812** (FIG. **8**) includes a hollow body **818** (FIG. **8**) with a front wall **820** (FIG. **8**), a crown **822** (FIG. **8**), a sole **924** (FIG. **9**), a side wall

926 (FIG. 9) connecting crown 422 and sole 524, a heel end 830 (FIG. 8), a toe end 832 (FIG. 8), and a rear side 828 (FIG. 8) that is opposite of front wall 820. In addition, golf club head 812 can also include ribs 840 (FIG. 8) that extend downwardly from the lower surface of crown 822. In the example of the embodiment illustrated in FIG. 8, ribs 840 comprise ribs 841, 842, 843, 844, and 845 that have a first end that is proximal to toe end 832 and a second end that is proximal to heel end 830.

In some examples, one or more of ribs 840 can be curved. As an example, each of ribs 841, 842, 843, 844, and 845 are curved in the example of FIG. 8. In other examples, however, some of ribs 840 may not be curved. For example, rib 841 can be linear.

Each of ribs 840 of FIG. 8 are curved. In some examples, ribs 840 are all curved in the same direction. For example, ribs 841, 842, 843, 844, and 845 are curved concavely with respect to front wall 820. Therefore, the first end and second end of ribs 840 are curved toward front wall 820. It should be noted that there may be alternate curve arrangements for ribs 840. For example, some of ribs 840 may have a first end that is proximal to front wall 820 and a second end that is proximal to rear side 828. In addition, there may be less or more than six ribs 840.

Each of ribs 840 has a radius of curvature. In some examples, each of ribs 840 has a different radius of curvature. In other examples, some of the radii can be approximately equal.

In the example of golf club head 812 illustrated in FIG. 8, rib 841 has the smallest radius of curvature. The radius of curvature of the subsequent ribs increases the closer the rib is to rear end 828. For example, the radius of curvature of rib 842 is greater than that of rib 841; the radius of curvature of rib 843 is greater than that of rib 842; the radius of curvature of rib 844 is greater than that of rib 843; and the radius of curvature of rib 845 is greater than that of rib 844. In other examples the radii of curvature of ribs 840 can decrease for each rib that is closer to rear end 828. In yet other examples, the radii of curvature of ribs 840 have no relation to the rib's position relative to rear end 828.

In the same or other examples, the radii of curvature for the ribs can be such that the ribs are concentric. If each of ribs 840 was extrapolated to complete a circle, the resulting circles would be concentric. In other examples, the radii of curvature for ribs 840 are not concentric.

Each of ribs 840 has a width dimension. In the example of FIG. 8, each of ribs 840 has a width that is approximately equal to the other ribs. In other examples, ribs 840 can have widths that are not equal to the other ribs. In some examples, each of ribs 840 has a tapering first end and a tapering second end. In other examples, there is no tapering of the first end and/or the second end.

In addition, each of ribs 840 has a height dimension. The height dimension is a measure of the (curved) distance that a rib extends from crown 822 into hollow body 818. In the example of FIG. 9, each of ribs 840 has a height that is approximately equal to the heights of the other ribs. In other examples, ribs 840 can have heights that are not equal to the other ribs.

Each of ribs 840 has a length dimension also. The length dimension is a measure of the distance between a rib's first end and its second end. In the example of FIG. 8, the ribs closer to rear side 828 have a greater length than the ribs closer to front wall 820. As an example, rib 845 has the greatest length; the length of rib 844 is greater than that of rib 843; the length of rib 843 is greater than that of rib 842; and the length of rib 842 is greater than that of rib 841. In other examples, all of ribs 840 have an approximately equal length.

In addition to having curved ribs, a golf club head can have ribs that have varying widths. For example. FIG. 10 illustrates another embodiment of a golf club head. FIG. 11 illustrates a cross-sectional view of the embodiment of FIG. 10 taken at the lines labeled "11." Golf club head 1012 (FIG. 10) includes a hollow body 1018 (FIG. 10) with a front wall 1020 (FIG. 10), a crown 1022 (FIG. 10), a sole 1124 (FIG. 11), a side wall 1126 (FIG. 11) connecting crown 1022 and sole 1124, a heel end 1030 (FIG. 10), a toe end 1032 (FIG. 10), and a rear side 1028 (FIG. 10) that is opposite of front wall 1020. In addition, golf club head 1012 can also include ribs 1040 (FIG. 10) that extend downwardly from the lower surface of crown 1022. In the example of the embodiment illustrated in FIG. 10, ribs 1040 comprise ribs 1041, 1042, 1043, 1044, and 1045 that have a first end that is proximal to front wall 1020 and a second end that is proximal to rear end 1028.

In some examples, one or more of ribs 1040 are linear. As an example, each of ribs 1041, 1042, 1043, 1044, and 1045 are linear in the example of FIG. 10. In other examples, however, some of ribs 1040 may not be linear. For example, one or more of ribs 1040 can be curved. In some examples, ribs 1040 are arranged so that each of the axes of ribs 1040 converge at a common point. In some examples, the common point is forward of the front wall. In other examples, each of the axes of ribs 1040 do not converge at a common point.

Each of ribs 1040 has a width dimension. In the example of FIG. 10, each of ribs 1040 has a width that tapers. For example, the width of each of ribs 1040 decreases from its midpoint to its first end and its second end. As demonstrated in FIG. 10, the width at the midpoint of each of ribs 1040 can be approximately equal to the width of each of the other ribs at their respective midpoints. In other examples, ribs 1040 can have widths at their midpoints that are not equal to the width of the other ribs at their respective midpoints.

The widths of ribs 1040 can taper at any rate. For example, as illustrated in FIG. 10, the widths can have a smooth, non-constant tapering, giving ribs 1040 the shape of an elongated oval. In other examples, the widths can taper in a linear or constant manner, giving ribs 1040 a shape similar to that of a diamond.

In addition, each of ribs 1040 has a height dimension. The height dimension is a measure of the distance that a rib extends from crown 1022 into hollow body 1018. In the example of FIG. 11, each of ribs 1040 has a height that tapers. For example, the height of each of ribs 1040 decreases from its midpoint to its first end and its second end. As demonstrated in FIG. 11, each of ribs 1040 can have a height that is approximately equal to the heights of the other ribs at their respective midpoints. In other examples, ribs 1040 can have heights at their midpoints that are not equal to the height of the other ribs at their respective midpoints.

The heights of ribs 1040 can taper at any rate. For example, as illustrated in FIG. 11, the widths can have a smooth, non-constant tapering, giving ribs 1040 a smooth contour. In other examples, the widths can taper more drastically or in a linear or constant manner, giving ribs 1040 a shape having a much more pointed height at the midpoint of ribs 1040.

Each of ribs 1040 has a length dimension also. The length dimension is a measure of the distance between a rib's first end and its second end. In the example of FIG. 10, the ribs closer to the midpoint between toe end 1032 and heel end 1030 have a greater length than the ribs closer to toe end 1032 or heel end 1030. As an example, rib 1041 has the greatest length; the length of rib 1042 is greater than that of rib 1043;

and the length of rib **1044** is greater than that of rib **1045**. In other examples, all of ribs **1040** have an approximately equal length.

FIG. **12** illustrates another embodiment of a golf club head. FIG. **13** illustrates a cross-sectional view of the embodiment of FIG. **12** taken at the lines labeled "**13**." Golf club head **1212** (FIG. **12**) includes a hollow body **1218** (FIG. **12**) with a front wall **1220** (FIG. **12**), a crown **1222** (FIG. **12**), a sole **1324** (FIG. **13**), a side wall **1326** (FIG. **13**) connecting crown **1222** and sole **1324**, a heel end **1230** (FIG. **12**), a toe end **1232** (FIG. **12**), and a rear side **1228** (FIG. **12**) that is opposite of front wall **1220**. In addition, golf club head **1212** can also include ribs **1240** (FIG. **12**) that extend downwardly from the lower surface of crown **1222**. In the example of the embodiment illustrated in FIG. **12**, ribs **1240** comprise ribs **1241**, **1242**, **1243**, **1244**, and **1245** that have a first end that is proximal to front wall **1220** and a second end that is proximal to rear end **1228**.

In some examples, one or more of ribs **1240** are linear. As an example, each of ribs **1241**, **1242**, **1243**, **1244**, and **1245** are linear in the example of FIG. **12**. In other examples, however, some of ribs **1240** may not be linear. For example, one or more of ribs **1240** can be curved. In some examples, ribs **1240** are arranged so that each of the axes of ribs **1240** converge at a common point. In some examples, the common point is forward of the front wall. In other examples, each of the axes of ribs **1240** do not converge at a common point.

Each of ribs **1240** has a width dimension. In the example of FIG. **12**, each of ribs **1240** has a width that remains substantially constant. In some examples, the width of each of ribs **1240** tapers at its first end and its second end. In other examples, the width of each of ribs **1240** does not taper at its first and/or second end. As demonstrated in FIG. **12**, the width of each of ribs **1040** can vary. For example, the closer a rib is to the midpoint between toe end **1232** and heel end **1230**, the greater the width of that particular rib. As illustrated in FIG. **12**, rib **1241** can have the largest width; the width of rib **1242** is greater than width of rib **1243**; and the width of rib **1244** is greater that the width of rib **1245**. In some examples, the widths of ribs **1240** are symmetric across golf club head **1212**. For example, the width of rib **1243** is approximately equal to the width of rib **1245**, and the width of rib **1242** is approximately equal to the width of rib **1244**. In other examples, the widths of ribs **1240** are asymmetric across golf club head **1212**. In yet other examples, the widths of ribs **1240** can change such as, for example, by increasing the closer the rib is to toe end **1232** or heel end **1230**. In further examples, the widths of ribs **1240** have no correlation to the rib's position relative to toe end **1232** and/or heel end **1230**. Ribs **1240** can be positioned so that the ribs with greater widths can be placed in areas of higher vibration.

In addition, each of ribs **1240** has a height dimension. The height dimension is a measure of the distance that a rib extends from crown **1222** into hollow body **1218**. In the example of FIG. **13**, each of ribs **1240** has a height that remains substantially constant. As also demonstrated in FIG. **13**, each of ribs **1240** can have a height that is different from the height of at least one of the other ribs. In some examples, the height of ribs **1240** increases the closer a rib is to the midpoint between toe end **1232** and heel end **1230**. As illustrated in FIG. **12**, rib **1241** can have the largest height; the height of rib **1242** is greater than height of rib **1243**; and the height of rib **1244** is greater that the height of rib **1245**. In some examples, the heights of ribs **1240** are symmetric across golf club head **1212**. For example, the height of rib **1243** is approximately equal to the height of rib **1245**, and the height of rib **1242** is approximately equal to the height of rib **1244**. In other examples, the heights of ribs **1240** are asymmetric across golf club head **1212**. In yet other examples, the heights of ribs **1240** can change, such as, for example, by increasing the closer the rib is to toe end **1232** and heel end **1230**. In further examples, the height of ribs **1240** has no correlation to the rib's position relative to toe end **1232** and/or heel end **1230**. Ribs **1240** can be positioned so that the ribs with greater heights can be placed in areas of higher vibration.

Each of ribs **1240** has a length dimension also. The length dimension is a measure of the distance between a rib's first end and its second end. In the example of FIG. **12**, the ribs closer to the midpoint between toe end **1232** and heel end **1230** have a greater length than the ribs closer to toe end **1232** or heel end **1230**. As an example, rib **1241** has the greatest length; the length of rib **1242** is greater than that of rib **1243**; and the length of rib **1244** is greater than that of rib **1245**. In other examples, all of ribs **1240** have an approximately equal length.

In other embodiments, ribs can have widths and/or heights that taper and vary from one rib to the next. For examples, ribs can have tapering widths as illustrated by ribs **1040** of FIG. **10**, and ribs can have varying widths as illustrated by ribs **1240** of FIG. **12**. In addition, ribs can have tapering heights as illustrated by ribs **1040** of FIG. **11**, and ribs can have a varying heights as illustrated by ribs **1240** of FIG. **13**.

In another embodiment, a method of providing a golf club head is provided. The method of providing a golf club head can include providing a body having a heel end, a toe end, a crown having an upper surface and a lower surface, a sole, a front wall, a rear side, and ribs extending from a first end to a second end and extending downwardly from the lower surface of the crown. In addition, the ribs can comprise a first rib and at least one second rib that is curved. As an example, the heel end can be heel end **430** (FIG. **4**), heel end **630** (FIG. **6**), or heel end **830** (FIG. **8**); the toe end can be toe end **432** (FIG. **4**), toe end **632** (FIG. **6**), or toe end **832** (FIG. **8**); the crown can be crown **422** (FIG. **4**), crown **622** (FIG. **6**), or crown **822** (FIG. **8**); the sole can be sole **524** (FIG. **5**), sole **724** (FIG. **7**), or sole **924** (FIG. **9**); the front wall can be front wall **420** (FIG. **4**), front wall **620** (FIG. **6**), or front wall **820** (FIG. **8**); the rear side can be rear side **428** (FIG. **4**), rear side **628** (FIG. **6**), or rear side **828** (FIG. **8**); and ribs can be ribs **440** (FIG. **4**), ribs **640** (FIG. **6**), or ribs **840** (FIG. **8**).

In one example, the ribs can be provided to be integral with the body. In other examples, the ribs can be provided to be initially separate from the body. Afterwards, the ribs can be coupled to the body by way of a brazing technique, a welding technique, or an adhesive.

In yet another embodiment, a method of providing a golf club head is provided. The method of providing a golf club head can include providing a body having a heel end, a toe end, a crown having an upper surface and a lower surface, a sole, a front wall, a rear side, and generally linear ribs extending downwardly from the lower surface of the crown and extending from a first end proximal the front wall to a second end proximal the rear side. In some examples, the ribs can have a tapering width from its midpoint towards its ends. In the same or other examples, the widths of at least two of the ribs are different. As an example, the heel end can be heel end **1030** (FIG. **10**) or heel end **1230** (FIG. **12**); the toe end can be toe end **1032** (FIG. **10**) or toe end **1232** (FIG. **12**); the crown can be crown **1022** (FIG. **10**) or crown **1222** (FIG. **12**); the sole can be sole **1124** (FIG. **11**) or sole **1324** (FIG. **13**); the front wall can be front wall **1020** (FIG. **10**) or front wall **1220** (FIG. **12**); the rear side can be rear side **1028** (FIG. **10**) or rear side **1228** (FIG. **12**); and ribs can be ribs **1040** (FIG. **10**) or ribs **1240** (FIG. **12**).

In one example, the ribs can be provided to be integral with the body. In other examples, the ribs can be provided to be initially separate from the body. Afterwards, the ribs can be coupled to the body by way of a brazing technique, a welding technique, or an adhesive.

Continuing with the figures, FIG. **14** illustrates a partial front cross-sectional view of golf club head **140**. FIG. **15** illustrates a top cross-sectional view of golf club head **140** with respect to line XV-XV of FIG. **14**. Golf club head **140** is similar to other golf club heads presented herein, such as golf club head **12** (FIGS. **1-4**), but differs by comprising ribs **1420** located at rib surface **1415**, where rib surface **1415** is defined by the extension of ribs **1420** and the space therebetween. In the present example, ribs **1420** comprise a single piece of material with rib surface **1415**, but there may be other embodiments where ribs **1420** may not be integral with rib surface **1415** and could be secured thereto via one or more mechanical or chemical fasteners.

Oftentimes, players or users of golf clubs can be able to gauge the quality of their hits based on the sound that the golf club head makes at impact with a golf ball. The ability to keep a consistent sound at impact can thus be an advantage for keeping such players or users within their comfort zone and/or for maintaining expectations regarding such sound/quality relationship. Considering the above, ribs **1420** can be configured in some embodiments to channel stresses and/or vibrations to achieve a desired impact sound when golf club head **140** impacts a golf ball such as golf ball **1570** (FIG. **15**). Such a characteristic may be valuable to maintain and/or restore a desired sound characteristic for the golf club head design, such as when the desired sound characteristic would otherwise be altered as a result of other modifications or improvements made to the structure of the golf club head design in search of better performance. In addition, as previously described with respect to other golf club heads herein disclosed, ribs **1420** may add reinforcement characteristics to the portion of the club head where rib surface **1415** is located to better dissipate or channel stress or impact forces.

Golf club head **140** comprises body **1410** having heel end **1411**, toe end **1412**, sole **1413**, crown **1414**, front surface **1416** (comprising strike face **1430** and target strike zone **1431**), rear surface **1517** (FIG. **15**), and skirt portion **1418**. Body **1410** also comprises rib surface **1415**, from which ribs **1420** protrude. In the present example, ribs **1420** comprise rib **1421** with rib longitudinal axis **1521** (FIG. **15**), rib **1422** with rib longitudinal axis **1522** (FIG. **15**), and rib **1423** with rib longitudinal axis **1523** (FIG. **15**), where rib longitudinal axes **1521-1523** intersect external to body **1410** at common point **1550** (FIG. **15**). Rib **1421** is located closest to heel end **1411**, rib **1422** is located closest to toe end **1412** of body **1410**, and rib **1423** is located between ribs **1411** and **1412**. Ribs **1420** are arranged on or over rib surface **1415** in a substantially radial pattern in the present example, forming a fan-like shape between rib **1421** and rib **1422**. Common point **1550** is located forward of front surface **1416** in the present embodiment, but there can be embodiments where common point **1550** is located elsewhere external to body **1410**. As an example, a different embodiment could comprise ribs similar to ribs **1420** but configured to intersect at a common point located behind rear surface **1517**.

Ribs **1420** also comprise rib **1424** with longitudinal axis **1524**, and rib **1425** with longitudinal axis **1525**. In the present example, longitudinal axes **1524** and **1525** also intersect at common point **15500** with longitudinal axes **1521-1523**. There can be other embodiments, however, where not all longitudinal axes of ribs **1420** need to intersect at common point **15500**. As an example, there can be embodiments where longitudinal axes **1524** and **1525** may intersect each other external to body **1410** but elsewhere other than at common point **15500**. Other embodiments may comprise a different number of ribs. As an example, ribs **1423-25** may be absent in some embodiments, such that ribs **1420** would comprise only two ribs. As another example, some embodiments may comprise more than five ribs, such as an embodiment with 10 ribs similar to that described with respect to FIGS. **1-3** but with ribs at sole **24** (FIG. **3**). Some of such embodiments may comprise ribs that may not intersect with all of the other ribs thereof.

In the present example of FIG. **15**, rib surface **1415** is located at sole **1413** internal to body **1410**, such that ribs **1420** are also internal to body **1410** and invisible at sole **1413** opposite rib surface **1415**. In other examples, however, ribs **1420** may be external to body **1410**, where rib surface could be located, instead, at an exterior surface of crown **1414** or at an exterior surface of sole **1413**. Ribs **1420** are non-convex relative to crown **1414**, and thus can be concave or substantially flat relative to crown **1414** in the present or other examples. Rib surface **1415** extends past sole **1413** into part of skirt portion **1418** of body **1410**. There can be other embodiments, however, where ribs **1420** need not extend into skirt portion **1418**. In some examples, extending ribs **1420** into skirt portion **1418** can be beneficial for reinforcing one or more sections of skirt portion **1418**, and/or for tuning the impact sound of golf club head **140**.

As can be seen in FIG. **15**, each of ribs **1420** are spaced apart from front surface **1416** and from rear surface **1517**. Such a characteristic can be beneficial, for example, so as to not interfere with the bending or deformation of the transition region between front surface **1416** and the rest of body **1410** upon impact with a golf ball. Also in the present example, different ribs of ribs **1420** are separated by different distances from front surface **1416** along their respective longitudinal rib axes. As an example, rib **1423** is spaced apart from front surface **1416** along rib longitudinal axis **1523** by a distance greater than the distance spacing apart ribs **1421** and/or **1422** from front surface **1416** along rib longitudinally axes **1521** and/or **1522**, respectively. In the present embodiment, rib **1421** is spaced apart from front surface **1416** by approximately 1.732 cm, rib **1422** is spaced apart from front surface **1416** by approximately 1.638 cm, rib **1423** is spaced apart from front surface **1416** by approximately 1.742 cm, rib **1424** is spaced apart from front surface **1416** by approximately 1.737 cm, and rib **1425** is spaced apart from front surface **1416** by approximately 1.709 cm. Such different spacing may be valuable in some examples for influencing or tuning the stiffness of the transition region between strike face **1430** and sole **1413** to control one or more attributes of golf club head **140**, such as a characteristic time, a coefficient of restitution, an impact sound, and/or a feel thereof. In other examples, ribs **1420** may be equally spaced apart from front surface **1416**.

In the present embodiment, rib **1421** comprises a length of approximately 4.1 cm, rib **1422** comprises a length of approximately 7.3 cm, rib **1423** comprises a length of approximately 8.6 cm, and rib **1424** comprises a length of approximately 6.5 cm, rib **1425** comprises a length of approximately 8.8 cm. The lengths of ribs **1420** can extend through and/or above indentations or other features of rib surface **1415**, such as indentations **1580** including indentations **1581-1583**. Indentations **1580** may thus partially engulf one or more portions of one or more of ribs **1420**, as can be seen in the example of FIG. **15**. As an example, parts of the top of ribs **1422** and **1425** are shown protruding above indentation **1581**, while parts of the top of ribs **1421**, **1424**, and **1423** are shown protruding above indentation **1582**. As another

example, parts of ribs **1422-1425** are shown protruding above indentations **1583**. Indentations **1581-1583** all protrude from rib surface **1415** into an interior of golf club head **140** in the embodiment of FIGS. **14-15**, where indentations **1581-1582** delineate pockets into which external weights can be attached to an exterior surface of golf club head **140**, and where indentations **1583** can correspond to a logo or other design located or embossed at rib surface **1415**. There can be other embodiments, however, where one or more of ribs **1420** may not protrude above one or more of indentations **1580**. As an example, in another embodiment, ribs **1420** may protrude above indentations **1583**, while the length of one or more of ribs **1420** may end at the interface with one or more of indentations **1581-1582**. In the same or other embodiments, one or more of indentations **1580** may completely engulf at least one portion of one or more of ribs **1420**.

Ribs **1420** can be configured to comprise a maximum width of approximately 4.5 millimeters (mm) to approximately 5 mm, and/or a maximum thickness of approximately 0.5 to approximately 1.0 mm in some embodiments. More specifically, in the present example of FIGS. **14-15**, the maximum width of ribs **1420** can be of approximately 4.8 mm, and the maximum thickness of ribs **1420** can be approximately 0.76 mm.

Ribs **1420** are non-intersected by any rib in the present example. In addition, the thickness and width of ribs **1420** blend into rib surface **1415** proximate to front surface **1416**. Such characteristics may permit ribs **1420** to better pick up or channel stresses and/or vibrations along their length for dissipation towards or throughout desired portions of body **1410** without interruption or deviation of such channeling by any intersecting rib. The blending of ribs **1420** into rib surface **1415** may also permit a reduction of stress concentration than if ribs **1420** protruded abruptly proximate to front surface **1416**. Other embodiments, however, may comprise one or more ribs that may or may not intersect all of ribs **1420**, and/or one or more of ribs **1420** that may not blend into rib surface **1415**.

In the present example, as can be seen in FIG. **15**, adjacent ribs of ribs **1420** diverge from each other towards rear surface **1517**, and converge towards each other towards front surface **1416**. Also, body **1410** comprises forward portion **1561** and rearward portion **1562**, divided by midline **1563** therebetween, where midline **1563** lies generally parallel to front surface **1416** at substantially one-half the distance between a forwardmost point of front surface **1416** and a rearwardmost point of rear surface **1517**. In the present example, the front end of each of ribs **1422-1425** lies at forward portion **1561**, while the rear end of each of ribs **1422-1425** lies at rearward portion **1562**. There can be examples where all of ribs **1420** comprise front ends at forward portion **1561** and rear ends at rearward portion **1562**. Also, in the present example, ribs **1420** are located such that their collective center of gravity is located between the center of gravity of golf club head **140** and rear surface **1517**. In the same or other examples, the center of gravity of each of ribs **1420** may be located between the center of gravity of golf club head **140** and rear surface **1517**. As a result, ribs **1420** may beneficially displace the center of gravity of golf club head **140** rearwards from where it would have otherwise been for better impact and launch characteristics.

The embodiment of FIGS. **14-15** also present a target strike zone **1431** at front surface **1416**, configured to be the desired point of impact with a golf ball under most circumstances. In the present example, longitudinal axis **1523** of rib **1423** is substantially perpendicular to strike face **1430**, and is aligned with a center of target strike zone **1431**. Target strike axis **1533** extends substantially perpendicular to strike face **1430**, from a center of target strike zone **1431**, where common point **1550** is located along target strike axis **1533** in the present embodiment such that ribs longitudinal axes **1521-1525** of ribs **1421-1425** intersect each other along target strike axis **1533**. Rib longitudinal axis **1523** can be collinear with target strike axis **1533**.

As seen in FIG. **15**, common point **1550** is separated from target strike zone **1431** by distance **1571** comprising approximately a radius of golf ball **1570**. In some examples, distance **1571** may be of approximately 21.3 mm, and/or tailored with respect to the radius of a golf ball compliant with the rules of the United States Golf Association (USGA). Currently, the USGA requires conforming golf balls to have a diameter of not less than 1.680 inches (42.67 mm). In other examples, common point **1550** may be separated from target strike zone **1431** by a different distance, such as a distance of a golf ball diameter, instead.

In the present example, golf club head **140** comprises sole weight **1590** located at least partially at sole **1413**. Sole weight **1590** is situated at a lowermost portion of sole **1413**, so as to more effectively lower the center of gravity of golf club head **140**, and the perimeter of sole weight **1590** can be contoured to fill-in the volume of such lowermost portion of sole **1413**. In the same or other examples, sole weight **1590** comprises a single piece of material with sole **1413** in the present example, but there may be other examples where sole weight **1590** may comprise a different material or piece than sole **1413**, and/or where sole weight **1590** may be affixed to sole **1413** via a mechanical or chemical fastener such as via an adhesive, one or more screws, welding, and/or brazing, among others. As shown in FIG. **15**, sole weight **1590** may at least partially engulf one or more ribs of ribs **1420**, such as ribs **1423-1424**. In the same or other examples, the thickness of sole weight **1590** can engulf a thickness of one or more portions of the engulfed ribs, such as seen with respect to the portions of ribs **1423-1424** that become subsumed into the thickness of sole weight **1590**.

Skipping ahead in the figures, FIG. **17** illustrates a top cross-sectional view of golf club head **170**. In the present example, club head **170** is similar to golf club head **140** (FIGS. **14-15**), and comprises ribs **1721-1725** similar to ribs **1421-1425** (FIGS. **14-15**). Ribs **1721-1725** are located at rib surface **1715**, which is devoid of features such as weight **1590** and indentations **1581-1583** that could otherwise engulf one or more portions of ribs **1721-1725**. There can be other examples, however, where one or more indentations like indentations **1581-1583**, and/or one or more weights like weight **1590**, could be located at rib surface **1715**.

Backtracking through the figures, FIG. **16** illustrates a flowchart of a method **1600** for providing a golf club head. In some examples, the golf club head can be similar to one or more of the golf club heads previously described, such as golf club head **12** (FIGS. **1-3**), golf club head **412** (FIGS. **4-5**), golf club head **1012** (FIGS. **10-11**), golf club head **1212** (FIGS. **12-13**), golf club head **140** (FIGS. **14-15**), and/or variations thereof.

Block **1610** of method **1600** comprises providing a body of the golf club head with a heel end, a toe end, a sole, a front surface, and a rear surface. As an example, with respect to the embodiment of FIGS. **14-15**, the body can be similar to body **1410**, the toe end can be similar to toe end **1412**, the heel end can be similar to heel end **1411**, the sole can be similar to sole **1413**, the front surface can be similar to front surface **1416**, and the rear surface can be similar to rear surface **1517**. Corresponding associations are envisioned for other golf club heads taught herein, or variations thereof.

Block **1620** of method **1600** comprises providing a plurality of ribs protruded from a rib surface of the body. As an example, with respect to the embodiment of FIGS. **14-15**, the rib surface can be similar to rib surface **1415**, and the plurality of ribs can be similar to a plurality of ribs **1420**. For instance, the plurality of ribs may comprise a subset of ribs **1421-1425**. Corresponding associations can be made with respect to ribs of the other golf club heads taught herein, or variations thereof. In some embodiments, at least a subset of the plurality of ribs may intersect at a common point external to the body, such as illustrated with respect to common point **1550** located forward of front surface **1416** in FIG. **15**, for example. There can be other examples, however, where common point need not be located forward of the front surface of the body. In addition, the plurality of ribs may comprise a single piece of material with the rib surface, or may be attached thereto via a mechanical or chemical fastener.

In some examples, providing the plurality of ribs in block **1620** can comprise providing the rib surface and the plurality of ribs internal to the body; and/or providing the plurality of ribs at the sole of the body. In other examples, the plurality of ribs may be external to the body instead, and/or the plurality of ribs may be provided elsewhere, such as at a crown of the body, and/or at a skirt portion of the body.

There can be examples where different blocks of method **1600** can be combined into a single block or performed simultaneously, and/or the sequence of such blocks can be changed. For example, blocks **1610-1620** may be performed simultaneously, such as by forming the plurality of ribs integrally with the rib surface, where the rib surface comprises one or more portions of one or more parts of the body of the club head. There can also be examples where method **1600** can comprise further or different blocks. As an example, method **1600** can comprise another block for providing a weight similar to sole weight **1590** (FIG. **15**), where such weight could engulf one or more portions of one or more of the plurality of ribs of block **1620**. Other variations can be implemented for method **1600** without departing from the scope of the present disclosure.

Moving along, FIG. **18** illustrates a top cross-sectional view of golf club head **180**. Skipping ahead in the figures, FIG. **21** illustrates a side view of golf club head **180** at address. Golf club head **180** comprises several ribs, and is similar in many respects to other golf club heads presented herein, such as golf club head **12** (FIGS. **1-4**), golf club head **140** (FIGS. **14-15**), and golf club heads **170** (FIG. **17**). Golf club head **180** comprises ribs **1820** in a staggered pattern including ribs **1821-1825** that protrude from rib surface **1815**. Rib surface **1815** can be similar to rib surface **1415** (FIGS. **14-15**), but is defined by the extension of ribs **1820** and the space therebetween. In the present example, ribs **1820** comprise a single piece of material with rib surface **1815**, but there may be other embodiments where ribs **1820** need not be integral with rib surface **1815** and could be secured thereto via one or more mechanical, chemical, or other fasteners. Although ribs **1820** are shown in FIG. **18** as straight ribs, there can be embodiments with corresponding curved rib(s) that can still exhibit the staggered pattern characteristics described herein. In such embodiments, the curved rib(s) can curve similar to the ribs in FIGS. **4**, **6**, and/or **9**, among other configurations.

Golf club head **180** comprises body **1810** having heel end **1811**, toe end **1812**, sole **1813**, crown **1814**, front surface **1416**, (comprising strike face **1430** and target strike zone **1431**, as seen in FIG. **14**), and rear surface **1817**. Golf club head **180** also comprises loft plane **2170** (FIG. **21**), which is tangent to a strikeface centerpoint of strikeface **1430**. In some examples the strikeface centerpoint can be located at a center of target strike zone **1431** (FIG. **14**), and/or may be defined in accordance with the definition of a golf governing body such as the United States Golf Association (USGA). For example, a strikeface centerpoint can be determined in accordance with Section 6.1 of the USGA's Procedure for Measuring the Flexibility of a Golf Clubhead (USGA-TPX3004, Rev. 1.0.0, May 1, 2008) (available at http://www.usga.org/equipment/testing/protocols/Procedure-For-Measuring-The-Flexibility-Of-A-Golf-Club-Head/).

Golf club head **180** can be configured such that, when it is at address, with the vertical component of shaft axis **2195** orthogonal to ground flat surface **2190** as seen in FIG. **21**, loft plane **2170** intersects ground flat surface **2190** along front intersection line **1891**, from which front plane **1890** extends orthogonal to ground flat surface **2190**. In some examples relative distances of ribs **1820** can be measured with respect to front plane **1890** or loft plane **2170**.

In the present example, rib surface **1815** is located at sole **1813** and skirt portion **1818**, and is internal to body **1810**, such that ribs **1820** are also internal to body **1810**. Ribs **1821-1823** are located at least partially at sole **1813** in the present example, and extend into skirt portion **1818** along with ribs **1824** and **1825** to reinforce one or more sections of skirt portion **1818**. In the same or other examples, such extension of at least some of ribs **1820** into skirt portion **1818** can adjust the impact sound of golf club head **180** to a desired level or frequency. There also can be other examples where rib surface **1815** can be located elsewhere in body **1810**, such as at crown **1814**, and/or where rib surface **1815** can be located only at sole **1813** or only at skirt portion **1818**. Rib surface **1815** also can be located at an exterior of body **1810**, and can be visible from the exterior of body **1810** in some implementations, such that ribs **1820** would instead protrude towards the exterior of body **1810**.

Ribs **1820** of golf club head **180** are similar to other ribs presented herein, such as ribs **34** of golf club head **12** (FIGS. **1-3**), ribs **440** of golf club head **412** (FIGS. **4-5**), ribs **640** of golf club head **612** (FIGS. **6-7**), ribs **840** of golf club head **812** (FIGS. **8-9**), ribs **1040** of golf club head **1012** (FIG. **10**), ribs **1240** of golf club head **1212** (FIGS. **12-13**), ribs **1420** of golf club head **140** (FIGS. **14-15**), and/or the ribs of golf club head **170** (FIG. **17**), regardless of whether such ribs are located at the crown, sole, skirt, or other portions of their respective golf club heads. In the present example, ribs **1821-1825** are aligned in a staggered pattern with respect to front surface **1416**, front plane **1890**, and/or relative to loft plane **2170** (FIG. **21**).

Ribs **1820** comprise five ribs (i.e., ribs **1821-1825**) in the present implementation. Rib **1821** comprises rib end **18211** and rib end **18212** opposite rib end **18211**, where rib axis **1851** extends through rib ends **18211-18212**. Rib **1822** comprises rib end **18221** and rib end **18222** opposite rib end **18221**, where rib axis **1852** extends through rib ends **18221-18222**. Rib **1823** comprises rib end **18231** and rib end **18232** opposite rib end **18231**, where rib axis **1853** extends through rib ends **18231-18232**. Rib **1824** comprises rib end **18241** and rib end **18242** opposite rib end **18241**, where rib axis **1854** extends through rib ends **18241-18242**. Rib **1825** comprises rib end **18251** and rib end **18252** opposite rib end **18251**, where rib axis **1855** extends through rib ends **18251-18252**. There can be other embodiments, however, where ribs **1820** can comprise more or less than five ribs. For example, in one such embodiment, ribs **1820** can comprise a subset of ribs **1821-1825**, such as only ribs **1821-1823**, or such as only ribs **1821**, **1824**, and **1825**. As another example, in another

embodiment, ribs **1820** can comprise further ribs, which may be interspersed proximate or between two or more of ribs **1821**-**1825**.

In the current embodiment, rib **1821** is located between ribs **1822** and **1823**; rib **1822** is located between rib **1821** and rib **1824**; and rib **1823** is located between rib **1821** and rib **1825**. Ribs **1820** are aligned such that rib **1822** is located between rib **1821** and toe end **1812** of body **1810**, and such that rib **1823** is located between rib **1821** and heel end **1811** of body **1810**. As can be seen in FIG. **8**, ribs **1821**-**1823** are non-intersected by any other rib or each other, although there can be other embodiments where at least some ribs of ribs **1820** can be intersected by other ribs.

Rib **1821** is aligned such that, from the top view perspective of FIG. **18**, rib axis **1851** is substantially orthogonal relative to front plane **1890** and substantially aligned with target strike zone **1431** (FIG. **14**). There can be other embodiments, however, where rib axis **1851** need not be substantially orthogonal to front plane **1890** and/or where rib axis **1851** need not be substantially aligned with target strike zone **1431**, depending on the desired configuration and/or based on the area(s) of body **1810** of golf club head **180** needing reinforcement by ribs **1820**.

Ribs **1820** also comprise different lengths relative to each other in the present example. For instance, in the present example, rib **1821** comprises a rib length of approximately 64 mm from rib end **18211** to rib end **18212**, rib **1822** comprises a rib length of approximately 70 mm from rib end **18221** to rib end **18222**, rib **1823** comprises a rib length of approximately 51 mm from rib end **18231** to rib end **18232**, rib **1824** comprises a rib length of approximately 38 mm from rib end **18241** to rib end **18242**, and rib **1825** comprises a rib length of approximately 32 mm from rib end **18251** to rib end **18252**. In the present example, the rib length of rib **1822** is greater than the rib length of rib **1823** and greater than the rib length of rib **1821**. There can be other embodiments, however, where the rib length of rib **1821** can be greater than the rib length of ribs **1822**-**1823**, and/or where the rib lengths of ribs **1822**-**1823** can be substantially equal to each other.

In some examples, rib lengths for straight ribs, such as ribs **1820**, can range individually between approximately 20 mm to approximately 130 mm. In other examples having curved rib(s), such as those having rib(s) with curvature(s) similar to those of the ribs in FIG. **4**, **6** or **9**, the rib length for individual ribs can range between approximately 20 mm to approximately 205 mm. In addition, each of ribs **1820** comprises a rib width of approximately 3 mm, but there can be other embodiments where individual rib widths can be of up to approximately 10 mm, where the rib widths can be non-uniform along their rib lengths, and/or where the rib widths can be unique relative to other ribs. Furthermore, each of ribs **1820** comprise a rib height of approximately 3 mm, but there can be other embodiments where individual rib heights can be of up to approximately 10 mm, where the rib heights can be non-uniform along their rib lengths, and/or where the rib heights can be unique relative to other ribs.

Rib axis **1851** comprises distance **18511** between front plane **1890** and rib end **18211**. Similarly, rib axis **1852** of rib **1822** comprises distance **18521** between front plane **1890** and rib end **18221**, while rib axis **1853** of rib **1823** comprises distance **18531** between front plane **1890** and rib end **18231**. In addition, rib axis **1854** of rib **1824** comprises distance **18541** between front plane **1890** and rib end **18241**, while rib axis **1855** of rib **1825** comprises distance **18551** between front plane **1890** and rib end **18251**. In the present example, distance **18511** can be of approximately 32 mm, distance **18521** can be of approximately 20 mm, distance **18531** can be of approximately 20 mm, distance **18541** can be of approximately 34 mm, and distance **18551** can be of approximately 36 mm. There can also be examples where distances **18511**, **18521**, **18531**, **18541**, and/or **18551** can vary within 15% of the numbers listed above. Although distances **18511**, **18521**, **18531**, **18541**, and **18551** represent distances between ribs **1820** and front plane **1890**, corresponding distances between ribs **1820** and one or both of front surface **1416** or loft plane **2170** (FIG. **21**) can be similar to such distances **18511**, **18521**, **18531**, **18541**, and/or **18551** in the same or other examples.

As can be seen in FIG. **18**, distance **18511** of rib **1821** is greater than distance **18521** of rib **1822**, and greater than distance **18531** of rib **1823**, such that rib **1821** is further separated from front plane **1890** than either of ribs **1822**-**1823**, thus yielding a staggered pattern therebetween. Although in the present embodiment distance **18531** of rib **1823** is approximately equal to distance **18521** of rib **1822**, there can be other embodiments where distances **18521** and **18531** can substantially differ from each other.

In addition, in the present embodiment, distance **18541** of rib **1824** is different than distance **18521** of rib **1822**, and different than distance **18511** of rib **1821**. For example, distance **18541** is greater than distance **18521** and can be greater than distance **18511** in the present example, although there can be examples where distance **18541** is greater than only one of distance **18521** or distance **18511**. In addition, there can be other embodiments where distance **18541** can differ from only one of distance **18521** or distance **18511**.

Similarly, in the present embodiment, distance **18551** of rib **1825** is different than distance **18531** of rib **1823**, and different than distance **18511** of rib **1821**, For example, distance **18551** is greater than distance **18531** and greater than distance **18511** in the present example, though there can be examples where distance **18551** is greater than only one of distance **18531** or distance **18511**. In addition, there can be other embodiments where distance **18551** can differ from only one of distance **18531** or distance **18511**. Distances **18541** and **18551** can be similar or equal to each other in the present or other embodiments.

Ribs **1820** are also aligned in the present embodiment to intersect, with respect to the top view of FIG. **18**, at common point **1850** external to body **1810**. In some examples, such alignment may be similar to that of ribs **34** with respect to common point **40** (FIG. **1**), and/or ribs **1420** with respect to common point **1550** (FIG. **15**). Although each of ribs **1820** intersects at common point **1850** in the present example, there can be other implementations where ribs **1822**-**1823** do not intersect at common point **1850**, or where ribs **1824**-**1825** do not intersect at common point **1850**. Common point **1850** is located forward of front surface **1416**, at a distance of approximately a golf ball radius as described above with respect to common point **1550** (FIG. **15**). There can be other embodiments, however, where common point **1850** can be otherwise distanced from front surface **1416**, and/or where common point **1850** can be located at front surface **1416**.

In the present example, ribs **1820** are aligned in a staggered pattern with respect to common point **1850**, where the distances between common point **1850** and ribs **1820** vary depending on the rib. For example, rib axis **1851** of rib **1821** comprises extended distance **18512** from common point **1850** to rib end **18211**, rib axis **1852** of rib **1822** comprises extended distance **18522** from common point **1850** to rib end **18221**, rib axis **1853** of rib **1823** comprises extended distance **18532** from common point **1850** to rib end **18231**, rib axis **1854** of rib **1824** comprises extended distance **18542** from common point **1850** to rib end **18241**, and rib axis **1855** of rib **1825** comprises extended distance **18552** from common point

1850 to rib end 18251. Extended distance 18512 of rib 1821 is greater than extended distance 18522 of rib 1822, and greater than extended distance 18532 of rib 1823, thus yielding a staggered pattern. In the present embodiment, extended distance 18512 can be of approximately 44 mm, extended distance 18522 can be of approximately 33 mm, extended distance 18532 can be of approximately 33 mm, extended distance 18542 can be of approximately 51 mm, and extended distance 18552 can be of approximately 50 mm. There can also be examples where distances 18512, 18522, 18532, 18542, and/or 18552 can vary within 15% of the numbers listed above.

FIG. 19 illustrates a top cross-sectional view of golf club head 190. Golf club head 190 is similar to golf club head 180 (FIG. 18), but comprises ribs 1920 staggered in a different pattern than ribs 1820 of golf club head 180. For example, ribs 1920 comprise ribs 1921, 1822, 1823, 1924, and 1925, where ribs 1921, 1924, and 1925 are respectively similar to ribs 1821, 1824, and 1825 of ribs 1820 (FIG. 18), but exhibit different respective rib lengths and respective distances from front plane 1890 than ribs 1821, 1824, and 1825. In particular, rib 1921 extends to front wall 1835 in the present example, such that distance 19511 between front plane 1890 and rib end 19211 of rib 1921 can be similar to the thickness of front wall 1835 at its intersection with rib 1921. Accordingly, distance 19511 of rib 1921 is less than distance 18521 of rib 1822 and less than distance 18531 of rib 1823. In other embodiments, rib 1921 does not extend all the way to front wall 1835, but can still extend closer thereto such that distance 19511 is still less than distance 18521 of rib 1822 and/or less than distance 18531 of rib 1823.

In the present implementation, rib 1921 comprises a rib length of approximately 88 mm from rib end 19211 to rib end 18212, rib 1822 comprises a rib length of approximately 70 mm from rib end 18221 to rib end 18222, rib 1823 comprises a rib length of approximately 51 mm from rib end 18231 to rib end 18232, rib 1924 comprises a rib length of approximately 53 mm from rib end 19241 to rib end 18242, and rib 1925 comprises a rib length of approximately 58 mm from rib end 19251 to rib end 18252. There can also be examples where the rib lengths of ribs 1920 can vary within 15% of the numbers listed above. In addition, each of ribs 1920 comprise substantially a rib width of approximately 3 mm, but there can be other embodiments where such the rib widths can vary within 15% of the rib width listed above, and/or where the rib widths can be non-uniform or unique.

Ribs 1924 and 1925 of ribs 1920 are closer in the present example to front plane 1890 than corresponding ribs 1824 and 1825 of ribs 1820 (FIG. 18). In view of this difference, distance 19541, which extends from front plane 1890 to rib end 19241 of rib 1924, is shorter than distance 18521 of rib 1822. Similarly, distance 19551, which extends from front plane 1890 to rib end 19251 of rib 1925, is shorter than distance 18531 of rib 1823. In the present example, distances 19541 and 19551 are substantially different from each other, but can be approximately equal to each other in other embodiments. The differences between distances 19511, 18521, 18531, 19541, and 19551 described above generate a staggered pattern for ribs 1920 that places ribs 1921, 1924, and 1925 closer to the front of golf club head 190 than ribs 1822 and 1823, where such staggered pattern is thus different than that described above with respect to ribs 1820 in FIG. 18, where ribs 1822 and 1823 are closer to the front of the golf club head than ribs 1821, and 1824, and 1825.

Consistent with the above, in the present example, distance 19511 can be of up to approximately 9 mm, distance 18521 can be of approximately 20 mm, distance 18531 can be of approximately 20 mm, distance 19541 can be of approximately 18 mm, and distance 19551 can be of approximately 10 mm. There can also be examples where distances 19511, 18521, 18531, 19541, and/or 19551 can vary within 15% of the numbers listed above. Although distances 19511, 18521, 18531, 19541, and 19551 represent distances between ribs 1920 and front plane 1890, corresponding distances between ribs 1920 and one or both of front surface 1416 or loft plane 2170 (FIG. 21) can be similar to such distances 19511, 18521, 18531, 19541, and/or 19551 in the same or other examples.

In the present example of FIG. 19, ribs 1920 are also aligned in a staggered pattern with respect to common point 1850, where the distances between common point 1850 and ribs 1920 vary depending on the rib. For example, rib axis 1851 of rib 1921 comprises extended distance 19512 from common point 1850 to rib end 19211, rib axis 1852 of rib 1822 comprises extended distance 18522 from common point 1850 to rib end 18221, rib axis 1853 of rib 1823 comprises extended distance 18532 from common point 1850 to rib end 18231, rib axis 1854 of rib 1924 comprises extended distance 19542 from common point 1850 to rib end 19241, and rib axis 1855 of rib 1925 comprises extended distance 19552 from common point 1850 to rib end 19251. Extended distances 18522 and 18532 can be greater than extended distances 19512, 19542, and 19552, thus yielding a staggered pattern with respect to common point 1850. In the present embodiment, extended distance 19512 can be of approximately 22 mm, extended distance 18522 can be of approximately 33 mm, extended distance 18532 can be of approximately 33 mm, extended distance 19542 can be of approximately 36 mm, and extended distance 19552 can be of approximately 24 mm. There can also be examples where distances 19512, 18522, 18532, 19542, and/or 19552 can vary within 15% of the numbers listed above

As can be seen in FIGS. 18-19 golf club heads 180 and 190 have one or more indentation features 1880 which can be similar to indentations 1580 as described above with respect to golf club head 140 (FIGS. 14-15). Indentation features 1880 comprise indentations 1881-1885 distributed throughout different sections of sole 1813 and skirt portion 1818, where at least some of indentation features 1881-1885 can define logos or other designs to decorate and/or to strengthen or reinforce one or more sections of the portion of body 1810 where they are located. Indentations 1880 protrude into the interior of golf club head 180 in the present example, appearing embossed or corrugated from the exterior of golf club head 180, and some of them intersect with ribs 1820 along their respective rib lengths. Accordingly, portions of some ribs 1820 may be at least partially engulfed by indentation features 1880. For example, rib 1821 intersects with, and is partially engulfed by, indentation features 1881, 1882 and 1885 at sole 1813 and skirt portion 1818. Similarly, indentation feature 1885 is intersected by ribs 1822, 1823, and 1825. In addition, indentation feature 1883 is intersected by rib 1823. Not all indentation features 1880, however, need to be intersected by ribs 1820. For example indentation feature 1884 at sole 1813 and skirt portion 1818 is not in contact with any of ribs 1820, and rib 1824 does not intersect any of indentation features 1880.

As mentioned above, the embossed or corrugated configuration of indentation features 1880 can be configured to strengthen or reinforce desired sections of body 1810, such as to compensate for thinner portions thereof, to prevent material failure or deformation due to stresses at impact with a golf ball or a ground surface, and/or to adjust the sound of golf club 180 upon impact with the golf ball. In the present examples of FIGS. 18-19, sole 1813 and/or skirt portion 1818

can comprise a thickness of approximately 0.7 mm. There can be some examples where the thickness of sole **1813** and/or skirt portion **1818** can vary within 15% of the number listed above, and/or where such thickness can be non-uniform across sole **1813** and/or skirt portion **1818**.

In some implementations, there may be some sections of body **1810** where it may not be desirable to place any indentation features, such as for aesthetic, design, and/or performance reasons. Such sections may thus be suitable for reinforcement via ribs **1820** rather than via indentation features **1880**. As an example, rib surface **1815** comprises clear section **1819** at skirt portion **1818**, where clear section **1819** is clear of any indentation features **1880** for design considerations. Nevertheless, by locating rib **1824** to protrude therefrom, clear section **1819** can still be reinforced with respect to strength or sound without having to rely on indentation features **1820**. FIG. **19** also comprises indentation features **1880**, which relate to sole **1813**, skirt portion **1818**, and ribs **1920** of golf club head **190** similar to the description above with respect to golf club head **180** in FIG. **18**.

FIG. **20** illustrates a flowchart of a method **2000** for providing a golf club head. In some examples, the golf club head can be similar to one or more of the golf club heads previously described, such as golf club head **12** (FIGS. **1-3**), golf club head **412** (FIGS. **4-5**), golf club head **1012** (FIGS. **10-11**), golf club head **1212** (FIGS. **12-13**), golf club head **140** (FIGS. **14-15**), golf club head **180** (FIG. **18**), golf club head **190** (FIG. **19**), and/or variations thereof.

Block **2010** of method **2000** comprises providing a body having a heel end, a toe end, a sole, a front surface, and a rear surface. In some examples, the body can be similar to body **1810** of golf club heads **180** (FIG. **18**) or **190** (FIG. **19**). The heel end, the toe end, the sole, and the front surface can be respectively similar to heel end **1811**, toe end **1812**, sole **1813**, and front surface **1416** (FIGS. **18-19**).

Block **2020** of method **2000** comprises providing a plurality of ribs protruded from a rib surface of the body in a staggered pattern. In some examples, the plurality of ribs can be similar to ribs **1820** (FIG. **18**), ribs **1920** (FIG. **19**), or variations thereof. The plurality of ribs can comprise first second, and third ribs, which can be similar to ribs **1821**, **1822**, and/or **1823** of FIG. **18**, or to ribs **1921**, **1822**, and/or **1823** of FIG. **19**. In some embodiments, the plurality of ribs can also comprise fourth and fifth ribs, which can be similar to ribs **1824** and/or **1825** of FIG. **18**, or to ribs **1924** and/or **1925** of FIG. **19**. Some embodiments may comprise more or less ribs, depending on the requirements of the golf club head at issue. In some examples, the staggered pattern for the ribs of method **2000** can be similar to one or more of the staggered pattern options described above with respect to ribs **1820** (FIG. **18**) and/or ribs **1920** (FIG. **19**).

Method **2000** can also optionally comprise block **2030** for providing one or more indentation features at the rib surface from where the plurality of ribs protrude. In some examples, the indentation features can be similar to indentation features **1880** (FIGS. **18-19**) or variations thereof. Some of such indentation features may be intersected by one or more of the plurality of ribs of block **2020**. In the same or other examples, the rib surface may comprise a clear section that does not have any indentation features, but that may be reinforced nevertheless by one or more of the plurality of ribs. In some examples, the clear section may be similar to clear section **1819**, which is reinforced as described above with respect to FIGS. **18-19**.

There can be examples where different blocks of method **2000** can be combined into a single block or performed simultaneously, and/or the sequence of such blocks can be changed. For example, blocks **2010** and **2020** may be performed simultaneously, such as by forming the plurality of ribs integrally with the rib surface, where the rib surface comprises one or more portions of one or more parts of the body of the club head. There can also be examples where method **2000** can comprise further or different blocks. As an example, method **2000** can comprise another block for providing a weight similar to sole weight **1590** (FIG. **15**), where such weight can be attached to one or more of the indentation features of block **2030**, and/or could engulf one or more portions of one or more of the plurality of ribs of block **2020**. Other variations can be implemented for method **2000** without departing from the scope of the present disclosure.

Moving along, FIG. **22** illustrates a front view of golf club head **22000** comprising body **21200** and ribs **22200** coupled thereto. FIG. **23** illustrates a top X-Ray view of golf club head **22000**. In the present example, body **21200** comprises heel end **22160**, toe end **22150**, crown **22110**, sole **22120**, skirt **22130**, front end **22140**, rear end **23150**, and hosel **22190**, but there can be other examples with more or less sections. Golf club head **22000** and ribs **22200** can be similar to other golf club heads and ribs described herein, and ribs **22200** can be arranged or structured with respect to one or more oscillation amplitude zones of body **21200**. A golf club shaft **22191** can be coupled to hosel **22190**.

Ribs **22200** comprise ribs **22210**, **22220**, and **22230** in the present embodiment, where rib **22220** extends along crown **22110**, where rib **22230** extends along sole **22120**, and where rib **22210** extends continuously from crown **22110** to sole **22120** of golf club head **22000** and in the present example, also extends along skirt **22130** between crown **22110** and sole **22120**.

There can be other examples with more or less ribs arranged or structured with respect to more or less oscillation amplitude zones, however.

Exemplary details of ribs **22200** can be ascertained through the figures. FIG. **23** shows an X-ray outline of ribs **22200** at crown **22110** and sole **22120** FIG. **24** shows a bottom-up interior view of crown **22110**, showing rib **22220** and a crown portion of rib **22210**. FIG. **25** shows a top-down interior view of sole **22120** and skirt **22130**, showing rib **22230** and a crown and skirt portion of rib **22210**. FIG. **26** illustrates a side view of rib **22210** with respect to a cross-sectional view of golf club head **22000** along line XXVI-XXVI of FIG. **23**. FIG. **27** illustrates a side view of rib **22220** with respect to a cross-sectional view of golf club head **22000** along line XXVII-XXVII of FIG. **23**. FIG. **28** illustrates a side view of rib **22230** with respect to a cross-sectional view of golf club head **22000** along line XXVIII-XXVIII of FIG. **23**. As can be seen in FIGS. **24-28**, ribs **22200** protrude from rib surface **24200** of body **22100**, where rib surface **24200** comprises portions of crown **22110**, sole **22120**, and/or skirt **22130** in the present embodiment.

Ribs **22200** can be configured to vary at least one dimension thereof with respect to one or more high oscillation amplitude zones of body **22100**. In some implementations, the location of one or more high amplitude zones can be determined via finite element analysis (FEA) map of a model of body **22100** of golf club head **22000**, generated via one or more FEA analysis tools such as, for example Creo Elements from PTC, Inc. (Needham, Mass., USA). For instance, FIG. **29** illustrates a top FEA view of crown **22110**, identifying high amplitude zones **29101**, **29102**, and **29107** as part of high amplitude zones **29100**. FIG. **30** illustrates a bottom FEA view of sole **22120**, identifying high amplitude zones **30103**, **30104**, **30105**, and **30106** as part of high amplitude zones **29100**.

High amplitude zones **29100** can comprise locations at body **22100** that can exhibit higher oscillation amplitudes than other sections of body **22100** following a golf shot impact. For example, high amplitude zones **29100** can correspond to locations at body **22100** that exhibit oscillation amplitudes of approximately 0.5 mm to approximately 4 mm following impact of golf club head **22000** with golf ball **1570** at impact speeds of approximately 25 m/s (meters per second) to approximately 70 m/s. In the same or other examples, high amplitude zones **29100** can be defined with respect to the oscillation amplitudes due to oscillations at one or more frequencies of approximately 1000 Hz (Hertz) to approximately 5000 Hz.

There can be situations where high amplitude zones can generate undesirable sound frequencies upon impact, and/or where structural integrity of golf club head **22000** can be compromised at such high amplitude zones due to, for example, reduced body material thickness(s) thereat. Ribs **22200** can thus be arranged in such situations to provide structural reinforcement to body **22100** while still attenuating such sound frequencies. For instance, rib **22210** is arranged to extend along high amplitude zones **30105** and **30106** (FIG. **30**) at sole **22120** and/or skirt **11130**, and along high amplitude zones **29101** and **29107** (FIG. **29**) at crown **22110**. Rib **22220** is arranged to extend along high amplitude zone **29102** (FIG. **29**) at crown **22110**. Rib **22230** is arranged to extend along high amplitude zones **30103** and **30104** (FIG. **30**) at sole **22120** and/or skirt **22130**.

Although ribs **22200** can add structural support or strength to body **22100**, additional mass at high amplitude zones **29101** can exacerbate vibrations or the amplitude of oscillations thereat. Accordingly, in the present example, ribs **22200** extend along respective portions of body **22100**, but vary in dimension such that at least a rib height or a rib thickness thereof decreases when extending along one or more of high amplitude zones **29100**. In some examples, the rib height can be measured from, and substantially orthogonal to, rib surface **24200**. For instance, rib **22210** comprises heights **26015** and **26012** (FIG. **26**), which can be up to approximately 6 mm in some embodiments, and where at least one of rib heights **26015** or **26012** can comprise a maximum rib height of rib **22210**. In the same or other examples, the rib thickness can be measured substantially orthogonal to the rib height. For instance rib **22210** comprises maximum rib thickness **25215** (FIG. **25**), which can be up to approximately 4 mm in some embodiments.

In the present example, as seen in FIGS. **25-26**, rib **22210** comprises rib ends **22211** and **22212** opposite each other. Rib **22210** also comprises rib portions **25211**, **25212**, and **25213**, where rib portion **25211** is located between rib end **22211** and rib portion **25213**, and rib portion **25212** is located between rib end **22212** and rib portion **25213**.

Rib portions **25211**, **25212**, and **25213** comprise corresponding rib dimensions, where the respective rib dimensions of rib portions **25211** and **25212** are greater than the corresponding rib dimensions of rib **25213**. For instance, as seen in FIG. **26**, rib portion **25211** comprises rib height **26011**, rib portion **25212** comprises rib height **26012**, and rib portion **25213** comprises rib height **26013**, where rib heights **26011** and **26012** are greater than rib height **26013**. Similarly, as seen in FIG. **25**, rib portion **25211** comprises rib thickness **25011**, rib portion **25212** comprises rib thickness **25012**, and rib portion **25213** comprises rib thickness **25013**, where rib thicknesses **25011** and **25012** are greater than rib thickness **25013**.

In the present embodiment, rib heights **26011**, **26012**, and **26013**, and rib thicknesses **25011**, **25012**, and **25013**, are located within rib center section **26050**, which is centered about rib centerpoint **26299** of rib **22210**, and which comprises 95% of the rib length of rib **22210**, as measured from rib end **22211** to rib end **22212**. Accordingly, rib dimensions outside rib center section **26050** are not considered with respect to determining the maximum or minimum rib height or thickness of rib **22210**.

Rib **22210** is arranged in the present embodiment such that rib portion **25213** (FIG. **25-26**) is located at high amplitude zone **30105** (FIGS. **25**, **26**, **30**). Accordingly, rib height **26013** and rib width **25013** are reduced when compared to rib heights **26011** and **26012** (FIG. **26**) and rib widths **25011** and **25012** (FIG. **25**), which are located outside high amplitude zones **29100**. High amplitude zone can comprise, for example the maximum amplitude zone with the highest golf impact oscillation amplitude out high amplitude zones **29100**. In one example, at least one of rib height **26011** or **26012** can be approximately 1.1 times to approximately 12 times greater than rib height **26013** (FIG. **26**). As another example, at least one of rib thickness **25011** or **25012** can be approximately 1.1 times to approximately 8 times greater than rib thickness **25013** (FIG. **25**). In the present embodiment, rib height **26013** (FIG. **26**) can be approximately 0.5 mm to approximately 4 mm, and can comprise a minimum rib height of rib **22210**. In the same or other embodiments, rib thickness **25013** (FIG. **25**) can be approximately 0.5 mm to approximately 3 mm, and can comprise a minimum rib thickness of rib **22210**.

In the present embodiment, rib **22210** also comprises rib portion **25214** located between rib end **22212** and rib portion **25212**, where dimensions of rib portion **25214** comprise rib height **26014** (FIG. **26**) and rib thickness **25014** (FIG. **25**). Rib portion **25214** is located at high amplitude zone **30106** and, accordingly, rib height **26014** and rib thickness **25014** are reduced when compared to rib heights and thicknesses located outside high amplitude zones **29100**. For instance, rib thickness **25012** of rib portion **25212** is greater than rib thickness **25014** of rib portion **25214** (FIG. **25**). Similarly, rib height **26012** of rib portion **25212** is greater than rib thickness **26014** of rib portion **25214** (FIG. **26**).

Rib **22210** also comprises rib portion **25215** located between rib end **22212** and rib portion **25214**, where dimensions of rib portion **25215** comprise rib height **26015** (FIG. **26**) and rib thickness **25015** (FIG. **25**). Rib portion **2521** is located outside high amplitude zones **29100** and, accordingly, rib thickness **25015** of rib portion **25215** is greater than rib thickness **25014** of rib portion **25214** (FIG. **25**). Similarly, rib height **26015** of rib portion **25215** is greater than rib thickness **26014** of rib portion **25214** (FIG. **26**).

A similar pattern results for the portions of rib **22210** located at crown **22110**. For instance, as seen in FIG. **24**, rib **22210** also comprises rib portions **24216**, **24217**, **24218**, and **24219**, where rib portion **24216** is located at high amplitude zone **29107**, where rib portion **24218** is located at high amplitude zone **29101**, and where rib portions **24217** and **24219** are located outside high amplitude zones **29100**. Accordingly, the rib thickness(es) of rib portions **24217** or **24219** can be greater than the rib thickness(es) of rib portions **24216** or **24218**. In the same or other examples, the rib height(s) of rib portions **24217** or **24219** can be greater than the rib height(s) of rib portions **24216** or **24218**.

The dimensions of ribs **22230** and **22220** can be arranged in accordance with the description above with respect to rib **22210** based on the locations of high amplitude portions **29100**. For instance, as seen in FIGS. **24** and **27**, rib **22220** comprises rib portions **22221**, **22222**, and **22223**, where rib portion **22223** is located at high amplitude zone **29102**, and where rib portions **22221** and **22222** are located outside high

amplitude zones **29100**. Accordingly, the rib thicknesses of rib portions **22221** and **22222** can be greater than the rib thickness of rib portion **22223**. In the same or other examples, the rib heights of rib portions **22221** or **22222** can be greater than the rib height of rib portion **22223**.

As another example, instance, as seen in FIGS. **25** and **28**, rib **22230** comprises rib portions **22231**, **22232**, **22233**, **22234**, and **22235**, where rib portion **22233** is located at high amplitude zone **30104**, where rib portion **22234** is located at high amplitude zone **30103**, and where rib portions **22231**, **22232**, and **22235** are located outside high amplitude zones **29100**. Accordingly, the rib thickness(es) of rib portions **22231**, **22232**, or **22235** can be greater than the rib thickness(es) of rib portions **22233** or **22234**. In the same or other examples, the rib height(s) of rib portions **22231**, **22232**, or **22235** can be greater than the rib height(s) of rib portions **22233** or **22234**.

As seen in FIG. **23**, rib **22210** comprises rib axis **22213**, rib **22220** comprises rib axis **22223**, and rib **22230** comprises rib axis **22233**, where rib axes **22213**, **22223**, and **22233** can be aligned such as to intersect each other and locus **23500** forward of front end **22140** of body **22100**, and where locus **23500** is defined in the present example by conic section perimeter **23510**. In the same or other examples, rib axes **22213**, **22223**, and/or **22233** can be tangent to conic section perimeter **23510**. Conic section perimeter **23510** comprises the size of a perimeter of golf ball **1570** in the present example, but can comprise other conic section shapes or locations such as described below with respect to the conic section perimeters of FIGS. **32-39**.

FIG. **31** presents a flowchart of method **31000** for providing a golf club head in accordance with the present disclosure. In some examples, the golf club head of method **31000** can be similar to one or more of the golf club heads presented herein, such as golf club head **22000** (FIGS. **22-30**).

Method **31000** comprises block **31100** for providing a body of the golf club head, the body comprising a heel end, a toe end, a crown, a sole, a front end, a rear end, and at least one of a skirt or a hosel. In some examples, the body of the golf club head can be similar to body **22100** of golf club head **22000**, comprising heel end **22160**, toe end **22150**, crown **22110**, sole **22120**, a front end **22140**, rear end **23150**, skirt **22130**, and/or hosel **22190** (FIGS. **22-30**).

Method **31000** also comprises block **31200** for providing a rib of one or more ribs protruding from a rib surface of the body and comprising first, second, and third rib portions. In some examples, the rib can be similar to one or more of ribs **22210**, **22220**, or **22230** (FIGS. **22-28**). In the same or other examples, the rib surface can be similar to rib surface **24200** and can comprise one or more portions of the body of the golf club head, such as a portion of the crown, a portion of the sole, and/or a portion of the skirt thereof.

Block **31200** can comprise sub-block **31210** in some examples, where sub-block **31210** comprises providing the third rib portion between the first and second rib portions such that a first rib dimension of the first rib portion and a second rib dimension of the second rib portion are greater than a third rib dimension of the third rib portion. In some implementations, the first rib dimension can correspond to a rib height of the first rib, similar to the rib heights described above with respect to ribs **22210**, **22220**, and/or **22230**, for example. In the same or other implementations, the rib dimension can also or alternatively correspond to a rib thickness of the first rib, similar to the rib thicknesses described above with respect to ribs **22210**, **22220**, and/or **22230**, for example

The first, second and third rib portions can be similar to corresponding portions of ribs **22210**, **22220**, or **22230** in some examples. For instance, where the rib is similar to rib **22210**, the third rib portion can be similar to rib portion **25213** while the first and second rib portions can be similar to rib portions **25211** and **25212** (FIGS. **25-26**). As another example, again where the rib is similar to rib **22210**, the third rib portion can be similar to rib portion **25214** while the first and second rib portions can be similar to rib portions **25212** and **25215** (FIGS. **25-26**). As another example, again where the rib is similar to rib **22210**, the third rib portion can be similar to rib portion **24216** while the first and second rib portions can be similar to rib portions **25215** and **24217** (FIGS. **24,26**). As yet another example, again where the rib is similar to rib **22210**, the third rib portion can be similar to rib portion **24218** while the first and second rib portions can be similar to rib portions **24217** and **24219** (FIGS. **24,26**).

In a different example, where the rib is similar to rib **22220**, the third rib portion can be similar to rib portion **22223** while the first and second rib portions can be similar to rib portions **22221** and **22222** (FIGS. **24,27**). In another different example, where the rib is similar to rib **22230**, the third rib portion can be similar to rib portion **22233** while the first and second rib portions can be similar to rib portions **22231** and **22232** (FIGS. **25,28**). In yet another different example, again where the rib is similar to rib **22230**, the third rib portion can be similar to rib portion **22234** while the first and second rib portions can be similar to rib portions **22232** and **22235** (FIGS. **25,28**).

Block **31200** can also comprise sub-block **32220** in some embodiments, where sub-block **32220** comprises providing the third rib dimension of the third rib portion at a maximum amplitude zone of the body. In some examples, the maximum amplitude zone can be similar to one or more of high amplitude zones **29100** as described above with respect to FIGS. **24-30**, which can be matched with respective rib portions of reduced dimension similar to those of one or more of rib portions **25213**, **25214**, **24216**, **24218**, **22223**, **22233**, or **22234** (FIGS. **24-28**).

In some examples, one or more of the different blocks or sub-blocks of method **32000** can be combined into a single block or sub-block, or performed simultaneously, and/or the sequence of such blocks or sub-blocks can be changed. For example, blocks **31100** and **31200** can be performed simultaneously, such as where the one or more ribs are integral with the body by comprising a single piece with one or more portions of the body of the golf club head. In the same or other examples, some of the blocks of method **32000** can be subdivided into several sub-blocks. For example, block **31100** can be subdivided into a sub-block for providing the crown, sole, and/or skirt, and another sub-block for providing the front end of the body and/or a strikeface thereof. There can also be examples where method **32000** can comprise further or different blocks. As an example, a further block can comprise coupling a shaft to the hosel of the body. As another example, a further block or sub-block can comprise generating an FEA map of the body of the golf club head, and/or determining the location of the maximum amplitude zone from the FEA map. In such examples, the FEA map can be similar to the FEA maps or views of golf club head **22000** as shown in FIGS. **29-30**. In addition, there may be examples where method **32000** can comprise only part of the steps described above. For instance, sub-block **32220** can be optional in some implementations. Other variations can be implemented for method **32000** without departing from the scope of the present disclosure.

FIG. **32** illustrates a top X-Ray view of golf club head **32000** with ribs **32200**, which can be similar to other golf club heads and ribs described herein. Golf club head **32000** com-

prises body **22100** with crown **22110**, sole **22120**, heel end **22160**, toe end **22150**, front end **22140**, rear end **23150**, skirt **22130** and/or hosel **22190** as described above with respect to FIGS. **22-31**, and also comprises ribs **32200** coupled to body **22100** and protruding from rib surface **32400** thereof. As seen in FIG. **32**, hosel **22190** can have golf club shaft **22191** inserted therein. In the present example, rib surface **32400** comprises an interior surface of body **22100**, but there can be other similar embodiments where rib surface **32400** can comprise an exterior surface of body **22100**.

Ribs **32200** comprise rib **32210** and **32220** in the present embodiment. Rib **32210** comprises rib endpoints **32211** and **32212** opposite each other, and rib axis **32213** intersecting rib endpoints **32211** and **32212**. Similarly, rib **32220** comprises rib endpoints **32221** and **32222** opposite each other, and rib axis **32223** intersecting rib endpoints **32221** and **32222**. Ribs **32200** also comprise ribs **32230** and **32240** in the present embodiment, where rib **32230** comprises rib axis **32213** intersecting rib endpoints **32231** and **32232** thereof, and where rib **32240** comprises rib axis **32243** intersecting rib endpoints **32241** and **32242** thereof. Other embodiments can comprise fewer or greater number of ribs.

The top view of FIG. **32** depicts golf club head **32000** with body **22100** at address over ground plane **32710** such that shaft plane **32720**, which comprises shaft axis **32721** of shaft **22190**, is orthogonal to ground plane **32710**. As can be seen in FIG. **32**, rib axes **32213**, **32223**, **32233**, and **32243** intersect each other and also intersect locus **32500**, which is defined by conic section perimeter **32510**. In some examples, conic section perimeter **32510** can extend in a direction orthogonal to ground plane **32710** when body **22100** is at address, and locus **32500** can comprise an area or a volume bounded by conic section perimeter **32510**. Conic section perimeter **32510** comprises a circular perimeter as seen from the top view of FIG. **32** in the present embodiment, but can comprise a different conic section shape in other embodiments such as a semi-circular perimeter, an elliptical perimeter, a semi-elliptical perimeter, a parabolic perimeter, or a hyperbolic perimeter. For instance, skipping ahead in the figures, FIG. **38** illustrates a top X-Ray view of golf club head **38000** with ribs **38200** having rib axes aligned with respect to locus **38500** as defined by elliptical conic section perimeter **38510**.

Backtracking to FIG. **32**, rib axes **32213**, **32223**, **32233**, and **32243** intersect locus **32500** at conic section perimeter **32150** in the present implementation. In addition, rib axes **32213**, **32223**, **32233**, and **32243** intersect each other outside locus **32500** and forward of front end **22140** of body **22100**. There also can be embodiments where rib axes **32213**, **32223**, **32233**, and **32243** intersect locus **32500** within conic section perimeter **32150**.

Ribs **32200** can be similar to other ribs described herein for other embodiments in some respects. For example, none of ribs **32200** are intersected by any other ribs, even though rib axes **32213**, **32223**, **32233**, and **32243** intersect each other forward of front end **22140** of body **22100**. Although ribs **32200** comprise a substantially constant rib height and rib thickness, there can be other embodiments with varying rib heights and/or rib thicknesses. In such embodiments, reduced rib heights or rib thicknesses can correspond to high amplitude zones of the body of the golf club head, as described above with respect to the rib heights and/or rib thicknesses of the ribs of golf club head **22000** (FIGS. **22-31**).

Ribs **32200** are aligned with respect to locus **32500** and conic section perimeter **32510** such as to better channel or dissipate impact stresses with respect to a target stress direction from which such impact stresses may come. In the present embodiment, rib axes **32213**, **32223**, **32233**, and **32243** are tangent to conic section perimeter **32510**, where (a) rib axis **32223** is tangent to conic section perimeter **32510** at tangency point **32511**, which is located towards a heelside end of conic section perimeter **32510**, (b) rib axis **32213** is tangent to conic section perimeter **32510** at tangency point **32512**, which is located towards a toeside end of conic section perimeter **32510**, (c) rib axis **32233** is tangent to conic section perimeter **32510** at tangency point **32513**, which is located between tangency point **32511** and rearward end **32515** of conic section perimeter **32510**, and (d) rib axis **32243** is tangent to conic section perimeter **32510** at tangency point **32514**, which is located between tangency point **32512** and rearward end **32515** of conic section perimeter **32510**.

In some embodiments, the size of conic section perimeter **32510** can be configured with respect a target stress direction or area from which such impact stresses may generate forward of front end **22140**. For instance, to better align ribs **32200** with conic section perimeter **32510** relative to such target stress direction, a maximum diameter of conic section perimeter **32510**, comprising a greatest distance between any two points thereof, can be relatively small. As an example, such maximum diameter of conic section perimeter **32510** can be approximately 3 mm be to approximately 10 mm. Such alignment of ribs **32200** with respect to such small diameter of conic section perimeter **32510** can be beneficial, for instance, in the case of experienced individuals that can more consistently hit golf ball **1570** at a desired area of front end **22140** and/or which may want to align front end **22140** and/or ribs **32200** with respect to a specific zone or point of golf ball **1570**.

In other embodiments, the maximum diameter of the conic section perimeter can be greater and can comprise, for example, a golf ball diameter of a golf ball of approximately 42.67 mm (approximately 1.68 inches). For instance, FIG. **33** illustrates a top X-Ray view of golf club head **33000** with ribs **33200**, which can be similar to golf club head **32000** and ribs **32200** (FIG. **32**), such that ribs **33210**, **33220**, **33330**, and **33340** (FIG. **33**) can be respectively similar to ribs **32210**, **32220**, **32330**, and **32340** (FIG. **32**) and such that rib axes **33213**, **33223**, **33233**, and **33243** can be respectively similar to rib axes **32213**, **32223**, **32223**, **32233**, and **243** (FIG. **32**). Ribs **33200** are aligned similar to ribs **32200**, but with respect to locus **33500** as defined by conic section perimeter **33510**, which comprises the size of a perimeter of golf ball **1570**. Such alignment of ribs **33200** with respect to a larger diameter, such as the diameter of conic section perimeter **33510**, can be beneficial in the case of higher handicap individuals that may tend to hit a golf ball more inconsistently across a broader area of front end **22140**.

Returning to the example of FIG. **32**, ribs **32230** and **32240** comprise outermost ribs of ribs **32200**, being respectively located closest to toe end **22150** and heel end **22160** of body **22100**. Ribs **32210** and **322120** comprise inner ribs of ribs **32200**, being located between outermost ribs **32230** and **32240**. As seen in the present example, rib axes **32213** and **32223** of inner ribs **32210** and **32220** intersect each other forward of conic section perimeter **32510**, while rib axes **32233** and **32243** of outermost ribs **32230** and **32240** intersect each other rearward of conic section perimeter **32510**. Such an arrangement leads to relatively smaller angles between rib axes **32213** and **32233** of toeside ribs **32230** and **32210**, and between rib axes **32223** and **32243** of heelside ribs **32220** and **32240**. Accordingly, toeside ribs **32230** and **32210** can be focused to a narrower area **32141** of front end **22140**, while heelside ribs **32240** and **32220** can be focused to a narrower area **32142** of front end **22140**. In some implementations, such an alignments can thus be beneficial for more experi-

enced individuals that may want to focus their golf swings with respect to specific areas of front end **22140**, such as narrower area **32141** towards toe end **22150**, and/or narrower area **32142** towards heel end **22160**.

There can be other embodiments, however, with different rib arrangements. For example, FIG. **34** illustrates a top X-Ray view of golf club head **34000** with ribs **34200**, which can be similar to golf club head **32000** and ribs **32200** (FIG. **32**), where ribs **34230** and **34240** comprise outermost ribs of ribs **34200**, and where ribs **34210** and **34220** comprise inner ribs of ribs **34200**. As seen in the present example, rib axes **34213** and **34223** of inner ribs **34210** and **34220** intersect each other rearward of conic section perimeter **32510**, while rib axes **34233** and **34243** of outermost ribs **34230** and **34240** intersect each other forward of conic section perimeter **32510**. Such an arrangement leads to relatively greater angles between rib axes **34213** and **34233** of toeside ribs **34230** and **34210**, and between rib axes **34223** and **34243** of heelside ribs **34220** and **34240**. Accordingly, toeside ribs **34230** and **34210** are focused to a broader area **34141** of front end **22140**, while heelside ribs **32240** and **32220** are be focused to a broader area **32142** of front end **22140**. In some implementations, such an alignments can thus be beneficial for higher handicap individuals that may be more inconsistent with their golf swings with respect to specific areas of front end **22140**. Accordingly, broader area **34141** (FIG. **34**) can be greater than narrower area **32141** (FIG. **20**), and broader area **34142** (FIG. **34**) can be greater than narrower area **32142** (FIG. **32**).

As described above, the conic section perimeter for a golf club head can be aligned with respect to a target stress direction from which impact stresses are desired to be channeled or attenuated. For instance, locus **32500** and ribs **32200** in general are aligned in FIG. **32** with respect to strikeface centerpoint **32145** of strikeface **22141** for a target stress direction traversing the center of strikeface **22141**. Accordingly, when golf club head **32000** is at address as described above, conic section perimeter **32510** is centered at center plane **32730**, where center plane **32730** is orthogonal to ground plane **32710** and comprises strikeface centerpoint **32145**.

FIG. **35** illustrates another example showing a top X-Ray view of golf club head **35200** with ribs **35200** aligned with respect to a toeward location for locus **32500**. Ribs **35200** can be similar to ribs **32200** (FIG. **32**), such that ribs **35210**, **35220**, **35330**, and **35340** (FIG. **35**) can be respectively similar to ribs **32210**, **32220**, **32330**, and **32340** (FIG. **32**), but ribs **35200** are aligned with the toeward location of locus **32500**. In the present example, strikeface **22141** comprises strikeface toe end **35147** and strikeface toe-end point **35146** between strikeface centerpoint **32145** and strikeface toe end **35147**. Toe-end plane **35730**, which comprises strikeface toe-end point **35146**, is parallel to center plane **32730**. Ribs **35200** are aligned with conic segment perimeter **32510**, which is centered at toe-end plane **35730** to address a target stress direction traversing the toe portion of strikeface **22141**. In the same or other examples, strikeface toe-end point **35146** can be located midway between strikeface centerpoint **32145** and strikeface toe end **35147**.

As another example, FIG. **36** illustrates a top X-Ray view of golf club head **36200** with ribs **36200** aligned with respect to a heelward location for locus **32500**. Ribs **36200** can be similar to ribs **32200** (FIG. **32**), such that ribs **36210**, **36220**, **36330**, and **36340** (FIG. **36**) can be respectively similar to ribs **32210**, **32220**, **32330**, and **32340** (FIG. **32**), but ribs **36200** are aligned with the heelward location of locus **32500**. In the present example, strikeface **22141** comprises strikeface heel end **36147** and strikeface heel-end point **36146** between strikeface centerpoint **32145** and strikeface heel end **36147**. Heel-end plane **36730**, which comprises strikeface heel-end point **36146**, is parallel to center plane **32730**. Ribs **36200** are aligned with conic segment perimeter **32510**, which is centered at heel-end plane **36730** to address a target stress direction traversing the heel portion of strikeface **22141**. In the same or other examples, strikeface heel-end point **36146** can be located midway between strikeface centerpoint **32145** and strikeface heel end **36147**.

FIG. **37** illustrates a top X-Ray view of golf club head **37000**, comprising ribs **37200**, **37300**, and **37400** aligned with respect to locus **33500** and conic section perimeter **33510**, which in the present example comprises the golf ball perimeter of golf ball **1570**. In the present example, conic section perimeter **33510** is aligned with respect to strikeface centerpoint **32145** as described above in FIG. **32** with respect to center plane **32730**, locus **32500**, and conic section perimeter **32510**. There can be other examples, however, where conic section perimeter **33510** can be aligned with toe-end point **35146** as described above for FIG. **35**, or aligned with heel-end point **36146** as described above for FIG. **36**.

The ribs of golf club head **37000** can be located at different portions of body **22100**. For example, in the present embodiment, ribs **37300** and **37400** are located at crown **22110**, while ribs **37200** are located at sole **22120**. Such locations can change in other embodiments. For instance, ribs **37200** can be located at crown **22110** in some implementations, while at least one of ribs **37300** or **37400** can be located at sole **22120** in the same or other implementations.

Ribs **37300** comprise rib **37310** with rib axis **37313**, rib **37320** with rib axis **37323**, and rib **37330** with rib axis **37333**, where rib axes **37313**, **37323**, and **37333** intersect each other at conic section perimeter **33510**. In the present example, ribs **37300** are located at the heelside of golf club head **37000**, and intersect each other at a toeward segment of conic section perimeter **33510**, and can be tangent to perimeter section **37513** of conic section **33510**. There can be other embodiments, however, where ribs **37300** can intersect conic section perimeter **33510** elsewhere, such as at a heelward, forward, or rearward section thereof.

Ribs **37400** comprise rib **37410** with rib axis **37413**, rib **37420** with rib axis **37423**, and rib **37430** with rib axis **37433**, where rib axes **37413**, **37423**, and **37433** also intersect each other at conic section perimeter **33510**. In the present example, ribs **37400** are located at the toeside of golf club head **37000**, and intersect each other at a heelward segment of conic section perimeter **33510**, and can be tangent to perimeter section **37154** of conic section **33510**. There can be other embodiments, however, where ribs **37400** can intersect conic section perimeter **33510** elsewhere, such as at a toeward, forward, or rearward section thereof.

Ribs **37200** comprise rib **37210** and **37220**. Rib **37210** comprises rib segments **37211** and **37212** coupled to each other, and rib axis **37213**. Rib axis **37213** comprises rib axis portion **372131** along rib segment **37211**, and rib axis portion **372132** along rib segment **37212**. In the present embodiment, rib axis portion **372131** intersects conic section perimeter **33510** at perimeter section **37511**, while rib axis portion **372132** intersects conic section perimeter **33510** at perimeter section **37512**. Rib axis portions **372131** and **372132** also can be respectively tangent to perimeter sections **37511** and **37512** of conic section perimeter **23510** in the present example.

Rib **37220** of ribs **37200** comprises rib segments **37221** and **37222** coupled to each other, and rib axis **37223**. Rib axis **37223** comprises rib axis portion **372231** along rib segment **37221**, and rib axis portion **372232** along rib segment **37212**. In the present embodiment, rib axis portion **372231** intersects

rib axis portion **372131** at or proximate to perimeter section **37511** of conic section perimeter **23510**, while rib axis portion **372232** intersects rib axis portion **372132** at perimeter section **37512** of conic section perimeter **23510**.

FIG. **39** presents a flowchart of method **39000** for providing a golf club head in accordance with the present disclosure. In some examples, the golf club head of method **39000** can be similar to one or more of the golf club heads presented herein, such as golf club head **22000** (FIGS. **22-30**), of the golf club heads of FIGS. **32-38**.

Method **39000** comprises block **39100** for providing a body comprising a heel end, a toe end, a crown, a sole, a front wall comprising a strikeface, and a rear side. In some examples, the body can be similar to body **22100** as described with respect to FIGS. **22-38**.

Method **39000** also comprises block **39200** for providing ribs protruded from a rib surface of the body. In some examples, the ribs can be similar to the ribs of the exemplary embodiments described herein, such as at least a portion of ribs **22200** (FIGS. **22-26**), ribs **32200** (FIG. **32**), ribs **33200** (FIG. **33**), ribs **34200** (FIG. **34**), ribs **35200** (FIG. **35**), ribs **34600** (FIG. **36**), ribs **37200** (FIG. **37**), and/or ribs **38200** (FIG. **38**). The ribs can protrude from one or more of the portions of the body of the golf club head, such as from the crown, the sole, and/or the skirt thereof, whether internally or externally.

Block **39200** of method **39000** can comprise sub-block **39210** for aligning the ribs such that the rib axes intersect each other and intersect a locus defined by a conic section perimeter. In some examples, the ribs can be aligned with respect to the loci and conic section perimeters as described above for FIGS. **22**, and/or **32-38**.

In some examples, one or more of the different blocks or sub-blocks of method **39000** can be combined into a single block or sub-block, or performed simultaneously, and/or the sequence of such blocks or sub-blocks can be changed. For example, blocks **39100** and **39200** can be performed simultaneously, such as where the one or more ribs are integral with the body by comprising a single piece with one or more portions of the body of the golf club head. In the same or other examples, some of the blocks of method **39000** can be subdivided into several sub-blocks. For example, block **39100** can be subdivided into a sub-block for providing the crown, sole, and/or skirt, and another sub-block for providing the front end of the body and/or a strikeface thereof. There can also be examples where method **39000** can comprise further or different blocks. As an example, a further block can comprise coupling a shaft to the hosel of the body. Other variations can be implemented for method **32000** without departing from the scope of the present disclosure.

Although the golf club heads with ribs and related methods herein have been described with reference to specific embodiments, various changes may be made without departing from the spirit or scope of the present disclosure. For example, although ribs **22200** are substantially straight as shown in FIGS. **22-28**, there can be embodiments with ribs similar to ribs **22200** that are not straight or otherwise follow a curved, zig-zag, or S-shaped path along their respective lengths along the rib surface of the body of their respective golf club heads. As another example, ribs **22200** or other ribs similar thereto can be external rather than internal. As yet another example, although FIGS. **22-28** depict the reduced dimension portions of ribs **22200**, such as rib portion **25213**, **24218**, **22233**, and **22223**, as continuously protruded above rib surface **24200**, there can be other embodiments where at least part of such reduced dimension portions can merge to rib surface **24200** such as to comprise a rib height or rib thickness of zero. In some embodiments, the ribs of the golf club head may be aligned to intersect or be tangential to other loci and perimeter shapes different than those illustrated in FIGS. **22** and **32-38**. For instance, such other loci and perimeter shapes can be semi-circular, semi-elliptical, hyperbolic, and/or parabolic.

Additional examples of such changes have been given in the foregoing description. Other permutations of the different embodiments having one or more of the features of the various figures are likewise contemplated. Accordingly, the disclosure herein is intended to be illustrative of the scope of the invention and is not intended to be limiting. It is intended that the scope of this application shall be limited only to the extent required by the appended claims.

The golf club heads with ribs and related methods discussed herein may be implemented in a variety of embodiments, and the foregoing discussion of certain of these embodiments does not necessarily represent a complete description of all possible embodiments. Rather, the detailed description of the drawings, and the drawings themselves, disclose at least one preferred embodiment, and may disclose alternative embodiments.

As the rules to golf may change from time to time (e.g., new regulations may be adopted or old rules may be eliminated or modified by golf standard organizations and/or governing bodies such as the United States Golf Association (USGA), the Royal and Ancient Golf Club of St. Andrews (R&A), etc.), golf equipment related to the apparatus, methods, and/or articles of manufacture described herein may be conforming or non-conforming to the rules of golf at any particular time. Accordingly, golf equipment related to the apparatus, methods, and/or articles of manufacture described herein may be advertised, offered for sale, and/or sold as conforming or non-conforming golf equipment. The apparatus, methods, and/or articles of manufacture described herein are not limited in this regard.

While at least some of the above examples have been depicted and/or described with respect to with fairway wood-type golf clubs or driver-type golf clubs, the apparatus, methods, and/or articles of manufacture described herein may be applicable to other types of golf clubs such as, a hybrid-type golf club, an iron-type golf club, a wedge-type golf club, and/or a putter-type golf club. Alternatively, the apparatus, methods, and/or articles of manufacture described herein may be applicable other type of sports equipment such as a hockey stick, a tennis racket, a fishing pole, a ski pole, etc.

All elements claimed in any particular claim are essential to the embodiment claimed in that particular claim. Consequently, replacement of one or more claimed elements constitutes reconstruction and not repair. Additionally, benefits, other advantages, and solutions to problems have been described with regard to specific embodiments. The benefits, advantages, solutions to problems, and any element or elements that may cause any benefit, advantage, or solution to occur or become more pronounced, however, are not to be construed as critical, required, or essential features or elements of any or all of the claims, unless such benefits, advantages, solutions, or elements are expressly stated in such claims.

Moreover, embodiments and limitations disclosed herein are not dedicated to the public under the doctrine of dedication if the embodiments and/or limitations: (1) are not expressly claimed in the claims; and (2) are or are potentially equivalents of express elements and/or limitations in the claims under the doctrine of equivalents.

The invention claimed is:

1. A golf club head comprising:

a body comprising:

a heel end, a toe end, a crown, a sole, a front end, and a rear end; and

at least one of a skirt or a hosel; and

a first rib protruding from a rib surface of the body;

wherein:

the first rib comprises:

first and second first-rib ends opposite each other; and

first, second, and third first-rib portions protruded from the rib surface of the body;

the first first-rib portion is located between the first first-rib end and the third first-rib portion;

the second first-rib portion is located between the second first-rib end and the third first-rib portion;

the first first-rib portion comprises a first first-rib dimension comprising one of:

a first first-rib height substantially orthogonal to the rib surface when the first first-rib dimension comprises the first first-rib height; or

a first first-rib thickness substantially orthogonal to the first first-rib height;

the second first-rib portion comprises a second first-rib dimension comprising one of:

a second first-rib height substantially orthogonal to the rib surface when the first first-rib dimension comprises the first first-rib height; or

a second first-rib thickness substantially orthogonal to the second first-rib height when the first first-rib dimension comprises the first first-rib thicknesses;

the third first-rib portion comprises a third first-rib dimension comprising one of:

a third first-rib height substantially orthogonal to the rib surface when the first first-rib dimension comprises the first first-rib height; or

a third first-rib thickness substantially orthogonal to the third first-rib height when the first first-rib dimension comprises the first first-rib thicknesses;

the rib surface comprises a first high amplitude zone at a first one of the crown, the sole, or the skirt;

the third first-rib dimension is located at the first high amplitude zone;

the first and second first-rib dimensions are located outside the first high amplitude zone; and

the first and second first-rib dimensions are greater than the third first-rib dimension.

2. The golf club head of claim 1, wherein:

the first first-rib dimension comprises the first first-rib height;

the second first-rib dimension comprises the second first-rib height; and

the third first-rib dimension comprises the third first-rib height.

3. The golf club head of claim 1, wherein:

the first first-rib dimension comprises the first first-rib thickness;

the second first-rib dimension comprises the second first-rib thickness; and

the third first-rib dimension comprises the third first-rib thickness.

4. The golf club head of claim 1, wherein:

a maximum first-rib height of the first rib, measured orthogonal to the rib surface, is up to approximately 6 mm.

5. The golf club head of claim 1, wherein:

the third first-rib dimension comprises the third first-rib height; and

the third first-rib height is approximately 0.5 mm to approximately 4 mm.

6. The golf club head of claim 1, wherein:

at least one of the first or second first-rib height is approximately 1.1 times to approximately 12 times greater than the third first-rib height.

7. The golf club head of claim 1, wherein:

at least one of the first or second first-rib thickness is approximately 1.1 times to approximately 8 times greater than the third first-rib thickness.

8. The golf club head of claim 1, wherein:

the first rib protrudes from the rib surface along at least one of the crown or the sole of the body.

9. The golf club head of claim 1, wherein:

the first rib protrudes from the rib surface and extends continuously from the crown to the sole of the body.

10. The golf club head of claim 1, wherein:

the skirt is located between the crown and the sole; and

the first rib protrudes from the rib surface along at least a portion of the skirt.

11. The golf club head of claim 1, wherein:

the first rib comprises:

a first rib center section comprising 95% of a first rib length of the first rib and centered about a first rib centerpoint of the first rib length;

the first rib center section comprises:

the first first-rib dimension of the first first-rib portion;

the second first-rib dimension of the second first-rib portion; and

the third first-rib dimension of the third first-rib portion; and

the third first-rib dimension protrudes from the rib surface between the first first-rib portion and the second first-rib portion.

12. The golf club head of claim 11, wherein:

the third first-rib dimension comprises the third first-rib height; and

the third first-rib height is a minimum first-rib height of the first rib center section.

13. The golf club head of claim 1, wherein:

the first high amplitude zone comprises a location at the first one of the crown, the sole, or the skirt where a maximum oscillation amplitude of the body exists upon a golf shot impact between a golf ball and a strikeface of the front end of the body.

14. The golf club head of claim 13, wherein:

the first high-amplitude zone, for the location of the third first-rib dimension, is defined with respect to where the maximum oscillation amplitude is approximately 0.5 mm to approximately 4 mm, at a frequency of approximately 1000 Hz to approximately 5000 Hz, from the golf shot impact at an impact speed of approximately 25 m/s to approximately 75 m/s.

15. The golf club head of claim 1, wherein:

the first rib comprises a fourth first-rib portion located between the second first-rib end and the second first-rib portion;

the fourth first-rib portion comprises a fourth first-rib dimension comprising one of:

a fourth first-rib height substantially orthogonal to the rib surface when the first first-rib dimension comprises the first first-rib height; or

a fourth first-rib thickness substantially orthogonal to the fourth first-rib height when the first first-rib dimension comprises the first first-rib thickness; and

the second first-rib dimension is greater than the fourth first-rib dimension.

16. The golf club head of claim **15**, wherein:

the rib surface comprises:

a first high amplitude zone of the first one of the crown, the sole, or the skirt; and

a second high amplitude zone of a second one of the crown, the sole, or the skirt;

the third first-rib dimension is located at the first high amplitude zone;

the first and second first-rib dimensions are located outside the first high amplitude zone;

the fourth first-rib dimension is located at the second high amplitude zone; and

the second first-rib dimension is located outside the second high amplitude zone.

17. The golf club head of claim **15**, wherein:

the first rib comprises a fifth first-rib portion located between the second first-rib end and the fourth first-rib portion;

the fifth first-rib portion comprises a fifth first-rib dimension comprising one of:

a fifth first-rib height substantially orthogonal to the rib surface when the first first-rib dimension comprises the first first-rib height; or

a fifth first-rib thickness substantially orthogonal to the fourth first-rib height when the first first-rib dimension comprises the first first-rib thickness; and

the fifth first-rib dimension is greater than the fourth first-rib dimension.

18. The golf club head of claim **1**, further comprising:

a second rib protruding from the rib surface; and

a third rib protruding from the rib surface;

wherein:

the first rib comprises a first rib axis;

the second rib comprises a second rib axis;

the third rib comprises a third rib axis; and

the first, second, and third rib axes intersect each other and a locus defined by a conic section perimeter forward of the front end of the body.

19. The golf club head of claim **18**, further comprising:

the first, second, and third rib axes are tangent to the conic section perimeter.

20. A method comprising:

providing a body of a golf club head, the body comprising:

a heel end, a toe end, a crown, a sole, a front end, and a rear end; and

at least one of a skirt or a hosel; and

providing a first rib protruding from a rib surface of the body;

wherein:

the first rib comprises:

first and second first-rib ends opposite each other; and

first, second, and third first-rib portions protruded from the rib surface of the body;

the first first-rib portion is located between the first first-rib end and the third first-rib portion;

the second first-rib portion is located between the second first-rib end and the third first-rib portion;

the first first-rib portion comprises a first first-rib dimension comprising one of:

a first first-rib height substantially orthogonal to the rib surface; or

a first first-rib thickness substantially orthogonal to the first first-rib height;

the second first-rib portion comprises a second first-rib dimension comprising:

a second first-rib height substantially orthogonal to the rib surface when the first first-rib dimension comprises the first first-rib height; or

a second first-rib thickness substantially orthogonal to the second first-rib height when the first first-rib dimension comprises the first first-rib thickness;

the third first-rib portion comprises a third first-rib dimension comprising:

a third first-rib height substantially orthogonal to the rib surface when the first first-rib dimension comprises the first first-rib height; or

a third first-rib thickness substantially orthogonal to the third first-rib height when the first first-rib dimension comprises the first first-rib thickness;

the rib surface comprises a first high amplitude zone at a first one of the crown, the sole, or the skirt.

the third first-rib dimension is located at the first high amplitude zone;

the first and second first-rib dimensions are located outside the first high amplitude zone; and

the first and second first-rib dimensions are greater than the third first-rib dimension.

21. The method of claim **20**, wherein:

providing the first rib comprises:

determining, from an FEA map of the body, a location of a maximum amplitude zone at a first one of the crown, the sole, or the skirt;

locating the third first-rib dimension at the maximum amplitude zone; and

locating the first and second first-rib dimensions located outside the maximum amplitude zone.

* * * * *