US009294168B2

(12) **United States Patent**
Kim et al.

(10) **Patent No.: US 9,294,168 B2**
(45) **Date of Patent: Mar. 22, 2016**

(54) **METHOD AND APPARATUS FOR TRANSMITTING AND RECEIVING CHANNEL STATE INFORMATION IN WIRELESS COMMUNICATION SYSTEM**

(71) Applicant: **Samsung Electronics Co., Ltd.**, Gyeonggi-do (KR)

(72) Inventors: **Younsun Kim**, Gyeonggi-do (KR); **Hyojin Lee**, Gyeonggi-do (KR); **Hyoungju Ji**, Seoul (KR); **Juho Lee**, Gyeonggi-do (KR); **Joonyoung Cho**, Gyeonggi-do (KR)

(73) Assignee: **Samsung Electronics Co., Ltd** (KR)

(*) Notice: Subject to any disclaimer, the term of this patent is extended or adjusted under 35 U.S.C. 154(b) by 0 days.

(21) Appl. No.: **14/030,545**

(22) Filed: **Sep. 18, 2013**

(65) **Prior Publication Data**

US 2014/0079146 A1 Mar. 20, 2014

(30) **Foreign Application Priority Data**

Sep. 18, 2012 (KR) 10-2012-0103431
Oct. 12, 2012 (KR) 10-2012-0113608

(51) **Int. Cl.**

H04B 7/02 (2006.01)
H04B 7/04 (2006.01)
H04L 5/00 (2006.01)
H04B 7/06 (2006.01)

(52) **U.S. Cl.**

CPC ***H04B 7/0417*** (2013.01); ***H04B 7/065*** (2013.01); ***H04L 5/0048*** (2013.01); *H04B 7/063* (2013.01); *H04B 7/0632* (2013.01); *H04B 7/0639* (2013.01); *H04L 5/0053* (2013.01); *H04L 5/0057* (2013.01)

(58) **Field of Classification Search**

CPC .. H04B 7/0626; H04B 7/0639; H04B 7/0456; H04B 7/024; H04B 7/063; H04B 7/0632; H04B 7/0417; H04B 7/0486; H04B 7/0413; H04B 7/0619; H04B 7/0634; H04B 7/0689; H04L 1/0026; H04L 5/0057; H04W 24/10

USPC 375/267; 370/329, 252

See application file for complete search history.

(56) **References Cited**

U.S. PATENT DOCUMENTS

2011/0141987 A1* 6/2011 Nam et al. 370/329
2012/0213095 A1* 8/2012 Krishnamurthy et al. 370/252

(Continued)

FOREIGN PATENT DOCUMENTS

WO WO 2011/155763 12/2011
WO WO 2012/112281 8/2012

OTHER PUBLICATIONS

Alcatel-Lucent et al., "Considerations on CSI Feedback Enhancements for High-Prioirty Antenna Configurations", R1-112420, 3GPP TSG-RAN WG1 #66, Aug. 22-26, 2011.

(Continued)

Primary Examiner — Don N Vo
(74) *Attorney, Agent, or Firm* — The Farrell Law Firm, P.C.

(57) **ABSTRACT**

A method and an apparatus are provided for transmitting channel state information of a terminal is provided. A first Channel State Information Reference Signal (CSI-RS) and a second CSI-RS are received. Channel State Information (CSI) is generated based on both the first CSI-RS and the second CSI-RS. The CSI is transmitted.

20 Claims, 14 Drawing Sheets

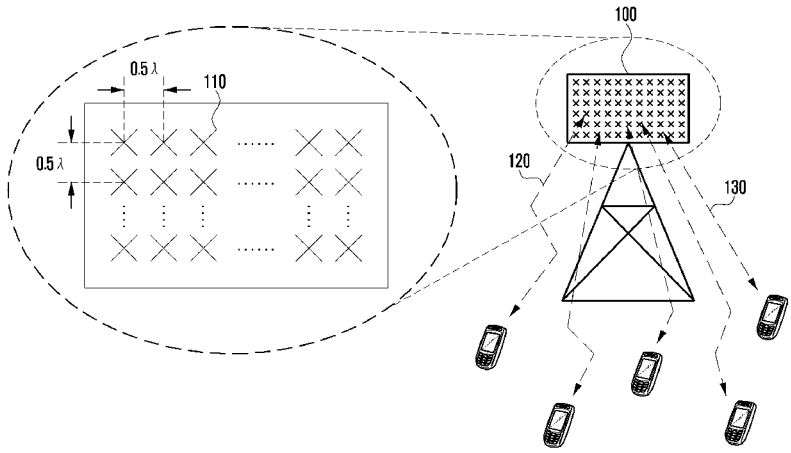

(56) **References Cited**

U.S. PATENT DOCUMENTS

2013/0058307	A1	3/2013	Kim et al.	
2013/0322361	A1*	12/2013	Ko et al.	370/329
2014/0126433	A1*	5/2014	Yang et al.	370/280
2014/0133336	A1*	5/2014	Park et al.	370/252
2014/0192762	A1*	7/2014	Li et al.	370/329
2014/0241454	A1*	8/2014	Kim et al.	375/267
2014/0247748	A1*	9/2014	Kang et al.	370/252

OTHER PUBLICATIONS

Samsung, "CoMP RRC Parameters", R1-122243, 3GPP TSG RAN WG1 #69, May 21-25, 2012.

NTT Docomo et al., "CSI RS Configuration to Support 4 Tx MIMO UE in 8 Tx Networks", R1-110861, 3GPP TSG RAN WG1 Meeting #64, Feb. 21-25, 2011.

* cited by examiner

FIG. 1

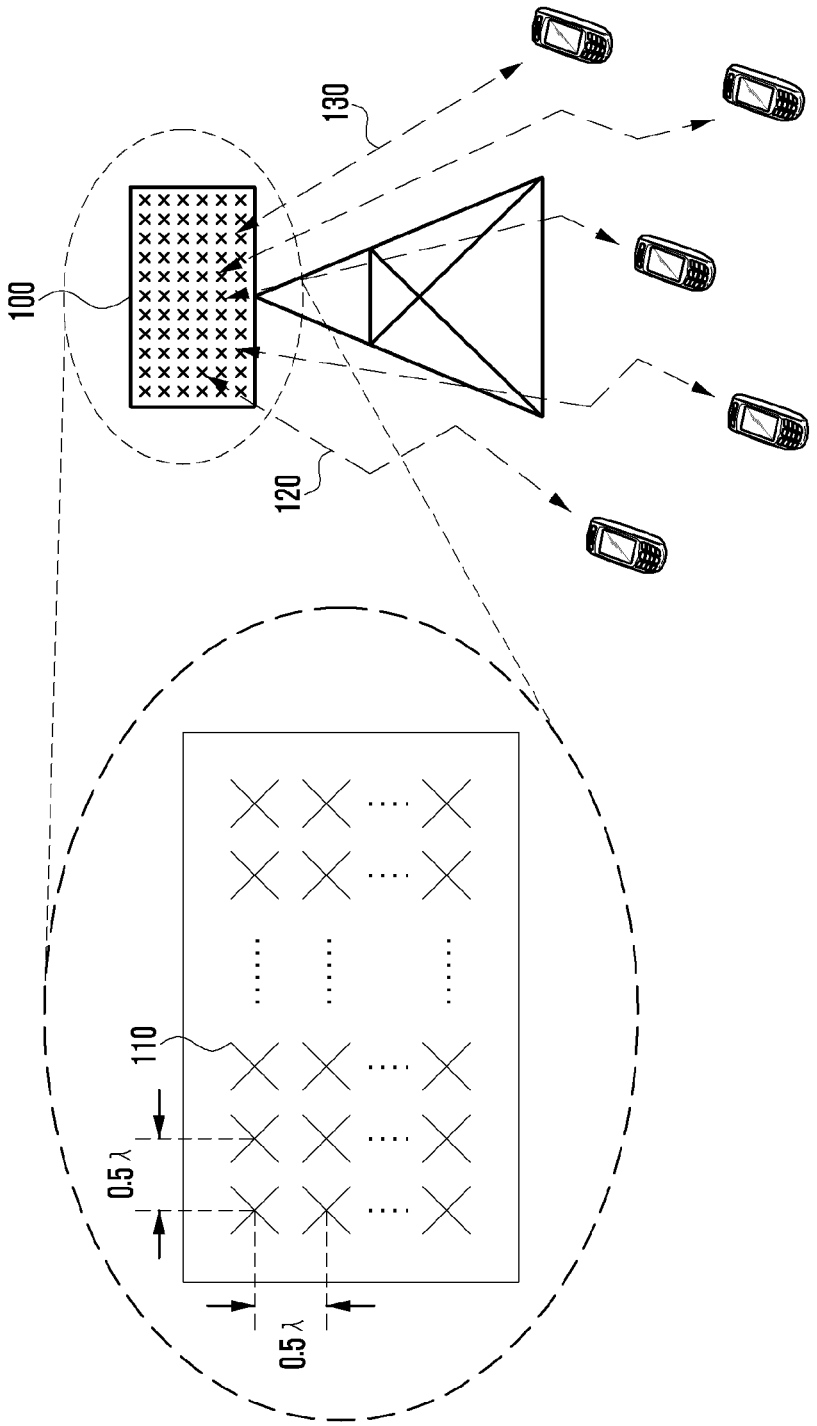

FIG. 2

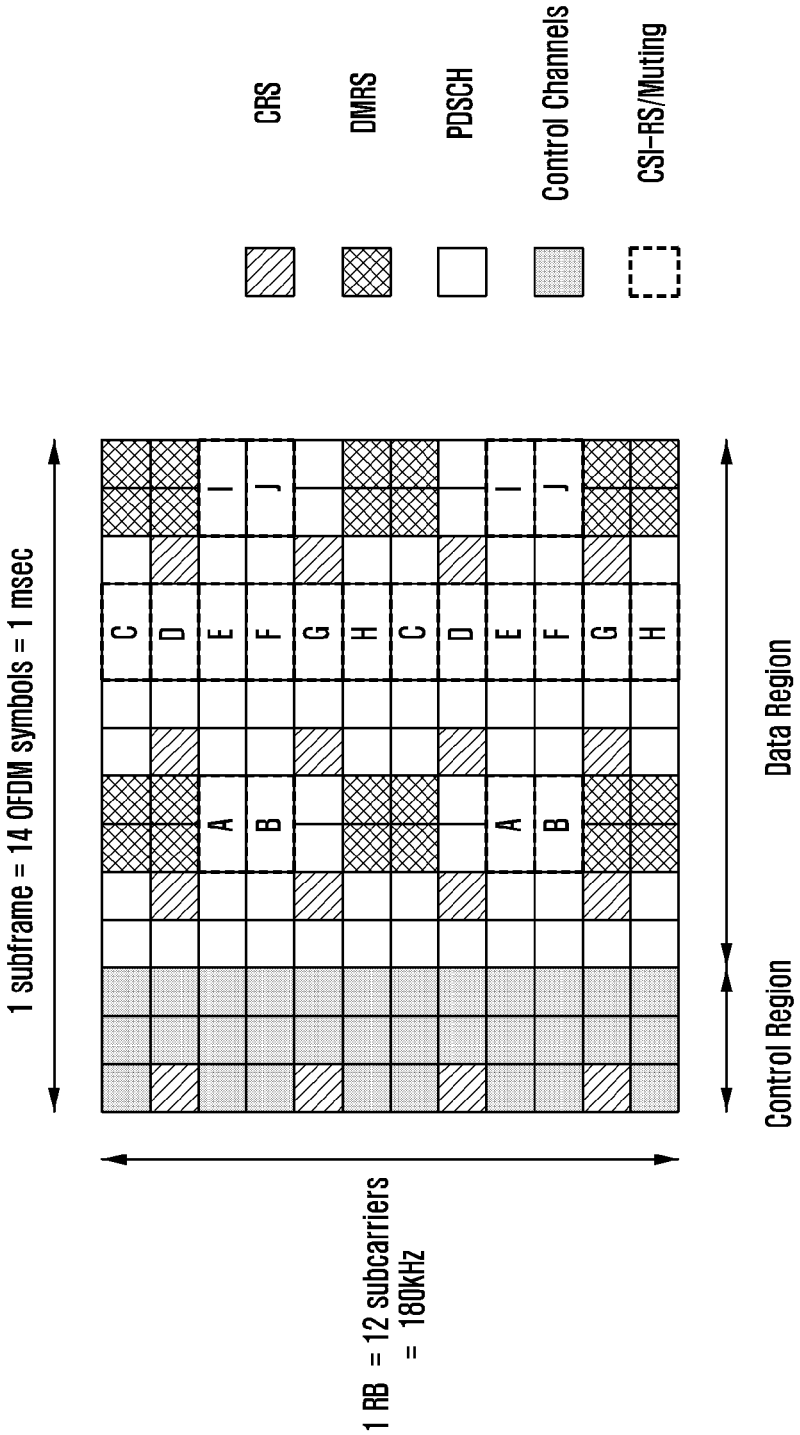
CRS
DMRS
PDSCH
Control Channels
CSI-RS/Muting
1 subframe = 14 OFDM symbols = 1 msec
A
B
C
D
E
F
G
H
I
J
Control Region
Data Region
1 RB = 12 subcarriers
= 180kHz

FIG. 3

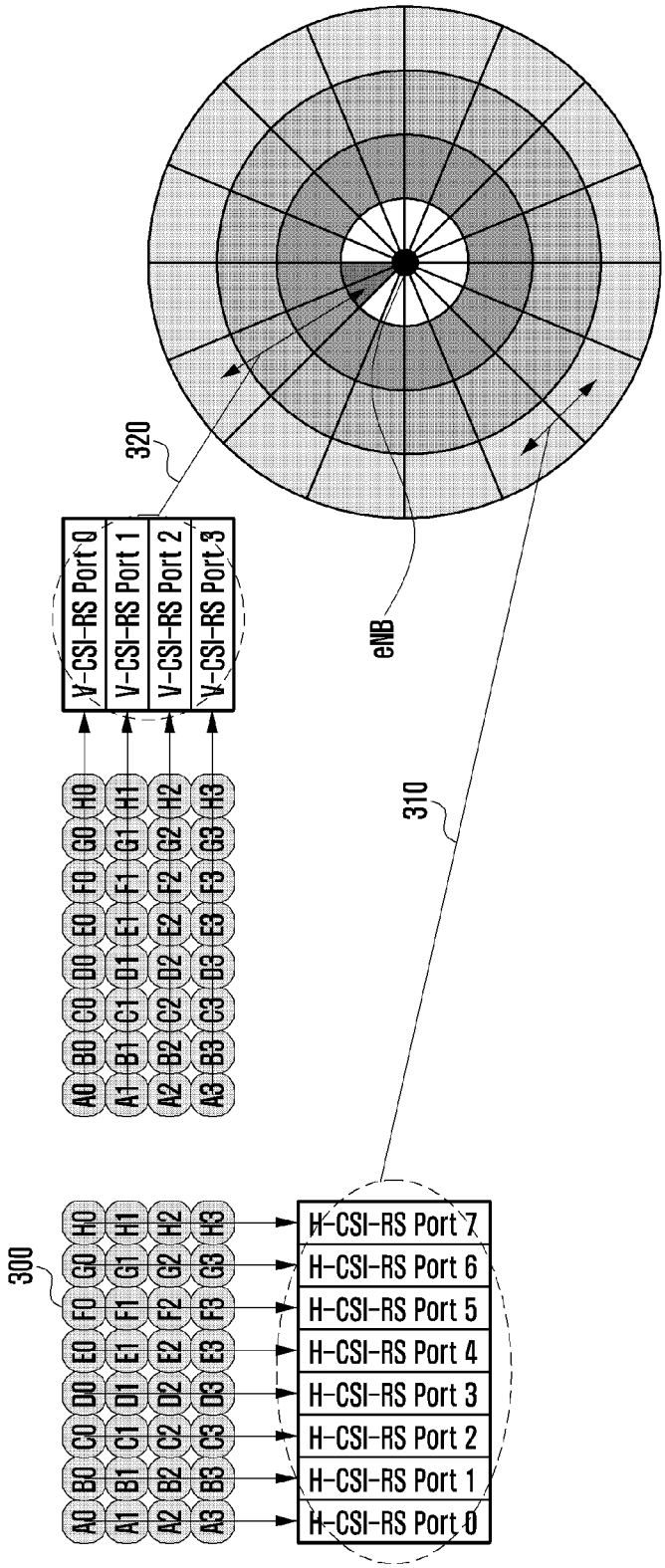
300
A0 B0 C0 D0 E0 F0 G0 H0
A1 B1 C1 D1 E1 F1 G1 H1
A2 B2 C2 D2 E2 F2 G2 H2
A3 B3 C3 D3 E3 F3 G3 H3
H-CSI-RS Port 0
H-CSI-RS Port 1
H-CSI-RS Port 2
H-CSI-RS Port 3
H-CSI-RS Port 4
H-CSI-RS Port 5
H-CSI-RS Port 6
H-CSI-RS Port 7
310
V-CSI-RS Port 0
V-CSI-RS Port 1
V-CSI-RS Port 2
V-CSI-RS Port 3
320
eNB

FIG. 4

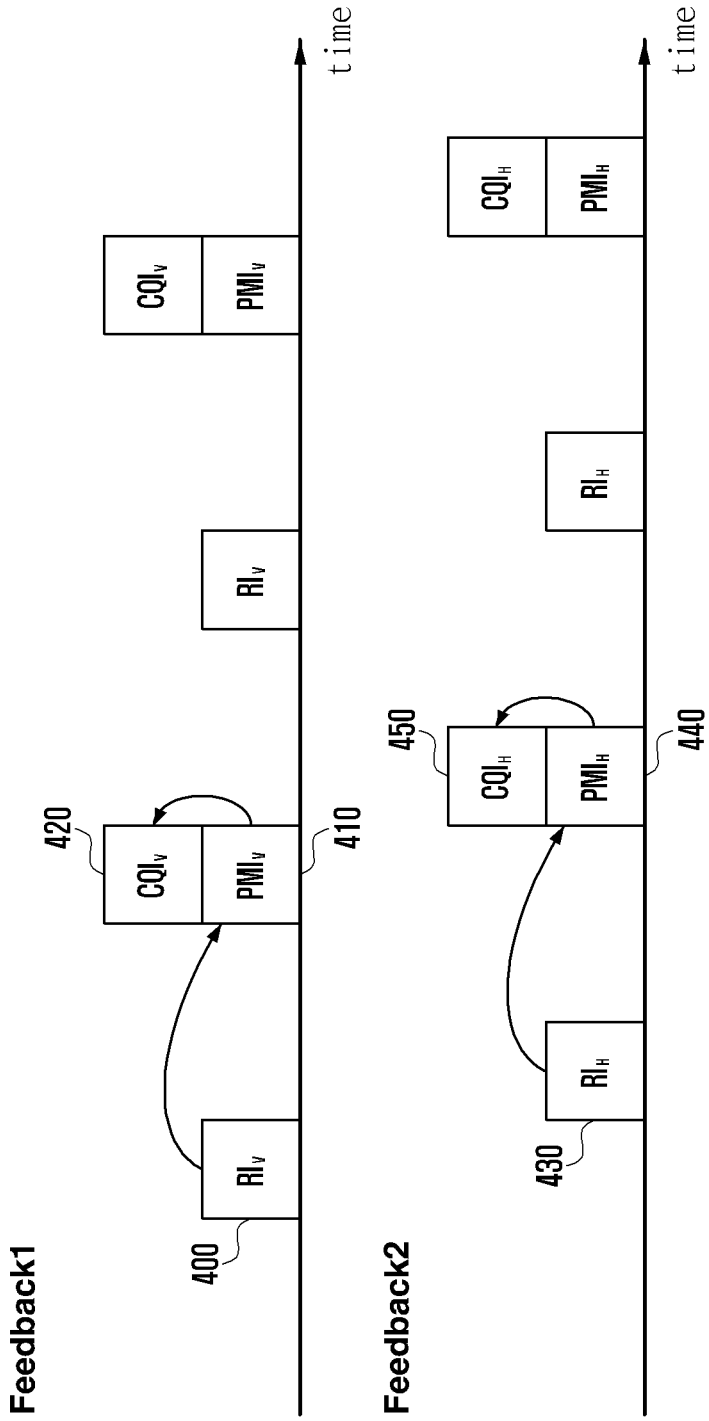
Feedback1
time
400
RI_V
420
CQI_V
PMI_V
410
RI_V
CQI_V
PMI_V
Feedback2
time
430
RI_H
450
CQI_H
PMI_H
440
RI_H
CQI_H
PMI_H

FIG. 5

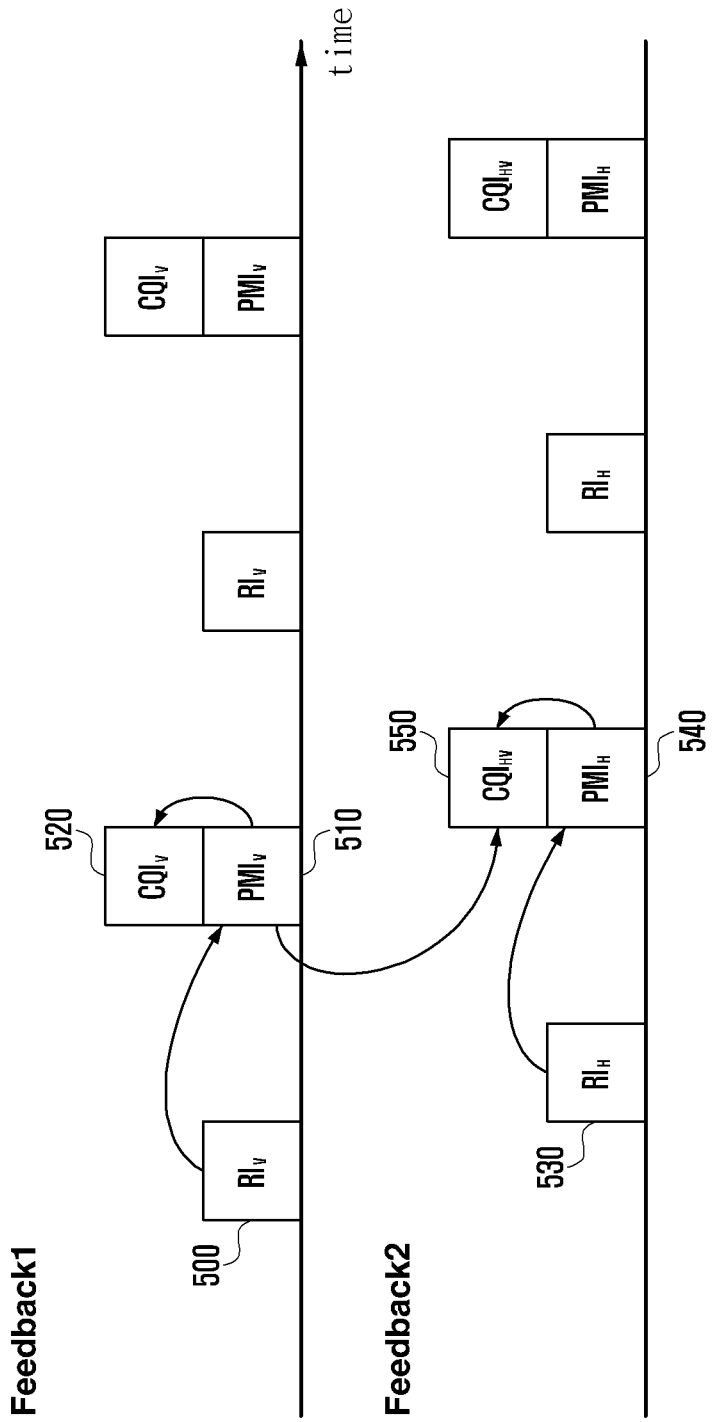
Feedback1
Feedback2
time
500
510
520
530
540
550
RI_V
CQI_V
PMI_V
RI_H
CQI_{HV}
PMI_H

FIG. 6

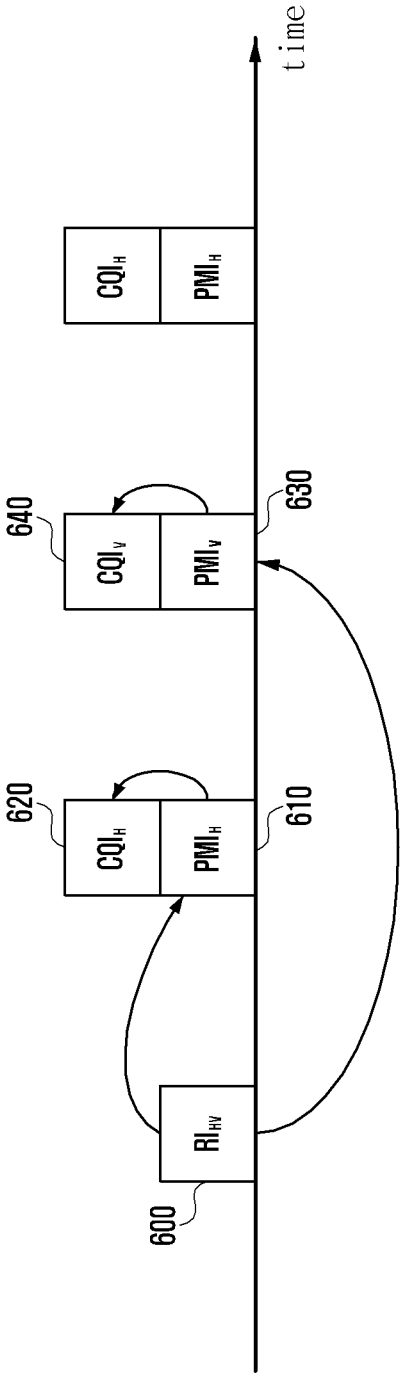

FIG. 7

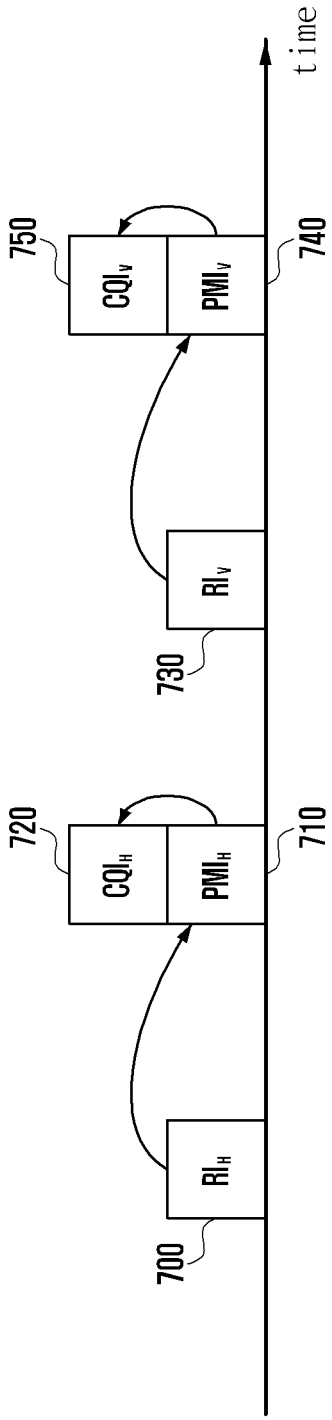

FIG. 8

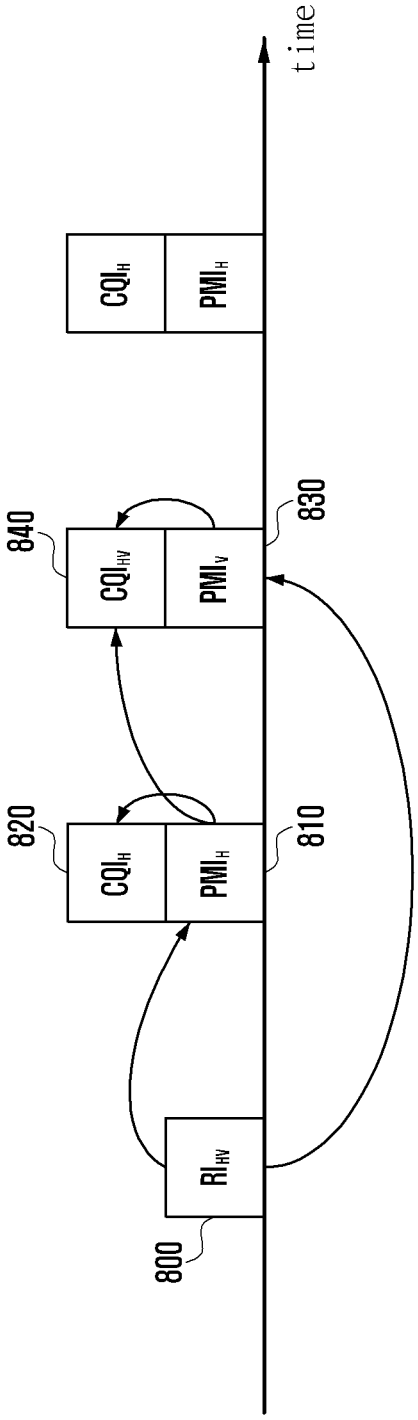

FIG. 9

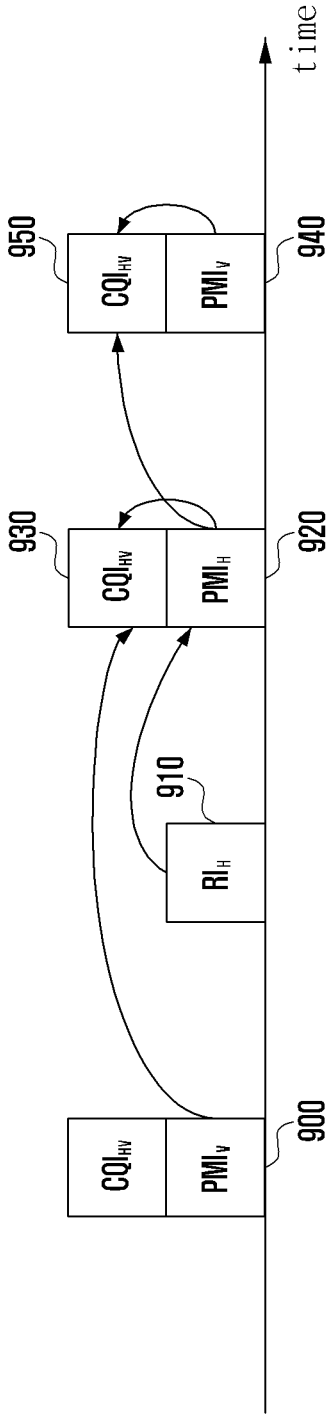
time
950
CQI_HV
PMI_V
940
930
CQI_HV
PMI_H
920
910
RI_H
CQI_HV
PMI_V
900

FIG. 10

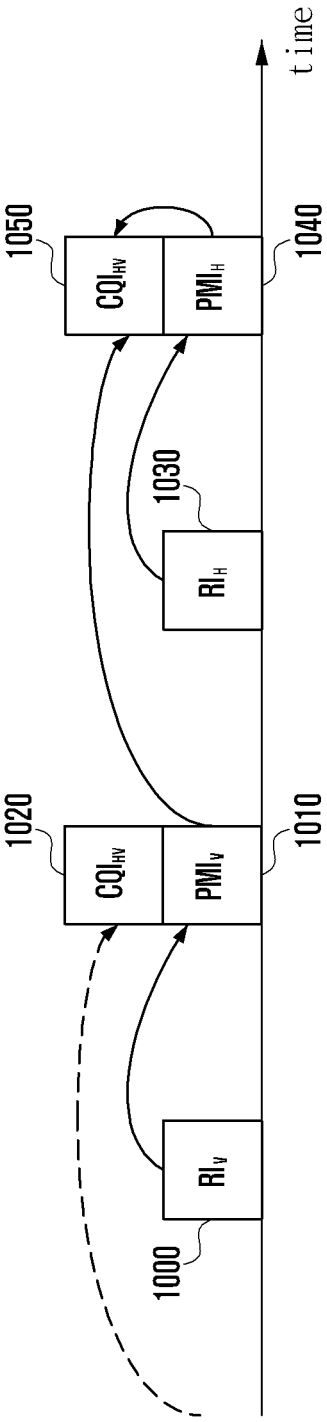
time
1000
RI_V
1010
PMI_V
1020
CQI_{HV}
1030
RI_H
1040
PMI_H
1050
CQI_{HV}

FIG. 11

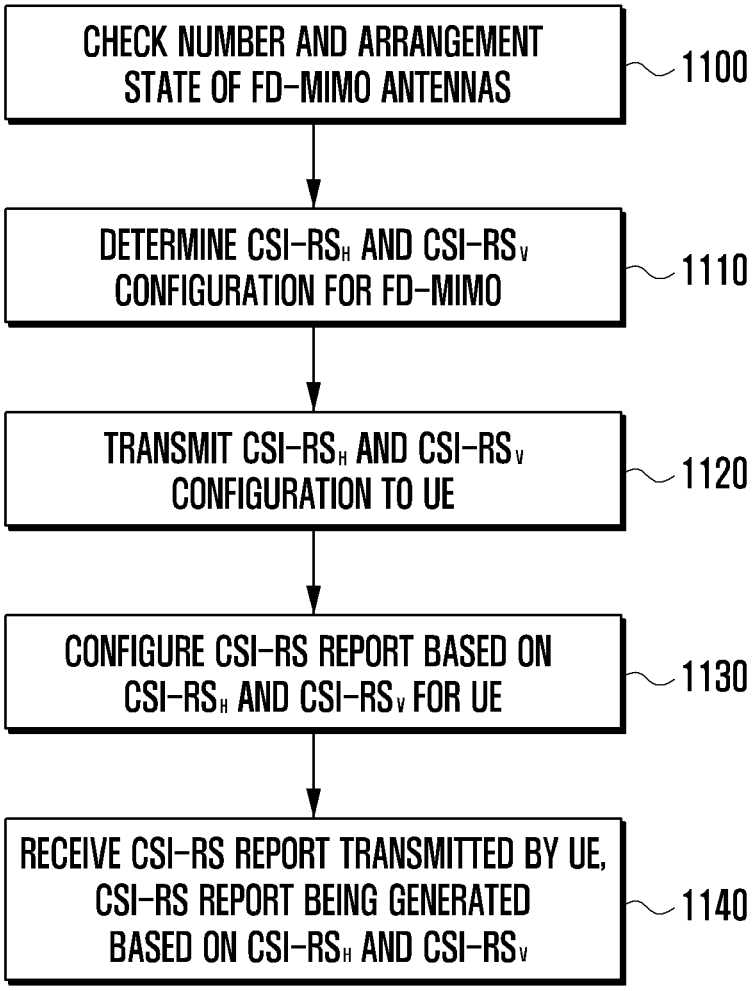
CHECK NUMBER AND ARRANGEMENT STATE OF FD-MIMO ANTENNAS
1100
DETERMINE CSI-RS$_H$ AND CSI-RS$_V$ CONFIGURATION FOR FD-MIMO
1110
TRANSMIT CSI-RS$_H$ AND CSI-RS$_V$ CONFIGURATION TO UE
1120
CONFIGURE CSI-RS REPORT BASED ON CSI-RS$_H$ AND CSI-RS$_V$ FOR UE
1130
RECEIVE CSI-RS REPORT TRANSMITTED BY UE, CSI-RS REPORT BEING GENERATED BASED ON CSI-RS$_H$ AND CSI-RS$_V$
1140

FIG. 12

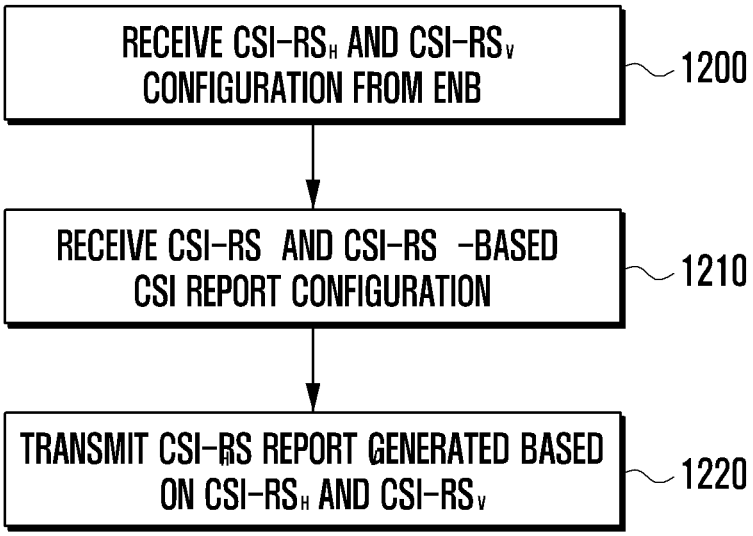
RECEIVE CSI-RS$_H$ AND CSI-RS$_V$ CONFIGURATION FROM ENB
1200
RECEIVE CSI-RS AND CSI-RS -BASED CSI REPORT CONFIGURATION
1210
TRANSMIT CSI-RS REPORT GENERATED BASED ON CSI-RS$_H$ AND CSI-RS$_V$
1220

FIG. 13

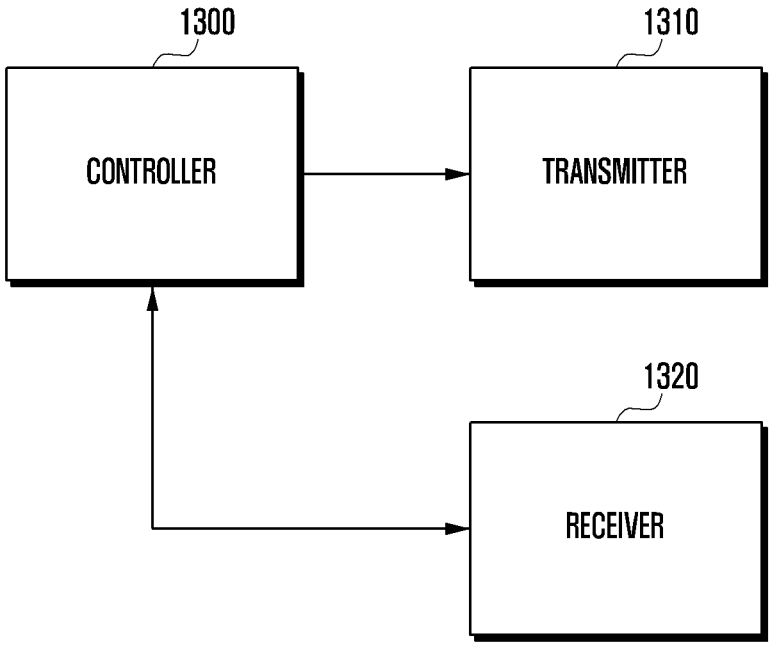

FIG. 14

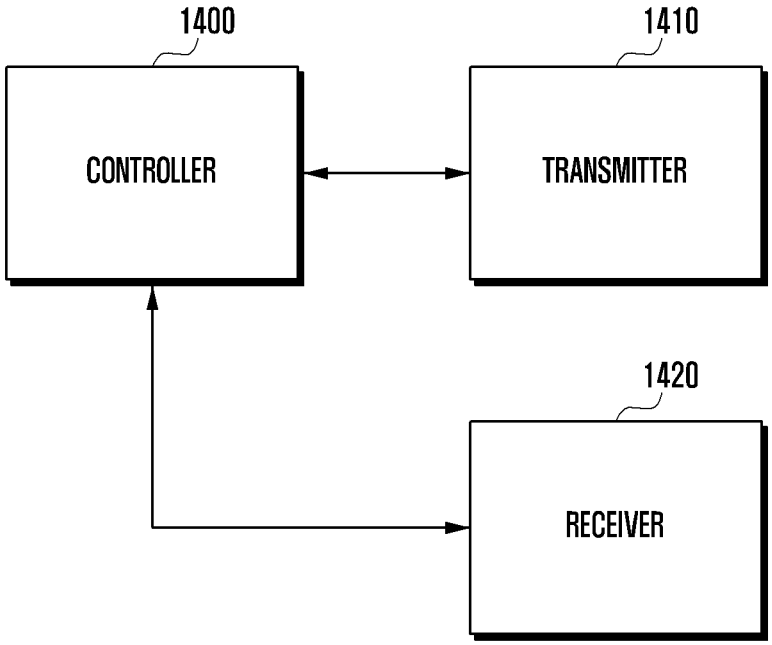

METHOD AND APPARATUS FOR TRANSMITTING AND RECEIVING CHANNEL STATE INFORMATION IN WIRELESS COMMUNICATION SYSTEM

PRIORITY

This application claims priority under 35 U.S.C. 119(a) to applications filed in the Korean Intellectual Property Office on Sep. 18, 2012 and Oct. 12, 2012, and assigned Serial Nos. 10-2012-0103431 and 10-2012-0113608, respectively, the contents of which are incorporated herein by reference.

BACKGROUND OF THE INVENTION

1. Field of the Invention

The present invention relates generally to a channel state information transmission/reception method and apparatus and, more particularly, to a method and apparatus for transmitting and receiving channel state information in a wireless communication system supporting a plurality of antennas.

2. Description of the Related Art

A Reference Signal (RS) is used to measure the channel state (or quality) between a base station and users (such as, for example, signal strength and distortion, interference strength, and Gaussian noise), and is used in demodulation and decoding of a received data symbol in a wireless mobile communication system. The reference signal is also to measure a radio channel state. The receiver measures the strength of the reference signal transmitted by the transmitter at a predetermined transmit power to determine the radio channel state between the receiver and the transmitter. The receiver sends a request to the transmitter for a data rate based on the determined radio channel state.

The 3rd generation evolved mobile communication standards such as, for example, the 3rd Generation Partnership Project Long Term Evolution-Advanced (3GPP LTE-A) and Institute of Electrical and Electronics Engineers (IEEE) 802.16m, adopt a multi-carrier multiple access technique such as Orthogonal Frequency Division Multiplexing (Multiple Access) (OFDM(A)). In the case of a multi-carrier multiple access-based wireless mobile communication system, the channel estimation and measurement performance is influenced by the number of symbols and the number of subcarriers to which the reference signal is mapped on the time-frequency resource grid. The channel estimation and measurement performance is also influenced by the power allocated for reference signal transmission. Accordingly, by allocating more radio resources (including time, frequency, and power), it is possible to improve channel estimation and measurement performance, resulting in improved received data symbol demodulation and decoding performance and channel state measurement accuracy.

In a resource-constrained mobile communication system, however, if the radio resource is allocated for transmitting resource signals, the resource amount for data signal transmission is reduced. For this reason, the resource amount for the reference signal transmission is determined by taking the system throughput into account. Particularly, in a Multiple Input Multiple Output (MIMO) system including a plurality of antennas, a key issue is how to design and measure reference signals.

SUMMARY OF THE INVENTION

The present invention has been made to address at least the above problems and/or disadvantages and to provide at least

the advantages described below. Accordingly, an aspect of the present invention provides a method and apparatus for efficiently transmitting/receiving channel state information.

Another aspect of the present invention provides a method and apparatus for efficiently transmitting/receiving the channel state information when using a plurality of antennas.

In accordance with an aspect of the present invention, a method for transmitting channel state information of a terminal is provided. A first Channel State Information Reference Signal (CSI-RS) and a second CSI-RS are received. Channel State Information (CSI) is generated based on both the first CSI-RS and the second CSI-RS. The CSI is transmitted.

In accordance with another aspect of the present disclosure, a terminal for transmitting channel state information is provided. The terminal includes a receiver that receives a first CSI-RS and a second CSI-RS. The terminal also includes a controller that generates CSI based on both the first CSI-RS and the second CSI-RS. The terminal further includes a transmitter that transmits the CSI.

BRIEF DESCRIPTION OF THE DRAWINGS

The above and other aspects, features, and advantages of the present invention will be more apparent from the following detailed description when taken in conjunction with the accompanying drawings, in which:

FIG. **1** is a diagram illustrating a Full Dimension MIMO (FD-MIMO) system;

FIG. **2** is a time-frequency grid illustrating a single Resource Block (RB) of a downlink subframe as a smallest scheduling unit in the LTE/LTE-A system;

FIG. **3** is a diagram illustrating a mechanism for CSI-RS transmission in FD-MIMO system, according to an embodiment of the present invention;

FIG. **4** is a diagram illustrating a mechanism for transmitting Rank Indicator (RI), Precoding Matrix Indicator (PMI), and Channel Quality Indicator (CQI) based on two CSI-RS in the feedback method, according to an embodiment of the present invention;

FIG. **5** is a diagram illustrating a mechanism for transmitting channel state information, according to an embodiment of the present invention;

FIG. **6** is a diagram illustrating a mechanism for transmitting channel state information, according to an embodiment of the present invention;

FIG. **7** is a diagram illustrating a mechanism for transmitting channel state information, according to another embodiment of the present invention;

FIG. **8** is a diagram illustrating a mechanism for transmitting channel state information, according to another embodiment of the present invention;

FIG. **9** is a diagram illustrating a mechanism for transmitting channel state information, according to another embodiment of the present invention;

FIG. **10** is a diagram illustrating a mechanism for transmitting channel state information, according to another embodiment of the present invention;

FIG. **11** is a flowchart illustrating an eNB procedure of configuring channel state information feedback of the User Equipment (UE) in a FD-MIMO system, according to an embodiment of the present invention;

FIG. **12** is a flowchart illustrating a UE procedure for transmitting the channel state information based on the configuration indicated by the evolved Node B (eNB) in the FD-MIMO system, according to an embodiment of the present invention;

FIG. **13** is a block diagram illustrating a configuration of the eNB, according to an embodiment of the present invention; and

FIG. **14** is a block diagram illustrating a configuration the UE, according to an embodiment of the present invention.

DETAILED DESCRIPTION OF EMBODIMENTS OF THE PRESENT INVENTION

Embodiments of the present invention are described in detail with reference to the accompanying drawings. The same or similar components may be designated by the same or similar reference numerals although they are illustrated in different drawings. Detailed descriptions of constructions or processes known in the art may be omitted to avoid obscuring the subject matter of the present disclosure.

The following terms are defined in consideration of the functionality in embodiments of the present invention, and may vary according to the intention of a user or an operator, usage, etc. Therefore, the definition should be made on the basis of the overall content of the present specification.

Although the description is directed to an OFDM-based radio communication system, particularly, the 3GPP Evolved Universal Terrestrial Radio Access (E-UTRA), it will be understood by those skilled in the art that embodiments of the present invention can be applied to other communication systems having a similar technical background and channel format, with a slight modification, without departing from the spirit and scope of the present invention.

Embodiments of the present invention relate to a wireless mobile communication system and, in particular, to a method for efficiently transmitting/receiving channel state information in a wireless mobile communication system operating with a multicarrier multiple access scheme such as, for example, Orthogonal Frequency Division Multiple Access (OFDMA).

Mobile communication systems have evolved into high-speed, high-quality wireless packet data communication systems that provide data and multimedia services beyond the early voice-oriented services. Recently, various mobile communication standards, such as, for example, High Speed Downlink Packet Access (HSDPA), High Speed Uplink Packet Access (HSUPA), LTE, and LTE-A defined in 3rd Generation Partnership Project (3GPP), High Rate Packet Data (HRPD) defined in 3rd Generation Partnership Project-2 (3GPP2), and 802.16 defined in IEEE, have been developed to support the high-speed, high-quality wireless packet data communication services.

Existing 3rd generation mobile communications, including LTE, Ultra Mobile Broadband (UMB), and 802.16m, operate based on a multi-carrier multiple access scheme and adopt Multiple Input Multiple Output (MIMO) with channel sensitive scheduling, such as beamforming and Adaptive Modulation and Coding (AMC), to improve transmission efficiency. These techniques increase the system throughput by improving transmission efficiency in such a way as to concentrate transmit power of a plurality of antennas, adjusting an amount of transmit data, and selectively transmitting data to the user with a best channel quality. Since most of these techniques operate based on the channel state information between the base station (eNB) and the terminal (UE or Mobile Station (MS)), the eNB or UE has to measure the channel state between the eNB and the UE. At this time, the signal used for channel state measurement is a Channel State Indication Reference Signal (CSI-RS). The eNB is a transmitter in downlink and a receiver in uplink. The one eNB may manage a plurality of cells for transmission/reception. A mobile communication system includes a plurality of eNBs distributed geographically, and each eNB performs transmission/reception through a plurality of cells.

Existing 3rd and 4th Generation mobile communication systems represented by LTE/LTE-A adopt a MIMO scheme with a plurality of transmit and receive antennas to transmit a plurality of information streams as spatially separated. This technique of transmitting the plurality of information streams as spatially separated is referred to as spatial multiplexing. Typically, the number of information streams capable of being spatially multiplexed depends on the number of antennas of the transmitter and the receiver. The number of information streams that can be spatially multiplexed is referred to rank in general. In the case of the MIMO scheme till the standard of LTE/LTE-A Release 11, the spatial multiplexing of up to 8×8 antennas and up to rank 8 are supported.

The FD-MIMO system, to which a technique proposed in an embodiment of the present invention is applied, has been evolved from the LTE/LTE-A MIMO system supporting up to 8 transmit antennas so as to support 32 or more transmit antennas. However, the scope of the present invention is not limited thereto.

FIG. **1** is a diagram illustrating an FD-MIMO system. The FD-MIMO system is a wireless communication system that is capable of transmitting data using a few dozen or more transmit antennas.

Referring to FIG. **1**, a base station transmitter **100** transmits radio signals **120** and **130** through a few dozen or more transmit antennas. Transmit antennas **110** are arranged at a minimum distance among each other. The minimum distance may be half of the wavelength ($\lambda/2$) of the radio signal. Typically, when the transmit antennas are arranged at the distance of half of the wavelength of the radio signal, the signals transmitted by the respective transmit antennas are influenced by the radio channel with low correlation. Assuming a radio signal band of 2 GHz, this distance is 7.5 cm, and is shortened as the band becomes higher than 2 GHz.

In FIG. **1**, a few dozen or more transmit antennas **110** arranged at the base station are used to transmit signals to one or more terminals as denoted by reference numerals **120** and **130**. In order to transmit signals to a plurality of terminals simultaneously, an appropriated precoding is applied. One terminal may receive a plurality of information streams. Typically, a number of information streams that a terminal can receive is determined depending on the number of receive antennas of the terminal, channel state, and reception capability of the terminal.

In order to efficiently implement the FD-MIMO system, the terminal has to accurately measure the channel condition and interference size and efficiently transmit the channel state information to the base station. If the channel state information is received, the base station determines the terminals for downlink transmission, downlink data rate, and precoding to be applied. In the case of an FD-MIMO system using a large number of transmit antennas, if the channel state information transmission method of the legacy LTE/LTE-A system is applied without modification, the amount of control information to be transmitted in uplink significantly increases, resulting in uplink overhead.

The mobile communication system is restricted in resources such as, for example, time, frequency, and transmission power. Accordingly, if a resource allocated for a reference signal increases, the resource amount to be allocated for data traffic channel transmission decreases, resulting in a reduction in the amount of data transmission. Although the channel estimation and measurement performance are improved, the data transmission amount decreases,

resulting in reduction of entire system throughput. Thus, there is a need for efficiently allocating resources for reference signal and traffic channel transmissions in order to maximize the entire system throughput.

FIG. **2** is a time-frequency grid illustrating a single RB of a downlink subframe as a smallest scheduling unit in the LTE/LTE-A system.

As shown in FIG. **2**, the radio resource is of one subframe in the time domain and one RB in the frequency domain. The radio resource consists of 12 subcarriers in the frequency domain and 14 OFDM symbols in the time domain, i.e., 168 unique frequency-time positions. In LTE/LTE-A, each frequency-time position is referred to as a Resource Element (RE).

The radio resource structured as shown in FIG. **2** can be used for transmitting different types of signals as follows.

1. Cell-specific Reference Signal (CRS): reference signal transmitted to all the UEs within a cell

2. Demodulation Reference Signal (DMRS): reference signal transmitted to a specific UE

3. Physical Downlink Shared Channel (PDSCH): data channel transmitted in downlink, which the eNB uses to transmit data to the UE, and mapped to REs not used for reference signal transmission in a data region of FIG. **2**

4. Channel State Information Reference Signal (CSI-RS): reference signal transmitted to the UEs within a cell and used for channel state measurement. Multiple CSI-RSs can be transmitted within a cell

5. Physical Hybrid-ARQ Indicator Channel (PHICH), Physical Control Format Indicator Channel (PCFICH), Physical Downlink Control Channel (PDCCH): channels for providing a control channel necessary for the UE to receive PDCCH and transmitting ACK/NACK of HARQ operation for uplink data transmission

In addition to the above signals, zero power CSI-RS can be configured in order for the UEs within the corresponding cells to receive the CSI-RSs transmitted by different eNBs in the LTE-A system. The zero power CSI-RS (muting) can be mapped to the positions designated for CSI-RS, and the UE receives the traffic signal skipping the corresponding radio resource in general. In the LTE-A system, the zero power CSI-RS is referred to as muting. The zero power CSI-RS (muting) by nature is mapped to the CSI-RS position without transmission power allocation.

In FIG. **2**, the CSI-RS can be transmitted at some of the positions marked by A, B, C, D, E, F, G, H, I, and J, according to the number of number of antennas transmitting CSI-RS. Also, the zero power CSI-RS (muting) can be mapped to some of the positions A, B, C, D, E, F, G, H, I, and J. The CSI-RS can be mapped to 2, 4, or 8 REs, according to the number of antenna ports for transmission. For two antenna ports, half of a specific pattern is used for CSI-RS transmission. For four antenna ports, an entire specific pattern is used for CSI-RS transmission. For eight antenna ports, two patterns are used for CSI-RS transmission. Muting is always performed by pattern. Specifically, although muting may be applied to a plurality of patterns, if the muting positions mismatch CSI-RS positions, it cannot be partially applied to one pattern.

When transmitting CSI-RSs of two antenna ports, the CSI-RSs are mapped to two consecutive REs in the time domain and distinguished from each other using orthogonal codes. When transmitting CSI-RSs of four antenna ports, the CSI-RSs are mapped in the same way of mapping the two more CSI-RSs to two more consecutive REs. This is applied to the case of transmitting CSI-RSs of eight antenna ports.

In a cellular system, the reference signal has to be transmitted for downlink channel state measurement. In the case of the 3GPP LTE-A system, the UE measures the channel state with the eNB using the CSI-RS transmitted by the eNB. The channel state is measured in consideration of a few factors including downlink interference. The downlink interference includes the interference caused by the antennas of neighbor eNBs and thermal noise that are important in determining the downlink channel condition. For example, when an eNB with one transmit antenna transmits a reference signal to a UE with one receive antenna, the UE has to determine an energy per symbol that can be received in downlink and an interference amount that may be received for the duration of receiving the corresponding symbol to calculate Es/Io from the received reference signal. The calculated Es/Io is reported to the eNB such that the eNB determines the downlink data rate for the UE.

In the LTE-A system, the UE feeds back the information on the downlink channel state for use in downlink scheduling of the eNB. Specifically, the UE measures the reference signal transmitted by the eNB in downlink and feeds back the information estimated from the reference signal to the eNB in the format defined in LTE/LTE-A standard. In LTE/LTE-A, the UE feedback information includes the following three indicators:

1. RI: number of spatial layers that can be supported by the current channel experienced at the UE

2. PMI: precoding matrix recommended by the current channel experienced at the UE

3. CQI: maximum possible data rate that the UE can receive signals in the current channel state. CQI may be replaced with the SINR, a maximum error correction code rate and modulation scheme, or per-frequency data efficiency that can be used in a similar way to the maximum data rate.

The RI, PMI, and CQI have associated meanings. For example, the precoding matrix supported in LTE/LTE-A is configured differently per rank. Accordingly, the PMI value 'X' is interpreted differently for the cases of RI set to 1 and RI set to 2. Also, when determining CQI, the UE assumes that the PMI and RI, which it has reported, are applied by the eNB. Specifically, if the UE reports RI_X, PMI_Y, and CQI_Z; this means that the UE is capable of receiving the signal at the data rate corresponding to CQI_Z when the rank RI_X and the precoding matrix PMI_Y are applied. In this way, the UE calculates CQI with which the optimal performance is achieved in real transmission under the assumption of the transmission mode to be selected by the eNB.

Typically, in FD-MIMO using a plurality of transmit antennas, the number of CSI-RSs has to increase in proportion to the number of transmit antennas. For an LTE/LTE-A using 8 transmit antennas, the eNB has to transmit CSI-RSs of 8 ports to the UE for downlink channel state measurement. In order to transmit 8-port CSI-RSs, 8 REs must be allocated for CSI-RS transmission in one RB. For example, the REs indicated by A and B can be used for CSI-RS transmission of the corresponding eNB. When applying a CSI-RS transmission scheme of LTE/LTE-A to FD-MIMO, the CSI-RS transmission resource increases in proportion to the number of transmit antennas. Specifically, the eNB having 128 transmit antennas has to transmit CSI-RS on 128 REs in one RB. Such a CSI-RS transmission scheme consumes excessive radio resources, and thus, causes a shortage of resources for data transmission.

For the eNB having a plurality of transmit antennas, an FD-MIMO may transmit CSI-RSs on N dimensions such that the UE performs channel measurements for a plurality of transmit antennas without excessive resource allocation for CSI-RS transmission. As shown in FIG. **1** where the transmit

antennas **110** of the eNB are arranged 2-dimensionally, the CSI-RSs may be transmitted as separated into 2 dimensions. One CSI-RS is used as a horizontal CSI-RS for acquiring the horizontal direction channel information, while the other CSI-RS is used as a vertical CSI-RS for acquiring vertical direction channel information.

FIG. **3** is a diagram illustrating a mechanism of CSI-RS transmission in FD-MIMO system, according to an embodiment of the present invention.

Referring to FIG. **3**, the eNB operating in FD-MIMO mode has total 32 antennas. The number of antennas may vary depending on the embodiment. In FIG. **3**, 32 antennas **300** are indicated by A**0**, . . . , A**3**, B**0**, . . . , B**3**, C**0**, . . . , C**3**, D**0**, . . . , D**3**, E**0**, . . . , E**3**, F**0**, . . . , F**3**, G**0**, . . . , G**3**, and H**0**, . . . , H**3**. Two CSI-RSs are transmitted through the 32 antennas. The antenna ports corresponding to H-CSI-RS for use in measuring horizontal channel state consist of the following 8 antenna ports.

1. H-CSI-RS port **0**: group of antennas A**0**, A**1**, A**2**, and A**3**
2. H-CSI-RS port **1**: group of antennas B**0**, B**1**, B**2**, and B**3**
3. H-CSI-RS port **2**: group of antennas C**0**, C**1**, C**2**, and C**3**
4. H-CSI-RS port **3**: group of antennas D**0**, D**1**, D**2**, and D**3**
5. H-CSI-RS port **4**: group of antennas E**0**, E**1**, E**2**, and E**3**
6. H-CSI-RS port **5**: group of antennas F**0**, F**1**, F**2**, and F**3**
7. H-CSI-RS port **6**: group of antennas G**0**, G**1**, G**2**, and G**3**
8. H-CSI-RS port **7**: group of antennas H**0**, H**1**, H**2**, and H**3**

The grouping a plurality of antennas into one CSI-RS port is a concept referred to as antenna virtualization. Typically, antenna virtualization is performed through linear combination of a plurality of antennas. The antenna ports corresponding to V-CSI-RS for use in measuring vertical channel state consist of the following 4 antenna ports.

1. V-CSI-RS port **0**: group of antennas A**0**, B**0**, C**0**, D**0**, E**0**, F**0**, G**0**, and H**0**
2. V-CSI-RS port **1**: group of antennas A**1**, B**1**, C**1**, D**1**, E**1**, F**1**, G**1**, and H**1**
3. V-CSI-RS port **2**: group of antennas A**2**, B**2**, C**2**, D**2**, E**2**, F**2**, G**2**, and H**2**
4. V-CSI-RS port **3**: group of antennas A**3**, B**3**, C**3**, D**3**, E**3**, F**3**, G**3**, and H**3**

It is assumed that a plurality of antennas are arranged 2-dimensionally as described above. The antennas are arranged orthogonally forming M rows in the vertical direction and N columns in the horizontal direction. The UE is capable of measuring FD-MIMO channels using N H-CSI-RS ports and M V-CSI-RS ports. As aforementioned, if two CSI-RSs are used, the channel state information can be acquired using M+N CSI-RS ports for M×N transmit antennas. Since the channel information on a large number of transmit antennas is acquired using a relatively small number of CSI-RS ports, it is advantageous in reducing the CSI-RS overhead. Although embodiments of the present invention are directed to channel information on the FD-MIMO transmit antennas using two CSI-RSs, this approach can be applied to the cases of using two or more CSI-RSs.

In FIG. **3**, the RSs of the 32 transmit antennas are mapped to 8 H-CSI-RS ports and 4 V-CSI-RS ports, and the UE measures the radio channels using the CSI-RSs of the FD-MIMO system. The H-CSI-RS can be used for estimating the horizontal angle between the UE and the eNB transmit antennas as denoted by reference numeral **310**, while the V-CSI-RS can be used for estimating the vertical angle between the UE and the eNB transmit antennas as denoted by reference numeral **320**.

The following abbreviations are used throughout the specification.

RI_H: RI generated based on H-CSI-RS for feedback to the eNB

RI_V: RI generated based on V-CSI-RS for feedback to the eNB

RI_{HV}: RI generated based on H-CSI-RS and V-CSI-RS for feedback to the eNB

PMI_H: PMI generated based on H-CSI-RS for feedback to the eNB

PMI_V: PMI generated based on V-CSI-RS for feedback to the eNB

CQI_H: UE-recommended data rate generated under the assumption that only the horizontal direction precoding matrix is applied

CQI_V: UE-recommended data rate generated under the assumption that only the vertical precoding matrix is applied

CQI_{HV}: UE-recommended data rage generated under the assumption that both the horizontal and vertical precoding matrices are applied

The following description is directed to the case of using the horizontal direction channel state information and the vertical direction channel state information. When an eNB operates with two or more CSI-RSs, however, other types of channel state information can also be applied to the horizontal and vertical direction channel state information. In an embodiment of the present invention where the CSI-RS mapped to an antenna port from the first view point (first CSI-RS) and the CSI-RS mapped to an antenna port from the second view point (second CSI-RS) are used, the UE is capable of acquiring the channel state information (first and second channel state information) based on the two respective CSI-RSs and the channel state information (third channel state information) based on both the CSI-RSs. The configuration described in the following description is applicable to various embodiments in similar manner. The following description is directed to an embodiment of the present invention using V-CSI-RS and H-CSI-RS.

In the following description, the channel state information corresponding to the vertical direction CSI-RS is referred to as vertical direction channel state information. The vertical direction channel state information includes at least one of RI, PMI, and CQI acquired based on the vertical direction CSI-RS.

In the following description, the channel state information corresponding to the horizontal direction CSI-RS is referred to as horizontal direction channel state information. The horizontal channel state information includes at least one of RI, PMI, and CQI acquired based on the horizontal direction CSI-RS.

When the eNB sends the UE two or more CSI-RSs, the UE is capable of transmitting the channel state information corresponding to the respective CSI-RSs. Each of the channel state information includes at least one of RI, PMI, and CQI. However, the UE may acquire the channel state information based on the two or more CSI-RSs in an embodiment of the present invention. Acquisition of the channel state information is described in greater detail below.

FIG. **4** is a diagram illustrating a mechanism of transmitting RI, PMI, and CQI based on two CSI-RS in the feedback method, according to an embodiment of the present disclosure. The UE reports the radio channel state information of the FD-MIMO to the eNB by transmitting RI, PMI, and CQI for the respective CSI-RSs.

In FIG. **4**, the arrow indicates how a certain type of channel state information is related to other types of channel state

information. The arrow starting from RIv **400** and ending at PMIv **410** indicates that the PMIv **410** is interpreted differently according to the value of RIv **400**. Specifically, the arrow means that the UE uses the value of the RI_V **400** to interpret CQI_V **420**. Likewise, the UE uses the value of RI_H **430** to interpret PMI_H **440**.

In FIG. **4**, the UE measures the V-CSI-RS and transmits the channel state information in the method indicated by "Feedback **1**". The UE also measures the H-CSI-RS and transmits the channel state information in the method indicated by "Feedback **2**". Here, RI, PMI, and CQI are transmitted in the state of being correlated among each other. In the case of "Feedback **1**", the RI_V **400** notifies of the rank of the precoding matrix indicated by the PMI_V **410**. Also, the CQI_V **420** indicates the data rate at which the UE can receive data or a corresponding value in the case of applying the precoding matrix of the corresponding rank which is indicated by the PMI_V **410**, when the transmission is performed at the rank indicated by the RI_V **400**. In the case of "Feedback **2**", the RI **430**, the PMI **440**, and CQI **450** are transmitted in the state of being correlated among each other like the case of "Feedback **1**".

As shown in FIG. **4**, one of the channel state information report methods may configure a plurality of feedback for a plurality of transmit antennas of the FD-MIMO eNB, and make the UE report channel state information to the eNB. This method is advantageous in that the UE is capable of generating and reporting channel state information for FD-MIMO without extra implementation.

However, in the channel state information report method of FIG. **4**, it is difficult to achieve enough throughput of the FD-MIMO system. This is due to the fact that although the UE configures a plurality of feedback to report the channel state information to the eNB, the CQI is generated without an assumption on the precoding when the FD-MIMO is applied.

When a plurality of transmit antennas **110** of the FD-MIMO system are arranged 2-dimentionally, as shown in FIG. **3**, both the vertical direction precoding matrix and the horizontal direction precoding matrix are applied to the signal transmitted by the UE. Specifically, the UE receives the signal to which the precoding matrices corresponding to the PMI_H **440** and the PMI_V **410** other than the signal to which one of the PMI_H **440** and the PMI_V **410**.

If only the CQI_H **450** and the CQI_V **420** corresponding to precodings indicated by the respective PMI_H **440** and PMI_V **410** are reported to the eNB, the eNB has to determine the CQI to which both the vertical and horizontal direction precoding matrices are applied, without receipt of such a CQI. If the eNB determines the CQI to which both the vertical and horizontal direction precoding matrices are applied arbitrarily, this may cause degradation of system performance.

As described above, one of the methods for mitigating the use of radio resource for CSI-RS transmission in the FD-MIMO system is to make the UE measure a plurality CSI-RSs capable of efficiently estimating a plurality of transmit antennas. Each CSI-RS can be used for the UE to measure the channel state of one of a plurality dimensions for measuring one radio channel. This method requires a relatively small amount of radio resources for CSI-RS transmission as compared to the method of allocating a unique CSI-RS ports for the respective transmit antennas. For example, when using two CSI-RSs in the vertical and horizontal direction for the transmit antennas of the FD-MIMO that are arranged in the form of a rectangle, the UE is capable of efficiently measuring the channel state. Embodiments of the present invention propose a novel technology and apparatus that is capable of allowing the UE to measure a plurality of CSI-RSs and efficiently report the channel state information in the FD-MIMO system including a plurality of transmit antennas.

FIG. **5** is a diagram illustrating a mechanism of transmitting channel state information, according to an embodiment of the present disclosure.

In FIG. **5**, the channel state information corresponding to the two CSI-RSs are reported as in the embodiment of FIG. **4**. The channel state information transmission method is indicated by "Feedback **1**" as in the embodiment of FIG. **4**. Specifically, the UE measures V-CSI-RS to report RI_V **500**, PMI_V **510**, and CQI_V **520** to the eNB. The embodiment of FIG. **5** differs from the embodiment of FIG. **4** in the procedure of indication with "Feedback **2**". The UE reports the CQI for the case where the precoding is applied in both the vertical and horizontal directions, i.e., CQI_{HV} **550**, to the eNB. Specifically, the UE reports to the eNB the most recent PMI_V **510** generated in the procedure indicated with "Feedback **1**" and CQI_{HV} **550** generated in the case where the precodings indicated by PMI **540**, which is determined optimal based on the H-CSI-RS measurement.

In the embodiment of FIG. **5**, the UE measures the V-CSI-RS to generate the RI_V **500**, which is reported to the eNB. The UE determines the PMI_V **510** optimal to the corresponding rank **500** and reports the CQI_V **520** when the precoding indicated by the PMI_V **510** is applied. The UE measures H-CSI-RS to generate RI **530**, which is reported to the eNB. The UE reports to the eNB the CQI_{HV} **550** generated by applying the precoding indicated by PMI **540** optimal to the corresponding rank **530** and the precoding indicated by the previously transmitted PMI_V **510**.

As shown in FIG. **5**, in order for the UE to report the CQI value for the case where the precoding matrix indicated by the PMI_H **540** and the precoding matrix indicated by the PMI_V **510** are allocated simultaneously to the eNB, the following may be required.

First, it is required to define a function for determining whether to take two PMIs into consideration to determine at least one of two CQIs. Specifically, the eNB notifies the UE of the correlation of the feedback information in configuring a plurality of feedbacks to the UE, and the UE generates CQI based thereon. In the case of FIG. **5**, a control message instructing to calculate the second CQI, i.e., the CQI_{HV} **550**, by applying the first PMI, i.e. the PMI_V **510**, and the second PMI, i.e. the PMI_H **540**, together has to be transmitted from the eNB to the UE.

Second, it is required to define how to determine CQI in the case of applying a plurality of precodings. When calculating a CQI when only one precoding is applied, the UE calculates CQI under the assumption that the precoding indicated by RI and PMI it has reported is applied in downlink. However, in the case of the CQI_{HV} **550**, the UE calculates CQI under the assumption that two precodings are simultaneously applied in downlink. The UE may interpret the application of two precodings as the Kronecker product. The Kronecker product is defined with two matrices as shown in Equation (1) below.

$$A \otimes B = \begin{bmatrix} a_{11}B & \dots & a_{1n}B \\ \vdots & \ddots & \vdots \\ a_{m1}B & \dots & a_{mn}B \end{bmatrix} \quad (1)$$

In Equation (1), A and B denote matrices, and a_{11} to a_{mn} denote elements of matrix A, and a_{ij} denotes the element at i_{th} row and j_{th} column.

In Equation (1), the UE is capable of acquiring the precoding matrix for the case where two precoding matrices are

applied simultaneously by replacing A and B with the precoding matrices indicated by the PMI_H **540** and the PMI_V **510**. When calculating the CQI_{HV} **550**, the UE calculates the CQI_{HV} **550** under the assumption that the precoding matrix acquired by applying the Equation (1) to the precoding matrices indicated by the PMI_H **540** and PMI_V **510** is applied in downlink.

In order to acquire the precoding matrix for the case where the two precoding matrices are applied using the Kronecker product of Equation (1), it is necessary for the UE and eNB to operate differently depending on the rank reported by the UE. Three embodiments are proposed for this purpose.

Rank-Related Embodiment 1

The eNB configures one of the RI_V **500** and the RI_H**530** with rank 1always. For example, if the CQI_{HV} **550** is reported along with the RI_H**530** to the eNB, the RI_V **500** is restricted to be always set to 1. The rank supported in the case where two precoding matrices are applied simultaneously is determined depending on the RI_H**530**. Specifically, when the RI_H**530** is set to 1, the UE is capable of supporting rank 1; and when the RI_H**530** is set to 2, the UE is capable of supporting rank 2. The UE and the eNB operate in the FD-MIMO system under this assumption. Although two CSI-RSs are assumed in this embodiment of the present invention, if the number of CSI-RS is 3 or more, RIs have to be set to 1 with the exception of the RI corresponding to one CSI-RS.

Rank-Related Embodiment 2

When the vertical and horizontal direction precoding matrices are applied simultaneously, the eNB and the UE determine the rank supportable by the UE using Equation (2) set forth below.

$$\text{rank}_{HV}=\text{rank}(RI_H)\times\text{rank}(RI_V) \quad (2)$$

Specifically, the UE and the eNB exchange the channel state information under the assumption that the rank for the case where the vertical and horizontal direction precoding matrices are applied simultaneously is the product of the two ranks supportable in the respective directions. For example, if the UE reports the RI_H set to 2 and RI_V set to 3 to the eNB, the eNB and the UE assume that the rank for the case where all of the precoding matrices are applied is 6.

In LTE/LTE-A, if the UE reports to the eNB the RI corresponding to rank 2 or higher, two CQI values are reported to the eNB. This is due to the fact that the eNB transmits two codewords to the UE, and thus, the UE has to separately report the CQIs corresponding to respective codewords.

When the method of Equation (2) is applied to the embodiment of FIG. **5**, if the rank for the case where the precodings obtained by Equation (2) is 2 or higher although the RI_H **530** is set to 1, the UE transmits the two CQIs in the form of the CQI_{HV} **550**. Also, if the rank for the case where all of the precodings obtained by Equation (2) is 2 or higher, the eNB receives the two CQIs under the assumption that they are transmitted in the form of the CQI_{HV} **550**.

In the method of measuring, at the UE, the horizontal and vertical direction channel state information corresponding to two CSI-RS and reporting the channel state information to the eNB, as shown in FIG. **4** or **5**, transmission of "Feedback **1**" and "Feedback **2**" may cause collision. The term 'collision' refers to a situation in which transmission of "Feedback **1**" and "Feedback **2**" is required at the same time. If any collision is predicted, the UE may report the channel state information of one of "Feedback **1**" and "Feedback **2**". The FD-MIMO operation with the configuration of a plurality of feedback, as shown in FIG. **4** or **5**, may cause the channel state information to be partially missed.

FIG. **6** is a diagram illustrating a mechanism of transmitting channel state information, according to an embodiment of the present invention.

Although the UE reports the channel state information corresponding to two CSI-RSs, the feedback method of FIG. **6** differs from that of FIG. **4** in that the feedback is completed in only one feedback process. Referring to FIG. **6**, the UE transmits RI_{HV} **600** to report the horizontal and vertical direction ranks Table 1 shows horizontal and vertical direction ranks (first second ranks)

TABLE 1

RI_{HV}	Horizontal direction rank	Vertical direction rank
000	1	1
001	2	1
010	3	1
011	4	1
100	1	2
101	2	2
110	3	2
111	4	2

The eNB may acquire the horizontal and vertical direction ranks from the RI_{HV} **600** transmitted by the UE. The UE determines the value of the RI_{HV} **600** based on both the two CSI-RS, i.e., H-CSI-RS and V-CSI-RS. The eNB checks the information on the horizontal and vertical direction precodings and UE-supportable data rate based on PMIs **610** and **630** and CQIs **620** and **640** corresponding to the H-CSI-RS and V-CSI-RS. Since the horizontal and vertical direction PMIs and CQIs are transmitted alternately in one feedback process, it is possible to avoid the collisions of the feedback transmissions that may occur in the embodiments of FIGS. **4** and **5**. In FIG. **6**, the horizontal and vertical direction ranks may have different values depending on the value of the RI_{HV} **600** reported by the UE. Specifically, the precoding matrix indicated by the PMI_H **610** is determined depending on the horizontal direction PMI indicated by the value of the RI_{HV} **600**. The UE also transmits CQI obtained under the assumption of the case where the precoding matrix indicated by the RI_H **610** is applied, i.e., the CQI_H **620**. In order to determine the values of the PMI_H **610** and the CQI_H **620**, the UE measures the H-CSI-RS. Likewise, the precoding matrix indicated by the PMI_V **630** is determined depending on the vertical direction rank indicated by the RI_{HV} **600**. The UE also transmits CQI obtained under the assumption of the case where the precoding matrix indicated by the PMI_V**630** is applied, i.e., the CQI_V **640**. In order to determine the values of PMI_V **630** and CQI_V **640**, the UE measures V-CSI-RS.

Referring to FIG. **6**, the UE alternately transmits the horizontal channel state information **610** and **620** and the vertical channel state information **630** and **640**. It is also possible to alternately transmit the horizontal and vertical channel state information in the same interval.

In a real system, however, such a method may not be appropriate. Specifically, it may advantageous for the UE to report specific direction channel state information at an interval shorter than that of the other direction channel state information in view of system throughput optimization. In order for the UE to report channel state information corresponding to a plurality of CSI-RSs to the eNB at different intervals, it is preferred for the eNB to perform configuration thereon. Specifically, in the case that the UE reports different direction channel state information to the eNB in one feedback process, the eNB may notify the UE of the following information for configuration thereon.

Feedback interval and frame offset for horizontal direction channel state information (CQI_H, PMI_H), i.e., first channel state information

Feedback interval and frame offset for vertical direction channel state information (CQI_V and PMI_V), i.e., second channel state information

The subframe offset value is the value determining the subframe position for real transmission in a period. For example, if the period is 10 milliseconds (msec) and the subframe offset is 5, this means that the corresponding signal is transmitted at the subframe **5** in the period of 10 milliseconds.

In FIG. **6**, the horizontal and vertical direction ranks reported from the UE to the eNB may be determined depending on different rank restrictions. The rank restriction is to restrict, when the UE measures the RS to determine the rank, the maximum value to the value preconfigured by the eNB. In the mobile communication system, if the eNB is allowed to restrict the maximum value of the rank for the UE, it can be interpreted as a part of the optimization procedure for controlling the system in the eNB-preferred way. In order to apply the rank restriction to the respective horizontal and vertical direction ranks, the eNB may notify the UE of the following information through higher layer signaling or in another method.

1. Maximum value of horizontal direction rank
2. Maximum value of vertical direction rank

FIG. **7** is a diagram illustrating a mechanism of transmitting channel state information, according to another embodiment of the present invention. In the embodiment of FIG. **7**, the UE reports the channel state information to the eNB in one feedback process as in the embodiment of FIG. **6**. However, the embodiment of FIG. **7** differs from the embodiment of FIG. **6** in that the horizontal and vertical direction ranks are reported with RI_H**700** and RI_V**730** separately, rather than with RI_{HV} **600**.

Referring to FIG. **7**, the RI_H **700** is reported and then followed by PMI_H **710** and CQI_H **720** based thereon. Also, the RI_V **730** is reported and then followed by PMI_V **740** and CQI_V **750** based thereon. Although the RI_H**700** and the RI_V **730** are reported separately, the intervals and ranks of the horizontal and vertical channel state information may be configured differently, as in the embodiment of FIG. **6**.

FIG. **8** is a diagram illustrating a mechanism of transmitting channel state information, according to another embodiment of the present invention.

When the UE reports the channel state information corresponding to a plurality of CSI-RSs in a signal feedback process, as in the embodiments of FIGS. **6** and **7**, the absence of the CQI for the case where the horizontal and vertical direction precodings are applied simultaneously may cause system performance degradation, as described above.

Referring to FIG. **8**, the UE transmits RI_{HV} **800** to the eNB. The eNB may acquire or recognize the horizontal and vertical direction ranks based on the RI_{HV} **800**. The UE transmits the horizontal direction channel state information including PMI_H **810** and CQI_H **820**. The UE also transmits PMI_V **830** as the horizontal channel state information, and then the CQI is acquired by taking both the horizontal and vertical direction precodings into account, i.e., CQI_{HV} **840**, along with the PMI_V **830** simultaneously. The CQI_{HV}**840** is the CQI acquired for the case where the horizontal and vertical direction precodings are applied. Accordingly, the rank is also determined as the function of the horizontal and vertical direction ranks The UE assumes the Kronecker product of the two precoding matrices as shown in Equation (1) as the precoding applied for generating the CQI_{HV}**840**.

This method of transmitting the horizontal and vertical direction channel state information and the CQI_{HV} **840** from the UE to the eNB in a signal feedback process, as shown in FIG. **8**, makes it possible to transmit the value of the CQI_{HV} **840** under the assumption of the application of horizontal and vertical direction precodings. However, this method has a shortcoming in that the CQI_H **820** generated under the assumption of the application of only the horizontal direction precoding has a low degree of utilization. In FIG. **8**, the reason for transmitting the CQI_H **820** is because the information on the PMI_H **810** and the PMI_V **830** is required for transmitting CQI assuming horizontal and vertical direction precodings, but only one of the PMIs can be reported at the time of transmitting the CQI_H **820**.

FIG. **9** is a diagram illustrating a mechanism of transmitting channel state information, according to another embodiment of the present invention.

In the channel state information transmission method of FIG. **9**, all CQI values reported from the UE to the eNB are generated under the assumption that the horizontal and vertical direction precodings are applied unlike the embodiment of FIG. **8**. In FIG. **9**, the UE generates CQI_{HV} **930** under the assumption that the horizontal and vertical precoding matrices have been applied as indicated by PMI_V **900** and PMI_H**920**. Specifically, the UE generates the CQI_{HV} **930** transmitted along with the PMI_H**920** under the assumption that both the precoding matrix indicated by the PMI_V **900**, as the most recently transmitted vertical direction precoding-related information, and the precoding matrix indicated by the PMI_H**920** have been applied. Likewise, the UE generates CQI_{HV} **950** transmitted along with PMI_V **940** under the assumption that both the precoding matrix indicated by the PMI_H **920**, as the most recently transmitted horizontal direction precoding-related information, and the precoding matrix indicated by the PMI_V**940** have been applied. The reason for referencing the previously transmitted PMI_H or PMI_V is to prevent a plurality of PMIs from being transmitted in one time duration.

In order to transmit CQI_{HV} at every CQI transmission occasion, as shown in FIG. **9**, it is necessary to restrict the rank in a specific direction. In order to change the horizontal and vertical direction ranks simultaneously, the horizontal and vertical direction precodings also have to be updated according to the changed rank values. CQI_{HV} may be transmitted only after the two precodings have been updated. By taking notice of this, it is assumed that the vertical direction rank is fixed to 1 always in the embodiment of FIG. **9**. Since the vertical direction rank is always 1, the vertical direction rank is not changed, such that the UE is capable of assuming that the precoding matrix indicated by the previously transmitted PMI_V and the precoding matrix indicated by PMI_V are applied simultaneously. Although the description is directed to the case where the vertical direction rank is fixed to 1, the present invention may be embodied in such a way to fix the horizontal direction rank to 1. When the horizontal direction rank is fixed to 1, the UE reports RI_V at every RI transmission occasion instead of RI_H.

In FIG. **9**, the transmission intervals of RI, horizontal direction channel state information **920** and **930**, vertical direction channel state information **940** and **950**, may be configured differently depending on the system environment.

FIG. **10** is a diagram illustrating a mechanism of transmitting channel state information, according to another embodiment of the present invention.

In FIG. **10**, the UE transmits CQI_{HV} under the assumption that the horizontal and vertical direction precodings are applied at every CQI transmission occasion as in FIG. **9**. In

the embodiment of FIG. **10**, however, an extra RI_V **1000** is transmitted to change the vertical direction rank. Specifically, the UE notifies the eNB of the vertical direction rank to the eNB using the RI_V **1000** and reports PMI_V **1010** based thereon. CQI_{HV} **1020** transmitted along with the PMI_V **1010** is generated under the assumption that the precoding matrix indicated by the most recently transmitted RI and PMI and the precoding matrix indicated by the PMI_V **1010** are applied. When the horizontal direction rank is updated with RI_H **1030**, the UE updates PMI_H **1040** based thereon and generates CQI_{HV} **1050** under the assumption that the precoding indicated by the PMI_V **1010** and the precoding indicated by the PMI_H **1040** are applied simultaneously.

In FIG. **10**, the UE may separately update the horizontal and vertical direction ranks Accordingly, the UE calculates the rank to be assumed for generating the channel state information CQI_{HV} **1020** and **1050** using Equation (2). If the product of the ranks indicated by the RI_V **1000** and the RI_H **1030** is assumed as the rank for generating the CQI_{HV} **1050**. Accordingly, if the product of the ranks indicated by the RI_V **1000** and the RI_H **1030** at the time when the CQI_{HV} **1050** is transmitted is 1, the UE transmits one CQI. If the product is equal to or greater than 2, the UE transmits two CQIs.

FIG. **11** is a flowchart illustrating an eNB procedure of configuring channel state information feedback of the UE in a FD-MIMO system, according to an embodiment of the present invention.

In FIG. **11**, the eNB checks the number of transmit antennas of the FD-MIMO transmitter and 2-dimensional arrangement state, in step **1100**. The eNB determines how to configure the horizontal and vertical CSI-RSs for use in measuring the FD-MIMO channel state information, in step **1110**. Although $CSI\text{-}RS_H$ and $CSI\text{-}RS_V$ are configured in an embodiment of the present invention, the present invention may be embodied in such a way of configuring a first type CSI-RS and a second CSI-RS in another format. The configuration on $CSI\text{-}RS_H$ and $CSI\text{-}RS_V$ are informed to the UE through higher layer signaling or in another method, in step **1120**. The eNB notifies the UE of the feedback scheme for the UE to transmit the channel state information corresponding to the $CSI\text{-}RS_H$ and $CSI\text{-}RS_V$, in step **1130**. Finally, the eNB receives the $CSI\text{-}RS_H$ and $CSI\text{-}RS_V$ transmitted by the UE, in step **1140**. The eNB controls the system operation including scheduling based on the received channel state information.

FIG. **12** is a flowchart illustrating a UE procedure for transmitting the channel state information based on the configuration indicated by the eNB in the FD-MIMO system, according to an embodiment of the present disclosure.

The UE receives the information on how to receive the horizontal and vertical direction CSI-RSs, i.e., $CSI\text{-}RS_H$ and $CSI\text{-}RS_V$, from the eNB, in step **1200**. Although $CSI\text{-}RS_H$ and $CSI\text{-}RS_V$ are configured in an embodiment of the present invention, the present invention may be embodied in such a way of configuring a first type CSI-RS and a second CSI-RS in another format. The UE receives CSI feedback configuration information on how to measure the $CSI\text{-}RS_H$ and $CSI\text{-}RS_V$ and reports the channel state information, in step operation **1210**. The UE measures the CSI-RSH and CSI-RSV and transmits channel state information according to the CSI feedback configuration information, in step **1220**. The channel state information is generated and transmitted as described with reference to FIGS. **5** to **10**.

Although the embodiments of FIGS. **11** and **12** are directed to an embodiment in which the eNB transmits CSI-RS and channel state information feedback configuration explicitly, the present invention may be embodied in such a way that the eNB notifies the UE of at least one of CSI-RS transmission position of the eNB, number of CSI-RSs, and number of ports per CSI-RS, and the UE generates and transmits the channel state information according to a feedback configuration predetermined based on the received information. It is enough for the eNB to provide the UE with the information necessary for determining the channel state information generation and transmission method.

FIG. **13** is a block diagram illustrating a configuration of the eNB, according to an embodiment of the present invention.

As shown in FIG. **13**, the eNB includes a controller **1300**, a transmitter **1310**, and a receiver **1320**. The controller **1300** determines the configuration on the plurality of CSI-RSs. The controller **1300** may determine the CSI-RS transmission scheme and the corresponding channel state information generation and feedback scheme. The transmitter **1310** transmits the determination result to the UE. The transmitter **1310** transmits the plurality of CSI-RSs to the UE. The receiver **1320** receives the channel state information corresponding to the CSI-RSs from the UE.

FIG. **14** is a block diagram illustrating a configuration of the UE, according to an embodiment of the present invention.

A receiver **1420** receives the configuration information on the plurality of CSI-RSs, and channel state information generation and feedback scheme. A controller **1400** controls the receiver **1420** to receive the plurality of CSI-RSs transmitted by the eNB. The controller **1400** generates channel state information based on the plurality of CSI-RSs. The controller **1400** controls a transmitter **1410** to transmit the channel state information to the eNB.

As described above, the channel state information feedback method of the present invention is capable of transmitting/receiving channel state information efficiently in a wireless system using a plurality of antennas.

It will be understood that each block of the flowchart illustrations and/or block diagrams, and combinations of blocks in the flowchart illustrations and/or block diagrams, can be implemented by computer program instructions. These computer program instructions may be provided to a processor of a general purpose computer, special purpose computer, or other programmable data processing apparatus to produce a machine, such that the instructions, which execute via the processor of the computer or other programmable data processing apparatus, create means for implementing the functions/acts specified in the flowchart and/or block diagram block or blocks. These computer program instructions may also be stored in a computer-readable memory that can direct a computer or other programmable data processing apparatus to function in a particular manner, such that the instructions stored in the computer-readable memory produce an article of manufacture including instruction means which implement the function/act specified in the flowchart and/or block diagram block or blocks. The computer program instructions may also be loaded onto a computer or other programmable data processing apparatus to cause a series of operational steps to be performed on the computer or other programmable apparatus to produce a computer implemented process such that the instructions which execute on the computer or other programmable apparatus provide steps for implementing the functions/acts specified in the flowchart and/or block diagram block or blocks.

Furthermore, the respective block diagrams may illustrate parts of modules, segments or codes including at least one or more executable instructions for performing specific logic function(s). Moreover, it should be noted that the functions of the blocks may be performed in different order in several modifications. For example, two successive blocks may be

performed substantially at the same time, or may be performed in reverse order according to their functions.

The term "module" according to embodiments of the present invention, means, but is not limited to, a software or hardware component, such as a Field Programmable Gate Array (FPGA) or Application Specific Integrated Circuit (ASIC), which performs certain tasks. A module may advantageously be configured to reside on the addressable storage medium and configured to be executed on one or more processors. Thus, a module may include, by way of example, components, such as software components, object-oriented software components, class components and task components, processes, functions, attributes, procedures, subroutines, segments of program code, drivers, firmware, microcode, circuitry, data, databases, data structures, tables, arrays, and variables. The functionality provided for in the components and modules may be combined into fewer components and modules or further separated into additional components and modules. In addition, the components and modules may be implemented such that they execute one or more CPUs in a device or a secure multimedia card.

While the invention has been shown and described with reference to certain embodiments thereof, it will be understood by those skilled in the art that various changes in form and detail may be made therein without departing form the spirit and scope of the invention as defined by the appended claims.

What is claimed is:

1. A method for transmitting channel state information of a terminal, the method comprising:

receiving a first channel state information reference signal (CSI-RS) and a second CSI-RS from a base station;

generating channel state information (CSI) based on both the first CSI-RS and the second CSI-RS; and

transmitting the CSI to the base station,

wherein the CSI includes at least one of a channel quality indicator (CQI) or a rank indicator (RI) based on both the first CSI-RS and the second CSI-RS.

2. The method of claim **1**, wherein generating the CSI comprises:

acquiring a first precoding matrix indicator (PMI) corresponding to the first CSI-RS and a second PMI corresponding to the second CSI-RS; and

generating the channel quality indicator (CQI) included in the CSI based on the first PMI and the second PMI, if the first PMI and the second PMI are applied as the CSI.

3. The method of claim **2**, further comprising:

transmitting the first PMI at a first time to the base station; and

transmitting the second PMI at a second time to the base station,

wherein transmitting the CSI comprises transmitting the CQI and the second PMI at a same time.

4. The method of claim **1**, wherein generating the CSI comprises:

acquiring a first RI corresponding to the first CSI-RS and a second RI corresponding to the second CSI-RS; and

generating the RI included in the CSI by combining the first RI and the second RI as the CSI.

5. The method of claim **1**, wherein the first CSI-RS corresponds to antenna ports aligned linearly in a first direction among antennas arranged in a grid formation, and the second CSI-RS corresponds to antenna ports aligned linearly in a second direction among the antennas arranged in the grid formation.

6. The method of claim **1**, wherein generating the CSI comprises:

receiving an indicator that indicates whether to consider both the first CSI-RS and the second CSI-RS in generating the CSI from the base station; and

if the indicator indicates to consider both the first CSI-RS and the second CSI-RS, generating the CSI by taking both the first CSI-RS and the second CSI-RS into consideration.

7. A terminal for transmitting channel state information, the terminal comprising:

a transceiver configured to transmit and receive a signal; and

a controller configured to receive a first channel state information reference signal (CSI-RS) and a second CSI-RS from a base station, and to generate channel state information (CSI) based on both the first CSI-RS and the second CSI-RS, and to transmit the CSI to the base station,

wherein the CSI includes at least one of a channel quality indicator (CQI) or a rank indicator (RD based on both the first CSI-RS and the second CSI-RS.

8. The terminal of claim **7**, wherein the controller is further configured to acquire a first precoding matrix indicator (PMI) corresponding to the first CSI-RS and a second PMI corresponding to the second CSI-RS, and to generate the CQI included in the CSI based on the first PMI and the second PMI, if the first PMI and the second PMI are applied as the CSI.

9. The terminal of claim **8**, wherein the controller is further configured to acquire a first RI corresponding to the first CSI-RS and a second RI corresponding to the second CSI-RS and to generate the RI included in the CSI by combining the first RI and the second RI as the CSI.

10. The terminal of claim **9**, wherein the controller is configured to transmit the first PMI at a first time to the base station, and to transmit the second PMI and the CQI simultaneously at a second time to the base station.

11. The terminal of claim **8**, wherein the first CSI-RS corresponds to antenna ports aligned linearly in a first direction among antennas arranged in a grid formation, and the second CSI-RS corresponds to antenna ports aligned linearly in a second direction among the antennas arranged in the grid formation.

12. The terminal of claim **7**, wherein the controller is configured to receive an indicator that indicates whether to consider both the first CSI-RS and the second CSI-RS in generating the CSI from the base station and, if the indicator indicates to consider both the first CSI-RS and the second CSI-RS, to generate the CSI by taking both the first CSI-RS and the second CSI-RS into consideration.

13. A method of a base station for supporting transmitting channel state information of a terminal, the method comprising:

configuring a first Channel State Information Reference Signal (CSI-RS) and a second CSI-RS based on a number of transmit antennas and an arrangement state of the transmit antennas the base station;

transmitting the first CSI-RS and the second CSI-RS to the terminal; and

receiving Channel State Information (CSI) based on both the first CSI-RS and the second CSI-RS from the terminal,

wherein the CSI includes at least one of a channel quality indicator (CQI) or a rank indicator (RI) based on both the first CSI-RS and the second CSI-RS.

14. The method of **13**, wherein the first CSI-RS corresponds to antenna ports aligned linearly in a first direction among antennas arranged in a grid formation, and the second CSI-RS corresponds to antenna ports aligned linearly in a second direction among the antennas arranged in the grid formation.

15. The method of claim **13**, further comprising:

receiving a first precoding matrix indicator (PMI) corresponding to the first CSI-RS at a first time from the terminal; and

receiving a second PMI corresponding to the second CSI-RS at a second time to the terminal,

wherein receiving the CSI comprises the CQI and the second PMI at a same time.

16. The method of claim **13**, further comprising:

transmitting an indicator that indicates whether to consider both the first CSI-RS and the second CSI-RS in generating the CSI to the terminal.

17. A base station for supporting transmitting channel state information, the base station comprising:

a transceiver configured to transmit and receive a signal;

a controller configured to configure a first channel state information reference signal (CSI-RS) and a second CSI-RS based on a number of transmit antennas and an arrangement state of the base station, to transmit the first CSI-RS and the second CSI-RS to the terminal, and to receive Channel State Information (CSI) based on both the first CSI-RS and the second CSI-RSs from the terminal,

wherein the CSI includes at least one of a channel quality indicator (CQI) or a rank indicator (RI) based on both the first CSI-RS and the second CSI-RS.

18. The base station of **17**, wherein the first CSI-RS corresponds to antenna ports aligned linearly in a first direction among antennas arranged in a grid formation, and the second CSI-RS corresponds to antenna ports aligned linearly in a second direction among the antennas arranged in the grid formation.

19. The base station of **17**, wherein the controller is further configured to receive a first precoding matrix indicator (PMI) corresponding to the first CSI-RS at a first time from the terminal, and to receive a second PMI corresponding to the second CSI-RS at a second time to the terminal,

wherein receiving the CSI comprises the CQI and the second PMI at a same time.

20. The base station of **17**, wherein the controller is further configured to transmit an indicator that indicates whether to consider both the first CSI-RS and the second CSI-RS in generating the CSI to the terminal.

* * * * *