US009257068B2

(12) **United States Patent**
Kim et al.

(10) **Patent No.: US 9,257,068 B2**
(45) **Date of Patent: Feb. 9, 2016**

(54) **ORGANIC LIGHT EMITTING DISPLAY DEVICE INCLUDING A REDUNDANT ELEMENT FOR A TEST GATE LINE**

(71) Applicants: **Young-Kwang Kim**, Yongin (KR); **Hyun-Uk Oh**, Yongin (KR)

(72) Inventors: **Young-Kwang Kim**, Yongin (KR); **Hyun-Uk Oh**, Yongin (KR)

(73) Assignee: **SAMSUNG DISPLAY CO., LTD.**, Yongin, Gyeonggi-Do (KR)

(*) Notice: Subject to any disclaimer, the term of this patent is extended or adjusted under 35 U.S.C. 154(b) by 353 days.

(21) Appl. No.: **13/960,115**

(22) Filed: **Aug. 6, 2013**

(65) **Prior Publication Data**

US 2014/0167769 A1 Jun. 19, 2014

(30) **Foreign Application Priority Data**

Dec. 14, 2012 (KR) 10-2012-0146369

(51) **Int. Cl.**
G09G 3/00 (2006.01)
G09G 3/32 (2006.01)

(52) **U.S. Cl.**
CPC ***G09G 3/3208*** (2013.01); ***G09G 3/006*** (2013.01); *G09G 2300/0426* (2013.01); *G09G 2330/04* (2013.01)

(58) **Field of Classification Search**
CPC . G09G 3/006; G09G 3/3208; G09G 2230/04; G09G 2300/0426
See application file for complete search history.

(56) **References Cited**

U.S. PATENT DOCUMENTS

2008/0054798 A1 3/2008 Jeong et al.
2008/0068309 A1* 3/2008 Kwak G09G 3/006 345/82
2009/0278835 A1* 11/2009 Ka G09G 3/006 345/211
2011/0043500 A1 2/2011 Kwak et al.
2011/0080173 A1 4/2011 Kim et al.
2011/0175882 A1* 7/2011 Stryakhilev G09G 3/3233 345/211

FOREIGN PATENT DOCUMENTS

KR 10-0732819 B1 6/2007
KR 10-1015312 B1 2/2011
KR 10-2011-0037638 A 4/2011

* cited by examiner

Primary Examiner — Jeff Natalini
(74) *Attorney, Agent, or Firm* — Lee & Morse, P.C.

(57) **ABSTRACT**

An organic light emitting display device according to example embodiments includes a display unit, a test data line to which a test data voltage is applied during a sheet unit test, a test gate line to which a first voltage is applied during the sheet unit test and to which a second voltage is applied during a normal operation of the organic light emitting display device, a plurality of test transistors configured to selectively couple the test data line to a plurality of data lines in the display unit in accordance with a voltage provided by the test gate line, and at least one redundant element configured to maintain the test gate line at the second voltage during the normal operation even if the test gate line is damaged.

20 Claims, 9 Drawing Sheets

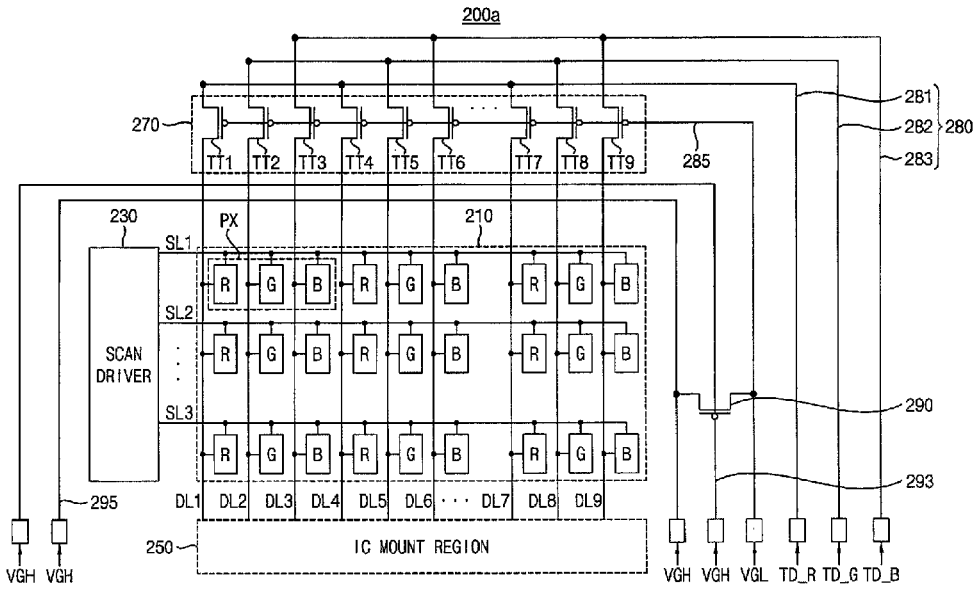

FIG. 1

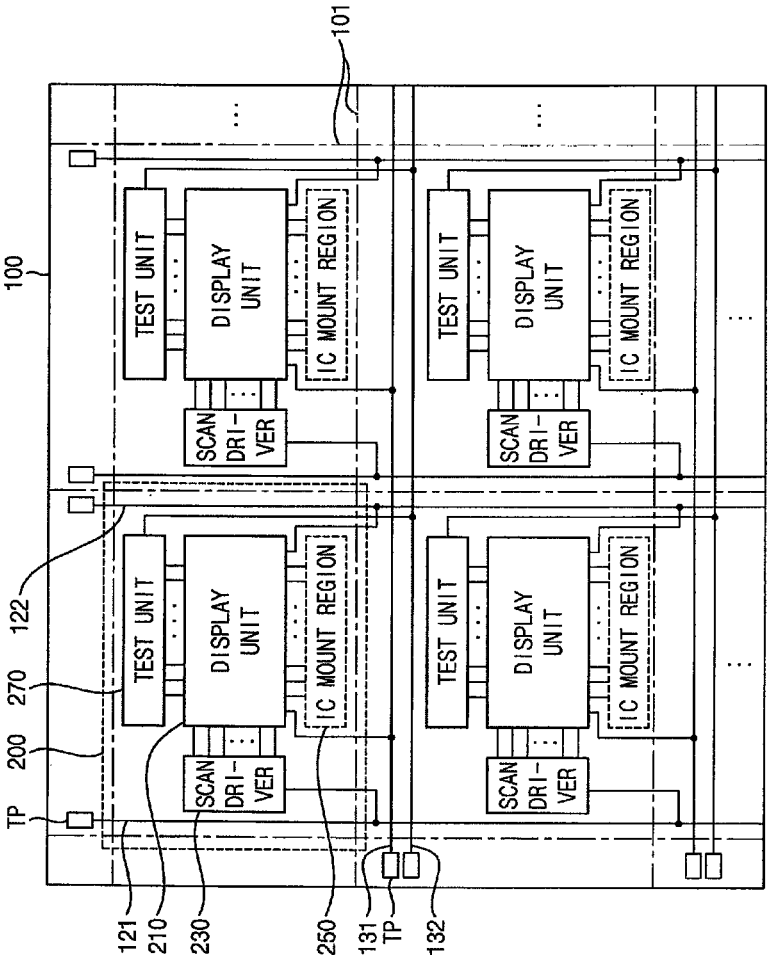
100
101
TEST UNIT
DISPLAY UNIT
IC MOUNT REGION
SCAN DRI-VER
122
270
200
TP
121
210
230
250
131
TP
132

FIG. 2A

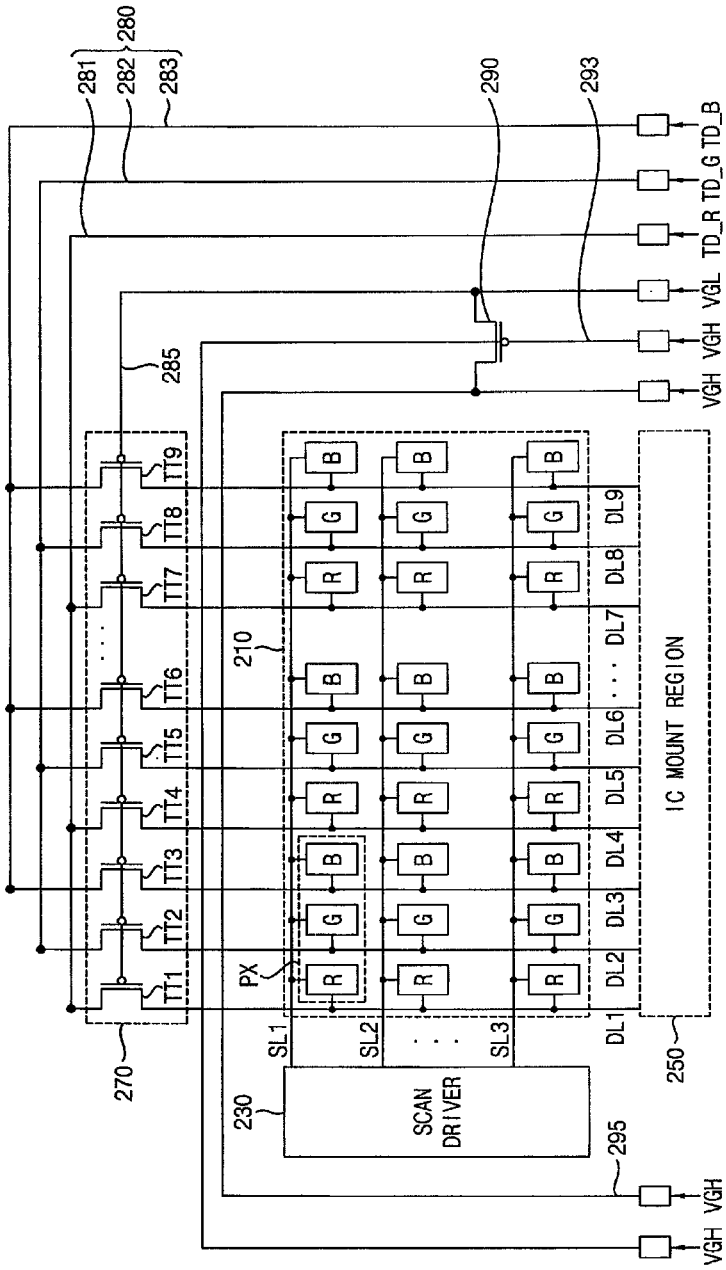
200a
280
281
282
283
290
293
285
TD_B
TD_G
TD_R
VGL
VGH
VGH
TT1
TT2
TT3
TT4
TT5
TT6
TT7
TT8
TT9
270
210
PX
R
G
B
SL1
SL2
SL3
DL1
DL2
DL3
DL4
DL5
DL6
DL7
DL8
DL9
IC MOUNT REGION
250
230
SCAN DRIVER
295
VGH
VGH

FIG. 2B

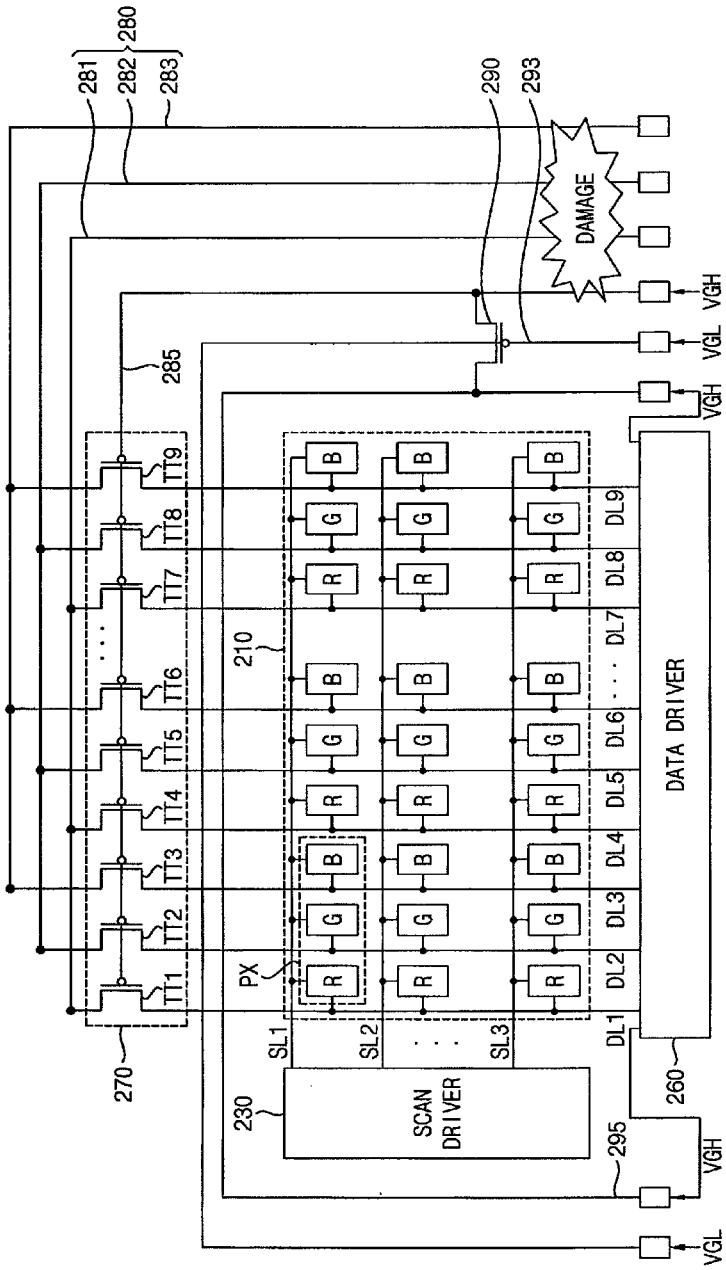
200b
280
281
282
283
290
293
DAMAGE
VGH
VGL
285
TT1
TT2
TT3
TT4
TT5
TT6
TT7
TT8
TT9
270
210
PX
R
G
B
SL1
SL2
SL3
DL1
DL2
DL3
DL4
DL5
DL6
DL7
DL8
DL9
DATA DRIVER
260
230
SCAN DRIVER
295

FIG. 3

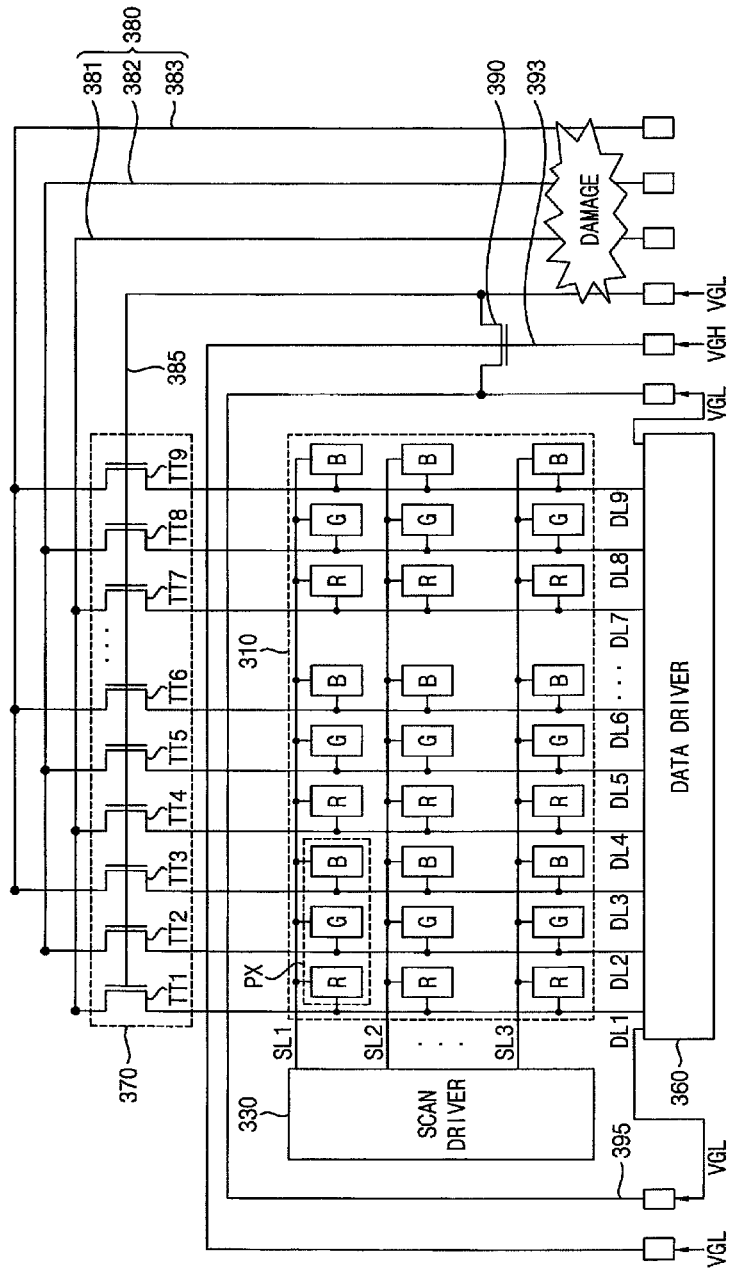
300
380
381
382
383
390
393
DAMAGE
VGL
VGH
VGL
385
TT1
TT2
TT3
TT4
TT5
TT6
TT7
TT8
TT9
370
310
PX
R
G
B
SL1
SL2
SL3
DL1
DL2
DL3
DL4
DL5
DL6
DL7
DL8
DL9
DATA DRIVER
360
330
SCAN DRIVER
395
VGL
VGL

FIG. 4

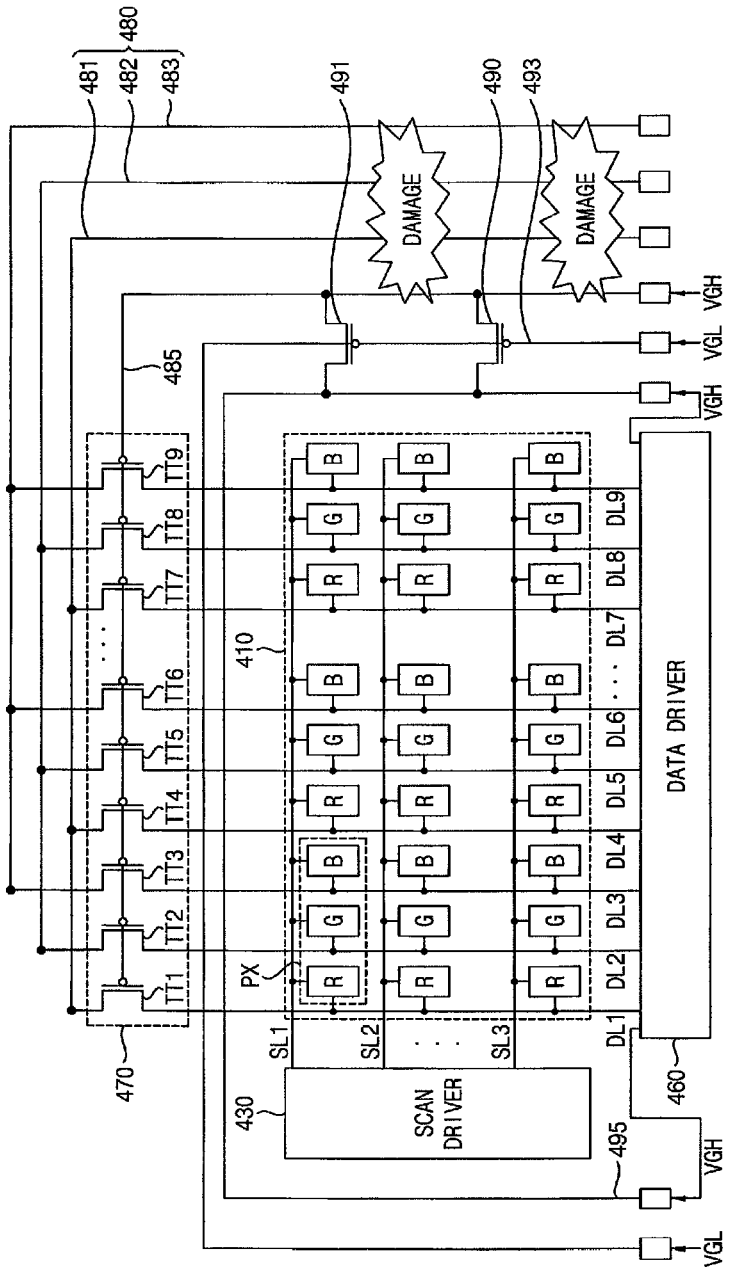
400
480
481
482
483
491
490
493
DAMAGE
DAMAGE
VGH
VGL
VGH
485
TT1
TT2
TT3
TT4
TT5
TT6
TT7
TT8
TT9
470
410
PX
R
G
B
SL1
SL2
SL3
DL1
DL2
DL3
DL4
DL5
DL6
DL7
DL8
DL9
430
SCAN DRIVER
DATA DRIVER
460
495
VGH
VGL

FIG. 5

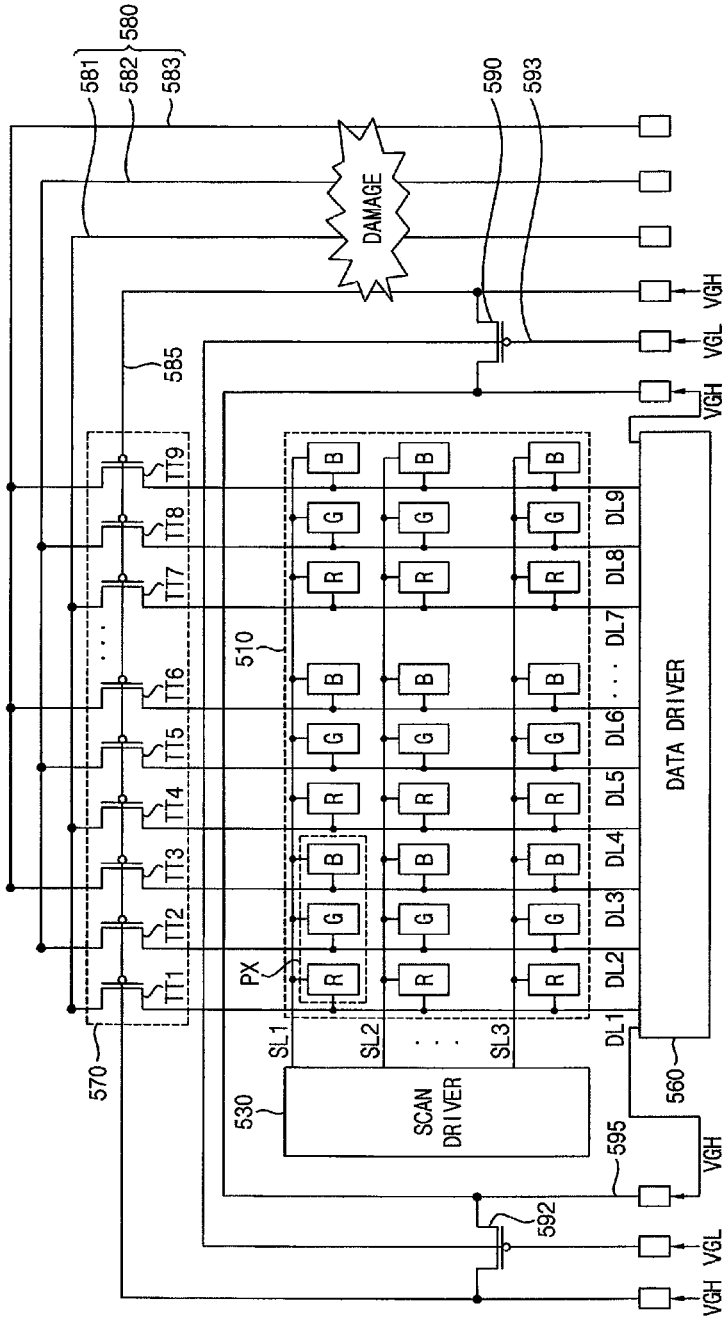
500
580
581
582
583
590
593
DAMAGE
585
VGH
VGL
VGH
TT1
TT2
TT3
TT4
TT5
TT6
TT7
TT8
TT9
570
510
PX
R
G
B
SL1
SL2
SL3
DL1
DL2
DL3
DL4
DL5
DL6
DL7
DL8
DL9
DATA DRIVER
560
530
SCAN DRIVER
595
592
VGH
VGL
VGH

FIG. 6

600

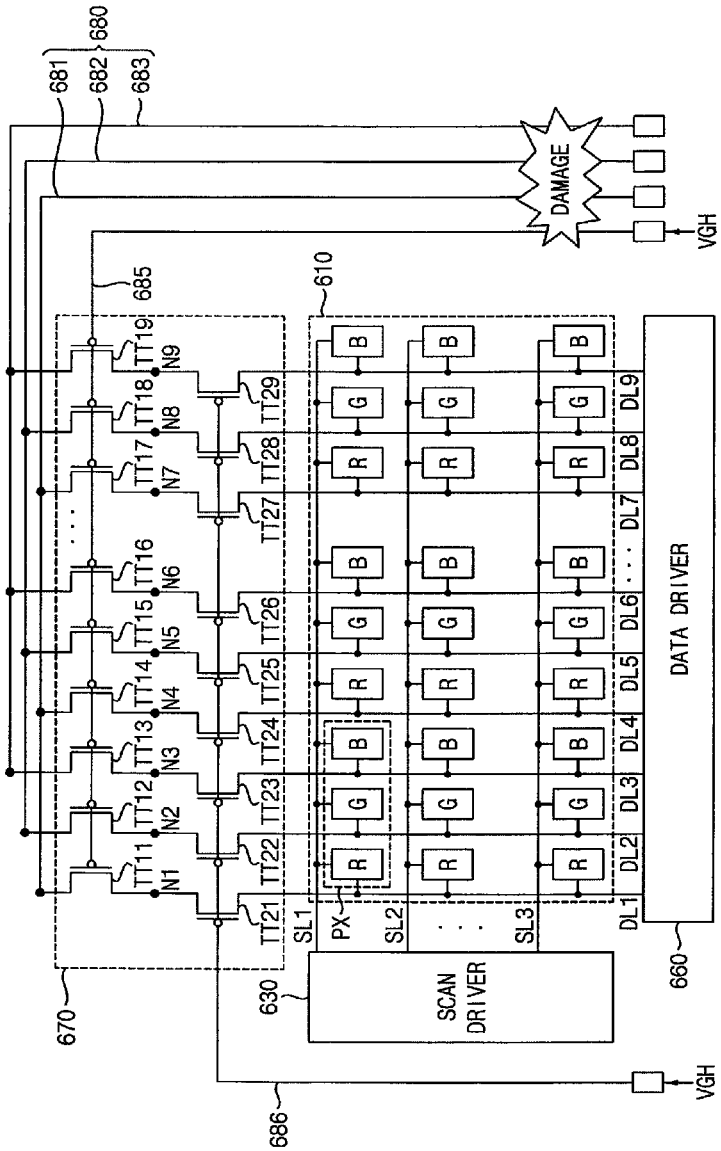
680
681
682
683
DAMAGE
VGH
685
610
TT11
TT12
TT13
TT14
TT15
TT16
TT17
TT18
TT19
N1
N2
N3
N4
N5
N6
N7
N8
N9
TT21
TT22
TT23
TT24
TT25
TT26
TT27
TT28
TT29
SL1
SL2
SL3
PX
R
G
B
DL1
DL2
DL3
DL4
DL5
DL6
DL7
DL8
DL9
DATA DRIVER
660
670
630
SCAN DRIVER
686
VGH

FIG. 7

700

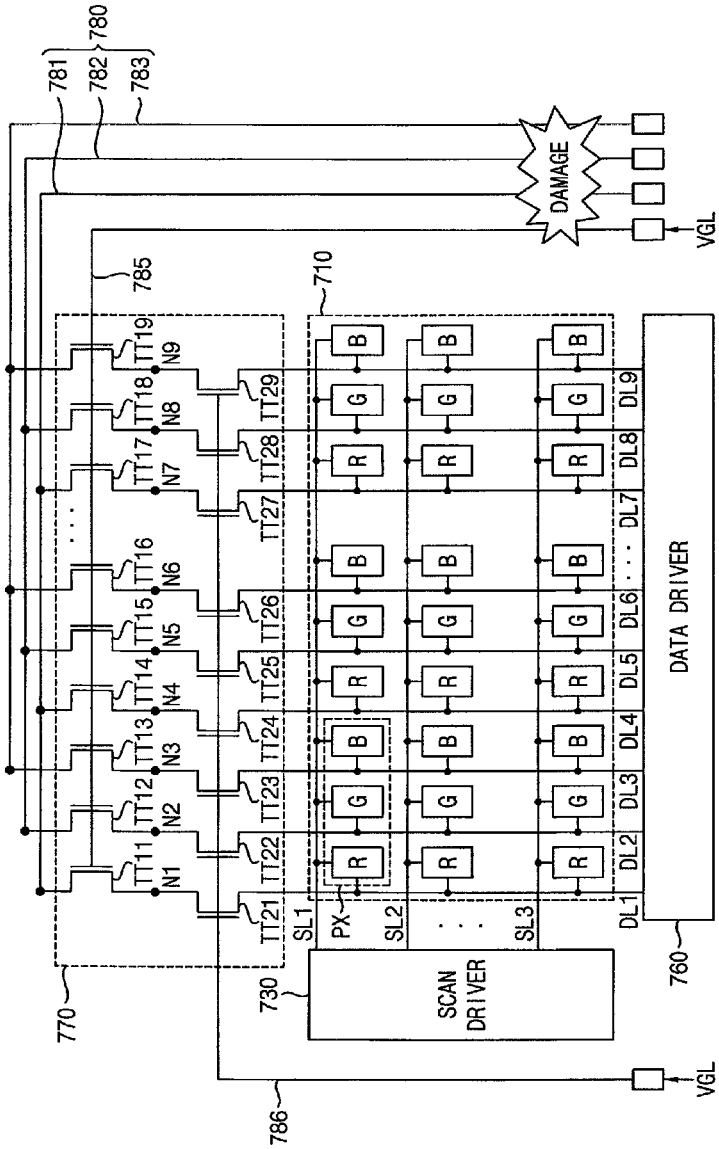
780
781
782
783
785
710
DAMAGE
VGL
TT11
TT12
TT13
TT14
TT15
TT16
TT17
TT18
TT19
N1
N2
N3
N4
N5
N6
N7
N8
N9
TT21
TT22
TT23
TT24
TT25
TT26
TT27
TT28
TT29
SL1
SL2
SL3
PX
R
G
B
DL1
DL2
DL3
DL4
DL5
DL6
DL7
DL8
DL9
DATA DRIVER
SCAN DRIVER
770
730
760
786
VGL

FIG. 8

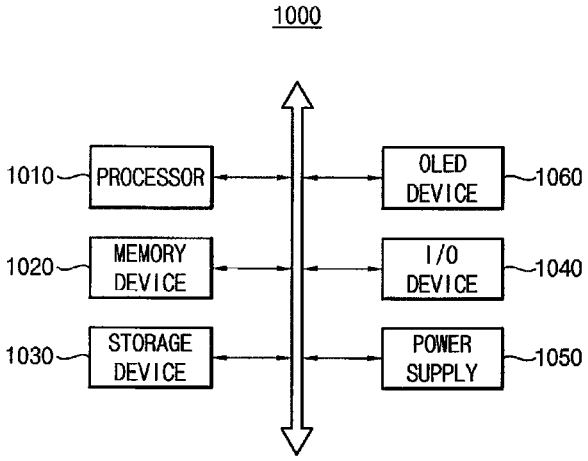
1000
1010
PROCESSOR
1020
MEMORY DEVICE
1030
STORAGE DEVICE
OLED DEVICE
1060
I/O DEVICE
1040
POWER SUPPLY
1050

ORGANIC LIGHT EMITTING DISPLAY DEVICE INCLUDING A REDUNDANT ELEMENT FOR A TEST GATE LINE

CROSS REFERENCE TO RELATED APPLICATION

This application claims priority under 35 U.S.C. §119 to Korean Patent Application No. 10-2012-0146369 filed on Dec. 14, 2012, the disclosure of which is hereby incorporated by reference herein in its entirety.

BACKGROUND

1. Field

Example embodiments of the inventive concept relate to display devices. More particularly, example embodiments of the inventive concept relate to organic light emitting display devices where a sheet unit test is performed.

2. Description of the Related Art

In order to effectively produce a large number of organic light emitting display devices, a production method of "sheet unit" has been developed in which panels of a plurality of organic light emitting display devices are formed on one mother substrate and then scribed into separate panels.

Tests for the separate panels of the organic light emitting display devices may be performed on each panel by a panel unit test apparatus. However, in this case, since the panels must be separately tested, the efficiency of the test deteriorates.

One way to address this deterioration is to perform the test in unit of sheet before the panels are separated from the mother substrate, and the test performed in unit of sheet may be referred to as a "sheet unit test." To accomplish this, a plurality of sheet unit lines for supplying power and/or signals for performing the sheet unit test to the plurality of panels are designed on the mother substrate. The sheet unit test may improve the efficiency of the test. However, if the plurality of sheet unit lines, or dedicated test lines for the sheet unit test are damaged, an organic light emitting display device may display an abnormal image even after the organic light emitting display device is separated from the mother substrate.

SUMMARY

Example embodiments provide an organic light emitting display device capable of preventing an abnormal image from being displayed even if test lines for a sheet unit test are damaged.

According to one aspect of example embodiments, there is provided an organic light emitting display device including a display unit including a plurality of pixels coupled to a plurality of scan lines and a plurality of data lines, a test data line to which a test data voltage is applied during a sheet unit test, a test gate line to which a first voltage is applied during the sheet unit test and to which a second voltage is applied during a normal operation of the organic light emitting display device, a plurality of test transistors configured to selectively couple the test data line to the plurality of data lines in response to the first voltage or the second voltage applied through the test gate line, an internal voltage line to which the second voltage is applied, and at least one voltage maintaining transistor configured to couple the internal voltage line to the test gate line during the normal operation.

In example embodiments, during the sheet unit test, the at least one voltage maintaining transistor may be turned off to decouple the internal voltage line from the test gate line, and, during the normal operation, the at least one voltage maintaining transistor may be turned on to couple the internal voltage line to the test gate line such that the test gate line maintains the second voltage even if the test gate line is damaged.

In example embodiments, the organic light emitting display device may further include a control voltage line coupled to the at least one voltage maintaining transistor. The second voltage may be applied to the control voltage line during the sheet unit test, and the first voltage may be applied to the control voltage line during the normal operation.

In example embodiments, the at least one voltage maintaining transistor may have a gate terminal coupled to the control voltage line, a source terminal coupled to the internal voltage line, and a drain terminal coupled to the test gate line.

In example embodiments, the at least one voltage maintaining transistor may include a plurality of voltage maintaining transistors, each voltage maintaining transistor having a gate terminal coupled to the control voltage line, a source terminal coupled to the internal voltage line, and a drain terminal coupled to the test gate line.

In example embodiments, the at least one voltage maintaining transistor may include a first voltage maintaining transistor having a gate terminal coupled to the control voltage line, a source terminal coupled to the internal voltage line, and a drain terminal coupled to the test gate line, the first voltage maintaining transistor being disposed in a first direction from the displaying unit, and a second voltage maintaining transistor having a gate terminal coupled to the control voltage line, a source terminal coupled to the internal voltage line, and a drain terminal coupled to the test gate line, the second voltage maintaining transistor being disposed in a second direction opposite to the first direction from the displaying unit.

In example embodiments, the plurality of test transistors may be configured to couple the test data line to the plurality of data lines in response to the first voltage applied through the test gate line during the sheet unit test, and may be configured to decouple the test data line from the plurality of data lines in response to the second voltage applied through the test gate line during the normal operation.

In example embodiments, the plurality of test transistors and the at least one voltage maintaining transistor may be implemented with PMOS transistors.

In example embodiments, the first voltage may be a low gate voltage, and the second voltage may be a high gate voltage.

In example embodiments, the plurality of test transistors and the at least one voltage maintaining transistor may be implemented with NMOS transistors.

In example embodiments, the first voltage may be a high gate voltage, and the second voltage may be a low gate voltage.

According to another aspect of example embodiments, there is provided an organic light emitting display device including a display unit including a plurality of pixels coupled to a plurality of scan lines and a plurality of data lines, a test data line to which a test data voltage is applied during a sheet unit test, a first test gate line to which a first voltage is applied during the sheet unit test and to which a second voltage is applied during a normal operation of the organic light emitting display device, a plurality of first test transistors configured to selectively couple the test data line to a plurality of nodes in response to the first voltage or the second voltage applied through the first test gate line, a second test gate line to which the first voltage is applied during the sheet unit test and to which the second voltage is applied during the normal

operation, and a plurality of second test transistors configured to selectively couple the plurality of nodes to the plurality of data lines in response to the first voltage or the second voltage applied through the second test gate line, each of the second test transistors being coupled in series with a corresponding one of the first test transistors.

In example embodiments, the first test gate line may be disposed in a first direction from the displaying unit, and the second test gate line may be disposed in a second direction opposite to the first direction from the displaying unit.

In example embodiments, the first test transistors may be configured to couple the test data line to the plurality of nodes in response to the first voltage applied through the first test gate line during the sheet unit test, and the second test transistors may be configured to couple the plurality of nodes to the plurality of data lines in response to the first voltage applied through the second test gate line during the sheet unit test.

In example embodiments, even if one of the first and second test gate lines is damaged, the first test transistors or the second test transistors coupled to the other one of the first and second test gate lines may decouple the test data line from the plurality of data lines in response to the second voltage applied through the other one of the first and second test gate lines during the normal operation.

In example embodiments, each of the first test transistors may be a gate terminal coupled to the first test gate line, a source terminal coupled to the test data line, and a drain terminal coupled to a corresponding one of the plurality of nodes, and wherein each of the second test transistors may have a gate terminal coupled to the second test gate line, a source terminal coupled to a corresponding one of the plurality of nodes, and a drain terminal coupled to a corresponding one of the plurality of data lines.

In example embodiments, the first test transistors and the second test transistors may be implemented with PMOS transistors.

In example embodiments, the first voltage may be a low gate voltage, and the second voltage is a high gate voltage.

In example embodiments, the first test transistors and the second test transistors may be implemented with NMOS transistors.

In example embodiments, the first voltage may be a high gate voltage, and the second voltage is a low gate voltage.

BRIEF DESCRIPTION OF THE DRAWINGS

Example embodiments can be understood in more detail from the following description taken in conjunction with the accompanying drawings, in which:

FIG. **1** is a diagram illustrating a mother substrate of an organic light emitting display device in accordance with example embodiments;

FIG. **2**A is a diagram illustrating an organic light emitting display device before being separated from a mother substrate in accordance with example embodiments;

FIG. **2**B is a diagram illustrating an organic light emitting display device after being separated from a mother substrate in accordance with example embodiments;

FIG. **3** is a diagram illustrating an organic light emitting display device in accordance with example embodiments;

FIG. **4** is a diagram illustrating an organic light emitting display device in accordance with example embodiments;

FIG. **5** is a diagram illustrating an organic light emitting display device in accordance with example embodiments;

FIG. **6** is a diagram illustrating an organic light emitting display device in accordance with example embodiments;

FIG. **7** is a diagram illustrating an organic light emitting display device in accordance with example embodiments; and

FIG. **8** is a block diagram illustrating an electronic system including an organic light emitting display device in accordance with example embodiments.

DETAILED DESCRIPTION

The example embodiments are described more fully hereinafter with reference to the accompanying drawings. The inventive concept may, however, be embodied in many different forms and should not be construed as limited to the example embodiments set forth herein. In the drawings, the sizes and relative sizes of layers and regions may be exaggerated for clarity.

It will be understood that when an element or layer is referred to as being "on," "connected to" or "coupled to" another element or layer, it can be directly on, connected or coupled to the other element or layer or intervening elements or layers may be present. In contrast, when an element is referred to as being "directly on," "directly connected to" or "directly coupled to" another element or layer, there are no intervening elements or layers present. Like or similar reference numerals refer to like or similar elements throughout. As used herein, the term "and/or" includes any and all combinations of one or more of the associated listed items.

It will be understood that, although the terms first, second, third etc. may be used herein to describe various elements, components, regions, layers, patterns and/or sections, these elements, components, regions, layers, patterns and/or sections should not be limited by these terms. These terms are only used to distinguish one element, component, region, layer pattern or section from another region, layer, pattern or section. Thus, a first element, component, region, layer or section discussed below could be termed a second element, component, region, layer or section without departing from the teachings of example embodiments.

Spatially relative terms, such as "beneath," "below," "lower," "above," "upper" and the like, may be used herein for ease of description to describe one element or feature's relationship to another element(s) or feature(s) as illustrated in the figures. It will be understood that the spatially relative terms are intended to encompass different orientations of the device in use or operation in addition to the orientation depicted in the figures. For example, if the device in the figures is turned over, elements described as "below" or "beneath" other elements or features would then be oriented "above" the other elements or features. Thus, the exemplary term "below" can encompass both an orientation of above and below. The device may be otherwise oriented (rotated 90 degrees or at other orientations) and the spatially relative descriptors used herein interpreted accordingly.

The terminology used herein is for the purpose of describing particular example embodiments only and is not intended to be limiting of the invention. As used herein, the singular forms "a," "an" and "the" are intended to include the plural forms as well, unless the context clearly indicates otherwise. It will be further understood that the terms "comprises" and/or "comprising," when used in this specification, specify the presence of stated features, integers, steps, operations, elements, and/or components, but do not preclude the presence or addition of one or more other features, integers, steps, operations, elements, components, and/or groups thereof.

Example embodiments are described herein with reference to cross sectional illustrations that are schematic illustrations of illustratively idealized example embodiments (and inter-

mediate structures) of the inventive concept. As such, variations from the shapes of the illustrations as a result, for example, of manufacturing techniques and/or tolerances, are to be expected. Thus, example embodiments should not be construed as limited to the particular shapes of regions illustrated herein but are to include deviations in shapes that result, for example, from manufacturing. The regions illustrated in the figures are schematic in nature and their shapes are not intended to illustrate the actual shape of a region of a device and are not intended to limit the scope of the inventive concept.

Unless otherwise defined, all terms (including technical and scientific terms) used herein have the same meaning as commonly understood by one of ordinary skill in the art to which this inventive concept belongs. It will be further understood that terms, such as those defined in commonly used dictionaries, should be interpreted as having a meaning that is consistent with their meaning in the context of the relevant art and will not be interpreted in an idealized or overly formal sense unless expressly so defined herein.

FIG. **1** is a diagram illustrating a mother substrate of an organic light emitting display device in accordance with example embodiments. Referring to FIG. **1**, a mother substrate **100** includes a plurality of organic light emitting display devices **200** arranged in a matrix, and sheet unit lines **121**, **122**, **131**, and **132** located at outside regions of the organic light emitting display devices **200**.

Each organic light emitting display device **200** may include a display unit **210**, a scan driver **230**, an integrated circuit (IC) mounting region **250**, and a test unit **270**. The display unit **210** includes a plurality of pixels coupled to a plurality of scan lines and a plurality of data lines. Each pixel included in the display unit **210** may include red, green, and blue sub-pixels. In some example embodiments, the red, green, and blue sub-pixels may include red, green, and blue organic light emitting diodes that emit red light, green light, and blue right, respectively. In other example embodiments, the red, green, and blue sub-pixels may include white organic light emitting diodes that emit white light, and may further include red, green, and blue color filters, respectively. In still other example embodiments, each pixel included in the displaying unit **210** may have red, green, blue, and white sub-pixels. The red, green, and blue sub-pixels may include the white organic light emitting diodes, and may further include red, green, and blue color filters, respectively. The white sub-pixel may include the white organic light emitting diode without the color filter.

The scan driver **230** is coupled to the plurality of scan lines. The scan driver **230** may generate a scan signal based on a scan driving voltage and a scan control signal, and may sequentially apply the scan signal to the plurality of scan lines. The IC mounting region **250** may be coupled to first ends of the plurality of data lines and the test unit **270** may be coupled to second ends of the plurality of data lines. After the plurality of organic light emitting display devices **200** are scribed, separated, or otherwise divided into separate panels, a driving IC including a data driver and/or a timing controller may be mounted on the IC mounting region **250**. During a sheet unit test, the test unit **270** may apply a test data voltage to the plurality of data lines in response to a test control voltage.

The sheet unit test may be performed simultaneously on the plurality of organic light emitting display devices **200** before the plurality of organic light emitting display devices **200** are separated from the mother substrate **100**. The sheet unit test may include a lighting test. In some example embodiments, the sheet unit test may further include a leakage current test, an aging process test, etc.

The sheet unit test may be performed by applying predetermined signals to the sheet unit lines **121**, **122**, **131**, and **132** located at outside regions of the organic light emitting display devices **200**. Each sheet unit line **121**, **122**, **131**, and **132** may extend in a row direction to simultaneously transfer the signals to the organic light emitting display devices **200** located at a corresponding row or may extend in a column direction to simultaneously transfer the signals to the organic light emitting display devices **200** located at a corresponding column.

For example, to perform the sheet unit test, the test control voltage and the test data voltage may be applied to at least one first sheet unit line **132** through at least one test pad TP, and the test unit **270** may receive the test control voltage and the test data voltage through the first sheet unit line **132**. The test unit **270** may apply the test data voltage to the plurality of data lines in response to the test control voltage. Further, the scan driving voltage and the scan control signal may be applied to at least one second sheet unit line **121** through at least one test pad TP, and the scan driver **230** may receive the scan driving voltage and the scan control signal through the second sheet unit line **121**. For example, the scan driving voltage may include a high scan driving voltage (or a high gate voltage) and a low scan driving voltage (or a low gate voltage), and the scan control signal may include a start pulse, a scan clock signal and an output enable signal. The scan driver **230** may sequentially apply the scan signal to the plurality of scan lines based on the scan driving voltage and the scan control signal. Thus, the test data voltage from the test unit **270** may be sequentially applied to the plurality of pixels included in the display unit **210** on a row basis. While the sheet unit test is performed, a first pixel power supply voltage (e.g., a high pixel power supply voltage (ELVDD)) may be applied to a third sheet unit line **122** through a test pad TP, a second pixel power supply voltage (e.g., a low pixel power supply voltage (ELVSS)) may be applied to a fourth sheet unit line **131** through a test pad TP, and the display unit **210** may receive the first and second pixel power supply voltages through the third and fourth sheet unit lines **122** and **131**.

As described above, since the sheet unit test is performed simultaneously on the plurality of organic light emitting display devices **200**, the time and cost of the test may be reduced, thereby improving the efficiency of the test.

After the sheet unit test is completed, the plurality of organic light emitting display devices **200** may be scribed, separated, or otherwise divided from the mother substrate **100** into separate organic light emitting display devices **200** along scribing lines **101**. Electrical connection points between the sheet unit lines **121**, **122**, **131**, and **132** and components **210**, **230** and **270** of each organic light emitting display device **200** may be located outside of the scribing lines **101** of the organic light emitting display device **200**. Thus, after the plurality of organic light emitting display devices **200** are scribed from the mother substrate **100**, the sheet unit lines **121**, **122**, **131**, and **132** may be electrically decoupled from the components (e.g., the display unit **210**, the scan driver **230**, the test unit **270**, etc.) of each organic light emitting display device **200**, and may not affect a normal operation of the organic light emitting display device **200**.

FIG. **2**A is a diagram illustrating an organic light emitting display device before being separated from a mother substrate in accordance with example embodiments. FIG. **2**B is a diagram illustrating an organic light emitting display device after being separated from a mother substrate in accordance with example embodiments.

Referring to FIGS. **2**A and **2**B, an organic light emitting display device **200***a* formed on a mother substrate **100** of FIG. **1** may include a display unit **210**, a scan driver **230**, an IC mounting region **250**, a test unit **270**, a test data line **280**, a test gate line **285**, a voltage maintaining transistor **290**, a control voltage line **293**, and an internal voltage line **295**. After the organic light emitting display device **200***a* is separated from the mother substrate **100** of FIG. **1**, an organic light emitting display device **200***b* may further include a driving IC mounted on the IC mounting region **250**. In some example embodiments, the driving IC may be mounted on the IC mounting region **250** in a chip-on-glass (COG) manner, and may include a data driver **260** and/or a timing controller.

The display unit **210** may include a plurality of pixels PX coupled to a plurality of scan lines SL**1**, SL**2**, and SL**3** and a plurality of data lines DL**1**, DL**2**, DL**3**, DL**4**, DL**5**, DL**6**, DL**7**, DL**8**, and DL**9**. Each pixel PX may include a red sub-pixel R, a green sub-pixel G, and a blue sub-pixel B. In some example embodiments, each pixel PX may further include a white sub-pixel.

The scan driver **230** may be coupled to the plurality of scan lines SL**1**, SL**2**, and SL**3**. The scan driver **230** may generate a scan signal based on a scan driving voltage and a scan control signal, and may sequentially apply the scan signal to the plurality of scan lines SL**1**, SL**2**, and SL**3**. In some example embodiments, the scan driver **230** may receive the scan driving voltage and the scan control signal through a sheet unit line **121** illustrated in FIG. **1** during a sheet unit test, and may receive the scan driving voltage and the scan control signal from the data driver **260** during a normal operation of the organic light emitting display device **200***b*. The scan driving voltage may include a high gate voltage VGH, and the scan driver **230** may receive the high gate voltage VGH through the internal voltage line **295** formed inside the organic light emitting display device **200***a* and **200***b* from the sheet unit line **121** of FIG. **1** during the sheet unit test or from the data driver **260** during the normal operation, respectively. The internal voltage line **295** formed outside the display unit **210** may receive the high gate voltage VGH during the sheet unit test and during the normal operation, and may transfer the high gate voltage VGH to the scan driver **230** and/or an emission driver. Although FIGS. **2**A and **2**B illustrate an example where the internal voltage line **295** may receive the high gate voltage VGH at both of the bottom left edge and the bottom right of the organic light emitting display device **200***a* and **200***b*, in some example embodiments, the internal voltage line **295** may receive the high gate voltage VGH at either the bottom left edge or the bottom right of the organic light emitting display device **200***a* and **200***b*. In some example embodiments, the organic light emitting display device **200***a* and **200***b* may further include another internal voltage line for receiving a low gate voltage VGL.

The IC mounting region **250** may be coupled to one ends of the plurality of data lines DL**1**, DL**2**, DL**3**, DL**4**, DL**5**, DL**6**, DL**7**, DL**8**, and DL**9**, and the test unit **270** may be coupled to the other ends of the plurality of data lines DL**1**, DL**2**, DL**3**, DL**4**, DL**5**, DL**6**, DL**7**, DL**8**, and DL**9**. During the sheet unit test, as illustrated in FIG. **2**A, a test data voltage TD_R, TD_G, and TD_B may be applied to the plurality of data lines DL**1**, DL**2**, DL**3**, DL**4**, DL**5**, DL**6**, DL**7**, DL**8**, and DL**9** through the test data line **280** and the test unit **270**. After the organic light emitting display device **200***a* is separated from the mother substrate **100** of FIG. **1**, the data driver **260** may be mounted on the IC mounting region **250**. During the normal operation of the organic light emitting display device **200***b* after the data driver **260** is mounted, the data driver **260** may apply a data voltage corresponding to an image to be displayed by the display unit **210** to the plurality of data lines DL**1**, DL**2**, DL**3**, DL**4**, DL**5**, DL**6**, DL**7**, DL**8**, and DL**9**. In some example embodiments, the organic light emitting display device **200***a* and **200***b* may further include a switching unit between the data driver **260** and the display unit **210**. The switching unit may sequentially apply the data voltage output from the data driver **260** in order of the red sub-pixels R, the green sub-pixels G, and the blue sub-pixels B to the plurality of data lines DL**1**, DL**2**, DL**3**, DL**4**, DL**5**, DL**6**, DL**7**, DL**8**, and DL**9**.

The test unit **270** may include a plurality of test transistors TT**1**, TT**2**, TT**3**, TT**4**, TT**5**, TT**6**, TT**7**, TT**8**, and TT**9** between the test data line **280** and the plurality of data lines DL**1**, DL**2**, DL**3**, DL**4**, DL**5**, DL**6**, DL**7**, DL**8**, and DL**9**. Each test transistor TT**1**, TT**2**, TT**3**, TT**4**, TT**5**, TT**6**, TT**7**, TT**8**, and TT**9** may include a gate terminal coupled to the test gate line **285**, a source terminal coupled to the test data line **280**, and a drain terminal coupled to a corresponding one of the plurality of data lines DL**1**, DL**2**, DL**3**, DL**4**, DL**5**, DL**6**, DL**7**, DL**8**, and DL**9**. The test data line **280** may include a first test data line **281** to which a red test data voltage TD_R is applied, a second test data line **282** to which a green test data voltage TD_G is applied, and a third test data line **283** to which a blue test data voltage TD_B is applied. In a case where each pixel PX of the display unit **210** includes the white sub-pixel, the test data line **280** may further include a fourth test data line to which a white test data voltage is applied.

The voltage maintaining transistor **290** may include a gate terminal coupled to the control voltage line **293**, a source terminal coupled to the internal voltage line **295**, and a drain terminal coupled to the test gate line **285**.

The sheet unit test may be performed simultaneously on a plurality of organic light emitting display devices **200***a* before the plurality of organic light emitting display devices **200***a* are scribed or separated from the mother substrate **100** of FIG. **1**. For example, during the sheet unit test, the red test data voltage TD_R may be applied to the first test data line **281**, the green test data voltage TD_G may be applied to the second test data line **282**, the blue test data voltage TDB may be applied to the third test data line **283**, and a first voltage (e.g., the low gate voltage VGL) may be applied to the test gate line **285**. Thus, the plurality of test transistors TT**1**, TT**2**, TT**3**, TT**4**, TT**5**, TT**6**, TT**7**, TT**8**, and TT**9** may be turned on in response to the low gate voltage VGL applied through the test gate line **285**, and the red, green and blue test data voltages TD_R, TD_G, and TD_B from the first through third test data lines **281**, **282**, and **283** may be applied to the plurality of data lines DL**1**, DL**2**, DL**3**, DL**4**, DL**5**, DL**6**, DL**7**, DL**8**, and DL**9**.

During the sheet unit test, the scan driver **230** may sequentially apply the scan signal to the plurality of scan lines SL**1**, SL**2**, and SL**3** by receiving the scan driving voltage and the scan control signal through the sheet unit line **121** of FIG. **1**. Accordingly, the red, green, and blue test data voltages TD_R, TD_G, and TDB may be sequentially applied to the plurality of pixels PX included in the display unit **210** on a row basis and, thus, the sheet unit test, e.g., a lighting test, for the plurality of pixels PX may be performed. In some example embodiments, the red, green, and blue test data voltages TD_R, TD_G, and TD_B may sequentially have a logic high level to sequentially perform the lighting test for the red, green, and blue sub-pixels R, G, and B. In other example embodiments, the red, green, and blue test data voltages TD_R, TD_G, and TD_B may simultaneously have the logic high level to simultaneously perform the lighting test for the red, green and blue sub-pixels R, G, and B.

While the sheet unit test is performed, a second voltage (e.g., the high gate voltage VGH) may be applied to the

control voltage line **293**, and the voltage maintaining transistor **290** may be turned off in response to the high gate voltage VGH applied through the control voltage line **293**. Accordingly, during the sheet unit test, the voltage maintaining transistor **290** may electrically decouple the internal voltage line **295** from the test gate line **285**.

After the sheet unit test is completed, the organic light emitting display device **200***a* may be separated from the mother substrate **100** of FIG. **1**, the data driver **260** may be mounted on the IC mounting region **250**, and the organic light emitting display device **200***b* separated from the mother substrate **100** may perform the normal operation that displays an image based on image data received from an external device. During the normal operation, the data driver **260** may apply the data voltage corresponding to the image data to the plurality of data lines DL**1**, DL**2**, DL**3**, DL**4**, DL**5**, DL**6**, DL**7**, DL**8**, and DL**9**, and the scan driver **230** may sequentially apply the scan signal to the plurality of scan lines SL**1**, SL**2**, and SL**3**. Accordingly, the display unit **210** may display an image corresponding to the image data based on the data voltage and the scan signal.

During the normal operation of the organic light emitting display device **200***b*, the second voltage (e.g., the high gate voltage VGH) may be applied to the test gate line **285**, and the plurality of test transistors TT**1**, TT**2**, TT**3**, TT**4**, TT**5**, TT**6**, TT**7**, TT**8**, and TT**9** may be turned off in response to the high gate voltage VGH applied through the test gate line **285**. Accordingly, the plurality of test transistors TT**1**, TT**2**, TT**3**, TT**4**, TT**5**, TT**6**, TT**7**, TT**8**, and TT**9** may electrically decouple the first through third test data lines **281**, **282**, and **283** from the plurality of data lines DL**1**, DL**2**, DL**3**, DL**4**, DL**5**, DL**6**, DL**7**, DL**8**, and DL**9**. However, if the test gate line **285** is damaged, e.g., by a crack, a scratch, an electrostatic discharge (ESD), or the like, the test gate line **285** may be cut off, and, thus, the gate high voltage VGH for turning off the plurality of test transistors TT**1**, TT**2**, TT**3**, TT**4**, TT**5**, TT**6**, TT**7**, TT**8**, and TT**9** may not be applied to gate terminals of the plurality of test transistors TT**1**, TT**2**, TT**3**, TT**4**, TT**5**, TT**6**, TT**7**, TT**8**, and TT**9**. In particular, a pad region of the test gate line **285** to which the high gate voltage VGH is applied may be vulnerable to damage.

In a conventional organic light emitting display device, once the test gate line **285** is damaged, the plurality of test transistors TT**1**, TT**2**, TT**3**, TT**4**, TT**5**, TT**6**, TT**7**, TT**8**, and TT**9** may not be sufficiently turned off, and thus the plurality of data lines DL**1**, DL**2**, DL**3**, DL**4**, DL**5**, DL**6**, DL**7**, DL**8**, and DL**9** may be coupled to each other through the first through third test data lines **281**, **282** and **283**. Accordingly, the data voltage applied from the data driver **260** to the respective data lines DL**1**, DL**2**, DL**3**, DL**4**, DL**5**, DL**6**, DL**7**, DL**8**, and DL**9** may be shared by the plurality of data lines DL**1**, DL**2**, DL**3**, DL**4**, DL**5**, DL**6**, DL**7**, DL**8**, and DL**9**. For example, the data voltage applied to the respective data lines DL**1**, DL**4**, and DL**7** corresponding to the red sub-pixels R may be shared by the data lines DL**1**, DL**4**, and DL**7** through the first test data line **281**, the data voltage applied to the respective data lines DL**2**, DL**5**, and DL**8** corresponding to the green sub-pixels G may be shared by the data lines DL**2**, DL**5**, and DL**8** through the second test data line **282**, and the data voltage applied to the respective data lines DL**3**, DL**6**, and DL**9** corresponding to the blue sub-pixels B may be shared by the data lines DL**3**, DL**6**, and DL**9** through the third test data line **283**. If the data voltage is shared by the plurality of data lines DL**1**, DL**2**, DL**3**, DL**4**, DL**5**, DL**6**, DL**7**, DL**8**, and DL**9**, the data voltage applied to each sub-pixel R, G, and B may not have a desired voltage level, and the display unit **210** may display an abnormal image. Accordingly, a conventional organic light emitting display device where the test gate line **285** is damaged should be discarded as a defective product, reducing yield.

However, in the organic light emitting display device **200***b* according to example embodiments, even if the test gate line **285** is damaged, the voltage maintaining transistor **290** may couple the internal voltage line **295** to the test gate line **285** to allow the test gate line **285** to maintain the second voltage (e.g., the high gate voltage VGH) during the normal operation. For example, during the normal operation, the voltage maintaining transistor **290** may be turned on in response to the low gate voltage VGL applied through the control voltage line **293**, and may couple the internal voltage line **295** for providing components (e.g., the scan driver **230** or an emission driver) of the organic light emitting display device **200***b* with the high gate voltage VGH to the test gate line **285**. In some example embodiments, at least one pad through which the low gate voltage VGL is applied to the control voltage line **293** may be formed. For example, the pads of the control voltage line **293** may be formed at both ends of the control voltage line **293** respectively located at both of the bottom left edge and the bottom right of the organic light emitting display device **200***b*. In this case, even if not only the test gate line **285** but also a pad region of one end of the control voltage line **293** is damaged, the control voltage line **293** may receive the low gate voltage VGL at the pad of the other end of the control voltage line **293**. Thus, the voltage maintaining transistor **290** may be turned on to apply the high gate voltage VGH to the test gate line **285**.

As described above, even if the high gate voltage VGH is not applied to the test gate line **285** through the pad since a pad region of the test gate line **285** is damaged, the high gate voltage VGH may be applied to the test gate line **285** through the voltage maintaining transistor **290** from the internal voltage line **295**. That is, in the organic light emitting display device **200***b* according to example embodiments, the high gate voltage VGH may be applied to the test gate line **285** even if the test gate line **285** is damaged, and thus the plurality of test transistors TT**1**, TT**2**, TT**3**, TT**4**, TT**5**, TT**6**, TT**7**, TT**8**, and TT**9** may be turned off to electrically decouple the first through third test data lines **281**, **282**, and **283** from the plurality of data lines DL**1**, DL**2**, DL**3**, DL**4**, DL**5**, DL**6**, DL**7**, DL**8**, and DL**9**. Accordingly, the organic light emitting display device **200***b* according to example embodiments may accurately display a desired image even if the test gate line **285** is damaged.

FIG. **3** is a diagram illustrating an organic light emitting display device in accordance with example embodiments. Referring to FIG. **3**, an organic light emitting display device **300** may include a display unit **310**, a scan driver **330**, a data driver **360**, a test unit **370**, a test data line **380**, a test gate line **385**, a voltage maintaining transistor **390**, a control voltage line **393**, and an internal voltage line **395**. The organic light emitting display device **300** of FIG. **3** may have a similar configuration to an organic light emitting display device **200***b* of FIG. **2**B, except that transistors included in the organic light emitting display device **300** of FIG. **3**, for example a plurality of test transistors TT**1**, TT**2**, TT**3**, TT**4**, TT**5**, TT**6**, TT**7**, TT**8**, and TT**9** and the voltage maintaining transistor **390** are implemented with NMOS transistor, rather than the PMOS transistors illustrated in FIG. **2**B.

The display unit **310** may include a plurality of pixels PX coupled to a plurality of scan lines SL**1**, SL**2**, and SL**3** and a plurality of data lines DL**1**, DL**2**, DL**3**, DL**4**, DL**5**, DL**6**, DL**7**, DL**8**, and DL**9**.

The test data line **380** may receive a test data voltage during a sheet unit test, and the test data line **380** may be floated or

may receive a predetermined voltage during a normal operation. In some example embodiments, the test data line **380** may include first, second, and third test data lines **381**, **382**, and **383** respectively corresponding to red, green, and blue pixels. A first voltage (e.g., a high gate voltage VGH) may be applied to the test gate line **385** during the sheet unit test and a second voltage (e.g., a low gate voltage VGL) may be applied to the test gate line **385** during the normal operation.

The test unit **370** may include the plurality of test transistors TT**1**, TT**2**, TT**3**, TT**4**, TT**5**, TT**6**, TT**7**, TT**8**, and TT**9** between the test data line **380** and the plurality of data lines DL**1**, DL**2**, DL**3**, DL**4**, DL**5**, DL**6**, DL**7**, DL**8**, and DL**9**. The plurality of test transistors TT**1**, TT**2**, TT**3**, TT**4**, TT**5**, TT**6**, TT**7**, TT**8**, and TT**9** may selectively couple the first through third test data lines **381**, **382**, and **383** to the plurality of data lines DL**1**, DL**2**, DL**3**, DL**4**, DL**5**, DL**6**, DL**7**, DL**8**, and DL**9** in response to the first voltage or the second voltage applied through the test gate line **385**. For example, the plurality of test transistors TT**1**, TT**2**, TT**3**, TT**4**, TT**5**, TT**6**, TT**7**, TT**8**, and TT**9** may couple the first through third test data lines **381**, **382**, and **383** to the plurality of data lines DL**1**, DL**2**, DL**3**, DL**4**, DL**5**, DL**6**, DL**7**, DL**8**, and DL**9** in response to the high gate voltage VGH applied through test gate line **385** during the sheet unit test, and may electrically decouple the first through third test data lines **381**, **382**, and **383** from the plurality of data lines DL**1**, DL**2**, DL**3**, DL**4**, DL**5**, DL**6**, DL**7**, DL**8**, and DL**9** in response to the low gate voltage VGL applied through test gate line **385** during the normal operation.

The internal voltage line **395** may receive the low gate voltage VGL from a sheet unit line **121** of FIG. **1** during the sheet unit test, and may receive the low gate voltage VGL from the data driver **360** during the normal operation. The low gate voltage VGL applied to the internal voltage line **395** may be provided to the scan driver **360** and/or an emission driver.

The voltage maintaining transistor **390** may couple the internal voltage line **395** to the test gate line **385**, so that the test gate line **385** maintains the low gate voltage VGL during the normal operation even if the test gate line **385** is damaged. For example, the voltage maintaining transistor **390** may be turned off in response to the low gate voltage VGL applied through the control voltage line **393** to electrically decouple the internal voltage line **395** from the test gate line **385** during the sheet unit test, and may be turned on in response to the high gate voltage VGH applied through the control voltage line **393** to couple the internal voltage line **395** to the test gate line **385** during the normal operation.

During the normal operation of the organic light emitting display device **300**, after the organic light emitting display device **300** is separated from a mother substrate and the data driver **360** is mounted, the low gate voltage VGL may be applied to the test gate line **385** through the internal voltage line **395** and the voltage maintaining transistor **390** even if the test gate line **385** is damaged. Thus, the plurality of test transistors TT**1**, TT**2**, TT**3**, TT**4**, TT**5**, TT**6**, TT**7**, TT**8**, and TT**9** may be turned off in response to the low gate voltage VGL applied through the test gate line **385** to electrically decouple the first through third test data lines **381**, **382**, and **383** from the plurality of data lines DL**1**, DL**2**, DL**3**, DL**4**, DL**5**, DL**6**, DL**7**, DL**8**, and DL**9**. Accordingly, the organic light emitting display device **300** according to example embodiments may accurately display a desired image even if the test gate line **385** is damaged.

FIG. **4** is a diagram illustrating an organic light emitting display device in accordance with example embodiments. Referring to FIG. **4**, an organic light emitting display device **400** may include a display unit **410**, a scan driver **430**, a data driver **460**, a test unit **470**, a test data line **480**, a test gate line **485**, a plurality of voltage maintaining transistors **490** and **491**, a control voltage line **493** and an internal voltage line **495**. Compared with an organic light emitting display device **200***b* of FIG. **2**, the organic light emitting display device **400** of FIG. **4** may further include at least one additional voltage maintaining transistor **491**.

Each of the plurality of voltage maintaining transistors **490** and **491** may include a gate terminal coupled to the control voltage line **493**, a source terminal coupled to the internal voltage line **495**, and a drain terminal coupled to the test gate line **485**. Since the organic light emitting display device **400** includes the plurality of voltage maintaining transistors **490** and **491**, a high gate voltage VGH may be stably applied to the test gate line **485** during a normal operation of the organic light emitting display device **400**. For example, even if not only a pad region of the test gate line **485** but also a region of the test gate line **485** above the first voltage maintaining transistor **490** is damaged, a second voltage maintaining transistor **491** may couple the internal voltage line **495** to the test gate line **485**, and thus the high gate voltage VGH may be applied to the test gate line **485**.

As described above, during the normal operation of the organic light emitting display device **400**, the plurality of voltage maintaining transistors **490** and **491** may couple the internal voltage line **495** to the test gate line **485**, and thus the high gate voltage VGH may be applied to the test gate line **485**. Thus, the plurality of test transistors TT**1**, TT**2**, TT**3**, TT**4**, TT**5**, TT**6**, TT**7**, TT**8**, and TT**9** may be turned off in response to the high gate voltage VGH applied through the test gate line **485** to electrically decouple first through third test data lines **481**, **482**, and **483** from a plurality of data lines DL**1**, DL**2**, DL**3**, DL**4**, DL**5**, DL**6**, DL**7**, DL**8**, and DL**9**. Accordingly, the organic light emitting display device **400** according to example embodiments may accurately display a desired image even if the test gate line **485** is damaged.

FIG. **5** is a diagram illustrating an organic light emitting display device in accordance with example embodiments. Referring to FIG. **5**, an organic light emitting display device **500** may include a display unit **510**, a scan driver **530**, a data driver **560**, a test unit **570**, a test data line **580**, a test gate line **585**, a plurality of voltage maintaining transistors **590** and **592**, a control voltage line **593**, and an internal voltage line **595**. Compared with an organic light emitting display device **200***b* of FIG. **2**B, the organic light emitting display device **500** of FIG. **5** may further include not only a first voltage maintaining transistor **590** disposed in a first direction from the display unit **510** but also a second voltage maintaining transistor **592** disposed in a second direction, opposite to the first direction, from the display unit **510**, e.g., on opposite sides of the display unit **510**.

Each of the plurality of voltage maintaining transistors **590** and **592** may include a gate terminal coupled to the control voltage line **593**, a source terminal coupled to the internal voltage line **595**, and a drain terminal coupled to the test gate line **585**. The first voltage maintaining transistor **590** may be disposed in the first direction (e.g., a right direction) from the display unit **510**, and the second voltage maintaining transistor **592** may be disposed in the second direction (e.g., a left direction) from the display unit **510**. Since the organic light emitting display device **500** includes the first and second voltage maintaining transistors **590** and **592** respectively disposed in the right direction and the left direction from the display unit **510**, a high gate voltage VGH may be stably applied to the test gate line **585** during a normal operation of the organic light emitting display device **500**. For example, in a case where the test gate line **485** is damaged at the right of

the display unit **510**, the second voltage maintaining transistor **592** disposed in the left direction from the display unit **510** may couple the internal voltage line **595** to the test gate line **585** to apply the high gate voltage VGH to the test gate line **585**. Further, in a case where the test gate line **485** is damaged at the left of the display unit **510**, the first voltage maintaining transistor **590** disposed in the right direction from the display unit **510** may couple the internal voltage line **595** to the test gate line **585** to apply the high gate voltage VGH to the test gate line **585**.

As described above, during the normal operation of the organic light emitting display device **500**, the plurality of voltage maintaining transistors **590** and **592** at the left and right of the display unit **510** may couple the internal voltage line **595** to the test gate line **585**, and thus the high gate voltage VGH may be applied to the test gate line **585** even if the test gate line **585** is damaged. Thus, the plurality of test transistors TT**1**, TT**2**, TT**3**, TT**4**, TT**5**, TT**6**, TT**7**, TT**8**, and TT**9** may be turned off in response to the high gate voltage VGH applied through the test gate line **585** to electrically decouple first through third test data lines **581**, **582**, and **583** from a plurality of data lines DL**1**, DL**2**, DL**3**, DL**4**, DL**5**, DL**6**, DL**7**, DL**8**, and DL**9**. Accordingly, the organic light emitting display device **500** according to example embodiments may accurately display a desired image even if the test gate line **585** is damaged.

FIG. **6** is a diagram illustrating an organic light emitting display device in accordance with example embodiments. Referring to FIG. **6**, an organic light emitting display device **600** may include a display unit **610**, a scan driver **630**, a data driver **660**, a test unit **670**, a test data line **680**, a first test gate line **685**, and a second test gate line **686**.

The display unit **610** may include a plurality of pixels PX coupled to a plurality of scan lines SL**1**, SL**2** and SL**3** and a plurality of data lines DL**1**, DL**2**, DL**3**, DL**4**, DL**5**, DL**6**, DL**7**, DL**8** and DL**9**.

The test unit **670** may include a plurality of first test transistors TT**11**, TT**12**, TT**13**, TT**14**, TT**15**, TT**16**, TT**17**, TT**18**, and TT**19** that selectively couple the test data line **680** to a plurality of nodes N**1**, N**2**, N**3**, N**4**, N**5**, N**6**, N**7**, N**8**, and N**9** in response to a voltage applied through the first test gate line **685**, and a plurality of second test transistors TT**21**, TT**22**, TT**23**, TT**24**, TT**25**, TT**26**, TT**27**, TT**28**, and TT**29** that selectively couple the plurality of nodes N**1**, N**2**, N**3**, N**4**, N**5**, N**6**, N**7**, N**8**, and N**9** to the plurality of data lines DL**1**, DL**2**, DL**3**, DL**4**, DL**5**, DL**6**, DL**7**, DL**8**, and DL**9** in response to a voltage applied through the second test gate line **686**. Each of the first test transistors TT**11**, TT**12**, TT**13**, TT**14**, TT**15**, TT**16**, TT**17**, TT**18**, and TT**19** may be coupled in series with a corresponding one of the second test transistors TT**21**, TT**22**, TT**23**, TT**24**, TT**25**, TT**26**, TT**27**, TT**28**, and TT**29**. Each of the first test transistors TT**11**, TT**12**, TT**13**, TT**14**, TT**15**, TT**16**, TT**17**, TT**18**, and TT**19** may include a gate terminal coupled to the first test gate line **685**, a source terminal coupled to the test data line **680**, and a drain terminal coupled to a corresponding one of the plurality of nodes N**1**, N**2**, N**3**, N**4**, N**5**, N**6**, N**7**, N**8**, and N**9**. Each of the second test transistors TT**21**, TT**22**, TT**23**, TT**24**, TT**25**, TT**26**, TT**27**, TT**28**, and TT**29** may include a gate terminal coupled to the second test gate line **686**, a source terminal coupled to a corresponding one of the plurality of nodes N**1**, N**2**, N**3**, N**4**, N**5**, N**6**, N**7**, N**8**, and N**9**, and a drain terminal coupled to a corresponding one of the plurality of data lines DL**1**, DL**2**, DL**3**, DL**4**, DL**5**, DL**6**, DL**7**, DL**8**, and DL**9**.

During a sheet unit test, a test data voltage may be applied to the test data line **680**, and a low gate voltage VGL may be applied to the first and second test gate lines **685** and **686**. During the sheet unit test, the first test transistors TT**11**, TT**12**, TT**13**, TT**14**, TT**15**, TT**16**, TT**17**, TT**18**, and TT**19** may couple the test data line **680** to the plurality of nodes N**1**, N**2**, N**3**, N**4**, N**5**, N**6**, N**7**, N**8**, and N**9** in response to the low gate voltage VGL applied through the first test gate line **685**, and the second test transistors TT**21**, TT**22**, TT**23**, TT**24**, TT**25**, TT**26**, TT**27**, TT**28**, and TT**29** may couple the plurality of nodes N**1**, N**2**, N**3**, N**4**, N**5**, N**6**, N**7**, N**8**, and N**9** to the plurality of data lines DL**1**, DL**2**, DL**3**, DL**4**, DL**5**, DL**6**, DL**7**, DL**8**, and DL**9** in response to the low gate voltage VGL applied through the second test gate line **686**. Accordingly, during the sheet unit test, the test data line **680** may be coupled to the plurality of data lines DL**1**, DL**2**, DL**3**, DL**4**, DL**5**, DL**6**, DL**7**, DL**8**, and DL**9** through the first test transistors TT**11**, TT**12**, TT**13**, TT**14**, TT**15**, TT**16**, TT**17**, TT**18**, and TT**19**, and the second test transistors TT**21**, TT**22**, TT**23**, TT**24**, TT**25**, TT**26**, TT**27**, TT**28**, and TT**29**, and the test data voltage applied to the test data line **680** may be provided to the plurality of data lines DL**1**, DL**2**, DL**3**, DL**4**, DL**5**, DL**6**, DL**7**, DL**8**, and DL**9**.

During a normal operation of the organic light emitting display device **600**, a high gate voltage VGH may be applied to the first and second test gate lines **685** and **686**. Thus, the first test transistors TT**11**, TT**12**, TT**13**, TT**14**, TT**15**, TT**16**, TT**17**, TT**18**, and TT**19** and the second test transistors TT**21**, TT**22**, TT**23**, TT**24**, TT**25**, TT**26**, TT**27**, TT**28**, and TT**29** may be turned off to electrically decouple the test data line **680** from the plurality of data lines DL**1**, DL**2**, DL**3**, DL**4**, DL**5**, DL**6**, DL**7**, DL**8**, and DL**9**. Even if one of the first test gate line **685** and the second test gate line **686** is damaged, the other of the first test gate line **685** and the second test gate line **686** may electrically decouple the test data line **680** from the plurality of data lines DL**1**, DL**2**, DL**3**, DL**4**, DL**5**, DL**6**, DL**7**, DL**8**, and DL**9**. For example, even if the first test gate line **685** is damaged during the normal operation, the second test transistors TT**21**, TT**22**, TT**23**, TT**24**, TT**25**, TT**26**, TT**27**, TT**28**, and TT**29** may be turned off in response to the second test gate line **686**, and thus the test data line **680** may be electrically decoupled from the plurality of data lines DL**1**, DL**2**, DL**3**, DL**4**, DL**5**, DL**6**, DL**7**, DL**8**, and DL**9**.

In some example embodiments, at least a portion of the first test gate line **685** (e.g., a pad region of the first test gate line **685**) may be disposed in a first direction (e.g., a right direction) from the display unit **610**, and at least a portion of the second test gate line **686** (e.g., a pad region of the second test gate line **686**) may be disposed in a second direction (e.g., a left direction) opposite to the first direction from the display unit **610**. Accordingly, even if a damage occurs at a right region or a bottom right region of the organic light emitting display device **600** and the first test gate line **685** is cut off, the second test transistors TT**21**, TT**22**, TT**23**, TT**24**, TT**25**, TT**26**, TT**27**, TT**28**, and TT**29** coupled to the second test gate line **686** may electrically decouple the test data line **680** from the plurality of data lines DL**1**, DL**2**, DL**3**, DL**4**, DL**5**, DL**6**, DL**7**, DL**8**, and DL**9**. Further, even if damage occurs at a left region or a bottom left region of the organic light emitting display device **600** and the second test gate line **686** is cut off, the first test transistors TT**11**, TT**12**, TT**13**, TT**14**, TT**15**, TT**16**, TT**17**, TT**18**, and TT**19** coupled to the first test gate line **685** may electrically decouple the test data line **680** from the plurality of data lines DL**1**, DL**2**, DL**3**, DL**4**, DL**5**, DL**6**, DL**7**, DL**8**, and DL**9**.

As described above, during the normal operation of the organic light emitting display device **600**, the first test transistors TT**11**, TT**12**, TT**13**, TT**14**, TT**15**, TT**16**, TT**17**, TT**18**, and TT**19** coupled to the first test gate line **685** and the second test transistors TT**21**, TT**22**, TT**23**, TT**24**, TT**25**, TT**26**, TT**27**,

TT**28**, and TT**29** coupled to the second test gate line **686** may electrically decouple first through third test data lines **681**, **682**, and **683** from the plurality of data lines DL**1**, DL**2**, DL**3**, DL**4**, DL**5**, DL**6**, DL**7**, DL**8**, and DL**9**. Thus, even if either the first test gate line **685** or the second test gate line **686** is damaged, the first through third test data lines **681**, **682**, and **683** may be electrically decoupled from the plurality of data lines DL**1**, DL**2**, DL**3**, DL**4**, DL**5**, DL**6**, DL**7**, DL**8**, and DL**9**. Accordingly, the organic light emitting display device **600** according to example embodiments may accurately display a desired image even if the first test gate line **685** or the second test gate line **686** is damaged.

FIG. **7** is a diagram illustrating an organic light emitting display device in accordance with example embodiments. Referring to FIG. **7**, an organic light emitting display device **700** may include a display unit **710**, a scan driver **730**, a data driver **760**, a test unit **770**, a test data line **780**, a first test gate line **785** and a second test gate line **786**. The organic light emitting display device **700** of FIG. **7** may have a similar configuration to an organic light emitting display device **600** of FIG. **6**, except that transistors included in the organic light emitting display device **700** of FIG. **7**, for example, the plurality of first test transistors TT**11**, TT**12**, TT**13**, TT**14**, TT**15**, TT**16**, TT**17**, TT**18**, and TT**19** and the plurality of second test transistors TT**21**, TT**22**, TT**23**, TT**24**, TT**25**, TT**26**, TT**27**, TT**28**, and TT**29** are implemented with NMOS transistors, rather than the PMOS transistors of FIG. **6**.

During a normal operation of the organic light emitting display device **700**, a low gate voltage VGL may be applied to the first test gate line **785** and the second test gate line **786**. Accordingly, the first test transistors TT**11**, TT**12**, TT**13**, TT**14**, TT**15**, TT**16**, TT**17**, TT**18**, and TT**19** and the second test transistors TT**21**, TT**22**, TT**23**, TT**24**, TT**25**, TT**26**, TT**27**, TT**28**, and TT**29** may be turned off, and thus the test data line **780** may be electrically decoupled from the plurality of data lines DL**1**, DL**2**, DL**3**, DL**4**, DL**5**, DL**6**, DL**7**, DL**8**, and DL**9**.

Even if one of the first test gate line **785** and the second test gate line **786** is damaged, a plurality of test transistors coupled to the other of the first test gate line **785** and the second test gate line **786** may electrically decouple the test data line **780** from the plurality of data lines DL**1**, DL**2**, DL**3**, DL**4**, DL**5**, DL**6**, DL**7**, DL**8**, and DL**9**.

As described above, during the normal operation of the organic light emitting display device **700**, the first test transistors TT**11**, TT**12**, TT**13**, TT**14**, TT**15**, TT**16**, TT**17**, TT**18**, and TT**19** coupled to the first test gate line **785** and the second test transistors TT**21**, TT**22**, TT**23**, TT**24**, TT**25**, TT**26**, TT**27**, TT**28**, and TT**29** coupled to the second test gate line **786** may electrically decouple first through third test data lines **781**, **782** and **783** from the plurality of data lines DL**1**, DL**2**, DL**3**, DL**4**, DL**5**, DL**6**, DL**7**, DL**8**, and DL**9**. Thus, even if either the first test gate line **785** or the second test gate line **786** is damaged, the first through third test data lines **781**, **782**, and **783** may be electrically decoupled from the plurality of data lines DL**1**, DL**2**, DL**3**, DL**4**, DL**5**, DL**6**, DL**7**, DL**8**, and DL**9**. Accordingly, the organic light emitting display device **700** according to example embodiments may accurately display a desired image even if the first test gate line **785** or the second test gate line **786** is damaged.

FIG. **8** is a block diagram illustrating an electronic system including an organic light emitting display device in accordance with example embodiments. Referring to FIG. **8**, an electronic system **1000** includes a processor **1010**, a memory device **1020**, a storage device **1030**, an input/output (I/O) device **1040**, a power supply **1050**, and an organic light emitting display device **1060**. The electronic system **1000** may further include a plurality of ports for communicating a video card, a sound card, a memory card, a universal serial bus (USB) device, other electronic systems, etc.

The processor **1010** may perform various computing functions or tasks. The processor **1010** may be for example, a microprocessor, a central processing unit (CPU), etc. The processor **1010** may be connected to other components via an address bus, a control bus, a data bus, etc. Further, the processor **1010** may be coupled to an extended bus such as a peripheral component interconnection (PCI) bus.

The memory device **1020** may store data for operations of the electronic system **1000**. For example, the memory device **1020** may include at least one non-volatile memory device such as an erasable programmable read-only memory (EPROM) device, an electrically erasable programmable read-only memory (EEPROM) device, a flash memory device, a phase change random access memory (PRAM) device, a resistance random access memory (RRAM) device, a nano floating gate memory (NFGM) device, a polymer random access memory (PoRAM) device, a magnetic random access memory (MRAM) device, a ferroelectric random access memory (FRAM) device, etc, and/or at least one volatile memory device such as a dynamic random access memory (DRAM) device, a static random access memory (SRAM) device, a mobile dynamic random access memory (mobile DRAM) device, etc.

The storage device **1030** may be, for example, a solid state drive (SSD) device, a hard disk drive (HDD) device, a CD-ROM device, etc. The I/O device **1040** may be, for example, an input device such as a keyboard, a keypad, a mouse, a touch screen, etc, and/or an output device such as a printer, a speaker, etc. The power supply **1050** may supply power for operations of the electronic system **1000**. The organic light emitting display device **1060** may communicate with other components via the buses or other communication links.

The organic light emitting display device **1060** may be one of the organic light emitting display devices **200***b*, **300**, **400**, **500**, **600**, and **700** of FIGS. **2**B through **7**. The organic light emitting display device **1060** may electrically decouple a test voltage line from a display unit during a normal operation even if a test gate line is damaged by using at least one redundant element, e.g., at least one voltage maintaining transistor or additional test transistors connected in series with typical test transistors.

The present embodiments may be applied to any electronic system **1000** having an organic light emitting display device. For example, the present embodiments may be applied to the electronic system **1000**, such as a television, a computer monitor, a laptop computer, a tablet computer, a digital camera, a cellular phone, a smart phone, a personal digital assistant (PDA), a portable multimedia player (PMP), a MP3 player, a navigation system, a video phone, etc.

The foregoing is illustrative of example embodiments, and is not to be construed as limiting thereof. Although a few example embodiments have been described, those skilled in the art will readily appreciate that many modifications are possible in the example embodiments without materially departing from the novel teachings and advantages of example embodiments. Accordingly, all such modifications are intended to be included within the scope of example embodiments as defined in the claims. In the claims, means-plus-function clauses are intended to cover the structures described herein as performing the recited function and not only structural equivalents but also equivalent structures. Therefore, it is to be understood that the foregoing is illustrative of example embodiments and is not to be construed as limited to the specific embodiments disclosed, and that modifications to the disclosed example embodiments, as well as

other example embodiments, are intended to be included within the scope of the appended claims. The inventive concept is defined by the following claims, with equivalents of the claims to be included therein.

What is claimed is:

1. An organic light emitting display device, comprising:

a display unit including a plurality of pixels coupled to a plurality of scan lines and a plurality of data lines;

a test data line to which a test data voltage is applied during a sheet unit test;

a test gate line to which a first voltage is applied during the sheet unit test and to which a second voltage is applied during a normal operation of the organic light emitting display device;

a plurality of test transistors configured to selectively couple the test data line to the plurality of data lines in response to the first voltage or the second voltage applied through the test gate line;

an internal voltage line to which the second voltage is applied; and

at least one voltage maintaining transistor configured to couple the internal voltage line to the test gate line during the normal operation.

2. The organic light emitting display device of claim **1**, wherein:

during the sheet unit test, the at least one voltage maintaining transistor is turned off to decouple the internal voltage line from the test gate line, and

during the normal operation, the at least one voltage maintaining transistor is turned on to couple the internal voltage line to the test gate line such that the test gate line maintains the second voltage even if the test gate line is damaged.

3. The organic light emitting display device of claim **1**, further comprising:

a control voltage line coupled to the at least one voltage maintaining transistor,

wherein the second voltage is applied to the control voltage line during the sheet unit test, and the first voltage is applied to the control voltage line during the normal operation.

4. The organic light emitting display device of claim **3**, wherein the at least one voltage maintaining transistor has a gate terminal coupled to the control voltage line, a source terminal coupled to the internal voltage line, and a drain terminal coupled to the test gate line.

5. The organic light emitting display device of claim **3**, wherein the at least one voltage maintaining transistor comprises:

a plurality of voltage maintaining transistors, each voltage maintaining transistor having a gate terminal coupled to the control voltage line, a source terminal coupled to the internal voltage line, and a drain terminal coupled to the test gate line.

6. The organic light emitting display device of claim **3**, wherein the at least one voltage maintaining transistor comprises:

a first voltage maintaining transistor having a gate terminal coupled to the control voltage line, a source terminal coupled to the internal voltage line, and a drain terminal coupled to the test gate line, the first voltage maintaining transistor being disposed in a first direction from the displaying unit; and

a second voltage maintaining transistor having a gate terminal coupled to the control voltage line, a source terminal coupled to the internal voltage line, and a drain terminal coupled to the test gate line, the second voltage maintaining transistor being disposed in a second direction opposite to the first direction from the displaying unit.

7. The organic light emitting display device of claim **1**, wherein the plurality of test transistors are configured to couple the test data line to the plurality of data lines in response to the first voltage applied through the test gate line during the sheet unit test, and are configured to decouple the test data line from the plurality of data lines in response to the second voltage applied through the test gate line during the normal operation.

8. The organic light emitting display device of claim **1**, wherein the plurality of test transistors and the at least one voltage maintaining transistor are implemented with PMOS transistors.

9. The organic light emitting display device of claim **8**, wherein the first voltage is a low gate voltage and the second voltage is a high gate voltage.

10. The organic light emitting display device of claim **1**, wherein the plurality of test transistors and the at least one voltage maintaining transistor are implemented with NMOS transistors.

11. The organic light emitting display device of claim **10**, wherein the first voltage is a high gate voltage and the second voltage is a low gate voltage.

12. An organic light emitting display device, comprising:

a display unit including a plurality of pixels coupled to a plurality of scan lines and a plurality of data lines;

a test data line to which a test data voltage is applied during a sheet unit test;

a first test gate line to which a first voltage is applied during the sheet unit test and to which a second voltage is applied during a normal operation of the organic light emitting display device;

a plurality of first test transistors configured to selectively couple the test data line to a plurality of nodes in response to the first voltage or the second voltage applied through the first test gate line;

a second test gate line to which the first voltage is applied during the sheet unit test and to which the second voltage is applied during the normal operation; and

a plurality of second test transistors configured to selectively couple the plurality of nodes to the plurality of data lines in response to the first voltage or the second voltage applied through the second test gate line, each of the second test transistors being coupled in series with a corresponding one of the first test transistors.

13. The organic light emitting display device of claim **12**, wherein the first test gate line is disposed in a first direction from the displaying unit, and the second test gate line is disposed in a second direction opposite to the first direction from the displaying unit.

14. The organic light emitting display device of claim **12**, wherein the first test transistors are configured to couple the test data line to the plurality of nodes in response to the first voltage applied through the first test gate line during the sheet unit test, and

wherein the second test transistors are configured to couple the plurality of nodes to the plurality of data lines in response to the first voltage applied through the second test gate line during the sheet unit test.

15. The organic light emitting display device of claim **12**, wherein, even if one of the first and second test gate lines is damaged, the first test transistors or the second test transistors coupled to the other one of the first and second test gate lines decouple the test data line from the plurality of data lines in

response to the second voltage applied through the other one of the first and second test gate lines during the normal operation.

16. The organic light emitting display device of claim **12**, wherein:

each of the first test transistors has a gate terminal coupled to the first test gate line, a source terminal coupled to the test data line, and a drain terminal coupled to a corresponding one of the plurality of nodes, and

each of the second test transistors has a gate terminal coupled to the second test gate line, a source terminal coupled to a corresponding one of the plurality of nodes, and a drain terminal coupled to a corresponding one of the plurality of data lines.

17. The organic light emitting display device of claim **12**, wherein the first test transistors and the second test transistors are implemented with PMOS transistors.

18. The organic light emitting display device of claim **17**, wherein the first voltage is a low gate voltage and the second voltage is a high gate voltage.

19. The organic light emitting display device of claim **12**, wherein the first test transistors and the second test transistors are implemented with NMOS transistors.

20. The organic light emitting display device of claim **19**, wherein the first voltage is a high gate voltage and the second voltage is a low gate voltage.

* * * * *