US009408967B2

(12) **United States Patent**
Yodfat et al.

(10) **Patent No.: US 9,408,967 B2**
(45) **Date of Patent: *Aug. 9, 2016**

(54) **DEVICE FOR DRUG DELIVERY**

(71) Applicant: **Roche Diabetes Care, Inc.**, Indianapolis, IN (US)

(72) Inventors: **Ofer Yodfat**, Maccabim-Reut (IL); **Gabriel J. Iddan**, Haifa (IL); **Illai Gescheit**, Tel-aviv (IL)

(73) Assignee: **Roche Diabetes Care, Inc.**, Indianapolis, IN (US)

(*) Notice: Subject to any disclaimer, the term of this patent is extended or adjusted under 35 U.S.C. 154(b) by 362 days.

This patent is subject to a terminal disclaimer.

(21) Appl. No.: **13/919,616**

(22) Filed: **Jun. 17, 2013**

(65) **Prior Publication Data**

US 2013/0281928 A1 Oct. 24, 2013

Related U.S. Application Data

(63) Continuation of application No. 12/733,009, filed as application No. PCT/IL2008/001058 on Jul. 31, 2008, now Pat. No. 8,465,460.

(60) Provisional application No. 60/963,071, filed on Aug. 1, 2007, provisional application No. 61/003,169, filed on Nov. 14, 2007.

(51) **Int. Cl.**

A61M 5/142	(2006.01)
A61M 5/14	(2006.01)
A61M 5/145	(2006.01)

(52) **U.S. Cl.**

CPC ***A61M 5/14244*** (2013.01); ***A61M 5/1413*** (2013.01); ***A61M 5/1424*** (2013.01);

(Continued)

(58) **Field of Classification Search**

CPC A61M 5/1413; A61M 5/14244; A61M 5/14248; A61M 5/14228; A61M 5/14232; A61M 5/14236; A61M 5/1456; A61M 5/1424

See application file for complete search history.

(56) **References Cited**

U.S. PATENT DOCUMENTS

3,279,653	A	10/1966	Pfleger
4,676,122	A	6/1987	Szabo et al.

(Continued)

FOREIGN PATENT DOCUMENTS

WO	WO-9723252	A1	7/1997
WO	WO-2006121921	A2	11/2006

(Continued)

OTHER PUBLICATIONS

DCCT Trial Research Group, "The Effect of Intensive Treatment of Diabetes on the Development and Progression of Long-Term Complications in Insulin-Dependent Diabetes Mellitus", *N. E. J. Med.*, 329:977-986 (1993).

Powers, A. C., "Diabetes Mellitus", in *Harrison's Principles of Internal Medicine*, 16th Edition, Kasper et al., Eds., McGraw-Hill, New York, Chapter 323, pp. 2151-2180 (2005).

(Continued)

Primary Examiner — Laura Bouchelle

(74) *Attorney, Agent, or Firm* — Dinsmore & Shohl LLP

(57) **ABSTRACT**

Disclosed is an ambulatory therapeutic fluid delivery device. The device includes at least one housing connectable to a cannula, the at least one housing retaining a reservoir to hold the therapeutic fluid. The device also includes a mechanically powered pumping mechanism to cause delivery of at least some of the fluid from the reservoir, and a power-transfer mechanism to transfer manually-delivered power provided by a user to mechanically actuate the pumping mechanism.

24 Claims, 43 Drawing Sheets

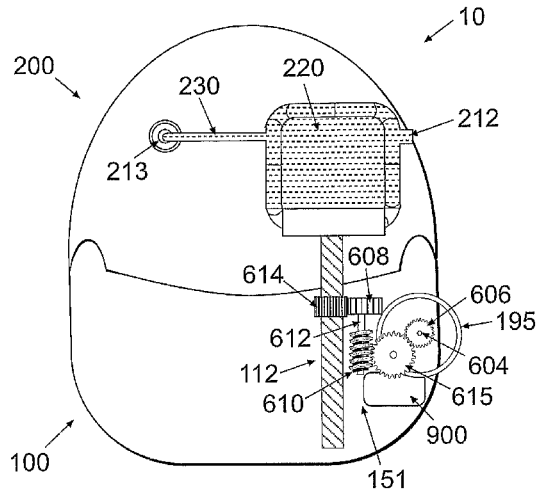

(52) **U.S. Cl.**
CPC ***A61M5/1454*** (2013.01); ***A61M 5/14248*** (2013.01); *A61M 5/1456* (2013.01); *A61M 5/14232* (2013.01); *A61M 2005/1405* (2013.01); *A61M 2205/071* (2013.01); *A61M 2209/045* (2013.01)

(56) **References Cited**

U.S. PATENT DOCUMENTS

5,830,187	A	11/1998	Kriesel et al.	
6,500,150	B1 *	12/2002	Gross et al.	604/131
8,465,460	B2 *	6/2013	Yodfat et al.	604/186
2002/0040208	A1	4/2002	Flaherty et al.	
2005/0182385	A1	8/2005	Epley	
2007/0106218	A1	5/2007	Yodfat et al.	
2010/0137695	A1	6/2010	Yodfat et al.	

FOREIGN PATENT DOCUMENTS

WO	WO-2008078318	A2	7/2008
WO	WO-2008122983	A1	10/2008
WO	WO-2009001346	A1	12/2008

OTHER PUBLICATIONS

International Search Report for PCT Application No. PCT/IL2008/001058, mailed Mar. 20, 2009.

Nathan et al., "Intensive Diabetes Treatment and Cardiovascular Disease in Patients with Type 1 Diabetes", *N.E. J. Med.*, 353(25):2643-2653 (2005).

Ratner, R. E., "Adjunctive Therapy with the Amylin Analogue Pramlintide Leads to a Combined Improvement in Glycemic and Weight Control in Insulin-Treated Subjects with Type 2 Diabetes", *Diabetes Tech. Therapy*, 4(1):51-61 (2002).

UKPDS Group Trial, "Tight blood pressure control and risk of macrovascular and microvascular complications in type 2 diabetes: UKPDS 38", *BMJ*, 314:703-713 (1998).

UKPDS Trial, "Intensive blood-glucose control with sulphonylureas or insulin compared with conventional treatment and risk of complications in patients with type 2 diabetes (UKPDS 33)", *Lancet*, 352:837-853 (1998).

White et al., "Clarifying the Role of Insulin in Type 2 Diabetes Management", Clinical Diabetes 21:14-21 (2003).

Written Opinion of the International Search Authority for PCT Application No. PCT/IL2008/001058, mailed Mar. 20, 2009.

* cited by examiner

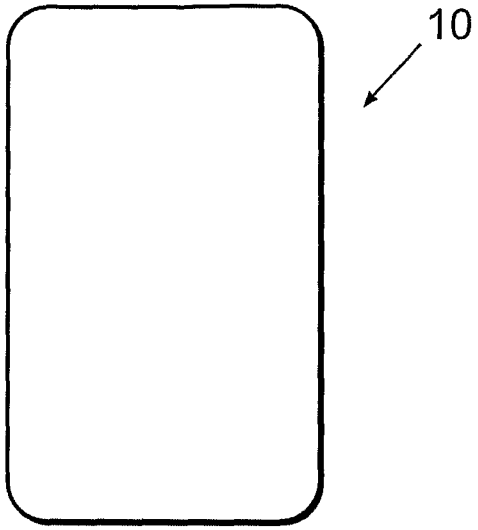

Fig. 1a

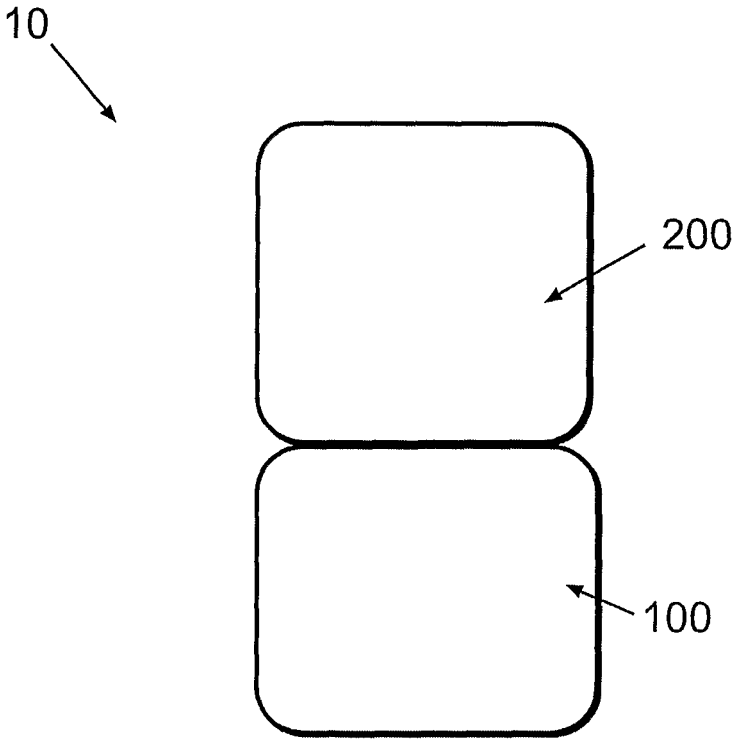

Fig. 1b

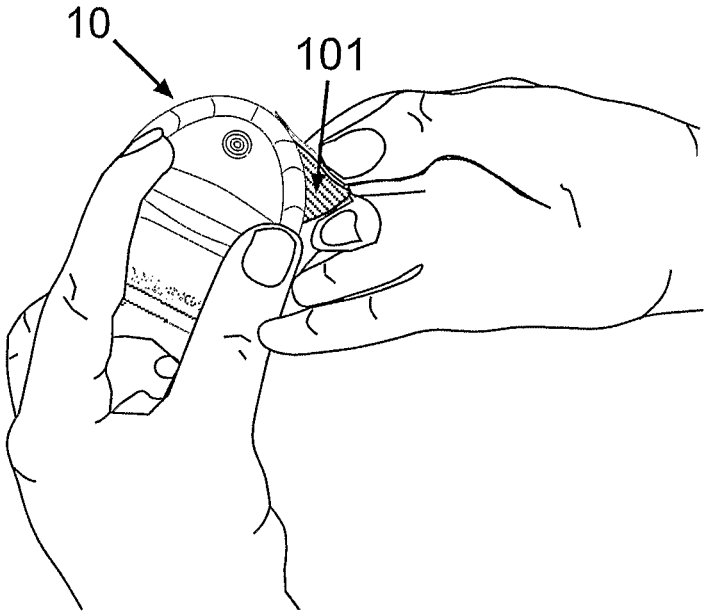

Fig. 2a

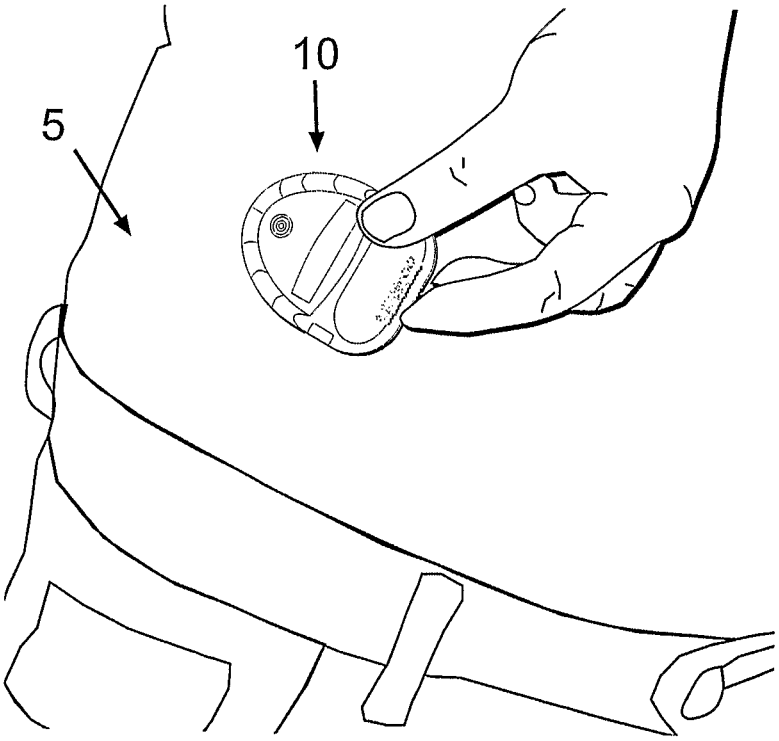

Fig. 2b

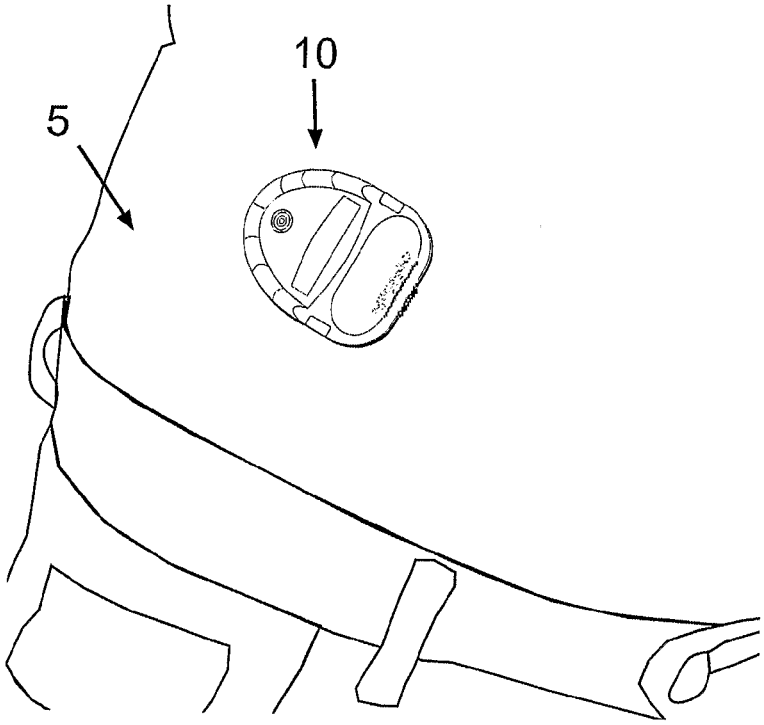

Fig. 2c

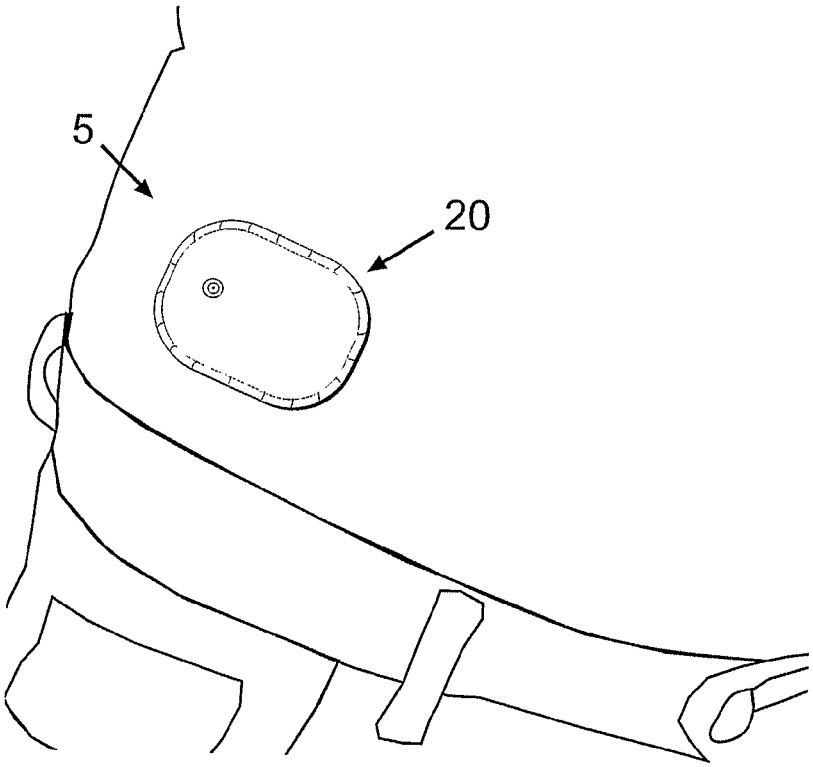

Fig. 3a

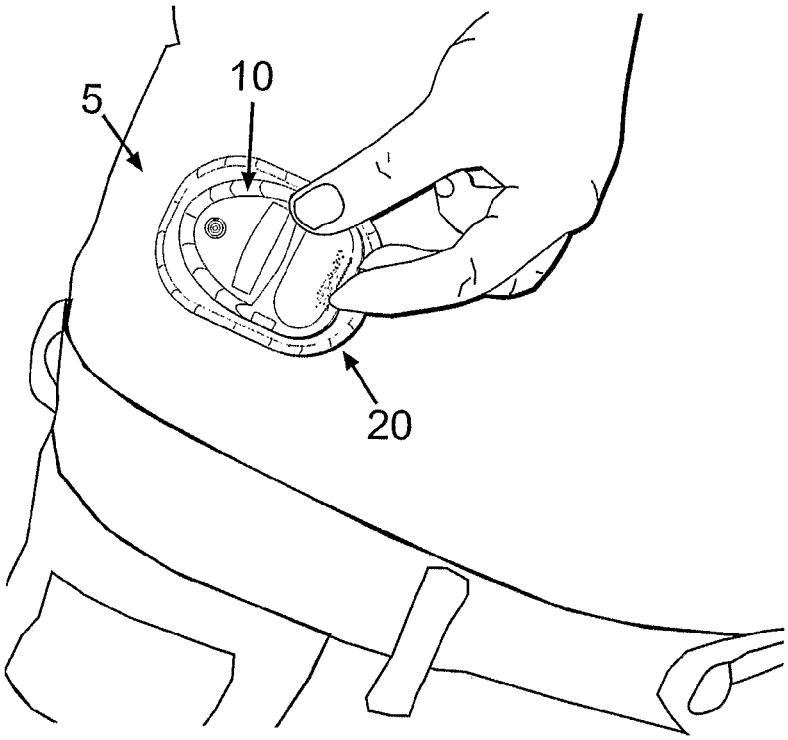

Fig. 3b

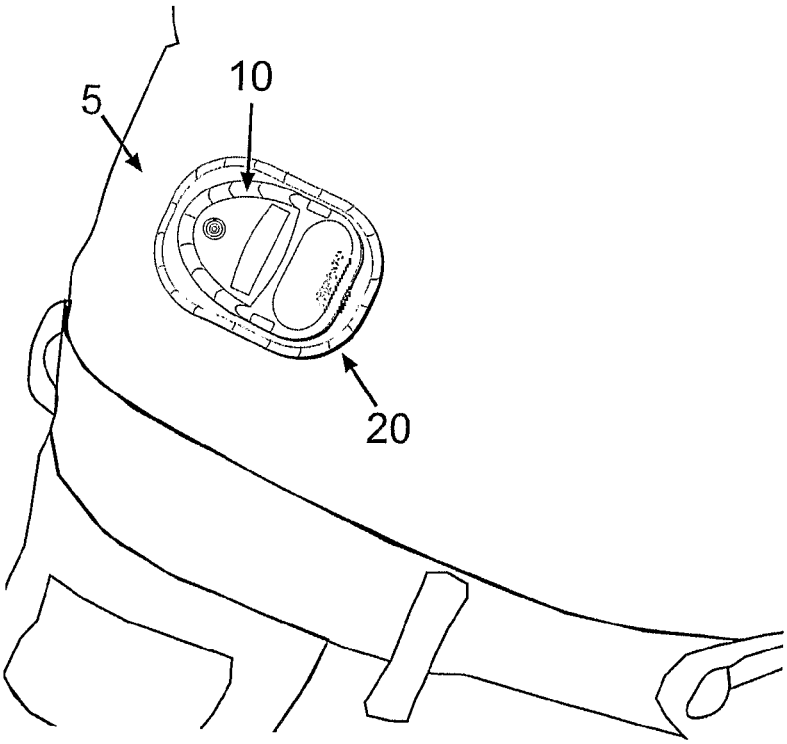

Fig. 3c

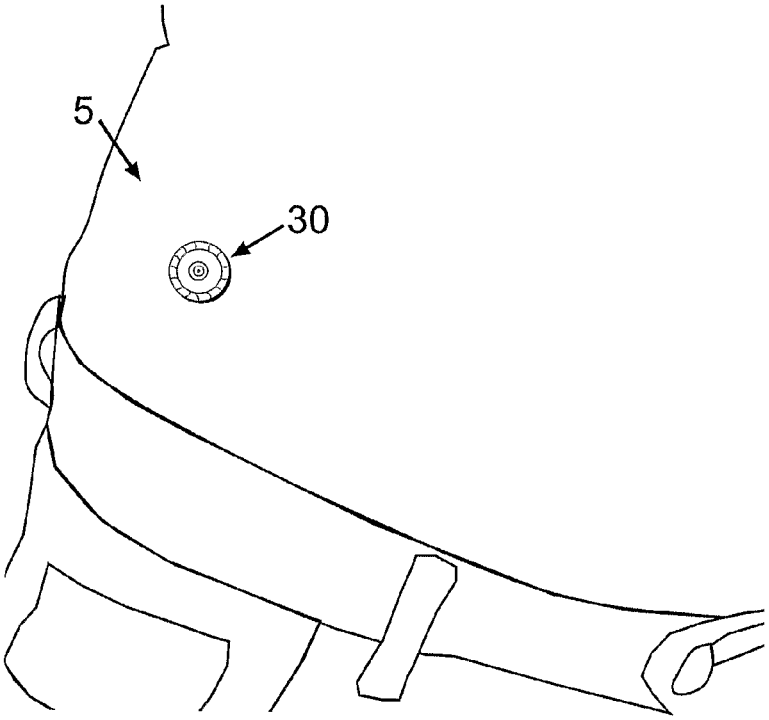

Fig. 4a

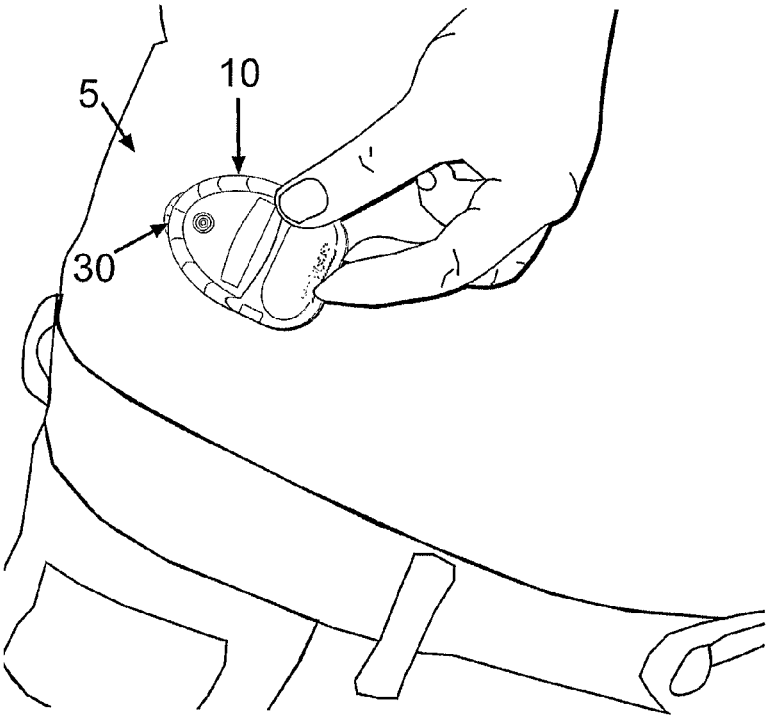

Fig. 4b

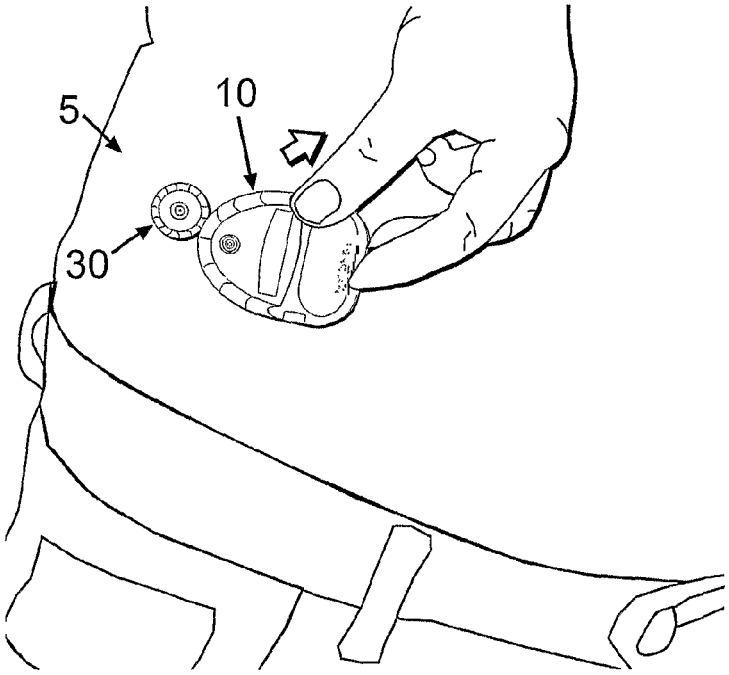

Fig. 4c

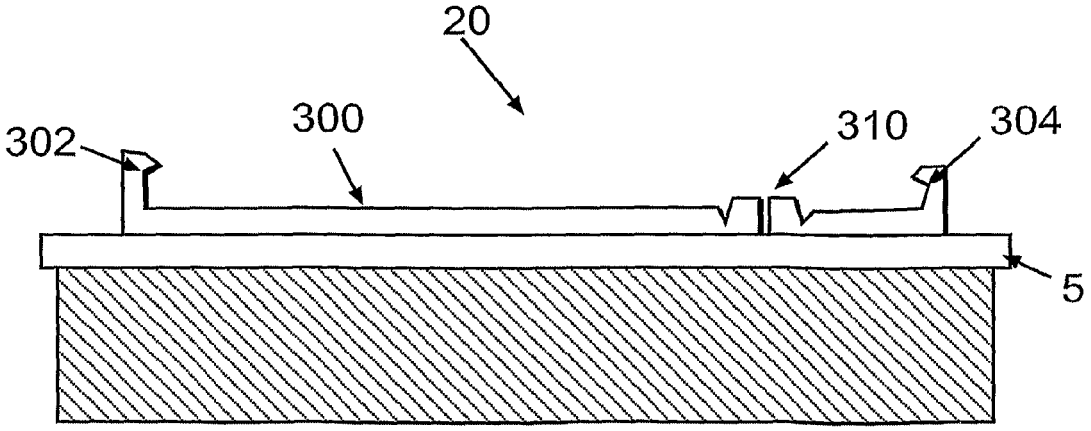

Fig. 5a

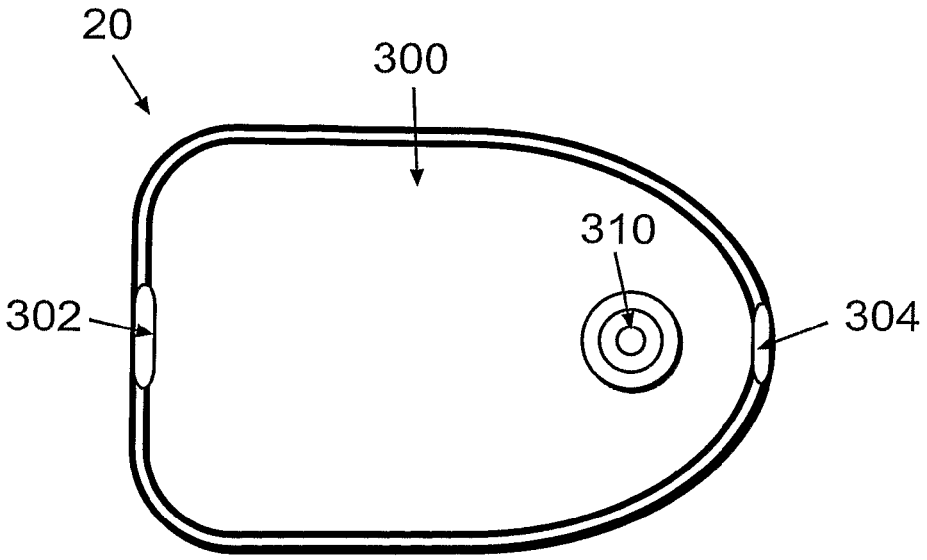

Fig. 5b

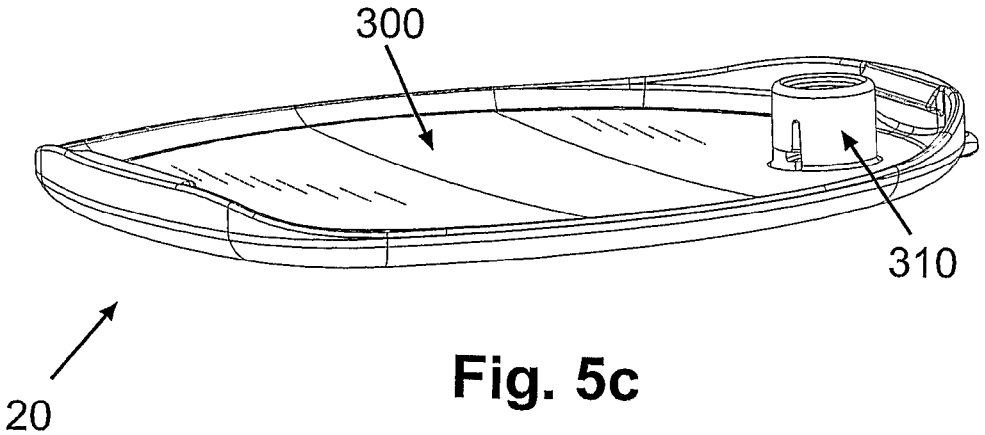

Fig. 5c

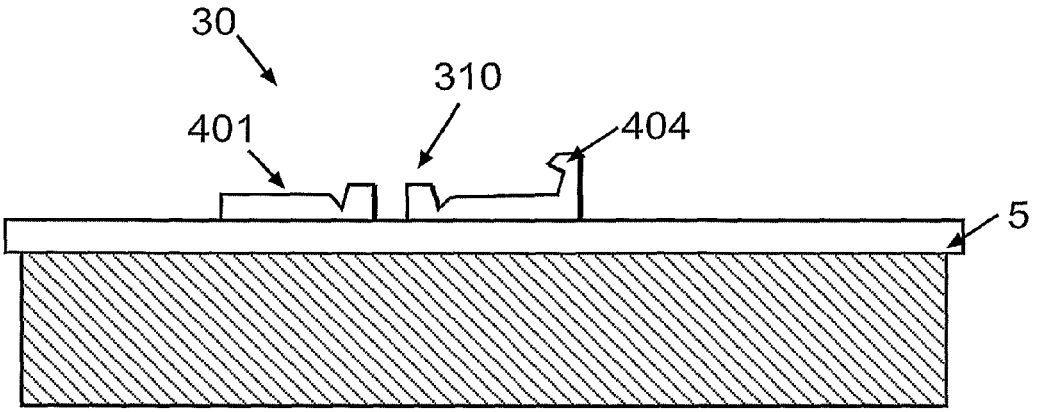

Fig. 6a

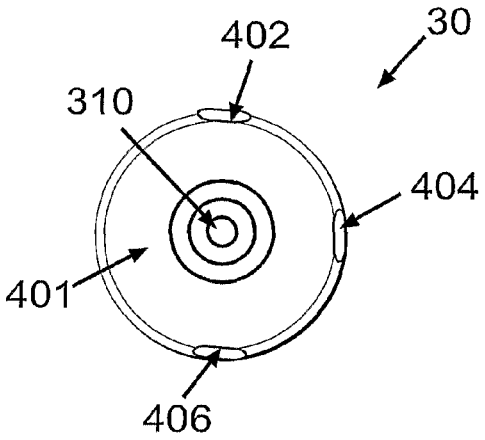

Fig. 6b

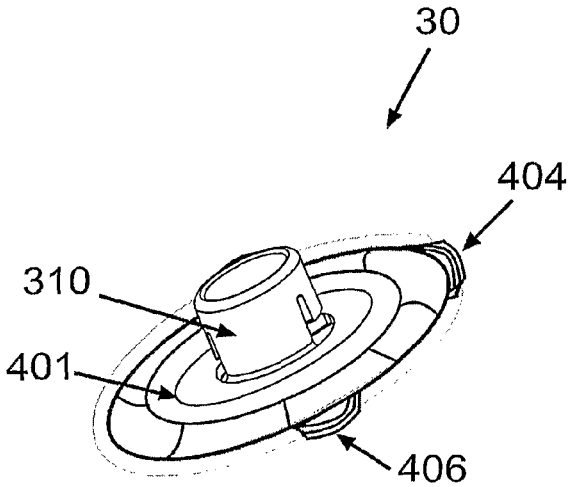

Fig. 6c

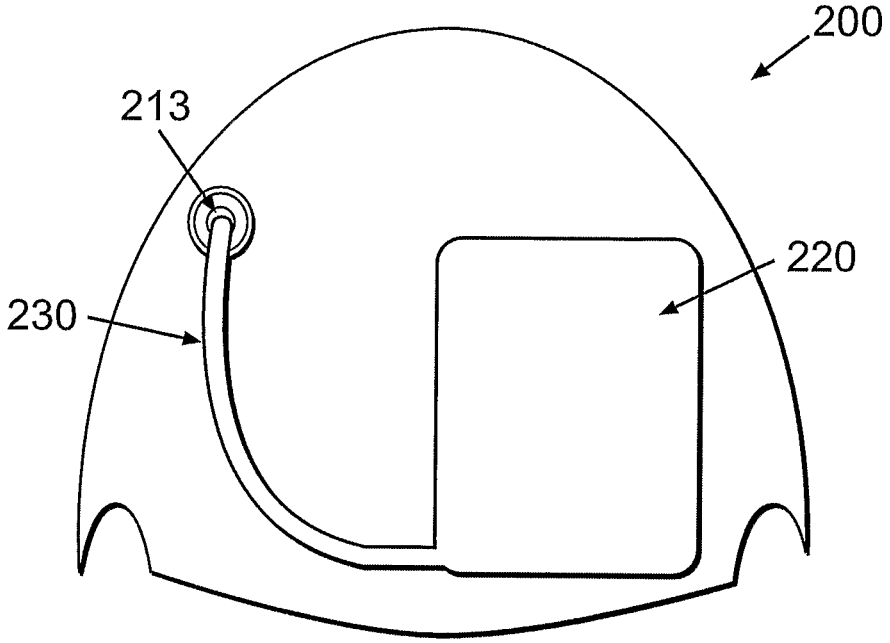

Fig. 7a

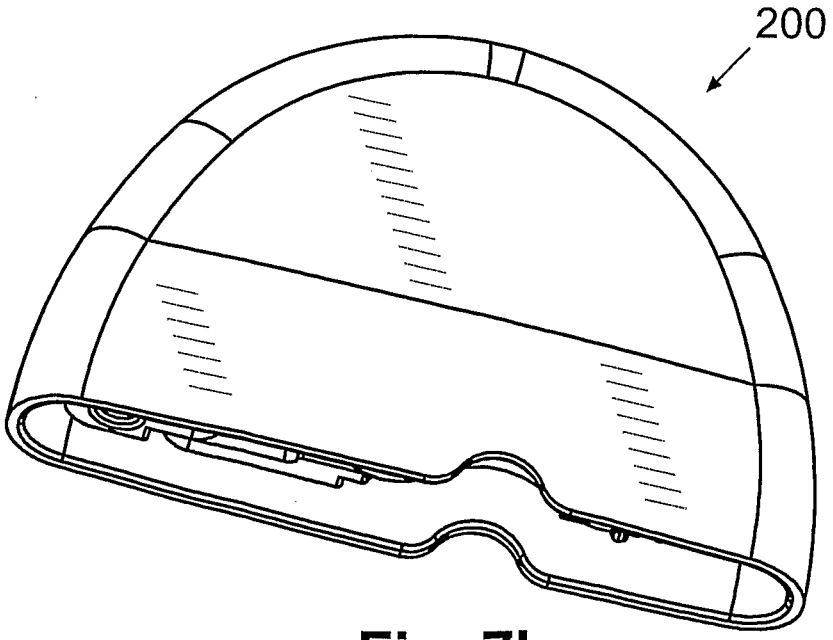

Fig. 7b

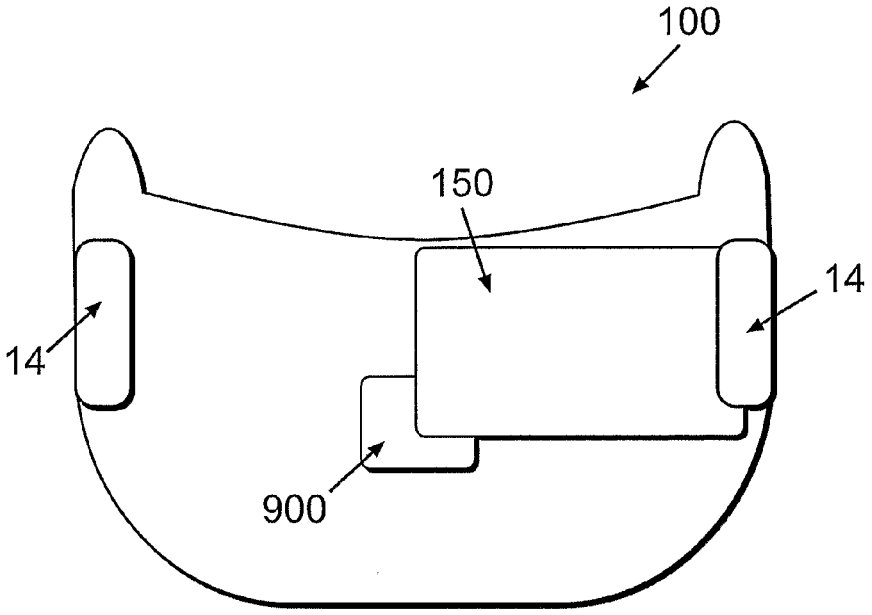

Fig. 8a

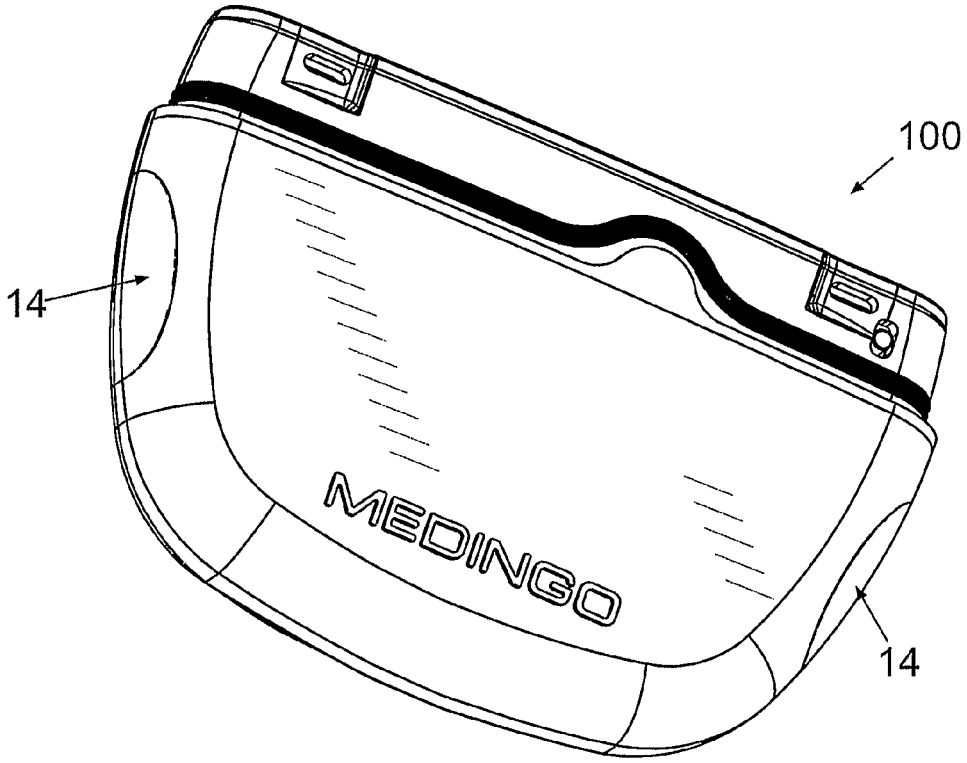

Fig. 8b

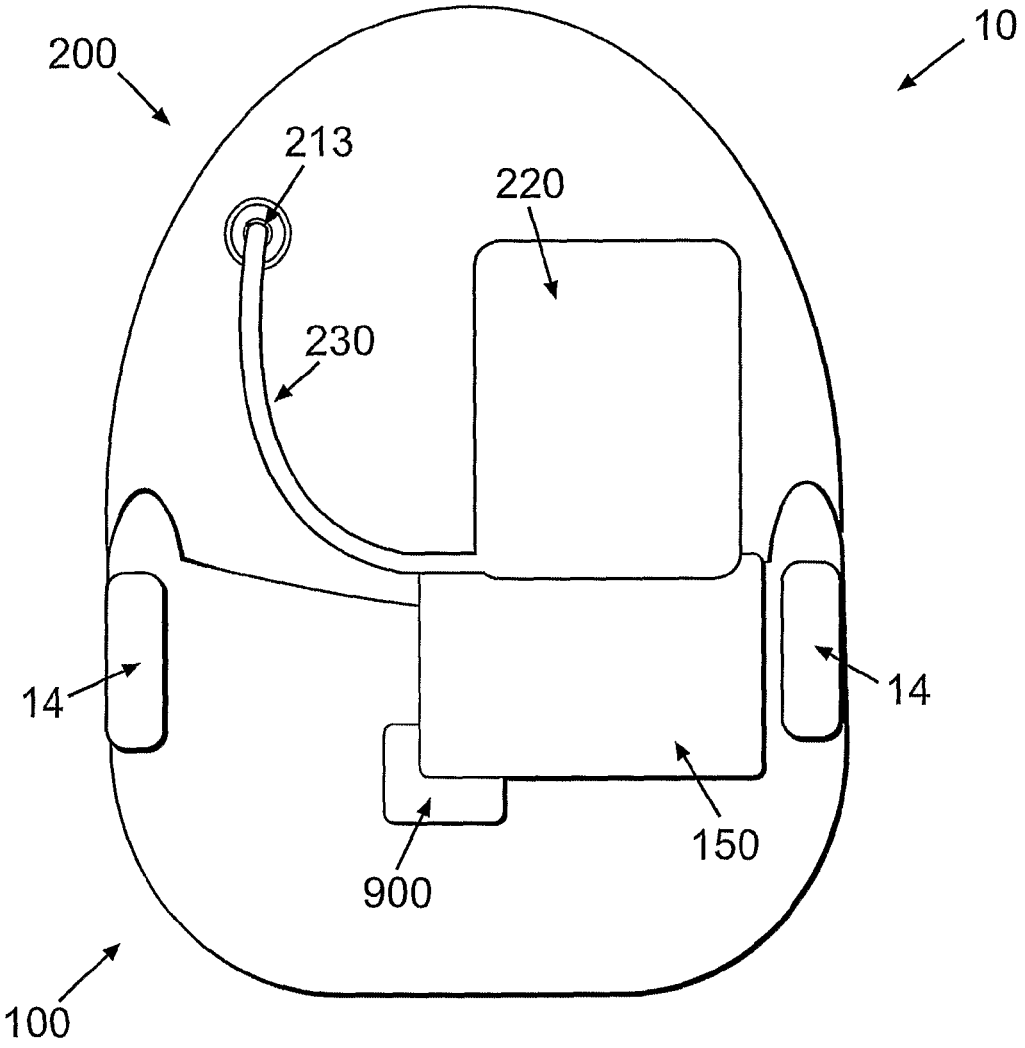

Fig. 9

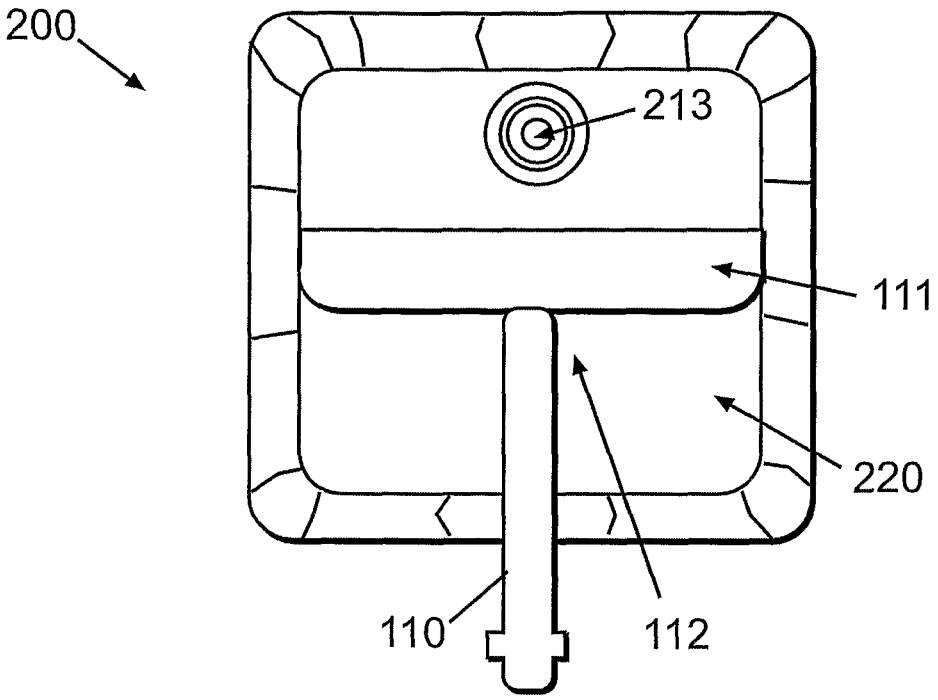

Fig. 10a

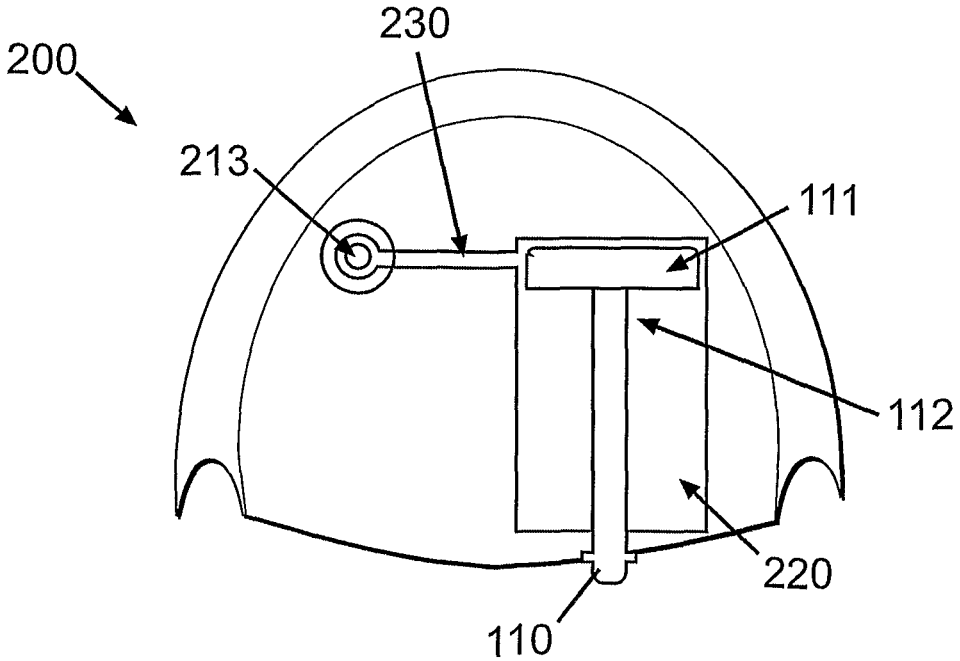

Fig. 10b

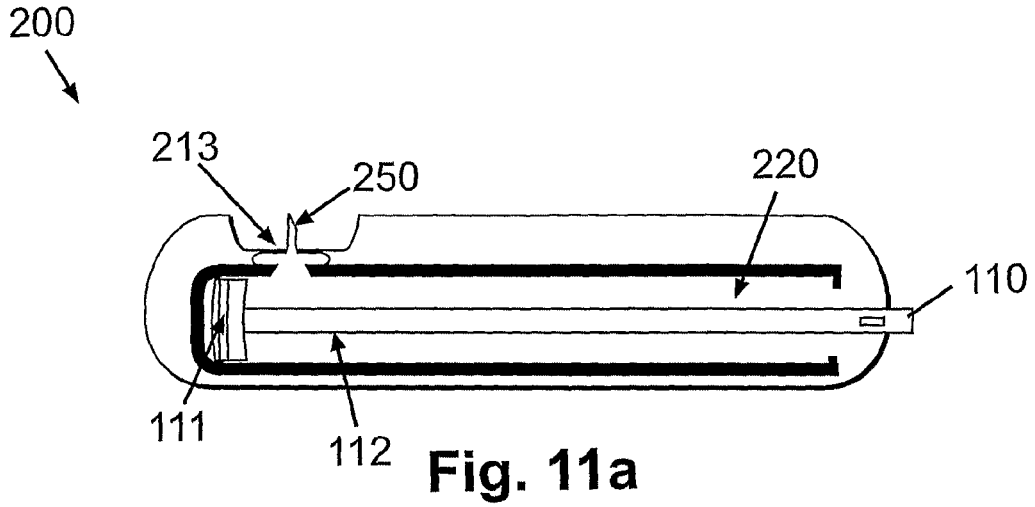

Fig. 11a

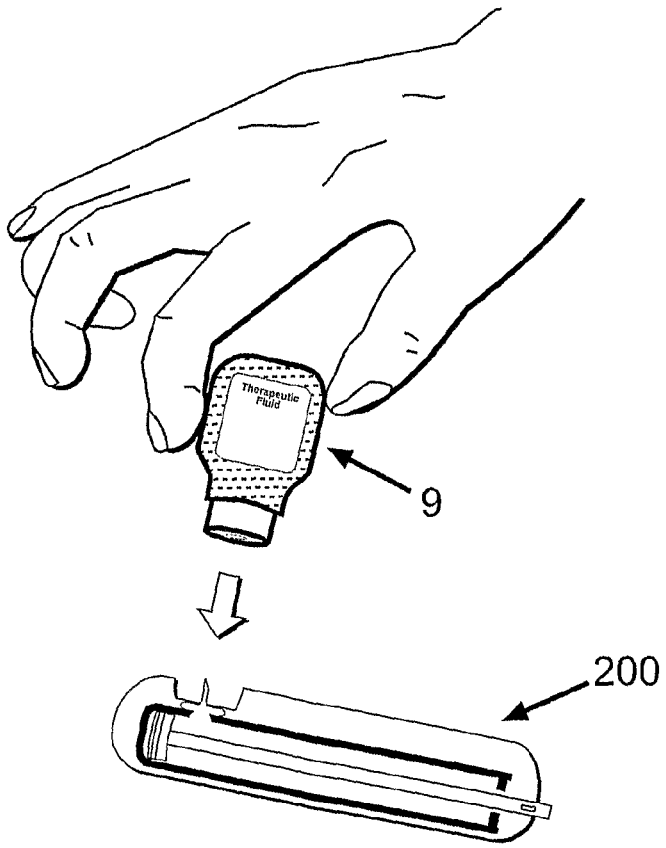

Fig. 11b

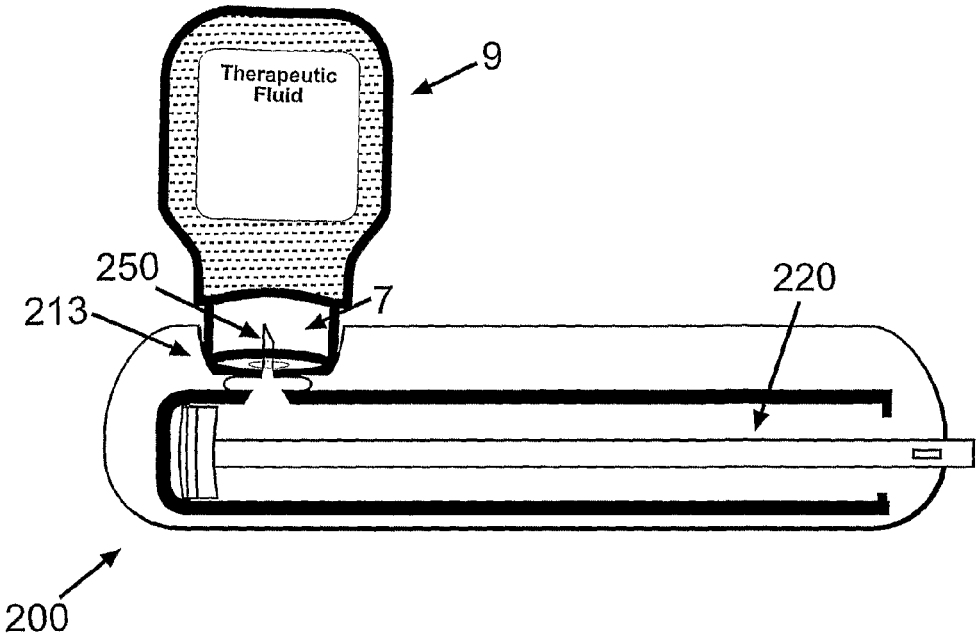

Fig. 11c

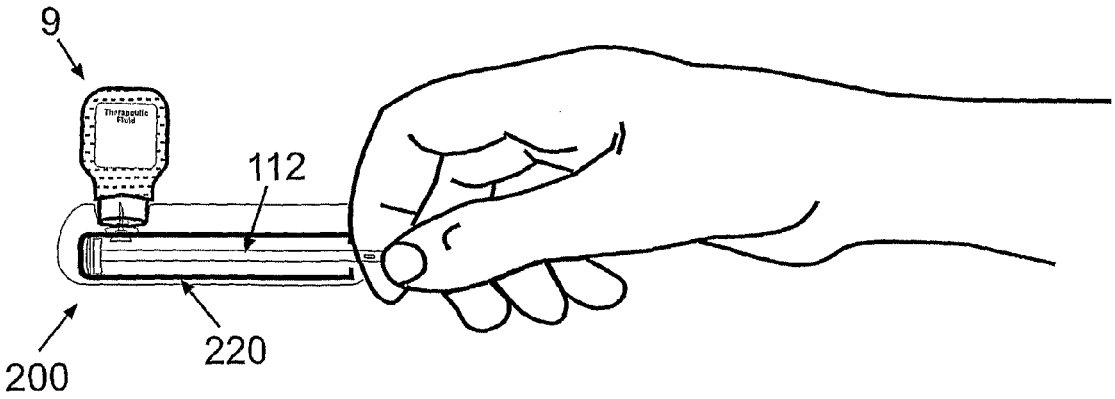

Fig. 11d

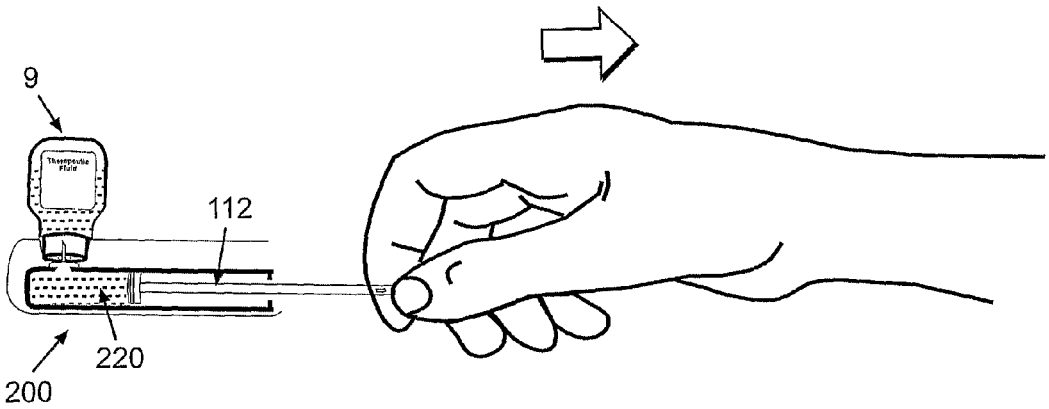

Fig. 11e

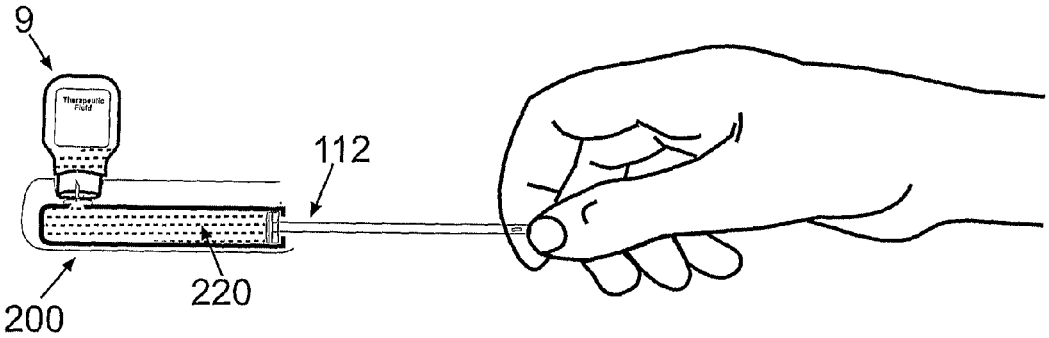

Fig. 11f

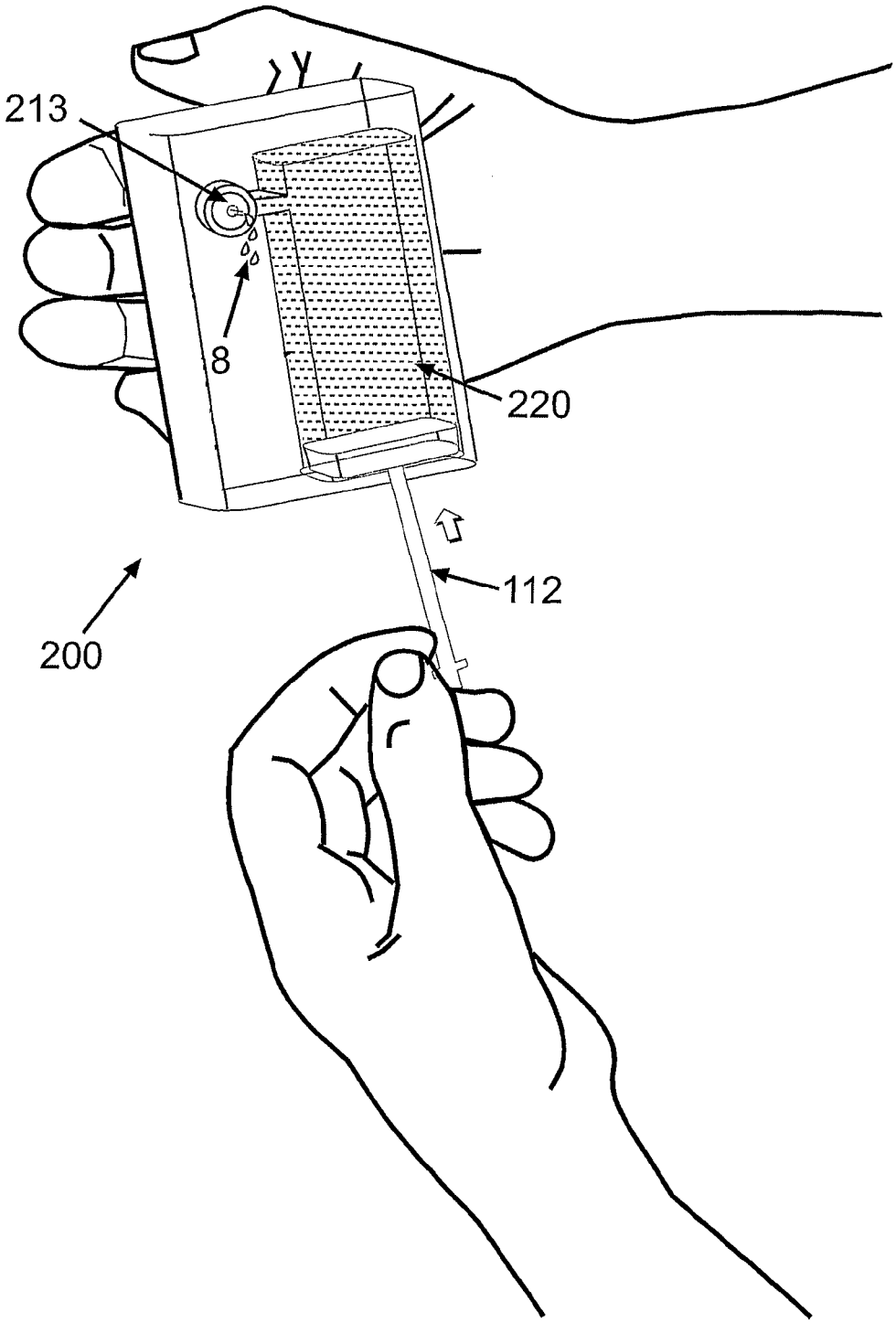

Fig. 11g

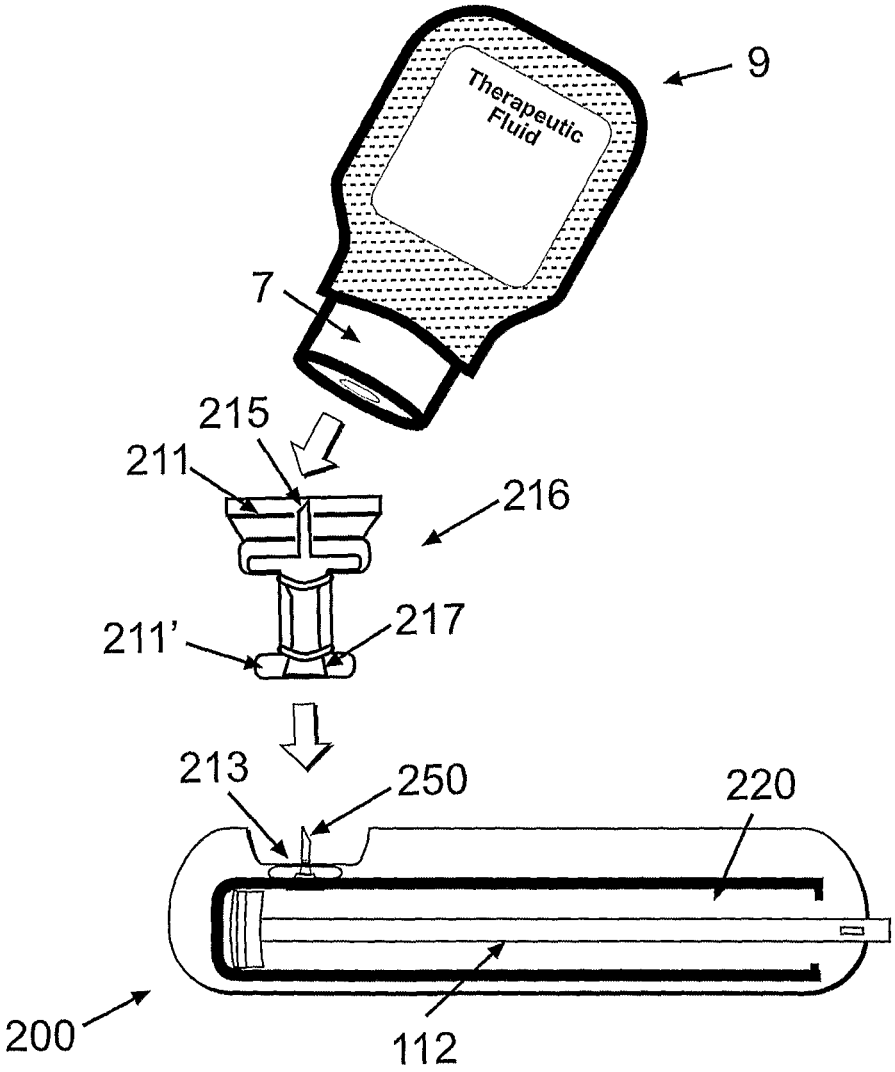

Fig. 12a

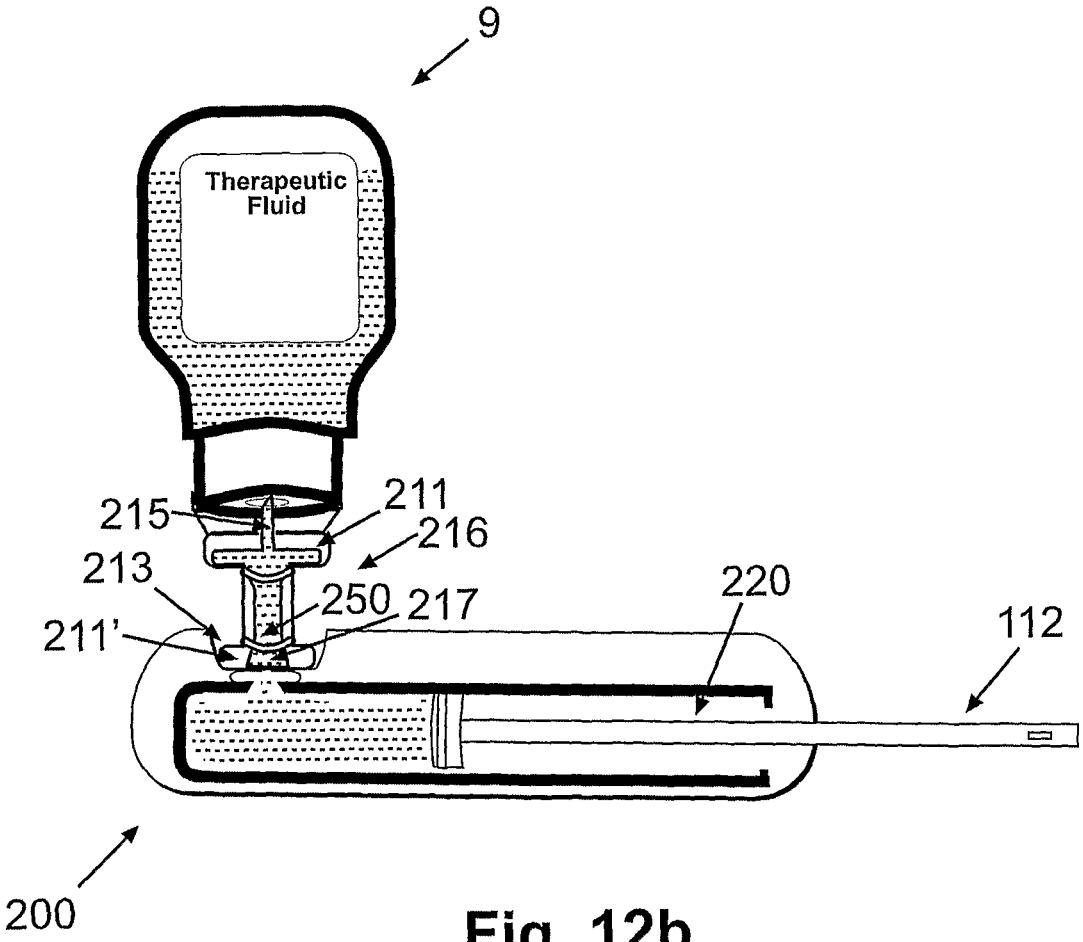

Fig. 12b

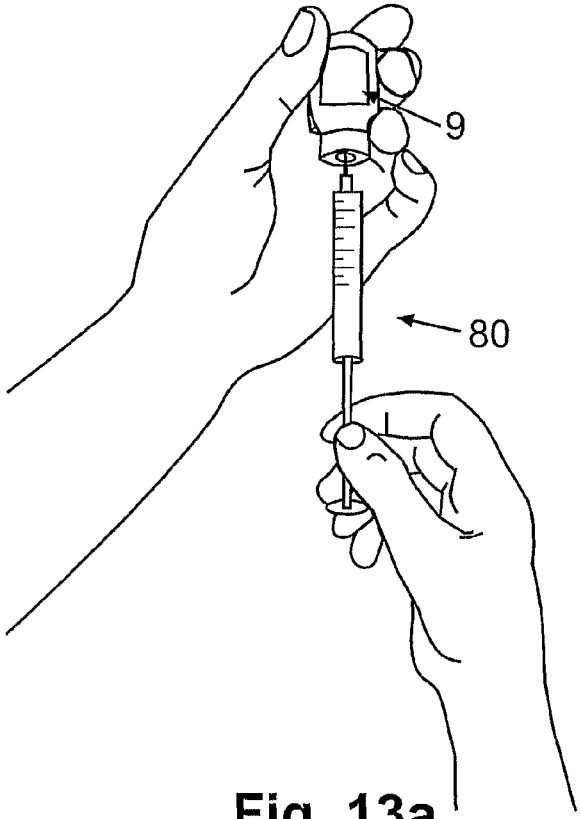

Fig. 13a

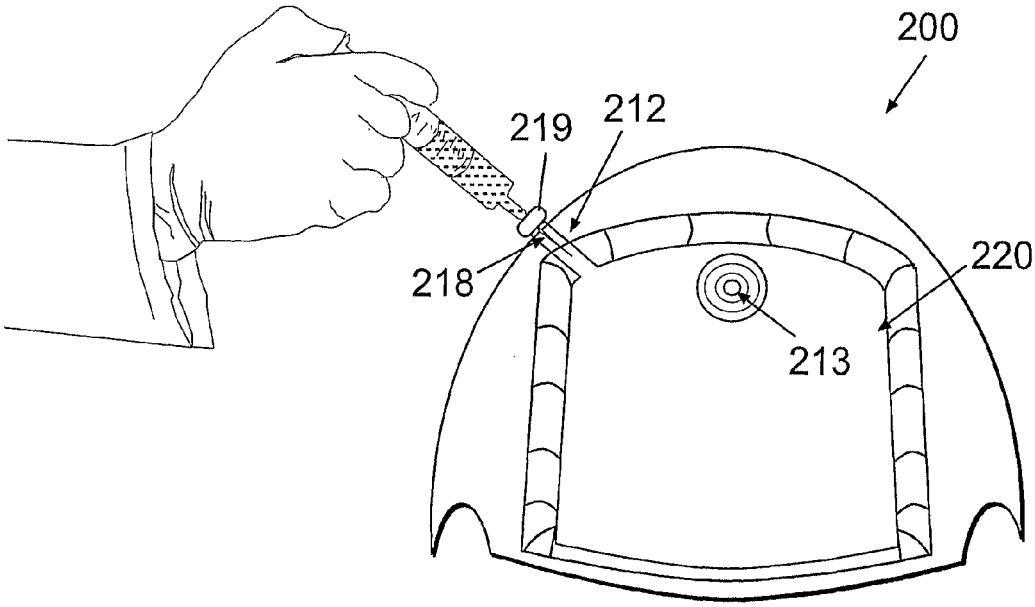

Fig. 13b

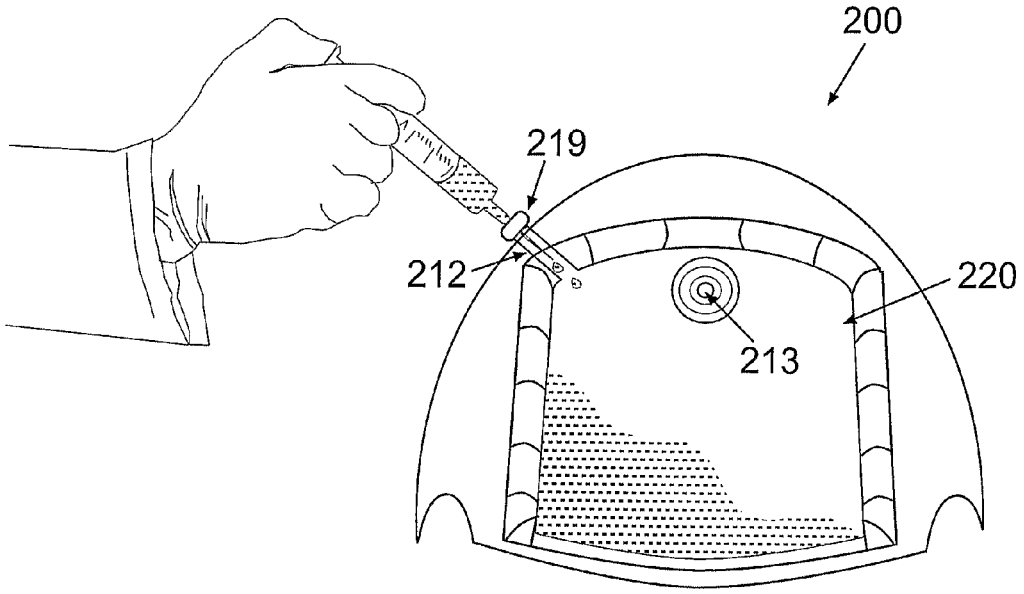

Fig. 13c

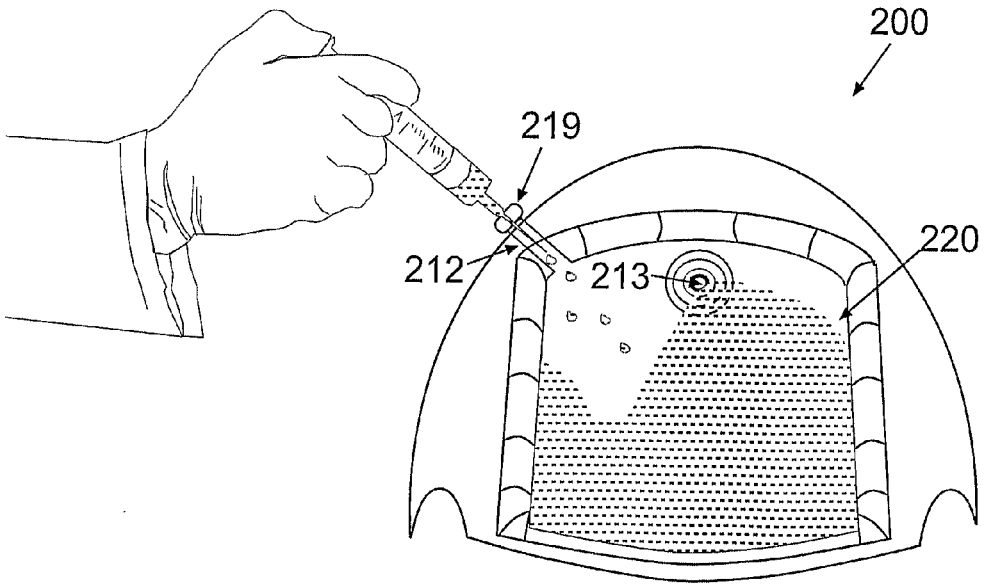

Fig. 13d

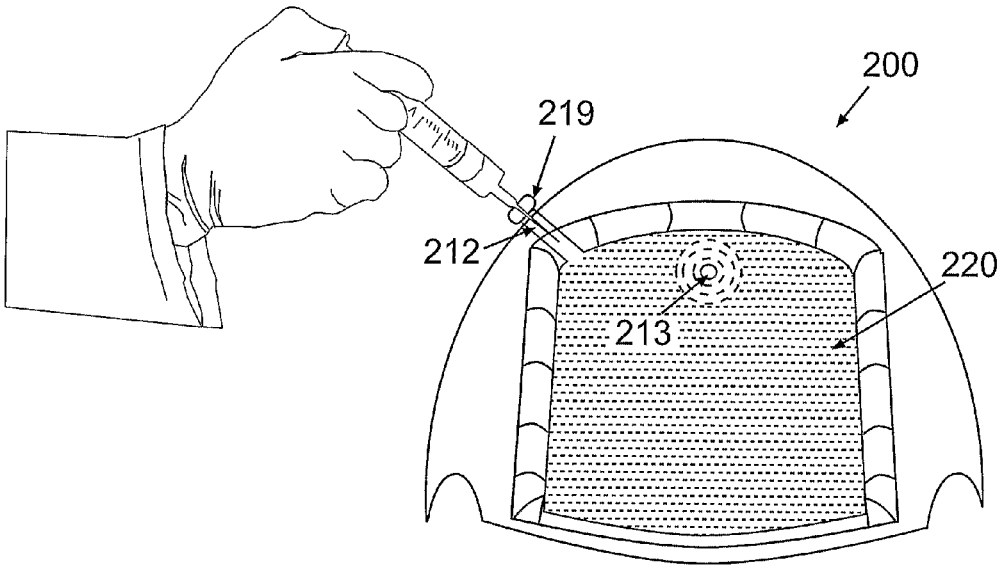

Fig. 13e

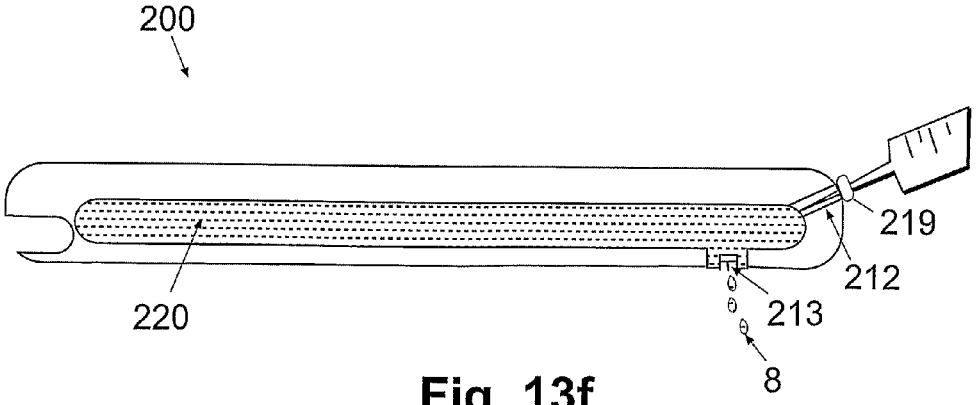

Fig. 13f

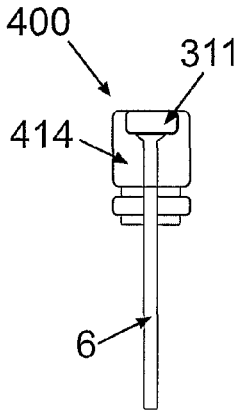

Fig. 14a

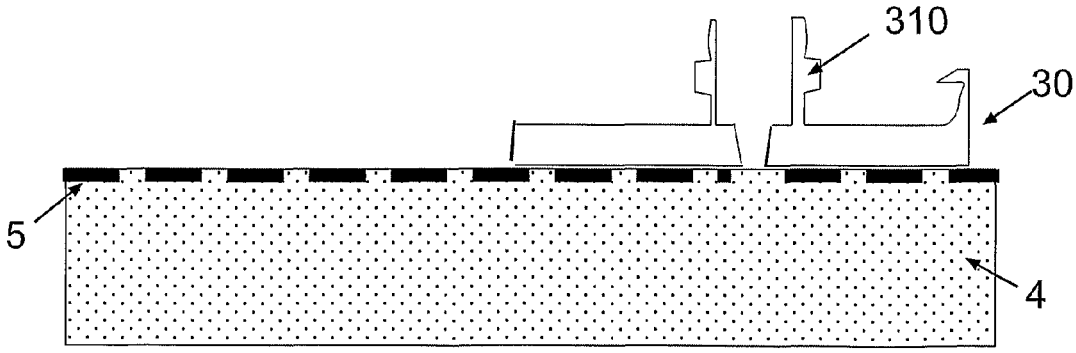

Fig. 14b

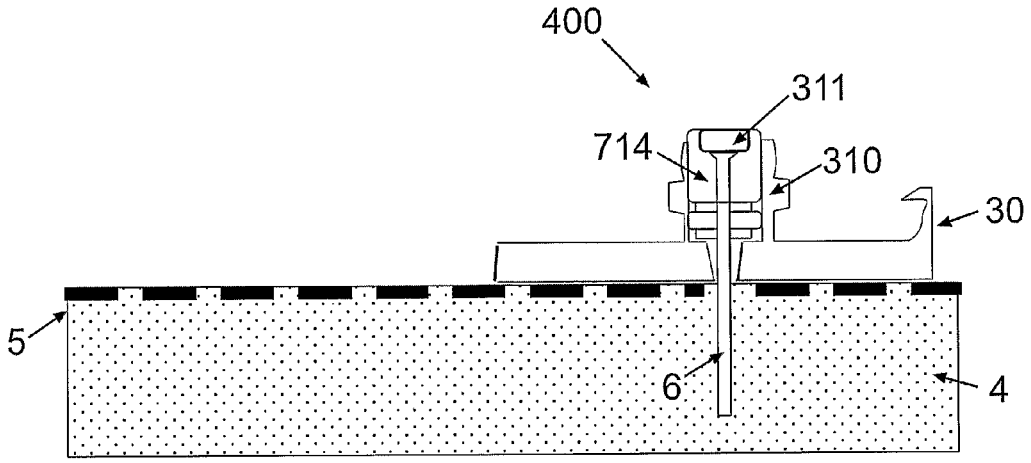

Fig. 14c

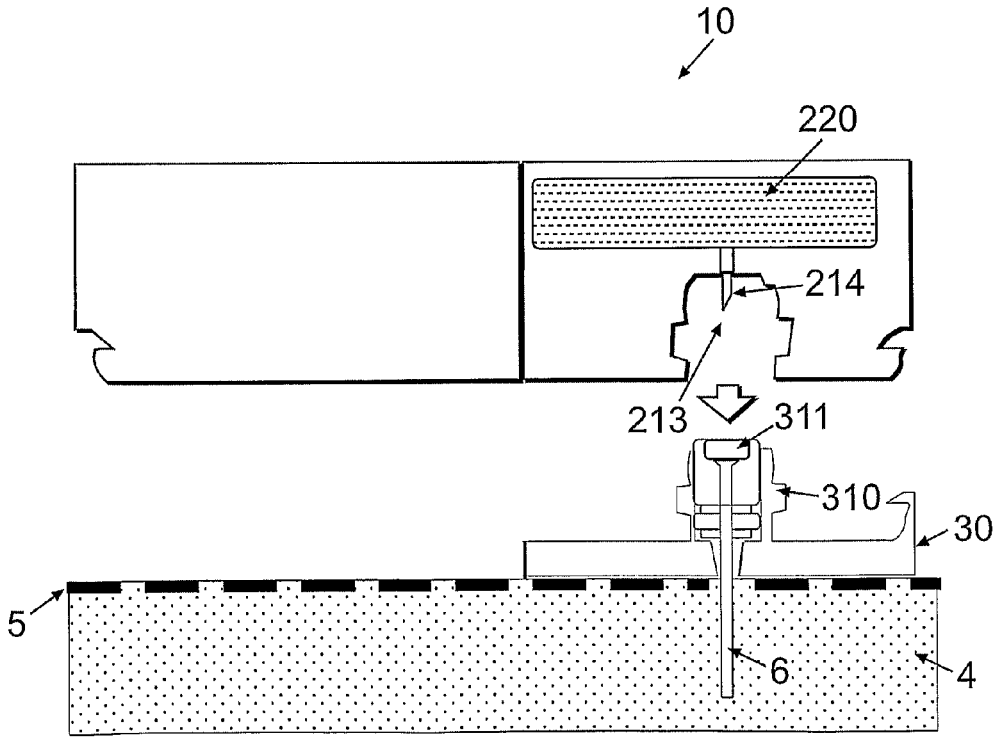

Fig. 15a

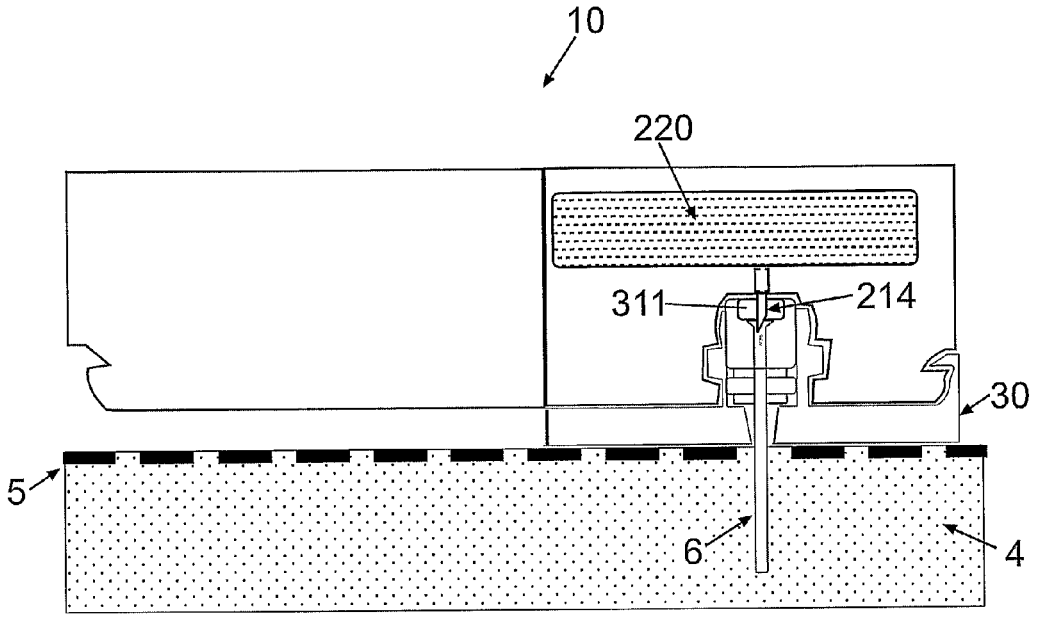

Fig. 15b

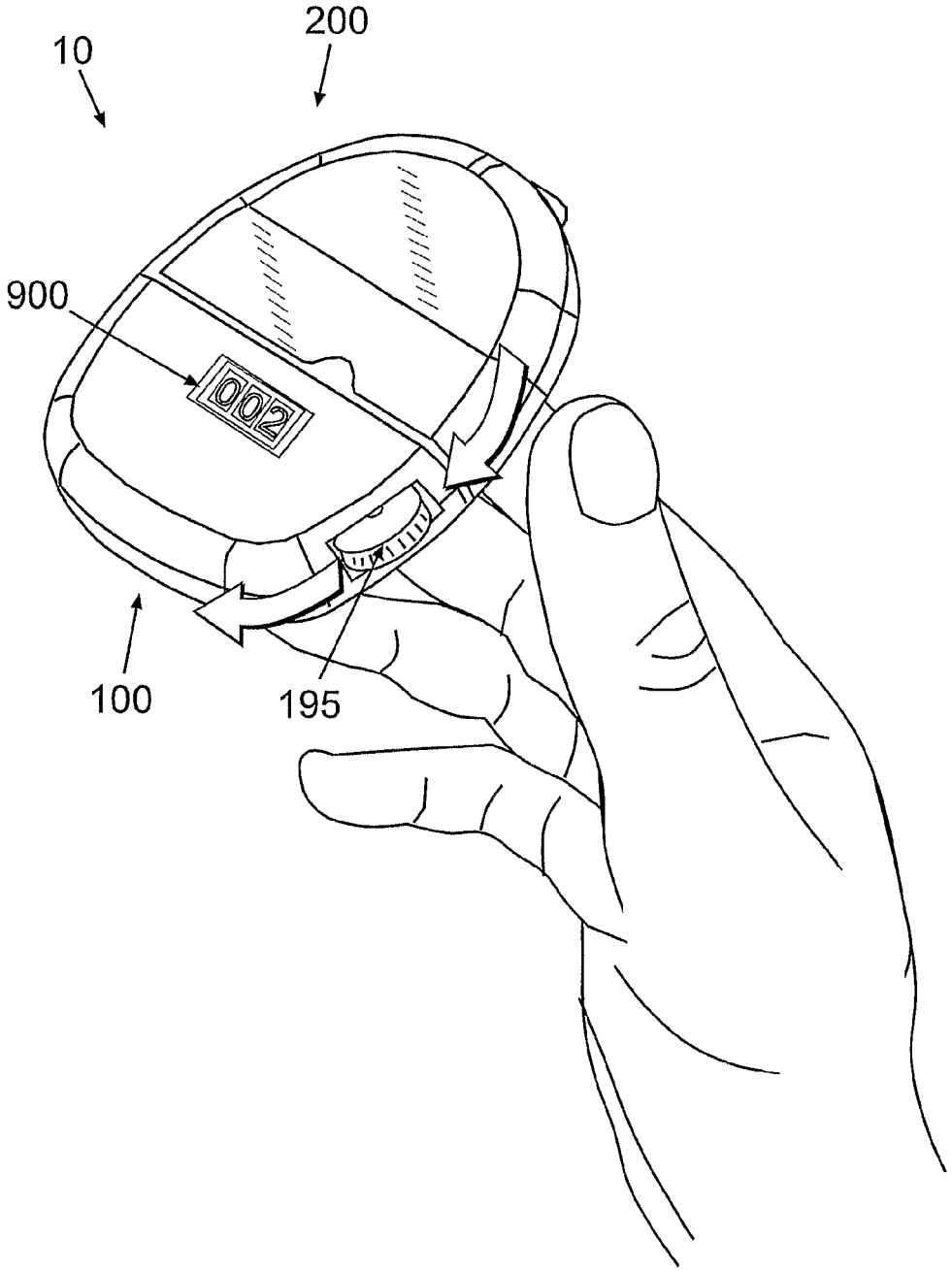

Fig. 16

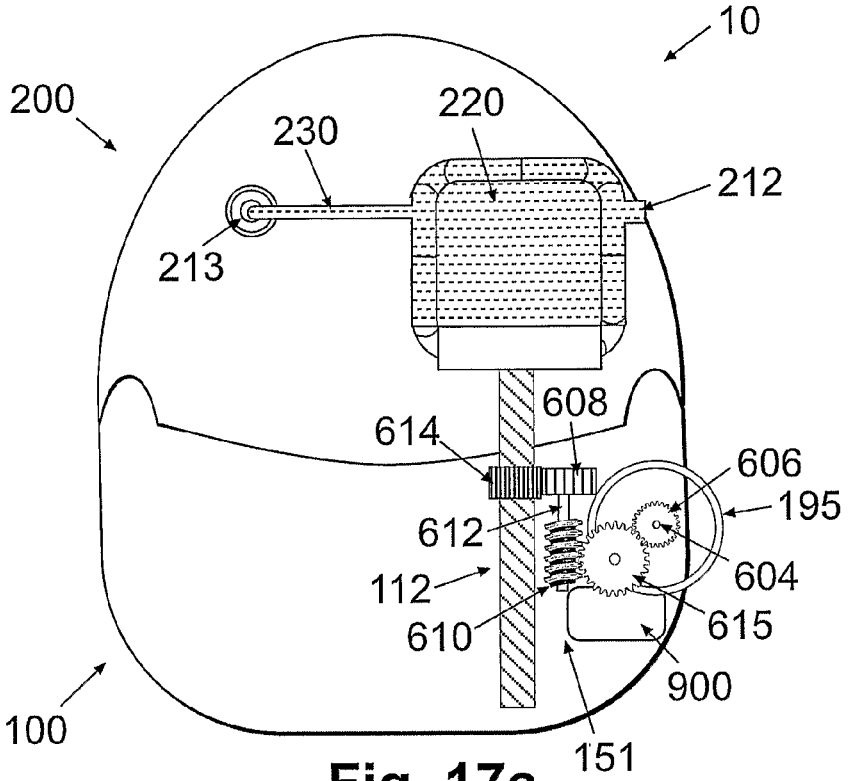

Fig. 17a

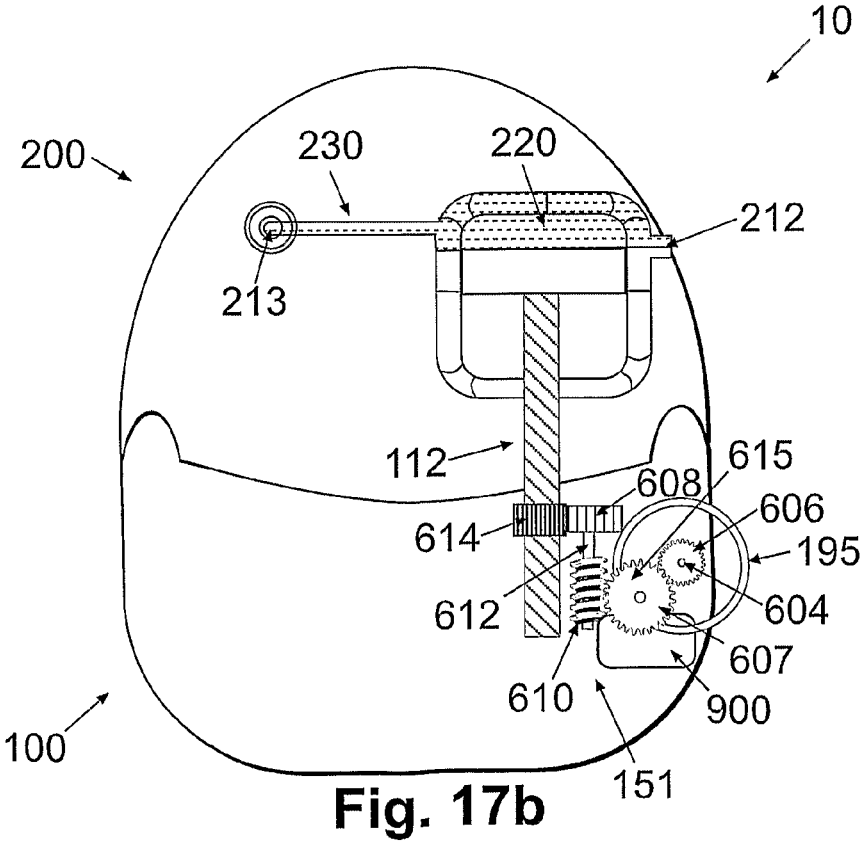

Fig. 17b

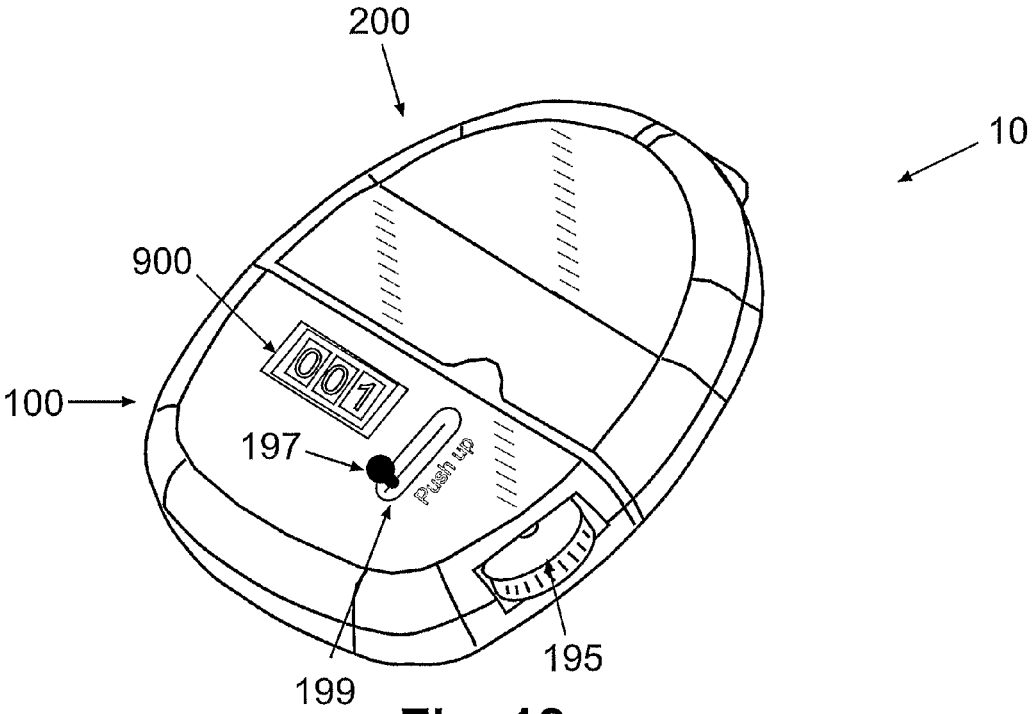

Fig. 18

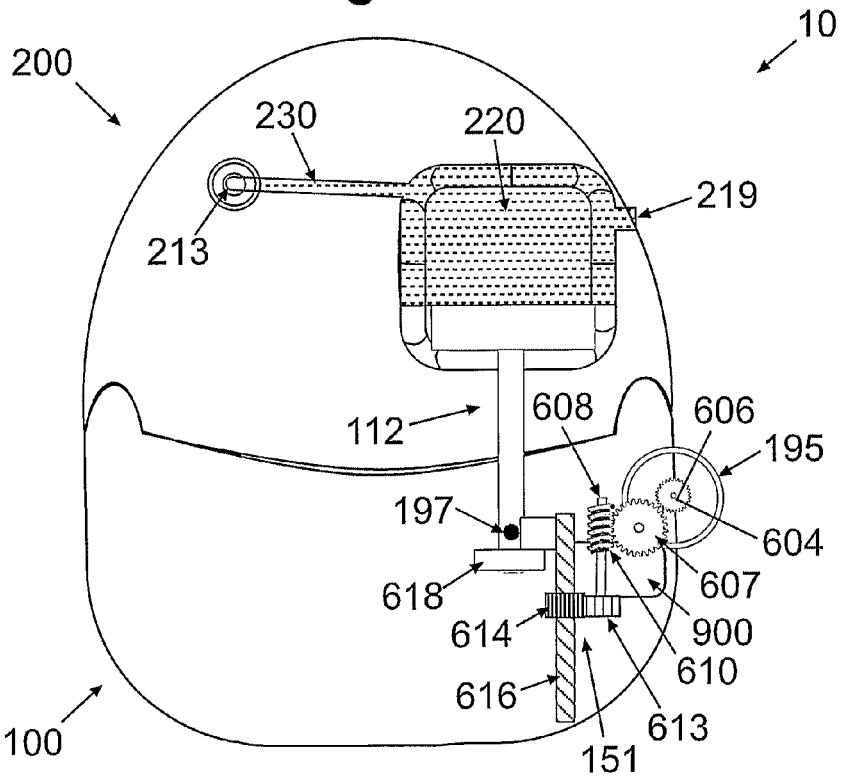

Fig. 19a

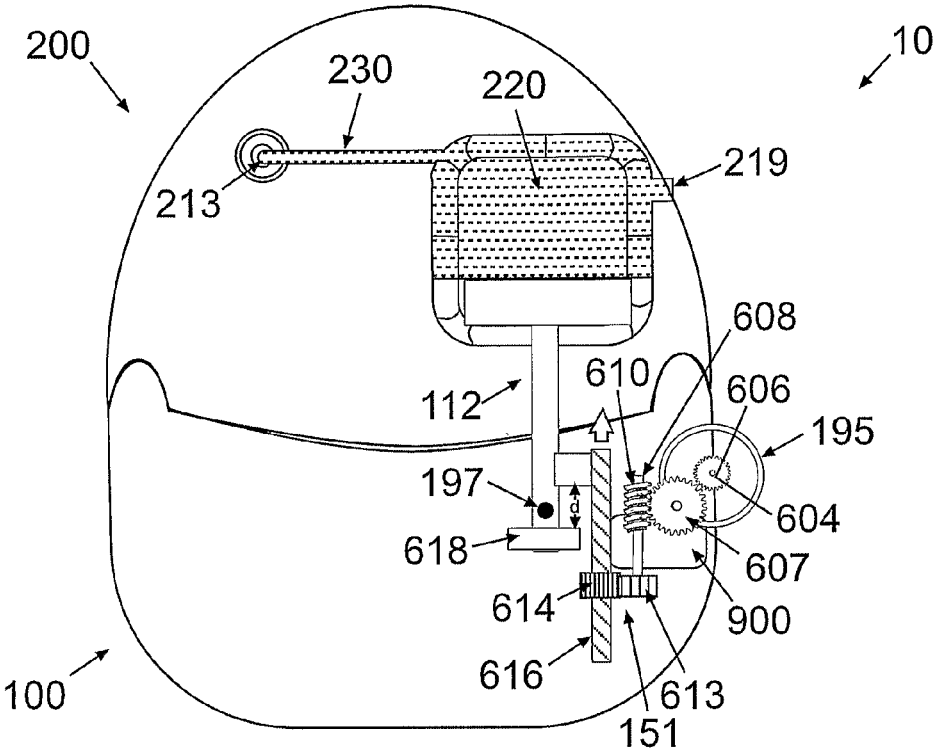

Fig. 19b

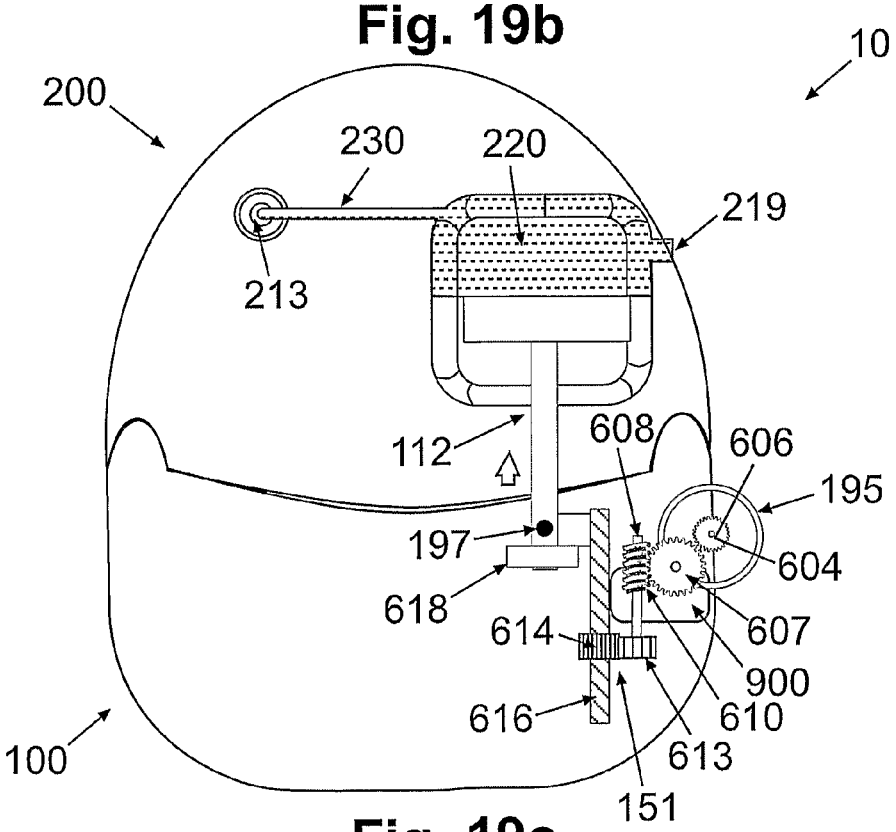

Fig. 19c

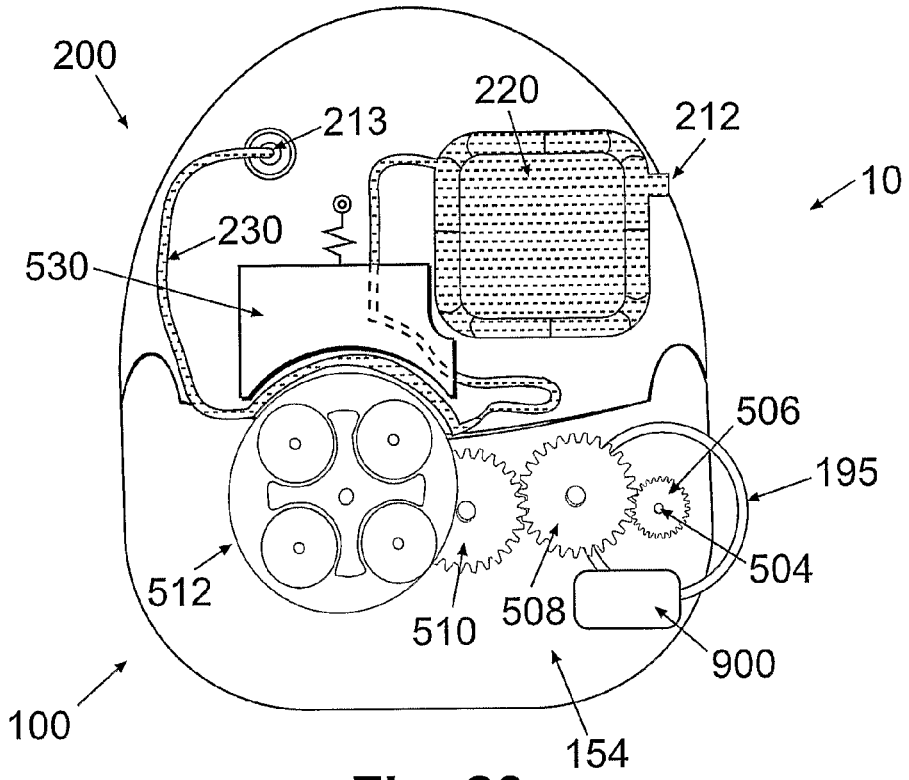

Fig. 20

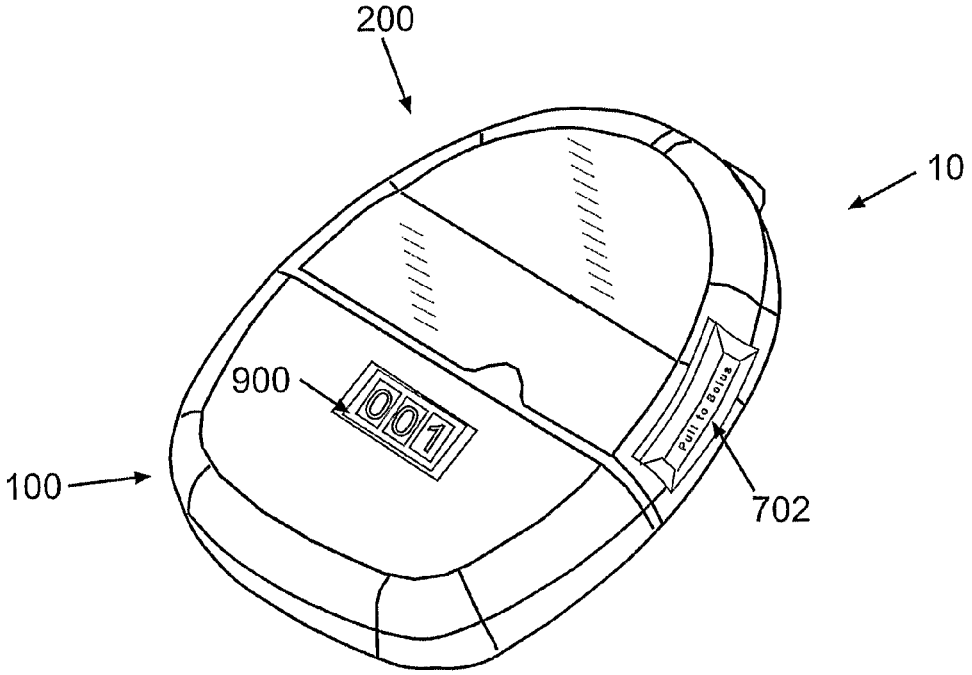

Fig. 21a

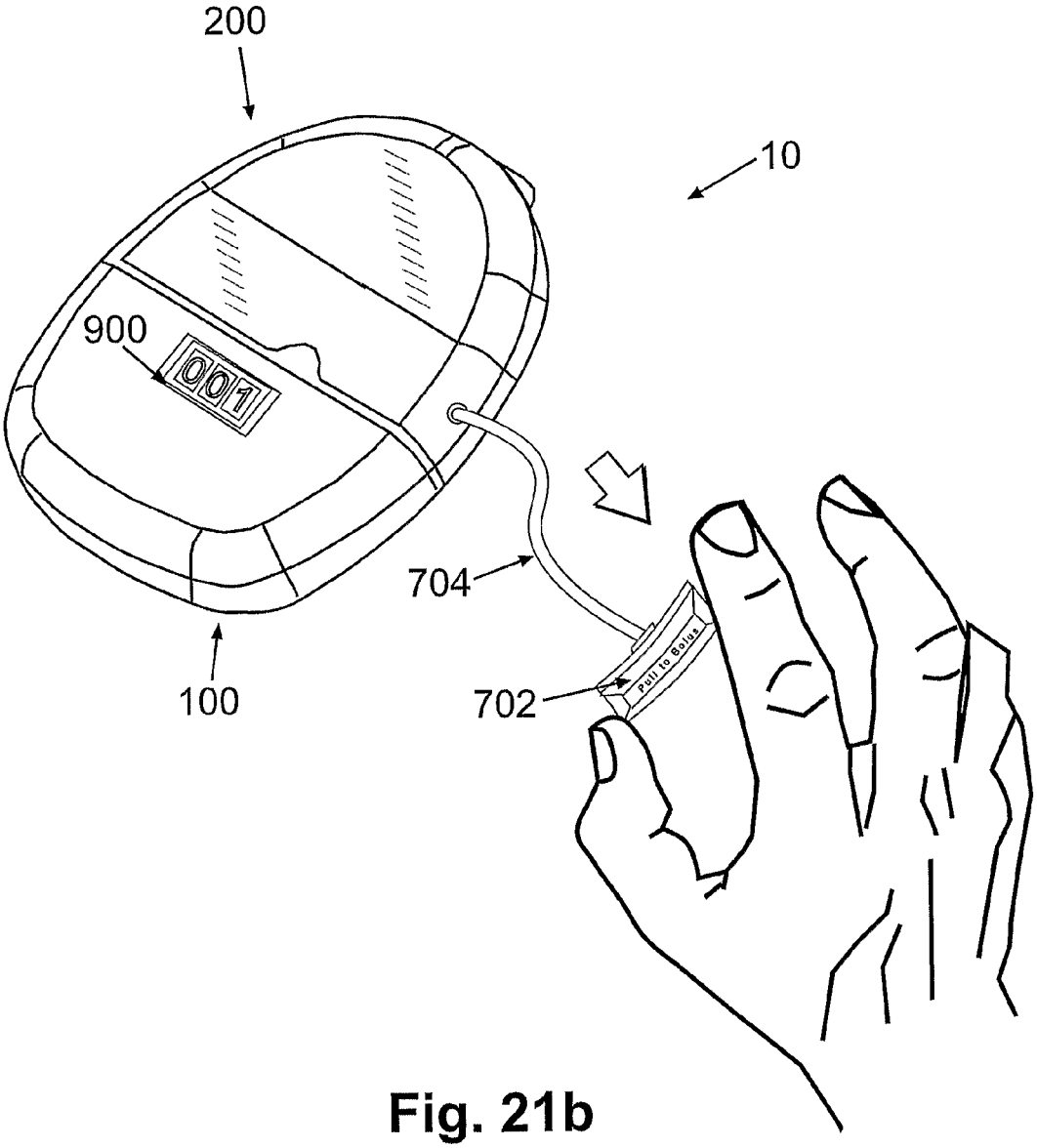

Fig. 21b

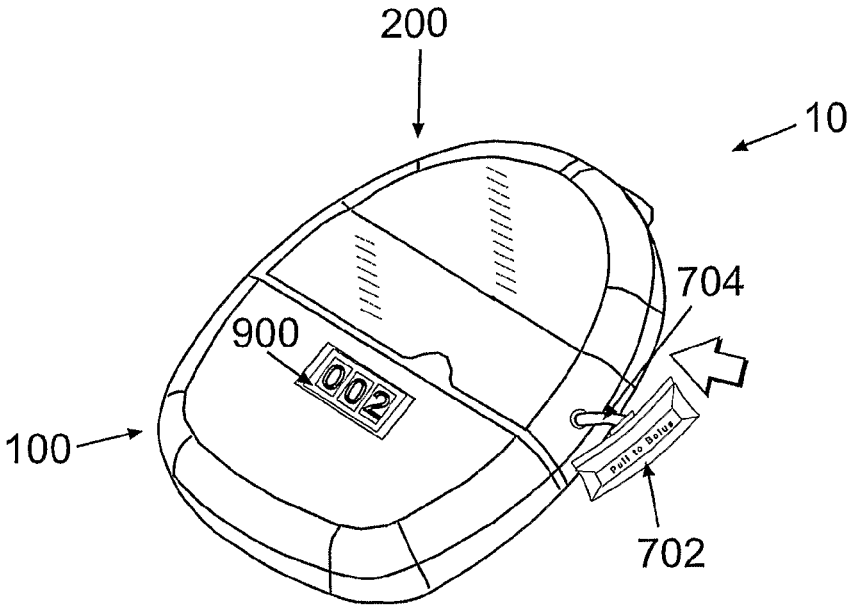

Fig. 21c

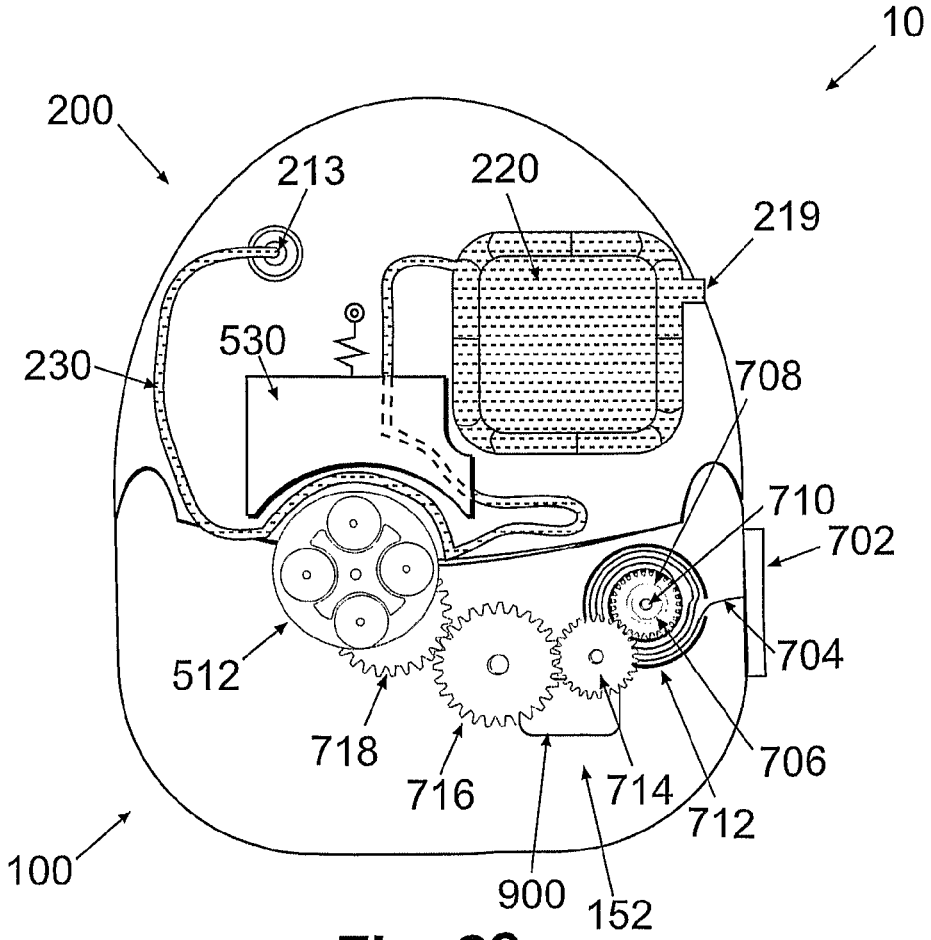

Fig. 22

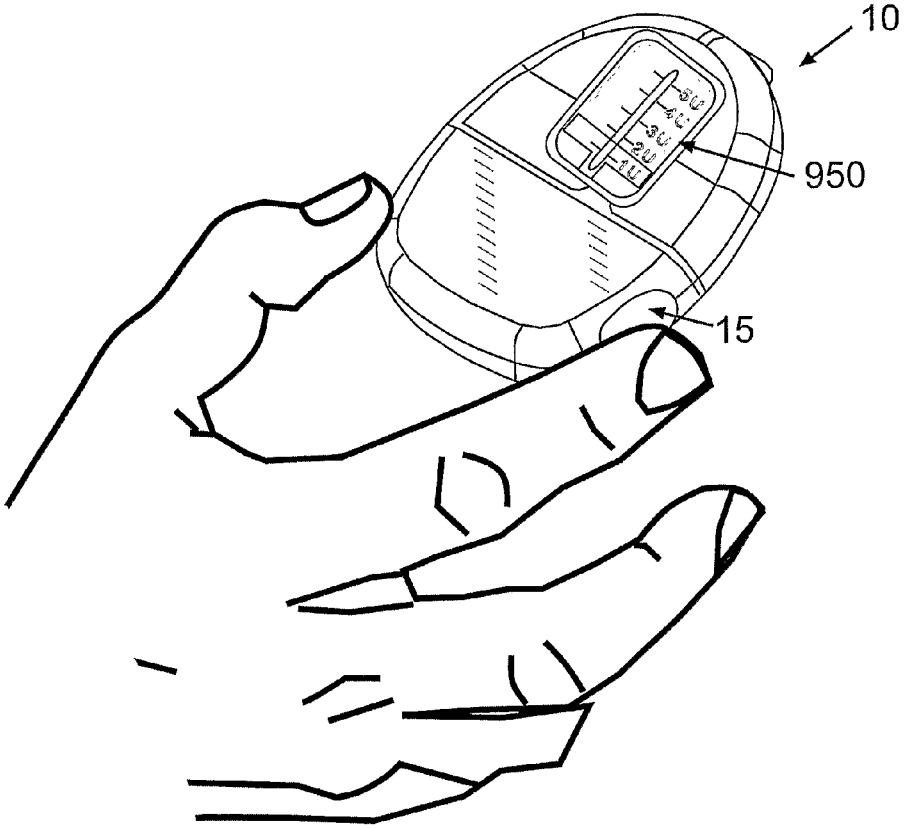

Fig. 23a

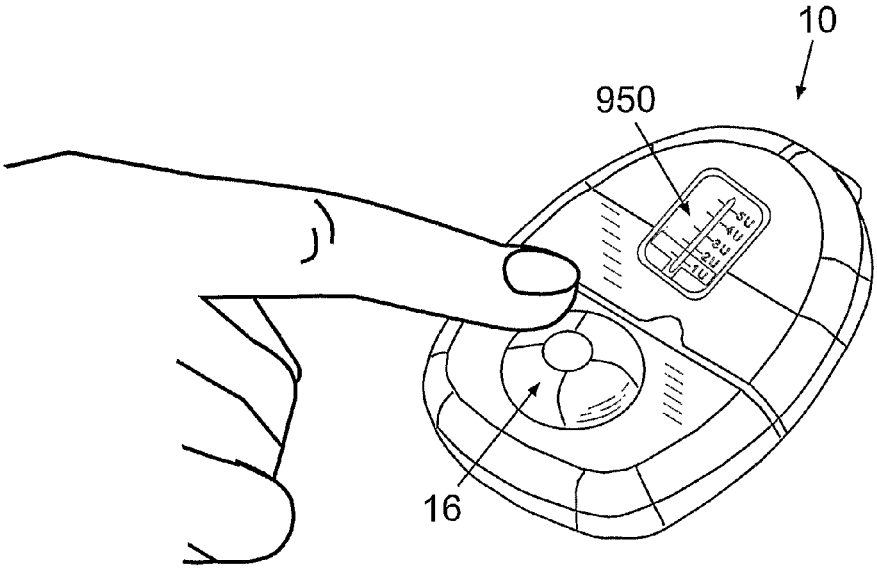

Fig. 23b

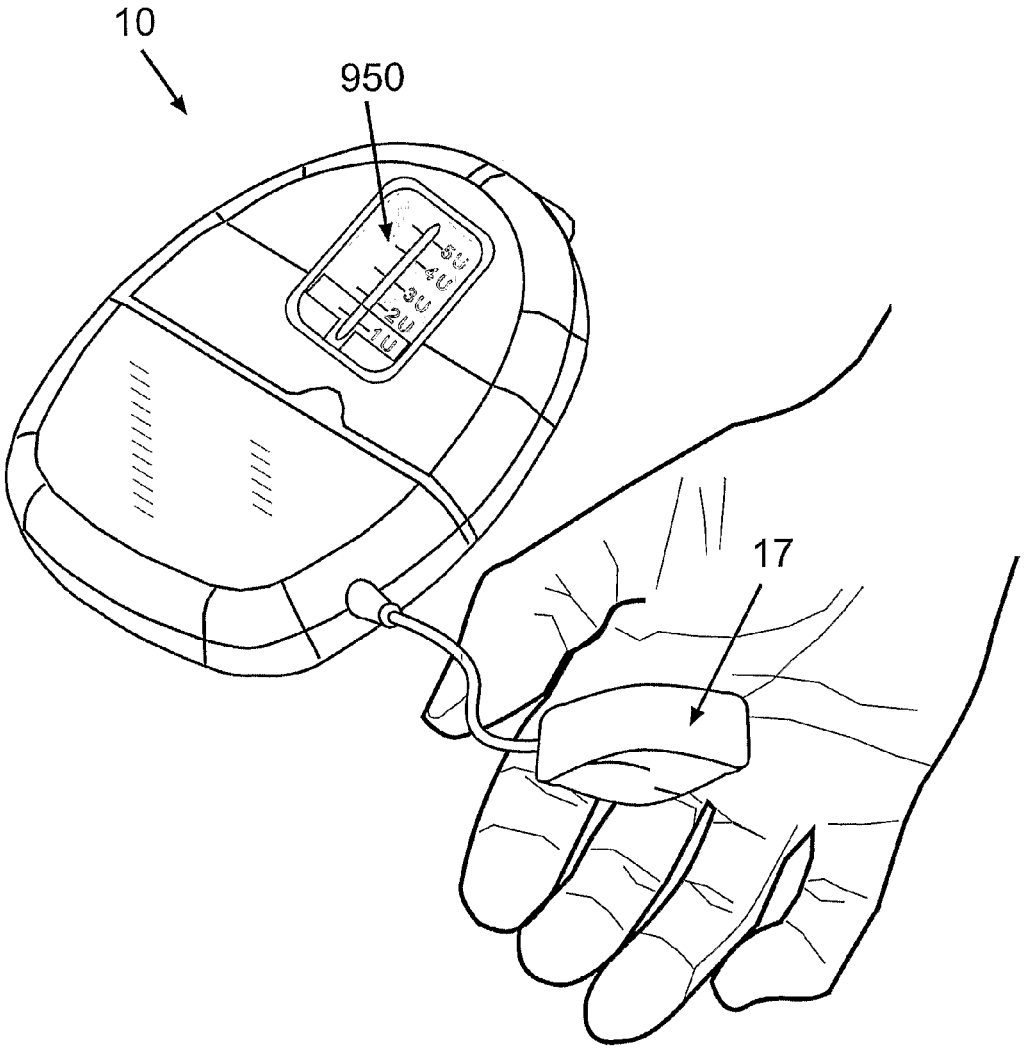

Fig. 23c

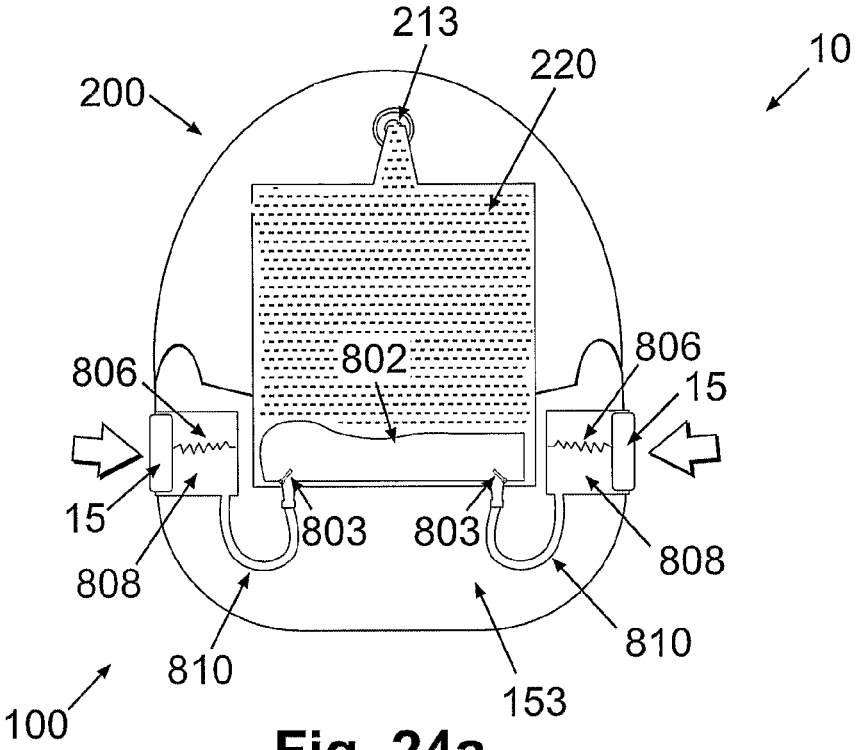

Fig. 24a

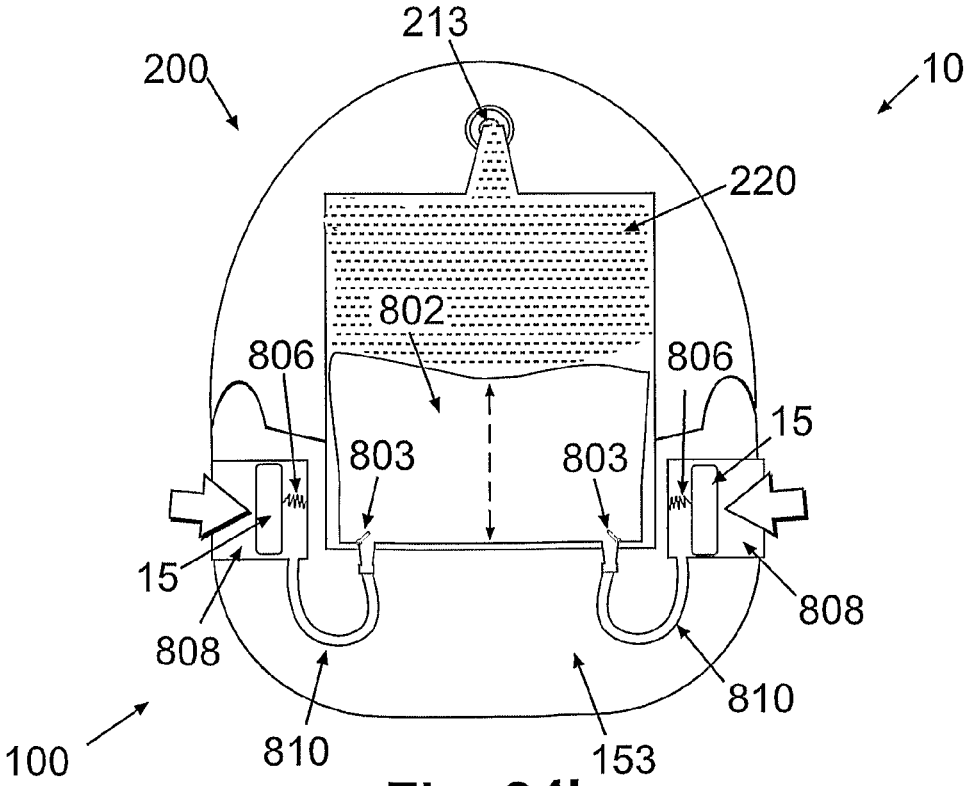

Fig. 24b

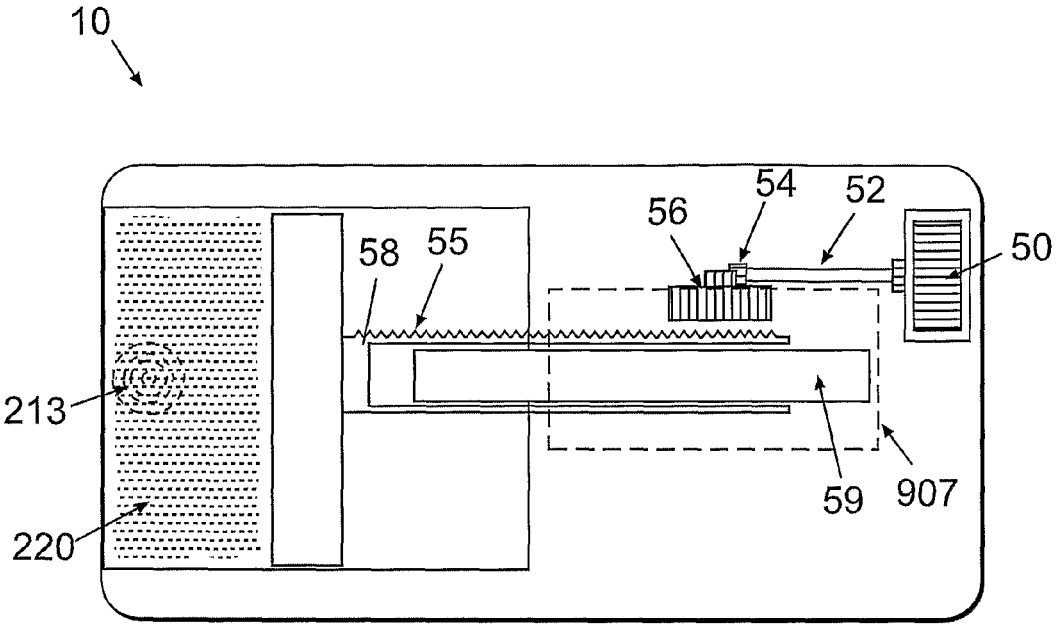

Fig. 25a

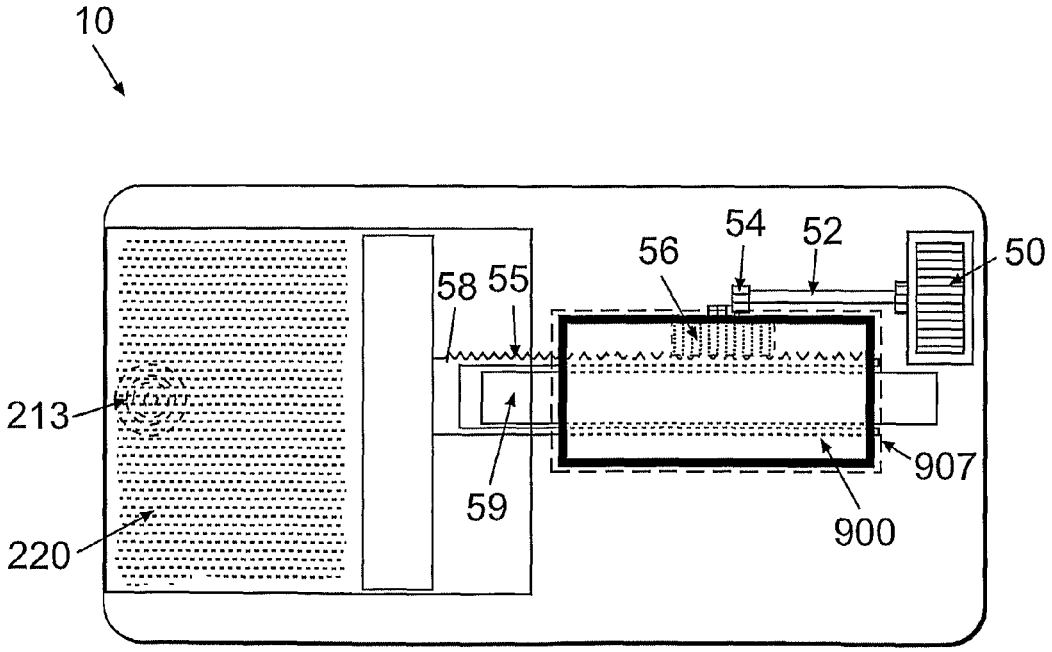

Fig. 25b

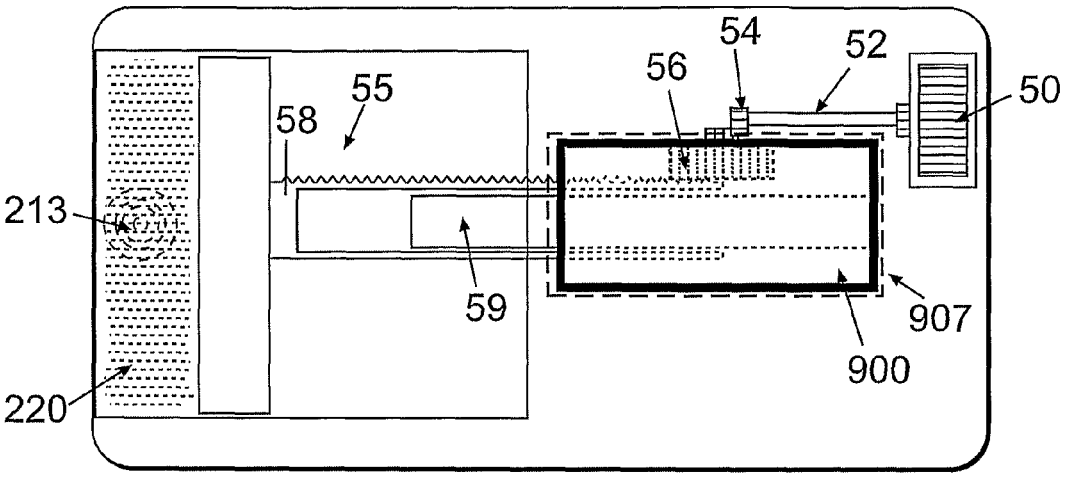

Fig. 25c

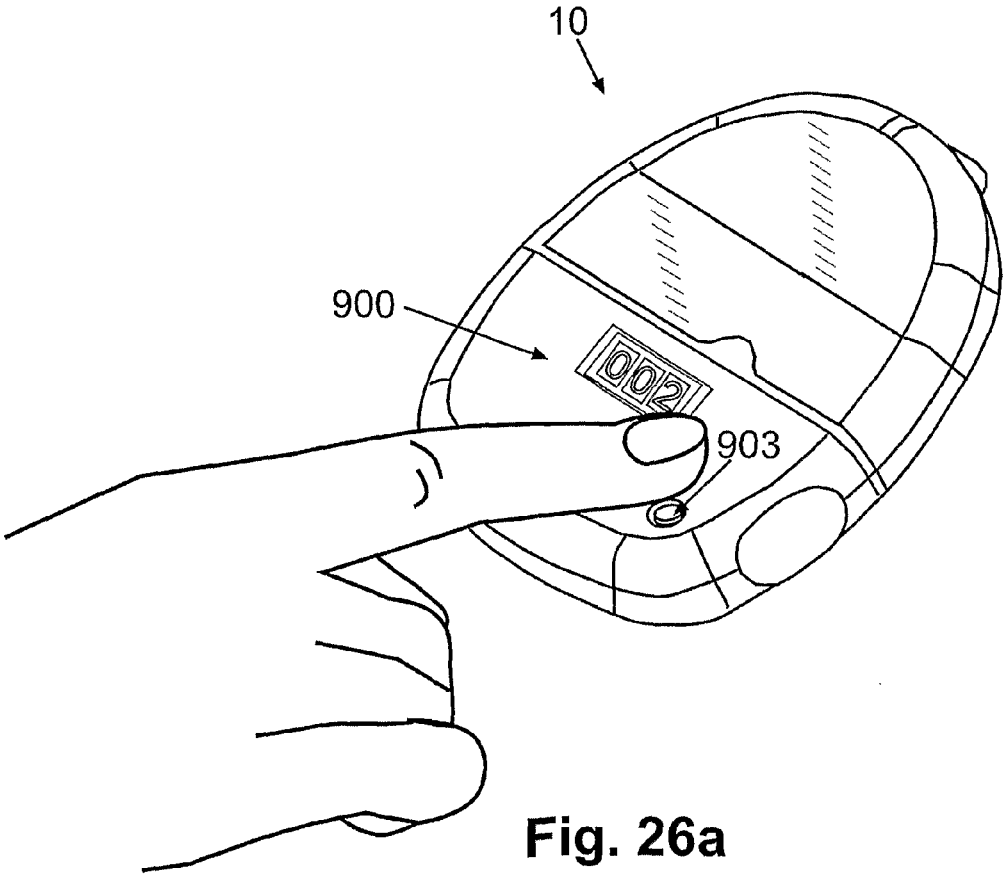

Fig. 26a

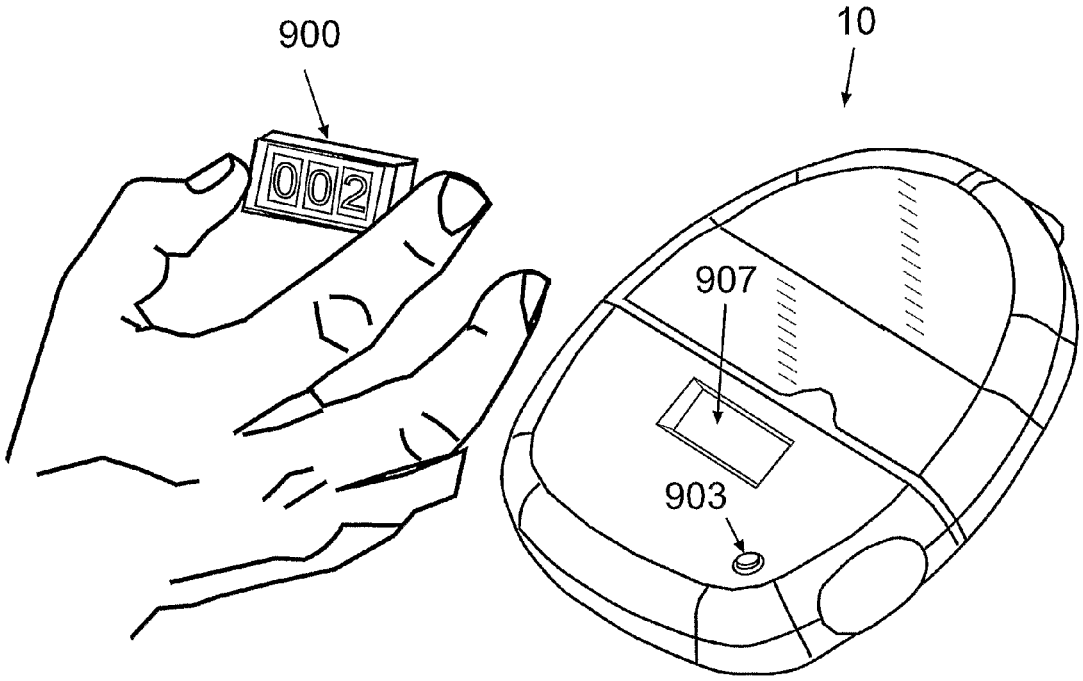

Fig. 26b

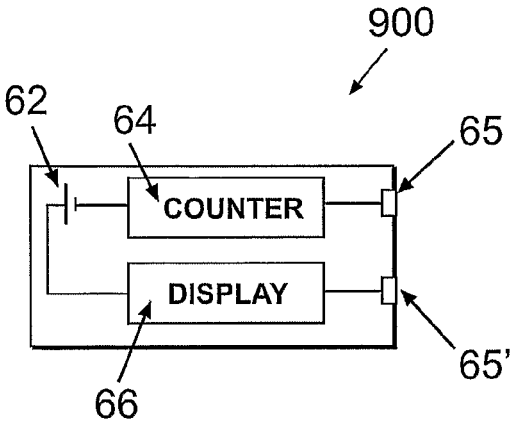

Fig. 27a

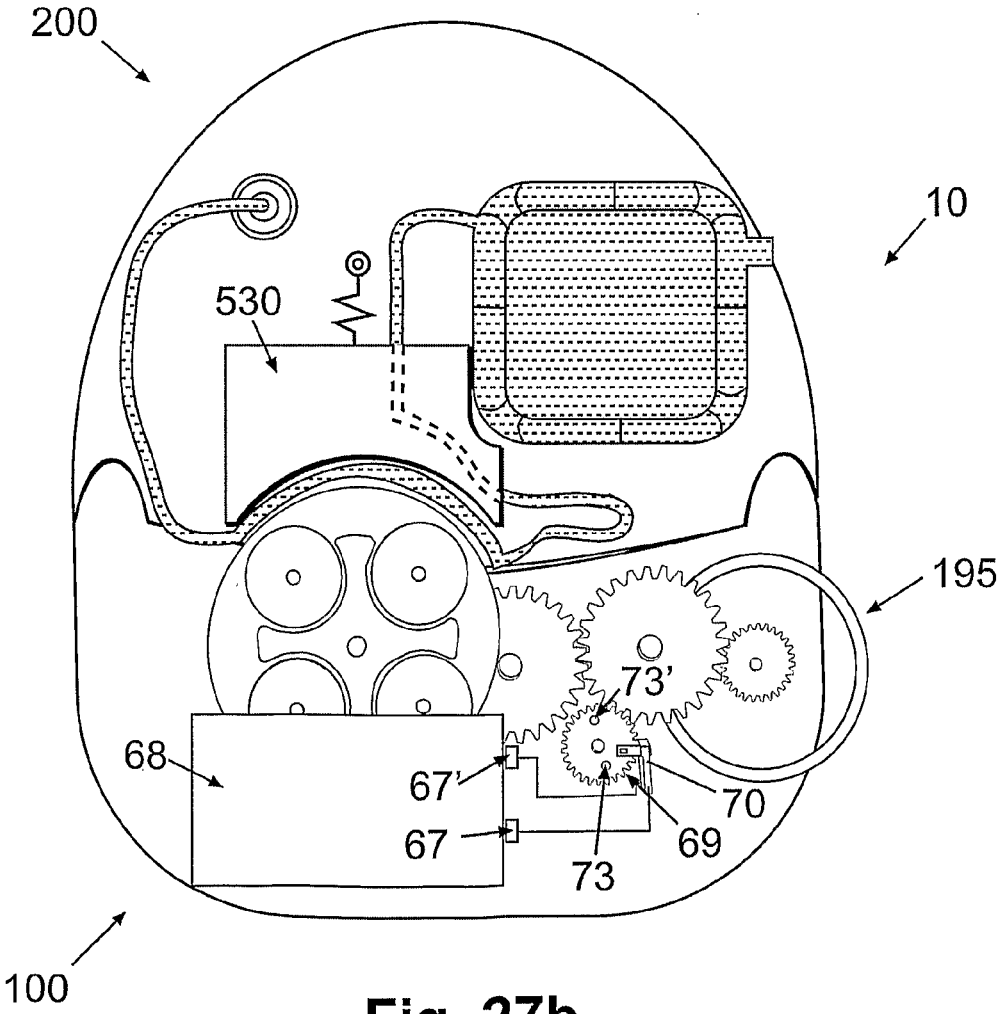

Fig. 27b

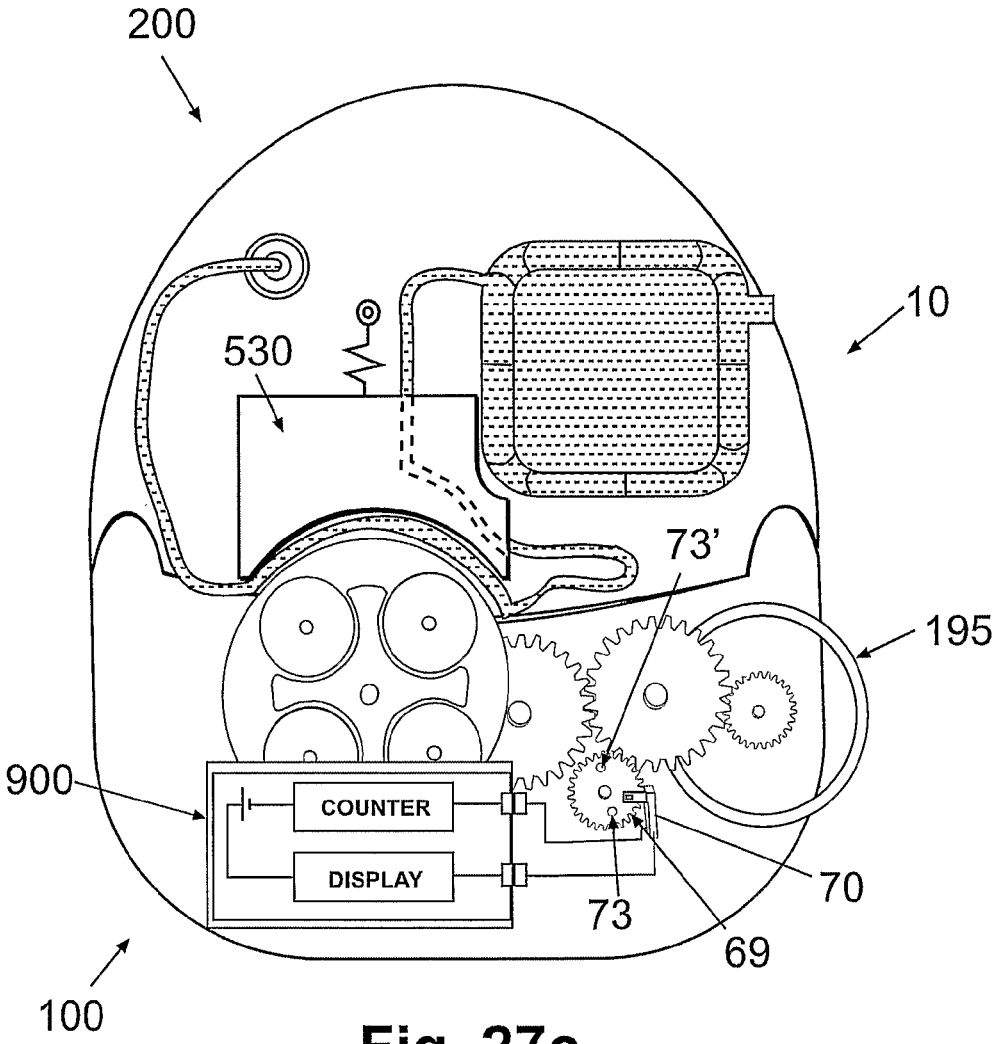

Fig. 27c

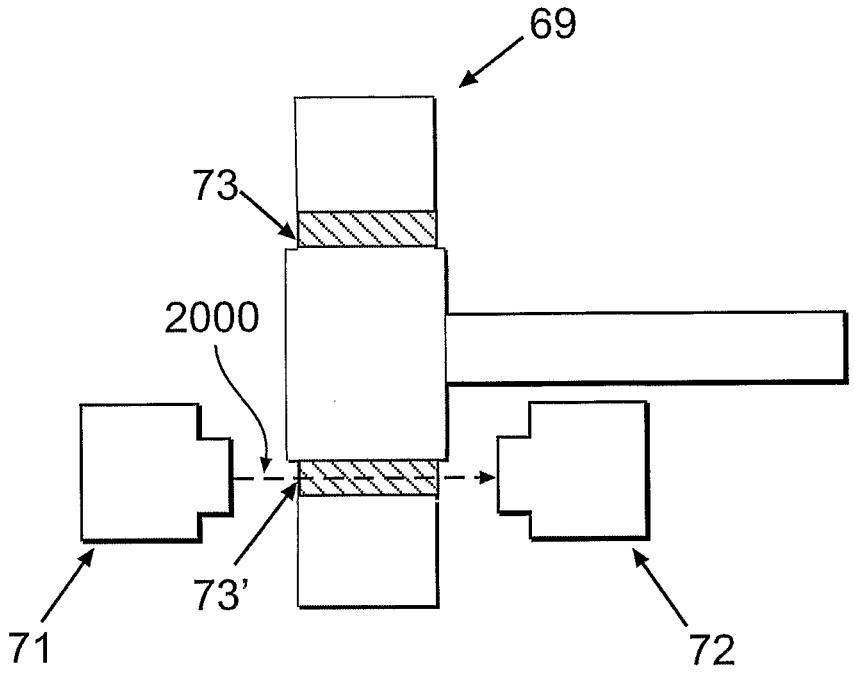

Fig.28a

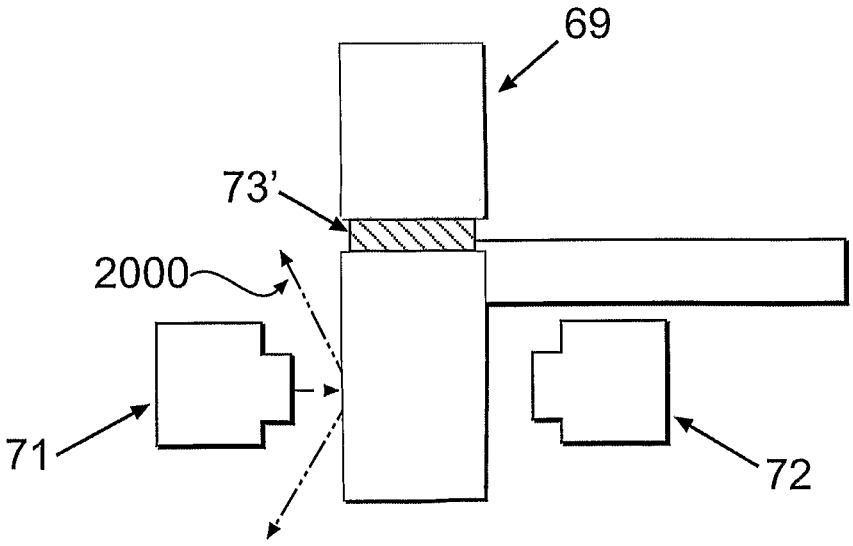

Fig.28b

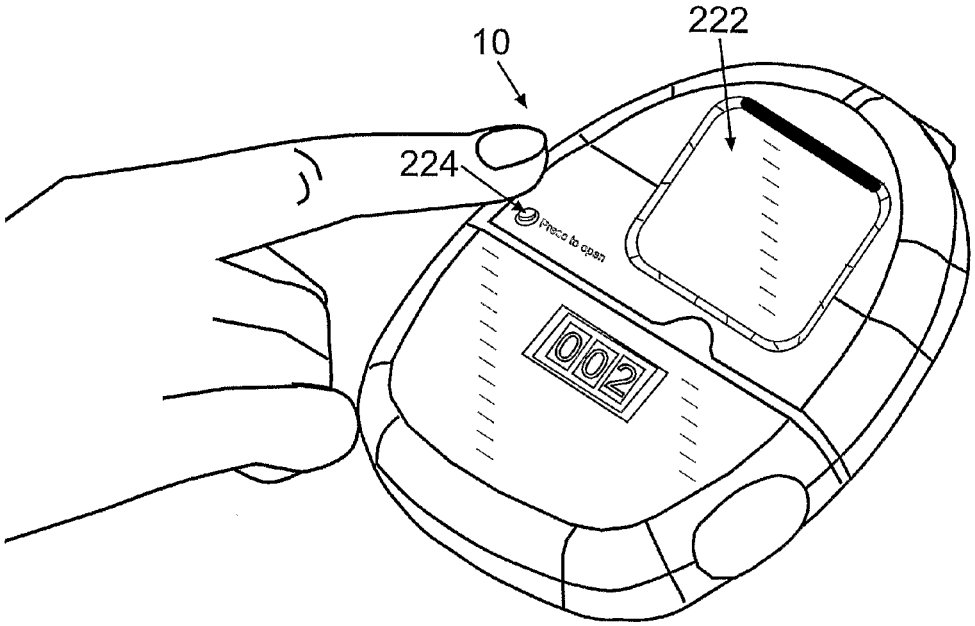

Fig. 29a

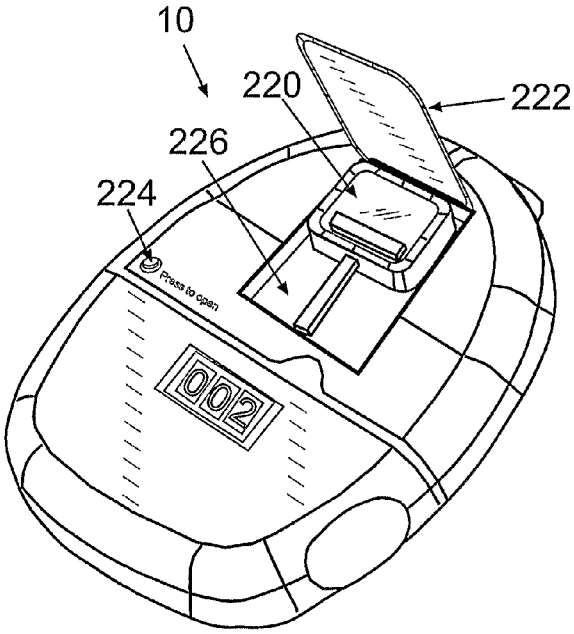

Fig. 29b

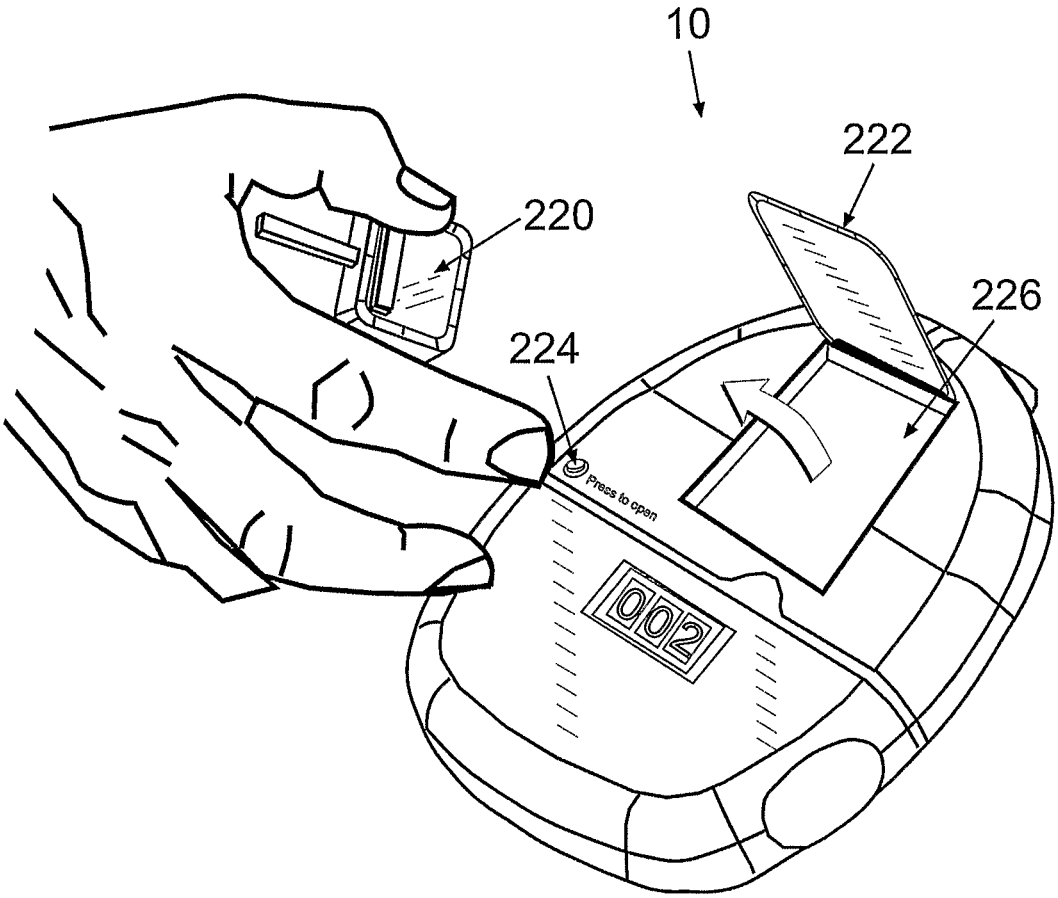

Fig. 29c

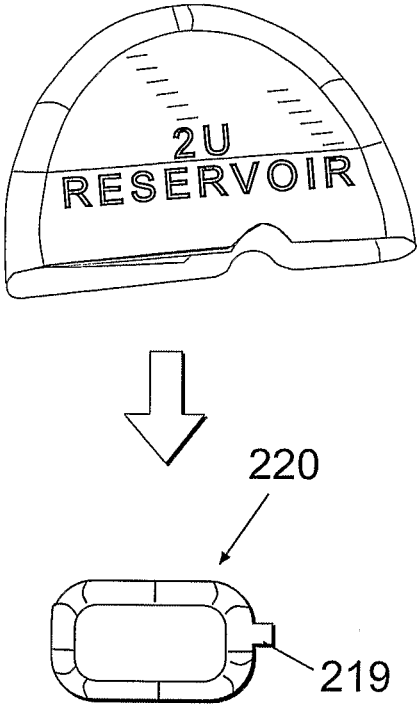

Fig. 30a

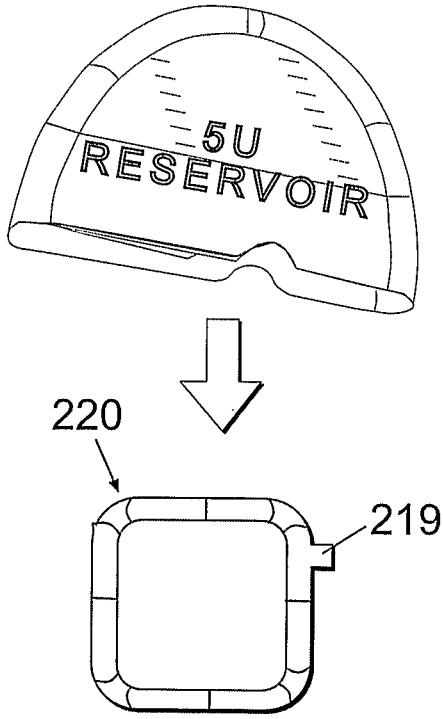

Fig. 30b

DEVICE FOR DRUG DELIVERY

CROSS-REFERENCE TO RELATED APPLICATIONS

The present application is a continuation of U.S. Pat. No. 8,465,460 issued on 18 Jun. 2013 (application Ser. No. 12/1733,009, filed on 20 Apr. 2010), which is a 35 U.S.C. §371 national stage entry of PCT/IL2008/001058, which has an international filing date of 31 Jul. 2008 and claims priority to U.S. Provisional Patent Application No. 60/963,071, filed on 1 Aug. 2007 and U.S. Provisional Patent Application No. 61/003,169, filed on 14 Nov. 2007. The present application incorporates herein by reference the contents of each of the above-referenced applications in their entireties.

FIELD OF THE INVENTION

The present disclosure generally relates to a device for medical infusion of fluids (e.g., drugs). In particular, the disclosure relates to a portable infusion device for delivery of an injectable therapeutic fluid. Even more particularly, the disclosure relates to a portable, manually-powered, skin-securable, injectable drug dispensing device.

BACKGROUND OF THE INVENTION

External Infusion Pump

An external infusion pump may be medically necessary for the administration of various medications, intravenously or subcutaneously. Such external infusion devices are used when parenteral administration of the drug at home is reasonable and/or necessary, when it is required that an infusion pump safely administers the drug, and/or when the drug is administered by a prolonged infusion (e.g., during at least 8 hours) because of proven clinical efficacy.

External infusion pumps ("EIP") can be used, particularly in a non-hospital setting, to administer antibiotics, chemotherapy, analgesics and opioids, total parenteral nutrition formulas, insulin, vasopressors, blood products, growth hormone, gonadotropin releasing hormone (GnRH), interferon γ, and other drugs or biologics for which delivery at a controlled rate of the fluid is desirable or necessary. Functional EIP infusion rates range from high volume delivery rates (400 mL/h) for hydration therapy to very low flow rates (0.04 mL/h) that can be used for delivery chemotherapeutic agents.

Diabetes and Glycemic Control

The term Diabetes mellitus ("DM") refers to a group of common metabolic disorders that share the phenotype of hyperglycemia. Several distinct types of DM exist and are caused by complex interaction of genetics, environmental factors, and life-style. The metabolic dysregulation associated with all types of DM, especially when glucose levels are uncontrolled, causes secondary pathophysiologic changes in multiple organ systems that impose a tremendous burden on the individual with diabetes and on the health care system. In the United States, DM is the leading cause of end-stage renal disease (ESRD), nontraumatic lower extremity amputations, and adult blindness. With an increasing incidence worldwide, DM will be a leading cause of morbidity and mortality for the foreseeable future.

The two broad categories of DM are designated type 1 and type 2. Generally speaking, type 1 DM results from autoimmune beta cell destruction, whereas type 2 DM is a heterogeneous group of disorders characterized by variable degrees of insulin resistance, impaired insulin secretion, and increased glucose production.

Type 1 DM

Type 1 DM develops as a result of the synergistic effects of genetic, environmental, and immunologic factors that ultimately destroy the pancreatic beta cells. Individuals with a genetic susceptibility have normal beta cell mass at birth but begin to lose beta cells secondary to autoimmune destruction that occurs over months to years. As beta cell mass begins to decline, insulin secretion becomes progressively impaired. Features of diabetes generally do not become evident until a majority of beta cells are destroyed (~80%).

Because individuals with type 1 DM lack endogenous insulin production, administration of basal, exogenous insulin is essential for regulating glycogen breakdown, gluconeogenesis, lipolysis, and ketogenesis. Likewise, insulin replacement for meals should be appropriate for the carbohydrate intake and promote normal glucose utilization and storage. A goal of intensive diabetes management is to achieve euglycemia or near-normal glycemia. This approach requires insulin regimen that matches glucose intake and insulin dose. Insulin regimens usually include multiple-component insulin regimens, multiple daily injections (MDI), or insulin infusion devices (Harrison's principles of internal medicine, 16th edition, chapter 323).

The benefits of intensive diabetes management and improved glycemic control has been shown in the Diabetes Control and Complications Trial (DCCT) that demonstrated that development and progression of the chronic complications of diabetes are greatly related to the degree of altered glycemia as quantified by determinations of glycohemoglobin (HbA1c). [DCCT Trial, N. Engl. J. Med, 1993; 329: 977-986, UKPDS Trial, Lancet 1998; 352: 837-853. BMJ 1998; 317, (7160): 703-13 and the EDIC Trial, N. Engl. S. Med. 2005; 353, (25): 2643-53].

In all MDI regimens, intermediate—or long-acting insulins (e.g., NPH, lente, ultralente, or glargine insulin) supply basal insulin, whereas short acting insulin (e., regular, insulin aspart, or lispro insulin) provides prandial insulin. Lispro and insulin aspart should be injected just before or just after a meal; regular insulin dosages are given 30 to 45 min prior to a meal. No insulin MDI regimen reproduces the precise insulin secretory pattern of the pancreatic islet. However, the most physiologic regimens entail more frequent insulin injections, greater reliance on short-acting insulin, and more frequent capillary plasma glucose measurements (Harrison's Principles of Internal Medicine, 16th edition, chapter 323).

In recent years, ambulatory portable insulin infusion pumps have emerged as a superior alternative to multiple daily injections of insulin. These pumps, which deliver insulin at a continuous or periodic basal rate, as well as in bolus volumes, were developed to liberate patients from repeated self-administered injections, and allow greater flexibility in dose administration. The insulin infused via the insulin pump is usually a short acting insulin (e.g., insulin aspart, lispro insulin).

Currently, about 80% of Type 1 DM patients are managed with MDI, whereas only about 20% are managed with insulin pumps.

Type 2 DM

Type 2 DM is characterized by impaired insulin secretion, peripheral insulin resistance, and excessive hepatic glucose production. Obesity, particularly visceral or central is very common in type 2 DM.

Insulin resistance can be defined as a decreased ability of insulin to act effectively on peripheral target tissues (especially muscle and liver). In the early stages of the disorder, glucose tolerance remains normal, despite insulin resistance, because the pancreatic beta cells compensate by increasing

insulin output. As insulin resistance and compensatory hyperinsulinemia progress, the pancreatic islets are unable to sustain the hyperinsulinemic state. Impaired Glucose Tolerance (IGT), characterized by elevations in postprandial glucose, then develops. A further decline in insulin secretion and an increase in hepatic glucose production may lead to overt diabetes with fasting hyperglycemia. Ultimately, beta cell failure may ensue.

Increased hepatic glucose production in Type 2 DM may be due to the failure of hyperinsulinemia to suppress gluconeogenesis in the liver as a result of the insulin resistance. Type 2 DM management can begin with medical nutritional therapy ("MNT") and increased physical activity. If not sufficient to achieve glycemic control, pharmacologic therapy is indicated. Pharmacologic approaches to the management of type 2 DM include the administration of both oral glucose-lowering agents and insulin. Usually oral drugs are initiated first.

Several types of oral glucose-lowering agents that target different pathophysiologic processes in Type 2 DM exist. These include agents that increase insulin secretion (e.g., sulfonylurea), reduce glucose production (e.g., metformin), decrease glucose absorption (e.g., acarbose) and/or increase insulin sensitivity (e.g., pioglitazone).

Insulin Therapy can be considered as the initial therapy in situations involving, for example, lean individuals or individual experiencing severe weight loss, situations involving individuals with underlying renal or hepatic disease that precludes oral glucose-lowering agents, or in situations involving individuals who are hospitalized or acutely ill. Insulin therapy is ultimately required by a substantial number of individuals with Type 2 DM because of the progressive nature of the disorder and the relative insulin deficiency that develops in patients with long-standing diabetes. (Harrison's Principles of Internal Medicine, 16th edition, chapter 323).

The United Kingdom Prospective Diabetes Study (UKPDS), one of the largest and longest trial ever conducted in patients with type 2 diabetes, found that for each 1% reduction in hemoglobin A1C, there was a significant decrease in diabetic complications. (BMJ 1995; 310(6972): 83-8). A decline in MC was best achieved by early exogenous insulin therapy.

Despite the increased risk of mild hypoglycemia, aggressive therapy that combines patient education and self-management with a form of exogenous insulin that closely mimics normal insulin secretion can help to reduce the morbidity and mortality associated with type 2 diabetes. (Clinical Diabetes 2003; 21:14-21).

Pramlintide Acetate (Symlin)

Amylin is a second β-cell hormone that is co-localized and co-secreted with insulin in response to meals. Consequently, β-cell dysfunction in insulin-requiring subjects with type 1 or type 2 diabetes is characterized by a markedly impaired postprandial secretory response of both insulin and amylin. Amylin acts as a neuroendocrine hormone that complements the effects of insulin in postprandial glucose regulation through several centrally mediated effects. These include a suppression of postprandial glucagon secretion and a vagus-mediated regulation of gastric emptying, thereby helping to control the influx of endogenous and exogenous glucose, respectively. Amylin has also been shown to reduce food intake and body weight, consistent with an additional satiety effect. Consistent with these findings, mealtime amylin replacement, as an adjunctive therapy to insulin, may improve metabolic control in diabetic subjects.

Pramlintide is a soluble, non-aggregating synthetic peptide analog of human amylin that has a potency at least equal to that of native amylin. Pramlintide in insulin-requiring subjects with diabetes has been shown, as an adjunct to insulin therapy, to correct postprandial hyperglucagonemia, slow the delivery of nutrients from the stomach to the small intestine, and, concomitantly, improve postprandial glucose excursions, (Diab, Tech. Therp. 2002; 4(1):51-61). Pramlintide is injected subcutaneously with a standard insulin syringe, rendering the dosage flexible.

Exentide

Incretins are gut-derived factors that increase glucose stimulated insulin secretion. Exentide (byetta) is an incretin mimetic that increases insulin secretion, increase beta cell growth/replication, slows gastric emptying, and may decrease food intake. Exentide is indicated as an adjunctive therapy to improve glycemic control in type 2 diabetic patients who are taking one or more of the following oral anti-diabetic drugs: Metformin, sulfonylurea, thiazolidinedione. Exentide is administered before a meal as a subcutaneous injection.

Insulin Pumps

Currently available insulin pumps, developed mainly for type 1 DM patients, deliver rapid acting insulin 24 hours-a-day through a catheter placed under the skin (i.e., subcutaneously). The total daily insulin dose can be divided into basal and bolus doses.

Basal insulin is delivered continuously over 24 hours, and keeps the blood glucose concentration levels (in brief blood glucose levels) in normal desirable range between meals and overnight. Basal insulin delivery rate can be changed during the day to counteract changing diurnal insulin requirements, for example during physical activity, sleeping, etc. Moreover, a specific daily basal administration curve can be stored (designated as a "basal profile") and retrieved upon patient discretion.

Insulin bolus doses are delivered before or after meals to counteract carbohydrates loads or during episodes of high blood glucose concentration levels. Current pumps contain electronic components and are provided with the necessary software to precisely calculate bolus doses according to meal size and carbohydrate content.

Due to the fact that Type 2 DM patients usually have some residual endogenous insulin, the basal/bolus administration mode of currently existing pumps is unnecessary, for the following reasons:

1. Most patients have enough insulin to sustain the basal requirements of the body but not to counteract the carbohydrates consumed in meals.
2. Basal requirements are usually met by a single long acting insulin injection per day (i.e., Glargine, Detemir).
3. Precise bolus dosing is of no clinical relevance because the amount of residual endogenous insulin and insulin resistance are unknown,
4. Conventional insulin pumps are costly, particularly because they include relatively expensive electronic components which are mainly used to control basal administration.

For these reasons, DM type 2 patients tend not to use insulin pumps.

Under some circumstances, conventional insulin pumps, although developed primarily for Type 1 DM patients, may not be appropriate for all Type 1 DM patients, for the following reasons:

1. The underlying technology involved makes currently available pumps relatively expensive and therefore not adequate for low budget patients.
2. The underlying technological sophistication of currently available pumps require learning of the many installed

features, an endeavor that makes many individuals uncomfortable with the use of these devices (i.e., fear of technology).

3. A major drawback of currently available pumps is their large size and weight, caused in part by numerous electronic components and the relatively large driving mechanism of these devices. These uncomfortable bulky fluid delivery devices are rejected by many diabetic insulin users.

SUMMARY OF THE INVENTION

Disclosed herein is a dispensing device which obviates the problems of conventional infusion devices and provides an improved device which is easy to use, affordable and operationally intuitive for diabetic patients.

In some embodiments, a portable device for bolus(es) delivery of injectable therapeutic fluid into the body of the patient at the patient's discretion is provided.

In some embodiments, a device for delivery of one or more anti-diabetic injectable drug bolus(es) to the body to achieve better glycemic control is described.

In some embodiments, a device that is miniature, discreet, user-friendly, economical for users and cost-effective for the payer that can deliver injectable drugs into the body of the patient is provided. The device can be configured to include a durable reusable part that contains the relatively expensive component(s) (e.g., a driving mechanism), and a disposable part to house the relatively cheaper components (e.g., a reservoir).

In some embodiments, a device that includes a miniature patch unit that can be secured to the skin and can deliver injectable drugs (e.g., in bolus doses) into the body is described. In some embodiments, bolus dose(s) adjustments and/or administrations can be done manually. In some embodiments, such adjustments and/or administrations can be done automatically and/or periodically, or be based on any desired schedule (e.g., scheduling profiles stored in a storage device that can be accessed by a controller and/or the user). In some embodiments, a device that can be easily connected and disconnected from a subcutaneous cannula is provided.

In some embodiments, the dispensing device includes two parts: a disposable part and a reusable part. The disposable part includes a reservoir intended to be filled with some therapeutic fluid (e.g., insulin) and an outlet port through which the fluid is transferred to the patient's body. The reusable part includes a driving mechanism and/or a pumping mechanism. The dispensing device may be operable upon connection of the two parts.

In some embodiments, neither the disposable part nor the reusable part includes electronic to enable low production cost and, as a result, a financially affordable device for DM: patients. Such devices may include a manually-power pumping mechanism and a power transfer mechanism to transfer manually-generated power provided by a user.

In some embodiments, the pumping mechanism may be a peristaltic-type mechanism, a piston-based mechanism, etc.

In some embodiments, the device is manually operable (e.g., manually-powered) and the power transfer mechanism (also referred to as a driving mechanism) includes mechanical components (e.g., springs, gears, etc.) and is implemented without components requiring electrically-generated power and/or without any electronic components (e.g., CPU, electronically-controlled sensors).

In some embodiments, operation of the device is relatively easy and simple, and includes, for example, pressing (actuating) of buttons or of a blower. Operating the disclosed device does not require any specialized skills, technical support and/or training, thus enabling operation of such device by patients who are less adept technologically, or who are otherwise apprehensive about dealing with complicated software or electronic device and/or applications.

Further embodiments described herein include a controller to monitor the amount of the dispensed therapeutic fluid and the fluid remaining in the reservoir. In some embodiments, an indicator, such as, for example, a detachable digital counter, enables the display of operational parameters (e.g., number of units delivered). In some embodiments, the indicator is cost-effective and requires a simple electric circuit.

In some embodiments, the reservoir holding the therapeutic fluid and housed within the device may be configured in various sizes to hold different volumes of therapeutic fluid.

In some embodiments, the reservoir holding the therapeutic fluid and housed within the device may be configured to hold different types of therapeutic fluid to enable delivery of various therapeutic fluids at the patient's discretion.

In one aspect, an ambulatory therapeutic fluid delivery device is disclosed. The device includes at least one housing connectable to a cannula, the at least one housing retaining a reservoir to hold the therapeutic fluid. The device also includes a mechanically powered pumping mechanism to cause delivery of at least some of the fluid from the reservoir, and a power-transfer mechanism to transfer manually-delivered power provided by a user to mechanically actuate the pumping mechanism.

Embodiments of the device may include one or more of the following features.

The device may further include a subcutaneously insertable cannula in fluid communication with the reservoir.

The device may be skin adherable.

The reservoir may be tillable by the user.

The mechanically-powered pumping mechanism may be configured to operate without using electrically-generated power.

The therapeutic fluid may includes one or more of, for example, insulin, Pramlintide acetate and/or Exentide (also referred as Exenatide, which is commercially known as BYETTA™).

The at least one housing may include a disposable part housing including at least a part of the reservoir and an outlet port to enable passage of the fluid to a body of the patient, and a reusable part housing attachable to the disposable part, the reusable part housing including at least the pumping mechanism and the power-transfer mechanism. The reservoir may be configured to be filled with the fluid prior to attachment of the disposable part to the reusable part.

The power-transfer mechanism may include a user-actuated rotateable wheel, and one or more gears coupled to the rotateable wheel and further coupled to the mechanically-powered pumping mechanism., the one or more gears configured to actuate the pumping mechanism to cause the delivery of the at least some of the fluid in response to rotation of the user-actuated wheel. The one or more gears may include at least one cog wheel in mechanical communication with at least one worm gear, and a screw-nut coupled to the worm gear and further coupled to a piston such that rotation of the screw nut causes displacement of the piston.

The mechanically-powered pumping mechanism may include a piston coupled to the reservoir, the piston further coupled to the power-transfer mechanism. Actuation of the piston by the power-transfer mechanism may cause displacement of the piston such that the piston causes at least some of the fluid in the reservoir to be displaced.

The device may further include a handle coupled to the piston to enable manual displacement of the piston. The device may further include a limiter to prevent displacement of the piston beyond a pre-set spatial position defined by the limiter. The limiter may include a stationary block to engage a projection extending from an end of the piston such that upon contact between the stationary block and the projection extending from the end of the piston, further displacement of the piston is prevented.

The pumping mechanism may include a peristaltic-type pumping mechanism. The peristaltic-type pumping mechanism may include a rotor coupled to a delivery tube to deliver therapeutic fluid, the rotor further coupled to the power-transfer mechanism such that manual power transferred by the power-transfer mechanism causes rotation of the rotor to cause displacement of therapeutic fluid contained within the delivery tube.

The power-transfer mechanism may include a spring-based mechanism actuated by the user, the spring-based mechanism configured to actuate the pumping mechanism upon actuation of the spring-based mechanism by the user. The spring-based mechanism may include a spiral spring coupled to at least one gear, the spiral spring biased in a first rotational direction, and a string coupled to the spiral spring to cause rotation of the spiral spring in another rotational direction to cause an increase in the tension of the spiral spring. Upon release of the string, the spiral spring may rotate in the first rotational direction to cause actuation of the power-transfer mechanism coupled to the spiral spring. The string may be configured to be moved to a position such that upon release of the string the spiral spring rotates a pre-defined radial distance that causes actuation of the pumping mechanism by an amount corresponding to delivery of a pre-determined amount of therapeutic fluid.

The pumping mechanism may include an inflatable air container to actuate the reservoir. The power-transfer mechanism may include at least one air injection device to deliver air to the inflatable air container. The at least one air injection device may include an air tube in communication with the inflatable air container, and an air compression chamber in communication with the air tube, the air compression chamber including a displaceable plunger. Upon actuation of the plunger by the user, air may be displaced from the air compression chamber into the inflatable air container through the air tube.

The device may further include an indicator to indicate operation of the mechanically powered pumping mechanism. The indicator may include one or more of, for example, an audible indicator to produce a sound and/or a visual indicator to produce a visual signal.

The device may further include a counter to display a value representative of an amount of therapeutic fluid delivered and/or to be delivered by operation of the device. The counter may be configured to indicate delivery of discrete bolus doses of the fluid from the reservoir. The counter may be configured to display units representative of the amount of delivered therapeutic fluid, each of the displayed unit representative of a pre-defined amount of the delivered therapeutic fluid. Operation of the counter may be based on operation of the power-transfer mechanism. Operation of the counter may be based on the operation of the power-transfer mechanism such that the power transfer mechanism actuates the counter. The counter may include a mechanically detachable counter housing configured to be attached and detached from the at least one housing.

The device may further include a measurement unit to determine extent of fluid delivered. The measurement unit may include an optical unit to detect one or more markings disposed on the power-transfer mechanism. The detection of the one or more markings may be indicative that a pre-determined amount of fluid was delivered. The power transfer mechanism may include a gear having one or more holes extending from one surface of the gear to the other surface. The optical unit may include a light source to illuminate a light beam towards the one surface of the gear, and a light sensor to detect light passing through the one or more holes.

The device may further include a cradle unit configured to receive the at least one housing retaining the reservoir, the cradle unit being securable to skin of a patient. The cradle unit may include an adhesive surface configured to be adhered to the skin of a patient, at least one latch configured to secure the at least one housing to the cradle unit, and a well to enable passage of the cannula therethrough. The device may further include a cannula cartridge unit, and the cannula may be subcutaneously insertable from the cannula cartridge unit through the cradle unit.

The device may further include an adapter connectable to the reservoir and further connectable to a refilling vial containing therapeutic fluid to be added to the reservoir.

The at least one housing may be configured to receive different size reservoirs.

In another aspect, an ambulatory therapeutic fluid delivery device is disclosed. The device includes at least one housing connectable to a cannula, the at least one housing retaining a reservoir to hold the therapeutic fluid. The device also includes a piston coupled to the reservoir, and a power-transfer mechanism to transfer manually-delivered power provided by a user to mechanically actuate the piston. Actuation of the piston by the power-transfer mechanism causes displacement of the piston such that the piston causes at least some of the fluid in the reservoir to be displaced.

Embodiments of the device may include any of the features of the first device described above.

In a further aspect, an ambulatory therapeutic fluid delivery device is discloses. The device includes at least one housing connectable to a cannula, the at least one housing retaining a reservoir to hold the therapeutic fluid. The device also includes a piston coupled to the reservoir, a user-actuated rotateable wheel., and one or more gears powered by manually-delivered power generated by a user, the one or more gears coupled to the rotateable wheel and further coupled to the piston. In response to rotation of the user-actuated wheel by the user the one or more gears mechanically actuate the piston to displace the piston and cause delivery of at least some of the fluid.

Embodiments of the device may include any of the features of the devices described above.

In yet another aspect, an ambulatory therapeutic fluid delivery device is disclosed. The device includes a reservoir to hold the therapeutic fluid, a peristaltic-type pumping mechanism, and a power-transfer mechanism to transfer manually-delivered power provided by a user to mechanically actuate the peristaltic-type pumping mechanism. Actuation of the peristaltic-type pumping mechanism by the power-transfer mechanism causes movement of the peristaltic-type pumping mechanism such that the peristaltic-type pumping mechanism causes at least some of the therapeutic to be displaced.

Embodiments of the device may include any of the features of the devices described above.

In another aspect, an ambulatory therapeutic fluid delivery device is disclosed. The device includes a reservoir to hold the therapeutic fluid, a rotor coupled to a delivery tube to deliver some of the therapeutic fluid, a user-actuated rotateable

wheel, and one or more gears powered by manually-delivered power generated by a user, the one or more gears coupled to the rotateable wheel and further coupled to the rotor. In response to rotation of the user-actuated wheel by the user the one or more gears mechanically actuate the rotor to cause displacement of fluid contained in the delivery tube.

Embodiments of the device may include any of the features of the devices described above.

In a further aspect, an ambulatory therapeutic fluid delivery device is disclosed. The device includes a reservoir to hold the therapeutic fluid, an inflatable air container to actuate the reservoir, and at least one manually-actuated air injection device to deliver air to the inflatable air container. Inflation of the air container causes at least some of the fluid in the reservoir to be displaced.

Embodiments of the device may include any of the features of the devices described above.

In yet another aspect, a method to administer therapeutic fluid held in a reservoir is disclosed. The method includes transferring manually-generated power provided by a user to a mechanically-powered pumping mechanism disposed in at least one housing connectable to a cannula, the at least one housing further retaining the reservoir. The method further includes mechanically actuating the pumping mechanism to cause delivery of at least some of the therapeutic fluid.

Embodiments of the method may include any of the features of the devices described above, as well as one or more of the following features.

Actuating the pumping mechanism may include actuating the pumping mechanism without using electrically-generated power.

Transferring the manually-generated power may include rotating a user-actuated rotateable wheel, and causing actuation of one or more gears coupled to the rotateable wheel in response to rotation of the rotateable wheel to cause actuation of the mechanically-powered pumping mechanism. The one or more gears may include at least one cog wheel in mechanical communication with at least one worm gear, and a screw-nut coupled to the worm gear and further coupled to a piston such that rotation of the screw nut causes displacement of the piston.

Actuating the pumping mechanism may include actuating a piston coupled to the reservoir, the piston further coupled to the power-transfer mechanism, and displacing the at least some of the fluid in response to actuation of the piston by the power-transfer mechanism.

The method may further include displaying a value representative of an amount of therapeutic fluid delivered. Displaying the value may include displaying a value indicative of delivery of discrete bolus doses of the fluid from the reservoir. Displaying the value may includes displaying the value representative of an amount of therapeutic fluid delivered based on extent of the manually generated power provided by the user.

The method may further include determining extent of fluid delivered. Determining the extent of the fluid delivered may include detecting one or more markings disposed on a power-transfer mechanism to transfer the manually generated power. The detection of the one or more markings may be indicative that a pre-determined amount of fluid was delivered. Detecting the one or more markings may include illuminating a light beam towards a first surface of the power-transfer mechanism having one or more holes extending from the first surface to another surface of the power-transfer mechanism, and detecting light passing through the one ore holes.

More features and embodiments of the present inventions will be illustrated in the detailed description.

BRIEF DESCRIPTION OF DRAWINGS

FIG. **1***a* is a schematic diagram of an exemplary single-part fluid delivery device.

FIG. **1***b* is a schematic diagram of an exemplary two-part fluid delivery device.

FIGS. **2***a-c* are views illustrating an exemplary fluid-delivery device being secured directly to the skin of the patient.

FIGS. **3***a-c* are views illustrating connection of an exemplary fluid delivery device to a cradle unit.

FIGS. **4***a-c* are views illustrating connection and disconnection of an exemplary fluid delivery device from a port unit.

FIGS. **5***a-c* are schematic diagrams and views of an exemplary cradle unit.

FIGS. **6***a-c* are schematic diagrams and views of an exemplary port unit.

FIGS. **7***a-b* are schematic and isometric views of an exemplary disposable part of a fluid delivery device.

FIGS. **8***a-b* are schematic and isometric views of an exemplary reusable part of a fluid delivery device.

FIG. **9** is a schematic diagram of an exemplary fluid delivery device that includes a reusable part and a disposable part.

FIGS. **10***a-b* are schematic diagrams of exemplary disposable parts.

FIGS. **11***a-g* are schematic diagrams and views depicting an exemplary reservoir-filling process using a plunger.

FIGS. **12***a-b* are schematic diagrams illustrating exemplary connection of the therapeutic fluid container to an adapter.

FIGS. **13***a-f* are views and diagrams illustrating an exemplary reservoir-filling process using a syringe.

FIGS. **14***a-c* are schematic diagrams of an exemplary cannula cartridge unit before and after insertion.

FIGS. **15***a-b* are schematic diagrams depicting connection of an exemplary fluid delivery device to an exemplary cradle.

FIG. **16** is a perspective view of an exemplary manually-powered fluid delivery device with a user-actuated rotation wheel.

FIGS. **17***a-b* are schematic diagrams of an exemplary manually-powered delivery device with a piston-based pumping mechanism.

FIG. **18** is a perspective view of an exemplary delivery device with manual-power actuation mechanism and a limiter.

FIGS. **19***a-c* are schematic diagrams of an exemplary fluid delivery device with a piston-based pumping mechanism and a limiter.

FIG. **20** is a schematic diagram of an exemplary manually-powered fluid delivery device with a peristaltic-based pumping mechanism.

FIGS. **21***a-c* are perspective views of an exemplary manually-powered actuation process using a spring mechanism.

FIG. **22** is a schematic diagram of an exemplary manually-powered fluid delivery device with a spring mechanism.

FIGS. **23***a-c* are perspective views illustrating operation of a pump-air fluid delivery device.

FIGS. **24***a-b* are schematic diagrams of a fluid delivery device using a pump-air mechanism.

FIGS. **25***a-c* are schematic diagrams of another exemplary configuration for a fluid delivery device with a piston-based mechanism.

FIGS. **26***a-b* are perspective views of an exemplary fluid delivery device with a detachable counter.

FIGS. **27***a-c* are schematic diagrams illustrating connection of an exemplary counter to a fluid delivery device.

FIGS. **28***a-b* are schematic diagrams of an exemplary counter implemented with an optical sensing mechanism.

FIGS. **29***a-c* are perspective views of an exemplary fluid delivery device with a detachable reservoir.

FIGS. **30***a-b* are views of exemplary reservoirs of different sizes.

DETAILED DESCRIPTION OF DRAWINGS

Disclosed are ambulatory therapeutic fluid delivery devices and methods. A disclosed device includes at least one housing connectable to a cannula, the at least one housing retaining a reservoir to hold the therapeutic fluid, a mechanically powered pumping mechanism to cause delivery of at least some of the fluid from the reservoir, and a power-transfer mechanism (i.e., a driving mechanism) to transfer manually-delivered power provided by a user to mechanically actuate the pumping mechanism. The mechanically-powered pumping mechanism is configured to operate without using electrically-generated power. In some embodiments, the power-transfer mechanism includes a user-actuated rotateable wheel, and one or more gears coupled to the rotatable wheel and further coupled to the mechanically-powered pumping mechanism. The one or more gears are configured to actuate the pumping mechanism to cause the delivery of the at least some of the fluid in response to rotation of the user-actuated wheel. In some embodiments, the mechanically-powered pumping mechanism includes a piston coupled to the reservoir and further coupled to the power-transfer mechanism. Actuation of the piston by the power-transfer mechanism causes displacement of the piston such that the piston causes at least some of the fluid in the reservoir to be displaced. In some embodiments, the pumping mechanism includes a peristaltic-type pumping mechanism and/or an inflatable air container to actuate the reservoir. Other types of power-transfer mechanisms and/or mechanically actuated pumping mechanisms may be used.

In some embodiments, fluid infusion device described herein includes the following units:

- A dispensing patch unit having a reservoir and a driving mechanism (i.e., power-transfer mechanism). The dispensing patch unit (hereinafter referred to as the "patch unit" or the "dispensing device" or the "fluid delivery device") may include one or more parts. The dispensing patch unit can be secured. (e.g., adhered) directly to the skin of the patient.
- A cradle unit that is securable (e.g., adherable) to the skin of the patient and configured to enable connection and disconnection of the dispensing patch unit,
- A cannula cartridge unit that includes a cannula and is configured to, among other things, shield the sharp end of a penetrating member which is deployed in the cannula cartridge unit before and after insertion.

In some embodiments, the device may include a port unit. The port unit may be configured to enable connection of the dispensing device during operation of the device (e.g., delivery of a drug to the body of the patient). After completion of operation of the device, the dispensing patch unit may be disconnected from the port unit and kept away from the body of the patient.

Referring to FIGS. **1***a*-**6***c*, schematic diagrams and views illustrating an exemplary fluid infusion device **10** and various exemplary configurations to attach the device **10** to the body of the patient are shown. FIG. **1***a* is a schematic diagram of an exemplary single-part fluid delivery device **10**, FIG. **1***b* is a schematic diagram of an exemplary two-part fluid delivery device **10**. The two-part device **10** may be configured to include a reusable part **100** and a disposable part **200**. The reusable part **100** may include relatively expensive components of the device **10** such as, for example, a driving mechanism (i.e., a power transfer mechanism) to cause fluid delivery from the reservoir to the patient's body. The disposable part **200** may include the relatively cheaper and replaceable components of the device **10** such as, for example, the reservoir, cannula, etc.

Referring to FIGS. **2***a-c*, views depicting exemplary ways of securing the device **10** to the skin **5** of a patient are shown. FIG. **2***a* illustrates removal of an adhesive protection layer **101** from the dispensing device **10**. FIG. **2***b* illustrates securing the dispensing device **10** to the skin **5** of the patient. FIG. **2***c* illustrates the device **10** being secured (e.g., adhered) to the skin **5** of the patient. The device **10** may be adhered directly to the skin **5** of the patient.

Referring to FIGS. **3***a-e*, views illustrating an exemplary cradle unit **20** that is secured to the skin **5** of the patient are shown. The dispensing device **10** may be connected to and disconnected from the cradle unit **20** at the patient's discretion. FIG. **3***b* shows exemplary connection of the dispensing device **10** to the cradle unit **20**. FIG. **3***c* illustrates an exemplary dispensing device **10** being connected to the cradle unit **20** and ready to operate.

Referring to FIGS. **4***a-c*, views illustrating an exemplary port unit **30** secured to the skin **5** of a patient are shown. The dispensing device **10** may be connected to the port unit **30** during operation of the device **10** (e.g., during drug delivery). After completion of the drug administration, the dispensing device **10** may be disconnected from the port unit **30** and kept away from the patient. A description of port units similar to the port unit **30** are provided, for example, in co-owned U.S. Provisional Application No. 60/963,039, filed Aug. 1, 2007, and entitled "Device and Method for the Infusion of Therapeutic Fluid and Sensing of Bodily Analytes," U.S. Provisional Application No. 61/008,694, filed Dec. 21, 2007, and entitled "Device and Method for the Infusion of Therapeutic Fluid and Sensing of Bodily Analytes," as well is in co-owned non-provisional U.S. patent application entitled "Device and Method for the Infusion of Therapeutic Fluid and Sensing of Bodily Analytes," filed on the same day as the present application, the contents of all of which are hereby incorporated by reference in their entireties. The port unit **30** is configured to enable the patient/user to adhere a much smaller and less bulky item to the skin **5** instead of securing the larger cradle unit **20** to the skin **5**. The port unit is coupleable to a cradle unit and/or a fluid delivery device. In some embodiments, the patient cannot leave the dispensing device **10** attached to the body when using the port unit **30**. FIG. **4***a* illustrates the port unit **30** being adhered to the body of the patient FIG. **4***b* illustrates an exemplary connection of the dispensing device **10** to the port unit **30**. FIG. **4***c* illustrates the dispensing device **10** being disconnected from the port unit **30**.

Referring to FIGS. **5***a-c*, schematic diagrams and views of an exemplary cradle unit **20** are shown. FIG. **5***a* is a cross-sectional view of the cradle unit **20** secured (e.g., adhered) to the skin **5** of the patient. The cradle unit **20** includes a flat surface **300** with an adhesive layer attached to its bottom (not shown in FIG. **5***a*) and latches **302** and (**304**) to secure a dispensing device to the cradle unit **20**. The cradle unit also includes a well **310** to enable passage of a cannula (not shown in FIG. **5***a*) during its insertion into the skin (e.g., into the subcutaneous tissue). FIG. **5***b* is a top view of the cradle unit **20**. FIG. **5***c* is an isometric view of the cradle unit **20**.

Referring to FIGS. **6***a-c*, diagrams of an exemplary port unit **30** are shown. FIG. **6***a* is a cross-sectional view of the port unit **30** being secured (e.g., adhered) to the skin **5** of the patient. FIG. **6***b* is a top view of the port unit **30**. FIG. **6***c* is an isometric view of the port unit **30**. The port unit **30** includes a flat surface **401** having an adhesive layer attached to its bottom (not shown in FIGS. **6***a-c*) and latches **402**, **404** and **406** to secure the dispensing device **10** to the port unit **30**. A cannula (not shown in FIGS. **6***a-c*) may be inserted via the well **310** using an inserter such as an inserter described, for example, in co-owned International Patent Application No. PCT/11,08/000,860, filed Jun. 25, 2008, claiming priority to U.S. Provisional Patent Application No. 60/937,214, entitled "Insertion device for inserting a cannula into a body," filed on Jun. 25, 2007, the content of which is hereby incorporated by reference in its entirety.

Referring to FIGS. **7***a*-**9**, schematics and views of an exemplary two-part dispensing patch device **10** that includes a disposable part and a reusable part are shown.

FIG. **7***a* illustrates an exemplary disposable part **200**. The disposable part **200** includes a reservoir **220**, a tube **230** and an outlet port **213** through which therapeutic fluid (e.g., insulin) can be injected to the body of the patient. FIG. **7***b* is an isometric view of the disposable part **200**. The disposable part **200** can be configured to be replaced either at predetermined time intervals (e.g., 3 day intervals), whenever the reservoir **220** becomes empty, or automatically.

Referring to FIG. **8***a*, a schematic diagram of an exemplary reusable part **100** of a fluid-dispensing device is shown. The reusable part **100** includes a mechanical driving and pumping mechanism (collectively designated **150** in FIG. **8***a*), a counter **900** and one or more actuation units **14** to, for example, transfer manual-power provided by the user to power the driving and/or pumping mechanisms. The driving and pumping mechanism **150** may be configured as low-cost mechanisms manufactured from relatively inexpensive components. FIG. **8***b* is an isometric view of the reusable part **100**.

Referring to FIG. **9**, a schematic diagram of an exemplary assembled two part dispensing device **10** is shown. Specifically, the device **10** includes a reusable part **100** coupled to a disposable part **200**. In some embodiments, the pumping mechanism **150** may be configured to be mechanically coupled to the reservoir **220** (e.g., in implementations that includes a piston-type pumping mechanism) or to the delivery tube **230** (e.g., in implementation that include a peristaltic-based pumping mechanism). The disposable part **200** includes a reservoir **220** that may be filled prior to attachment of the disposable part **200** to the reusable part **100**.

Referring to FIGS. **10***a*-**13***f*, diagrams depicting an exemplary piston-type pumping mechanism and exemplary ways of filling the reservoir **220** with therapeutic fluid are shown.

Referring to FIG. **10***a*, a schematic diagram of an exemplary disposable part **200**, functioning by itself as a reservoir **220**, is shown. In this configuration, the volume of the reservoir **220** is limited by the volume of the disposable part **200**. The device includes a piston-type pumping mechanism. The pumping mechanism is provided with a piston **112** which includes a plunger rod **110** and a plunger head **111**. The piston is configured to push fluid towards an outlet port **213** that is typically situated at the bottom of the disposable part **200**. FIG. **10***b* depicts another implementation of an exemplary disposable part **200** that includes dedicated reservoir **220** and a piston **112**. In the shown embodiment of FIG. **10***b*, the piston **112** includes a plunger rod. **110** and a plunger head **111**. The piston **112** can be situated inside the reservoir **220**. A tube **230** is provided to deliver therapeutic fluid from the reservoir **220** to the outlet port **213**.

Referring to FIG. **11***a*, a cross-sectional schematic diagram of an exemplary disposable part **200**, similar to the disposable part **200** depicted in FIG. **10***b*, is shown. The disposable part is depicted prior to filling of the reservoir **220** with fluid. Filling of the reservoir **220** is performed using a plunger rod **110** and a plunger head **111**. Referring to FIG. **11***b*, a diagram of an exemplary drug vial **9** prior to its connection to the disposable part **200** is shown. FIG. **11***c* illustrates the vial **9** connected to the outlet Port **213**. As shown, the disposable part **200** may include a connecting lumen **250** to pierce the vial septum **7** to enable fluid to be drawn from the vial **9** to the reservoir **220** using, for example, a retractable plunger. FIGS. **11***d*-**11***f* illustrate an exemplary filling procedure of the reservoir **220**. The amount of fluid to be drawn may be determined, based on the patient's daily dose requirement to thus reduce therapeutic fluid waste. FIG. **11***g* illustrates exemplary priming (e.g., air purging) of the reservoir **220**. Air bubbles can be purged by holding the disposable part **200** in a substantially upright position (i.e., when the outlet port **213** is generally elevated) and gently pressing the plunger **112** until fluid **8** is seen to be dripping from the outlet port **213**.

Referring to FIG. **12***a-b*, schematic diagrams of another exemplary reservoir filling procedure using an auxiliary adapter **216** are shown. FIG. **12***a* depicts the adapter **216** having two ports: an upper port **211** and a lower port **211'**. The upper port **211** is configured to be connected to the vial **9** and may be provided with a needle **215** to pierce the vial's septum **7**. The lower port **211'** is configured to be connected to the reservoir **220** and can be sealed with a rubber septum **217** that is pierceable by a lumen **250** disposed in the outlet port **213**. A displaceable piston **112** may be received (at least partially) within the volume of the reservoir **220** of the disposable part **200**. FIG. **12***b* illustrates an exemplary connection of the adapter **216** to the disposable part **200** and the vial **9**. To draw fluid from the vial **9**, the piston **112** is retracted outwardly from the inner volume of the reservoir **220** to cause fluid from the vial to be received.

In some embodiments, the reservoir **220** of the dispensing device may be filled using a syringe. Referring to FIGS. **13***a-f*, diagrams depicting an exemplary reservoir-filling procedure using a syringe **80** are shown. FIG. **13***a* illustrates fluid being drawn from the vial **9**. FIG. **13***b* illustrates the reservoir **220** having an outlet port **213** at its bottom surface. In some embodiments, the reservoir **220** can be connected to the outlet port **213** via a tube (not shown in FIG. **13***a*). The syringe needle **218** is configured to pierce the rubber septum **219** of the inlet port **212** to enable filling. Referring to FIGS. **13***c*-**13***e*, diagrams depicting another exemplary reservoir-filling procedure using a syringe are shown. FIG. **13***f* illustrates an exemplary priming procedure of the reservoir **220**. As shown in FIG. **13***f*, the reservoir is filled until fluid drops **8** begin to drip from the outlet port **213**.

Referring to FIG. **14***a*, a schematic diagram of an exemplary cannula cartridge unit **400** is shown. The cannula cartridge unit **400** includes a cannula hub **414**, a septum **311** and a cannula **6**. FIG. **14***b* illustrates an exemplary port unit **30** configured to receive the cannula cartridge unit **400**. The port unit includes a well **310** through which the cannula cartridge unit **400** is inserted. The cannula cartridge unit **400** can be inserted using, for example, an inserter manual, semi-automatic and/or automatic). A description of such an exemplary inserter is disclosed, for example, in co-owned International Patent Application No, PCT/IL08/000860, filed Jun. 25, 2008, claiming priority to U.S. Provisional Patent Application No. 60/937,214, entitled "Insertion device for inserting a cannula into a body," filed on Jun. 25, 2007, the content of which is hereby incorporated by reference in its entirety. FIG.

14*c* illustrates cannula cartridge unit **400'** that has been inserted into the well **310** of the port unit **30** and the cannula **6** subcutaneously inserted into the patient's skin.

Referring to FIG. **15***a*, a schematic diagram of an exemplary fluid delivery device **10** positioned to being connected to the port unit **30** is shown, FIG. **15***b* illustrates the exemplary device **10** connected to the port unit **30**. As shown, a connecting lumen **214**, provided in the fluid delivery device, is configured to pierce the septum **311** of the port unit to thus enable fluid to flow from the reservoir **220** to the cannula **6** and to the subcutaneous layer **4**.

Referring to FIGS. **16-25***c*, diagrams and views illustrating various exemplary manually-powered driving and pumping mechanisms are shown.

FIG. **16** is a perspective view of an exemplary dispensing device **10**. The dispensing device **10** can be provided with any of the above-described components/units and/or with a dedicated controller to perform manual/semi-automatic/automatic or otherwise regulate fluid delivery to the body of the patient. In some embodiments, such a controller enables manual actuation of a driving and/or pumping mechanism of the device **10** and may include, for example, an activation wheel **195**. As will become apparent below, rotation of the activation wheel (also referred to as an actuation wheel) **195** causes fluid infusion/delivery. A counter **900** may be disposed on the dispensing patch unit to enable control of to be delivered dose(s). Manual rotation of the activation wheel **195** may cause actuation of the pumping mechanism (e.g., piston-type or peristaltic-type pumping mechanism) to thus cause fluid infusion to be performed. For an accurate control of fluid delivery, an indicator producing a signal (e.g., a click sound, a visual indication such as flashing light, or any other indication) may be provided to accompany activation/actuation of the wheel **195**, in some embodiments, the activation wheel rotation is rotatable in a unidirectional manner to prevent retraction of delivered therapeutic fluid back into the reservoir. Alternatively and/or additionally, the pumping mechanism may be retracted in particular situations, such as, for example, during reservoir filling, reservoir replacement, to verify the driving mechanism proper functionality, etc.

Referring to FIG. **17***a*, a schematic diagram of an exemplary fluid delivery device **10** that includes an activation/actuation wheel **195** operatively coupled to a piston-type pumping mechanism **151** is shown. The activation wheel **195** may be connected to a power-transfer mechanism (also referred to as a driving mechanism) to transfer manually-delivered power provided by a user to mechanically actuate a pumping mechanism. The delivery device may thus be implemented without using electrically-generated power. The driving mechanism may include, in some embodiments, one or more gears. For example, the one or more gears may include a small-size cog-wheel **606** having teeth that can engage with teeth of a larger cog-wheel **615**. Rotation of the wheel **195** causes the larger cog-wheel **615** to turn and to consequently rotate a worm **610**. One end of the worm **610** is rigidly connected to one side of a rod **612**. The other side of the rod **612** is connected to a cog-wheel **608**. Rotation of the cog-wheel **608** urges a screw-nut **614** operatively coupled therewith to turn. By turning the screw-nut **614**, the threaded rod of piston **112** of the pumping mechanism, which is operatively coupled to the screw-nut, is linearly displaceable in a forward direction. When linearly displaced, the piston **112** is configured to push fluid within the reservoir **220** and force it to pass through the tube **230** and exit from the outlet port **213**.

FIG. **17***b* further illustrates the piston-type pumping mechanism during movement of the piston **151**, which forces fluid to exit through the outlet port **213**. After completing the infusion operation and depleting the reservoir, the user (e.g., patient) can manually retract the piston **112** (e.g., using a handle coupled to the piston **112**) backward until the piston is in its initial position, whereupon the reservoir and/or the entire disposable part **200** may be replaced with a new one.

Referring to FIG. **18**, an isometric view of another exemplary configuration of the device **10** implemented using a piston-type mechanism is shown. The dispensing device may be provided with rotating activation/actuation wheel **195**, a limiter handle **197** and a limiter track **199**. A counter **900** may be provided to facilitate manual control of the fluid delivery.

Referring to FIG. **19***a*, a schematic diagram of another exemplary fluid delivery device with a manually-powered driving and pumping mechanism, similar to those depicted in FIGS. **17***a-b*, and that further includes a limiter **616** is shown. The limiter **616** is configured to prevent displacement of the piston beyond a pre-set spatial position defined by the limiter. The pumping mechanism is provided with a screw-nut **613** and a limiter's nut **614**. The rotating screw nut **613** rotates the limiter's nut **614** which consequently displaces the limiter **616** in a forward direction or by actuating the piston with the driving mechanism. The limiter **616** position sets the allowed distance for piston displacement. The displacement of the piston **112** may be performed, for example, by pushing the handle **197** in a forward direction. Piston displacement can be halted when the piston's bottom end **618** comes in contact with the limiter **616**. In some embodiments, additional safety measures may be employed to enable the patient to press the handle **197** in a downward direction prior to displacement of the handle **197**. Such safety measures would prevent unintentional bolus delivery. FIG. **19***b* illustrates an exemplary device **10** after dose adjustment, performed by rotating the activation/actuation wheel **195** which causes the limiter **616** to advance an to initial position. FIG. **19***c* illustrates the piston **112** at the end of the drug delivery operation when the bottom end **618** of the piston reaches the point of contact with the limiter **616**. In some embodiments, the limiter may be actuated separately from the driving mechanism. Alternatively and/or additionally, the limiter may be used as a safety mechanism to lock the driving mechanism and to thus prevent accidental fluid delivery.

Referring to FIG. **20**, a schematic diagram of another exemplary fluid-delivery device **10**, implemented using peristaltic-based mechanism **154**, is shown. The device **10** includes a rotateable activation/actuation Wheel **195** coupled, e.g., via an axle **504**, to a small-size gear (cog-wheel) **506**. Rotation of the activation wheel **195** causes the two other larger gears **508** and **510** to rotate to cause rotation of a peristaltic rotor **512**.

The peristaltic rotor **512** is configured, during its rotation, to press a tube **230** against a stator **530** to enable fluid pumping towards the outlet port **213** and into the patient's body. A counter **900** is included with the device **10** to count the number of wheel revolutions to thus indicate the amount of drug dose (e.g., insulin units) delivered.

It is to be noted that in the embodiments described above in connection with FIGS. **16-20**, the fluid dispensing patch unit can be provided with functionality for autonomous control of the fluid delivery (e.g., without implementing automatic control to automatically regulate the extent of pump actuation and/or fluid delivery). This capability can be rendered by virtue of providing the dispensing patch unit with a dedicated control mechanism operatively coupled to the dispensing mechanism. Autonomous control of fluid delivery can enable manufacturing of a dispensing patch unit **10** without expensive electronics or optical component. The second advantage of such a patch unit lies in the fact that it removes apprehen-

sions a user may have about using a device implemented using automatic fluid infusion capability (e.g., device which electronically controls the amount of insulin delivered to his/her body). Thus, with devices such as the exemplary devices described herein, the patient manually controls the fluid delivery and is able to actuate (including starting, stopping and/or resuming) drug delivery at his/her own discretion.

Referring to FIGS. **21***a-c*, diagrams of an exemplary fluid delivery device **10** having a spring-based mechanism to actuate the power-transfer and/or pumping mechanism of the device is shown. The spring mechanism is provided with a spring, loadable upon pulling a spring handle **702** connected to a pulling string **704** to enable delivery of a pre-determined dosage (e.g., bolus dosage). This mechanism thus frees the patient/user from having to continually manually actuate the device until delivery of the required dosage is completed. Thus, after the spring of the spring mechanism is loaded (i.e., the string is pulled), the release of the spring (e.g., to cause delivery of bolus dosage) requires no additional operational intervention from the patient. FIG. **21***a* illustrates dispensing device **10** prior to commencement of delivery operations. FIG. **21***b* illustrates the device **10** in operation, i.e., during the pulling action. As shown, the string coupled to the spring is pulled, using a pulling-spring handle **702** to an initial position. Particularly, the string coupled to the spring is pulled in a rotational direction opposite the rotational direction at which the spiral spring is biased. FIG. **21***c* illustrates retraction of the pulling string **704** upon release of the pulling handle **702**. Release of the string causes the spiral spring to rotate in the direction in which the spiral spring is biased to thus cause rotation of the at least one gear coupled to the spring-based mechanism.

Referring to FIG. **22**, a schematic diagram of a driving mechanism (power-transfer mechanism) **152** actuated by a spiral spring **706** (in a manner similar to that shown in relation to FIGS. **21***a-c*) is shown. A handle **702** is connected to the spiral spring **706** by a string **704**. By pulling the handle **702**, the patient loads the spiral spring **706**. Upon release of the handle **702**, the spiral spring **706** is discharged and drives one or more gears, for example, the cogwheels **714**, **716** and **718**. The one or more gears of the driving mechanism cause, in turn, a rotor **512** of the peristaltic-based mechanism to be rotated, Rotation of the rotor **512** causes dispensation of fluid via the tube **230** to the outlet port **213** and to the body of the patient. Each string pulling and releasing action corresponds to the discharge of a predetermined dose (e.g., 1 IU of insulin) into the body of the patient. In some embodiments, this driving mechanism **152** can be employed to actuate a piston-type pumping mechanism (not shown in FIG. **22**). The driving mechanism **152** may be configured to impart to the dispensing patch unit an ability for autonomous control of fluid delivery, i.e. the dispensing is completely controlled by the patient (e.g., the user provides entirely the actuation required to cause operation of the driving mechanism and/or the pumping mechanism).

Referring to FIGS. **23***a-c*, perspective views of an exemplary fluid delivery device including a user-actuated "pump-air" infusion pump is shown. FIG. **23***a* illustrates fluid pumping by pressing buttons **15** provided on both sides of the device **10**. FIG. **23***b* illustrates pumping by pressing a pumping button **16** situated on the top of the device **10**. FIG. **23***c* illustrates pumping by using activation/actuation mechanism configured as a blower **17**. A transparent window **950** enables monitoring of the content of reservoir **220**.

Referring to FIGS. **24***a-b*, schematic diagrams of an exemplary fluid delivery device **10** that includes a "pump-air"-based mechanism **153** is shown. The pump-air mechanism includes an inflatable air container **802** to actuate the reservoir **220**, and at least one air-injection device to deliver air to the inflatable air container. In some embodiments, each of the at least one air injection device includes an air tube in communication with the air container and an air compression chamber in communication with the air tube. The air compression chamber includes a plunger displaceable by the user within an inner volume of the air compression chamber. In some embodiments, the plunger is implemented as a user-actuatable button **15** coupled to an outwardly biased spring. Actuation of the button to push it inwards into the air compression chamber causes air to be pumped into the air container. When the user releases the button, the outwardly biased spring causes the button to be displaced outwardly to its initial position to thus cause ingress of ambient air into the air compression chambers **808**. FIG. **24***a* illustrates a dispensing device **10** in its initial state prior to operation, at which point the buttons **15** are not pressed and the displaceable plungers (e.g., the buttons coupled to the springs **806**) are in their released positions. As shown, the inflatable air container **802** is connected via air tubes **810** and unidirectional valves **803** to the air compression chambers **808**. In the schematic of FIG. **24***a*, the air container is substantially empty. FIG. **24***b* illustrates the device **10** in operation. By pressing the buttons **15**, air is pushed from the chambers **808** via the air tubes **810** and the unidirectional valves **803** into the air container **802**. The air container **802** inflates and causes actuation of the reservoir **220** to thus cause dispensation of the fluid from the reservoir **220**. The air container **802** remains inflated as the air movement out is limited by the unidirectional valves **803**. In some embodiments, air movement into the air compression chambers is directed by unidirectional valves enabling entrance of ambient air into the chamber and preventing its release from the air compression chambers.

Referring to FIG. **25***a*, a schematic diagram of an exemplary device **10** prior to its connection to an indicator (counter) **900** is shown. As shown in FIG. **25***a*, racks of the rod **58** and racks of the gear **56** are not engaged at that point. Thus, rotating the gear **56** will not move the plunger **55**. FIG. **25***b* illustrates an exemplary device **10** after connection of the counter **900**. The connection of the counter **900** to its housing **907** engages the gear **56** and the threaded rod **58**. FIG. **25***c* illustrates the device **10** in operation. By turning the rotation wheel **50**, a set of gears (cog wheels) are actuated. The teeth of the gear **56** and the thread of the threaded rod **58** are configured to engage and cause the plunger **55** to move in a forward direction, which causes infusion to occur.

Referring to FIGS. **26***a-b*, perspective views of an exemplary detachable digital counter **900** to facilitate reservoir content monitoring and control is shown. Detaching the counter **900** enables the patient to estimate the status of the dispensing device **10** without suspending its operation. FIG. **26***a* illustrates the digital counter **900** being detached from its housing **907**. The counter **900** can be detached by, for example, pressing a release button **903**. FIG. **26***b* illustrates the counter clock **900** being grasped by the patient (e.g., held in the patient's hand). The patient can connect and/or disconnect the digital counter **900** while the pump **10** remains attached to the body and in continued operation. The counter **900** may be a mechanical, electrical, optical or electrochemical counter. In some embodiments, the counter and the dispensing device may communicate wirelessly, enabling status update of the dispensing device when the counter is detached from the device.

Referring to FIGS. **27***a*-**28***b*, schematic diagrams of exemplary durable optical counter **900** are shown.

FIG. **27***a* is a schematic diagram of an exemplary embodiment of a counter **900**. The counter **900** includes of a power source (e.g., a battery **62**), and two connectors **65** and **65'**, a counting controller **64** to perform the counting operations and a display **66**. FIG. **27***b* is a schematic diagram of an exemplary fluid delivery device **10** (e.g., a device implemented using a peristaltic-based pumping mechanism) without the counter **900** being connected to the device. The reusable part **100** of the device **10** includes a measurement unit to determine the extent of fluid delivery. Such a measurement unit may include an optical sensing unit **70** and two connectors **67** and **67'**. The optical sensing unit **70** is configured to detect one or more markings disposed on the power-transfer mechanism (the driving mechanism). Detection of the one or more marking is indicative that a pre-determined amount of therapeutic fluid was delivered. The optical sensing unit includes a source of light and a detector. The source of light and the detector can be configured to be located on each side of one of the gears constituting the driving mechanism (e.g., the cog wheel **69**). In some embodiments, the markings on the cog wheel **69** may be holes **73** and **73'**. FIG. **27***c* depicts the counter **900** being connected to the device **10**. By connecting the counter **900** to the device **10**, the device's electrical circuit is closed and thereby enables measurement of data by the optical sensor **70**, wherein such data is forwarded to the counter **900** and displayed. Specifically, the light source of the optical unit **70** is configured to illuminate a light beam towards one surface of the cog wheel **69**. As the cog wheel rotates, the position of at least one of the holes will cross the path of the illuminated light beam, and as a result the light beam will pass through the hole and be detected by the sensor. Detection of the light beam will thus indicate that a particular amount of fluid (corresponding to the amount of fluid resulting from rotation of the cog wheel **69** by a certain amount) has been delivered.

FIG. **28***a* illustrates light **2000** passing through one of the holes **73** in the cog-wheel **69** from the light source **71** to the optical detector **72**. FIG. **28***b* illustrates light **2000** being blocked when it cannot pass through the cog wheel **69** (thus indicating that the pre-determined amount of fluid has not yet been fully delivered).

FIGS. **29***a-c* illustrate exemplary ejection of a replaceable reservoir. Patients of Type 2 DM pumps use reservoirs with different reservoir volumes (e.g., different amount of insulin) depending on various medical and body conditions/needs. Replacing only the reservoir within the dispensing device **10** enables the patient to use the same dispensing patch unit **10** and change the amount of fluid to be delivered without replacing the whole patch unit **10**. FIG. **29***a* illustrates an exemplary reservoir cover **222** opened by pressing a button **224**. FIG. **29***b* illustrates the reservoir **220** inside its chamber **226** while the chamber cover **222** is open. FIG. **29***c* illustrates ejection of the reservoir **220** from the chamber **226**.

FIG. **30***a-b* illustrate exemplary various-size reservoirs **220** that may be employed in the dispensing device **10**. Particularly, FIG. **30***a* shows a 2 IU size insulin reservoir **220**, while FIG. **30***b* shows a 5 IU insulin reservoir **220**.

Although particular embodiments have been disclosed herein in detail, this has been done by way of example for purposes of illustration only, and is not intended to be limiting with respect to the scope of the appended claims, which follow. In particular, it is contemplated that various substitutions, alterations, and modifications may be made without departing from the spirit and scope of the invention as defined by the claims. Other aspects, advantages, and modifications are considered to be within the scope of the following claims. The claims presented are representative of the inventions disclosed herein. Other, unclaimed inventions are also contemplated.

The invention claimed is:

1. A portable ambulatory therapeutic fluid delivery device for delivering a therapeutic fluid in bolus doses into a body of a patient, the device comprising:

at least one housing connectable to a cannula, and

a cradle securable to the patient's skin, wherein the cradle is configured for releasably receiving the at least one housing enabling connection and disconnection of the at least one housing therefrom;

the at least one housing including:

a reservoir for storing, a therapeutic fluid;

a mechanically powered pumping mechanism for delivering one or more bolus doses of the therapeutic fluid from the reservoir to the body of the patient through the cannula, wherein the pumping mechanism is configured to operate without using electrically-generated power; and

a. power-transfer mechanism for transferring manual power provided by a user to mechanically actuate the pumping mechanism; and

wherein the at least one housing includes:

a disposable part housing including at least a part of the reservoir and an outlet port for enabling passage of the fluid to the body of the patient; and

a reusable part housing removably attachable to the disposable part, the reusable part housing including at least a portion of the pumping mechanism and the power-transfer mechanism; wherein the device is operable upon attachment of the reusable part housing and the disposable part housing; and

wherein the reservoir is configured to be filled with the fluid prior to attachment of the disposable part to the reusable part.

2. The device according to claim **1**, wherein the therapeutic fluid includes one or more of: insulin, pramlintide acetate and exenatide.

3. The device according to claim **1**, wherein the power-transfer mechanism comprises a user-actuated rotatable wheel and one or more gears for transferring power between the wheel and the pumping mechanism for causing delivery of a bolus dose in response to rotation of the user-actuated wheel.

4. The device according to claim **3**, wherein the one or more gears comprise at least one cog wheel in mechanical communication with at least one worm gear and a screw-nut coupled to the worm gear and further coupled to a piston of the pump such that rotation of the worm gear causes displacement of the piston.

5. The device according to claim **1**, wherein the pump comprises:

a piston coupled to the reservoir, the piston further coupled to the actuator; wherein movement of the piston by the actuator results in displacement of the piston for delivery of a bolus dose.

6. The device according to claim **1**, further comprising a limiter for limiting displacement of the pumping mechanism, wherein the limiter prevents displacement of the pumping mechanism or the power-transfer mechanism beyond a preset spatial position defined by the limiter corresponding to a bolus dose.

7. The device according to claim 6, wherein the bolus dose corresponds to a predetermined

amount configurable by user adjustment of the limiter.

8. The device according to claim 6, wherein the limiter comprises a stationary block for engaging a projection extending from an end of the piston such that upon contact between the stationary block and the projection extending from the end of the piston, further displacement of the piston is prevented.

9. The device according to claim 1, wherein the pumping mechanism comprises a peristaltic pump, wherein the peristaltic pump comprises a rotor coupled to a delivery tube for delivering one or more bolus doses, the rotor further coupled to the actuator such that manual power transferred by the actuator causes rotation of the rotor resulting in displacement of therapeutic fluid contained within the delivery tube.

10. The device according to claim 1, wherein the actuator includes a spiral spring configured to operate the pumping mechanism upon activation of the spring by the patient, and wherein the actuator further comprises: at least one gear coupled to the spiral spring, wherein the spiral spring is biased in a first rotational direction; and a string coupled to the spiral spring for causing rotation of the spiral spring in a second rotational direction for increasing in the tension of the spiral spring, wherein upon release of the string, the spiral spring rotates in the first rotational direction resulting in movement of the power-transfer mechanism resulting in pumping mechanism operation.

11. The device according to claim 10, further comprising a limiter for limiting displacement of the pumping mechanism, wherein the limiter prevents the string from moving beyond a predetermined position such that upon release of the string, the spiral spring rotates a predetermined radial distance causing delivery of a bolus dose by the pumping mechanism corresponding with the predetermined amount.

12. The device according to claim 1, wherein the pumping mechanism comprises an inflatable air container configured for driving fluid from the reservoir, and wherein the power-transfer mechanism comprises at least one air injection device for delivering air to the inflatable air container.

13. The device according to claim 12, wherein the at least one air injection device comprises: an air tube in communication with the inflatable air container; and an air compression chamber in communication with the air tube, the air compression chamber including a displaceable plunger, wherein upon movement of the plunger by the patient, air is displaced from the air compression chamber into the inflatable air container through the air tube.

14. The device according to claim 1, further comprising an indicator for indicating operation of the pumping mechanism.

15. The device according to claim 14, wherein the indicator includes one or more of: an audible indicator for producing a sound and a visual indicator for producing a visual signal.

16. The device according to claim 1, further comprising a counter for displaying a value representative of an amount of therapeutic fluid delivered by operation of the device.

17. The device according to claim 16, wherein operation of the counter is based on operation of the power-transfer mechanism.

18. The device according to claim 16, wherein the counter comprises a mechanically detachable counter housing configured for attaching and detaching from the at least one housing.

19. The device according to claim 1, further comprising a measurement unit for determining an extent of fluid delivered.

20. The device according to claim 19, wherein the measurement unit comprises an optical unit for detecting one or more markings disposed on the actuator, wherein detection of the one or more markings corresponds to a pre-determined amount of fluid delivered.

21. The device according to claim 20, wherein the actuator comprises a gear having one or more openings extending from one surface of the gear to the other surface, and wherein the optical unit comprises: a light source for producing a light beam to illuminate one surface of the gear; and a light sensor for detecting light passing through the one or more openings.

22. The device according to claim 1, wherein the at least one housing is configured for receiving different size reservoirs.

23. The portable ambulatory therapeutic fluid delivery device according to claim 1, wherein the power-transfer mechanism comprises a user-actuated rotatable wheel.

24. The portable ambulatory therapeutic fluid delivery device according to claim 1, wherein the cradle comprises a well enabling passage of the cannula there through.

* * * * *