US009484965B2

(12) **United States Patent**
Li et al.

(10) **Patent No.: US 9,484,965 B2**
(45) **Date of Patent: Nov. 1, 2016**

(54) **TERMINAL AND METHOD FOR MAKING TOUCHSCREEN OF TERMINAL**

(71) Applicant: **Huawei Device Co., Ltd.**, Shenzhen (CN)

(72) Inventors: **Hui Li**, Beijing (CN); **Anmin Xu**, Beijing (CN)

(73) Assignee: **Huawei Device Co., Ltd.**, Shenzhen (CN)

(*) Notice: Subject to any disclaimer, the term of this patent is extended or adjusted under 35 U.S.C. 154(b) by 339 days.

(21) Appl. No.: **14/141,712**

(22) Filed: **Dec. 27, 2013**

(65) **Prior Publication Data**

US 2014/0113579 A1 Apr. 24, 2014

Related U.S. Application Data

(63) Continuation of application No. PCT/CN2011/076783, filed on Jul. 1, 2011.

(51) **Int. Cl.**

H04B 1/06	(2006.01)
H04B 1/08	(2006.01)
G06F 3/041	(2006.01)
G06F 1/16	(2006.01)
H01Q 1/44	(2006.01)

(52) **U.S. Cl.**

CPC ***H04B 1/086*** (2013.01); ***G06F 1/1605*** (2013.01); ***G06F 1/1698*** (2013.01); ***G06F 3/041*** (2013.01); ***H01Q 1/44*** (2013.01)

(58) **Field of Classification Search**

None

See application file for complete search history.

(56) **References Cited**

U.S. PATENT DOCUMENTS

9,246,214 B2 * 1/2016 Pope H01Q 1/243
2009/0122026 A1 * 5/2009 Oh G06F 1/1613 345/174
2010/0123632 A1 * 5/2010 Hill H01Q 1/243 343/702
2010/0231460 A1 * 9/2010 Chiang H01Q 1/2258 343/702

(Continued)

FOREIGN PATENT DOCUMENTS

CN 101620493 A 1/2010
CN 201698380 U 1/2011

(Continued)

OTHER PUBLICATIONS

Partial English Translation and Abstract of Chinese Patent Application No. CN201698380U, May 29, 2013, 11 pages.

(Continued)

Primary Examiner — Lana N Le

(74) *Attorney, Agent, or Firm* — Conley Rose, P.C.; Grant Rodolph; Nicholas K. Beaulieu

(57) **ABSTRACT**

A terminal and a method for making a touchscreen of the terminal, relate to the field of communications technologies and are invented for improving flexibility for receiving an frequency modulation (FM) broadcast. A terminal includes: a touchscreen; where the touchscreen includes a basal layer, a first conductive layer, a second conductive layer, and a touch layer, an antenna layer, and a separation layer, where the antenna layer is configured to dispose a FM antenna; the antenna layer and the separation layer are disposed between the basal layer and the first conductive layer or disposed between the second conductive layer and the touch layer, and the antenna layer is separated from the first conductive layer or the second conductive layer by using the separation layer. The embodiments of the present invention are mainly used in a terminal.

18 Claims, 3 Drawing Sheets

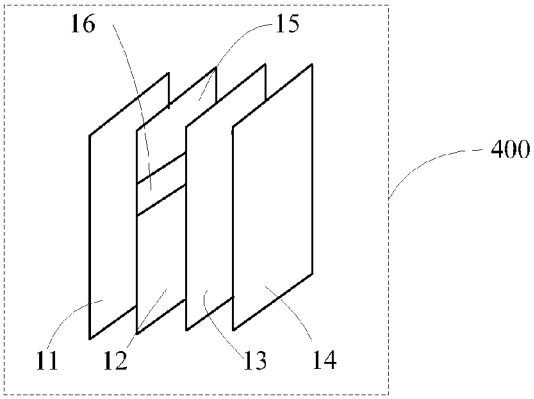

(56) **References Cited**

U.S. PATENT DOCUMENTS

2011/0050509	A1*	3/2011	Ayala Vazquez	H01Q 1/2266 455/575.1
2011/0241943	A1*	10/2011	Shiu	B23K 1/0016 343/700 MS
2012/0256850	A1*	10/2012	Hu	H01Q 1/243 345/173
2013/0168222	A1*	7/2013	Ning	H01H 9/0264 200/600
2014/0065948	A1*	3/2014	Huang	H05K 5/0086 455/7
2016/0064800	A1*	3/2016	de Jong	H01Q 1/243 455/575.1
2016/0093942	A1*	3/2016	Konanur	H01Q 1/2266 343/702
2016/0261023	A1*	9/2016	Di Nallo	H01Q 1/24

FOREIGN PATENT DOCUMENTS

CN	201773940	U	3/2011
JP	2007225644	A	9/2007
KR	20080090152	A	10/2008
KR	20080113506	A	12/2008

OTHER PUBLICATIONS

Foreign Communication From a Counterpart Application, PCT Application No. PCT/CN2011/076783, English Translation of International Search Report dated Mar. 22, 2012, 3 pages.

Foreign Communication From a Counterpart Application, PCT Application No. PCT/CN2011/076783, English Translation of Written Opinion dated Mar. 22, 2012, 20 pages.

Foreign Communication From a Counterpart Application, Chinese Application No. 201180001366.5, Chinese Office Action dated Oct. 22, 2012, 6 pages.

* cited by examiner

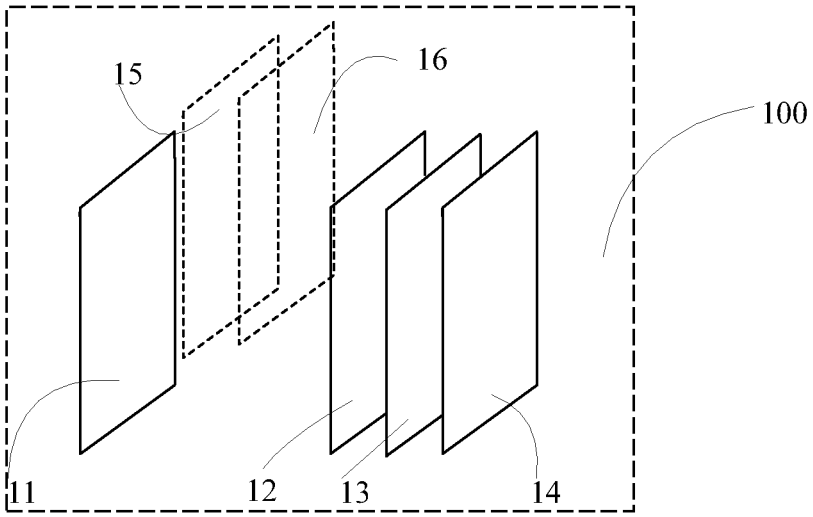

FIG. 1

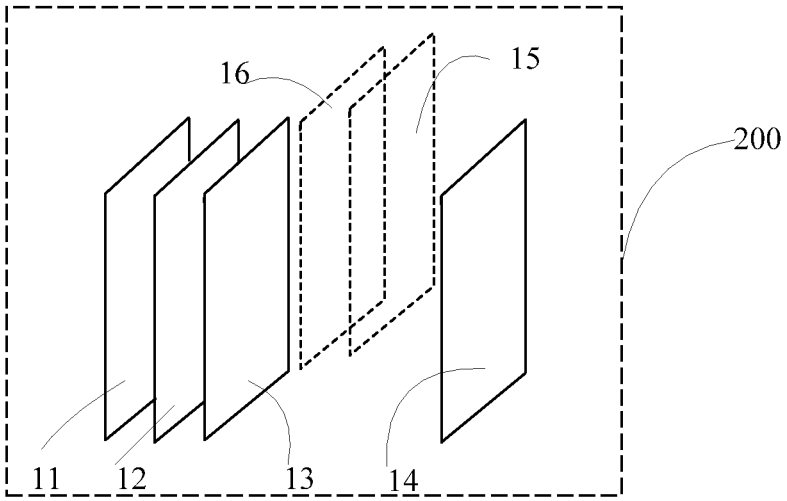

FIG. 2

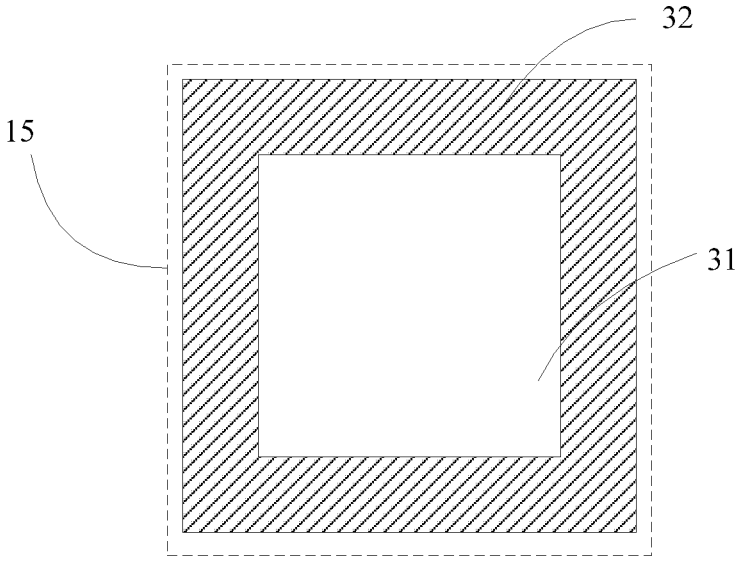

FIG. 3

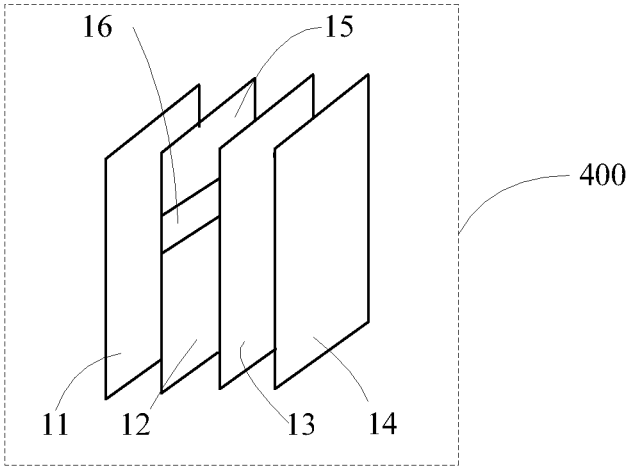

FIG. 4

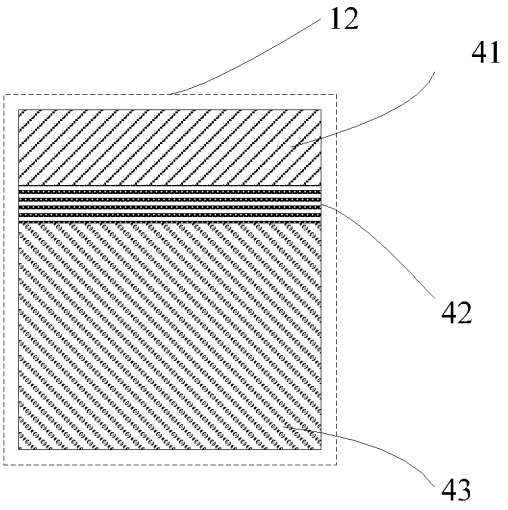

FIG. 5

TERMINAL AND METHOD FOR MAKING TOUCHSCREEN OF TERMINAL

CROSS-REFERENCE TO RELATED APPLICATION

This application is a continuation of International Application No. PCT/CN2011/076783, filed on Jul. 1, 2011, which is hereby incorporated by reference in its entirety.

STATEMENT REGARDING FEDERALLY SPONSORED RESEARCH OR DEVELOPMENT

Not applicable.

REFERENCE TO A MICROFICHE APPENDIX

Not applicable.

1. Technical Field

The present invention relates to the field of communications technologies, and in particular, to a terminal and a method for making a touchscreen of the terminal.

2. Background

Currently, with the development of communications technologies, most mobile terminals are disposed with an frequency modulation (FM) antenna. Generally, in order to well receive an FM broadcast on a frequency band from tens of megahertz to hundreds of megahertz, the FM antenna needs to be designed with a relatively large size. Therefore, a mobile terminal with an FM function usually takes earphones as the FM antenna.

However, when a user uses the mobile terminal to receive an FM broadcast, the user must carry the earphones. In addition, in order to ensure that the mobile terminal provides a good reception effect, the earphones need to be unfolded or stretched, which leads to bad flexibility for the terminal to receive the FM broadcast by using the FM antenna.

SUMMARY

Embodiments of the present invention provide a terminal and a method for making a touchscreen of the terminal, so as to improve flexibility for a terminal to receive an FM broadcast by using a FM antenna.

The embodiments of the present invention adopt the following technical solutions:

A terminal includes: a touchscreen; where the touchscreen includes: a basal layer, a first conductive layer, a second conductive layer, and a touch layer; and the touchscreen further includes: an antenna layer and a separation layer, where the antenna layer is configured to dispose a FM antenna; the antenna layer and the separation layer are disposed between the basal layer and the first conductive layer or between the second conductive layer and the touch layer; and the antenna layer and the first conductive layer or the second conductive layer are separated by using the separation layer.

Another terminal includes: a touchscreen; where the touchscreen includes: a basal layer, a first conductive layer, a second conductive layer, and a touch layer; and the touchscreen further includes: an antenna layer and a separation layer, where the antenna layer is configured to dispose a FM antenna; the first conductive layer or the second conductive layer is divided into a first area, a second area, and a third area; the antenna layer and the separation layer are disposed in the first area and the second area of the first conductive layer respectively, or the antenna layer and the separation layer are disposed in the first area and the second area of the second conductive layer respectively; and the separation layer in the second area separates the antenna layer in the first area from the third area.

A method for making a touchscreen of a terminal includes: forming a basal layer, a first conductive layer, a second conductive layer, and a touch layer; forming an antenna layer and a separation layer, where the antenna layer is configured to dispose a FM antenna; and disposing the antenna layer and the separation layer between the basal layer and the first conductive layer or between the second conductive layer and the touch layer, and separating the antenna layer from the first conductive layer or the second conductive layer by using the separation layer.

Another method for making a touchscreen of a terminal includes: forming a basal layer, a first conductive layer, a second conductive layer, a touch layer, an antenna layer, and a separation layer; where the antenna layer is configured to dispose a FM antenna; and dividing the first conductive layer or the second conductive layer into a first area, a second area, and a third area, disposing the antenna layer and the separation layer in the first area and the second area of the first conductive layer respectively, or disposing the antenna layer and the separation layer in the first area and the second area of the second conductive layer respectively, and separating, by the separation layer in the second area, the antenna layer in the first area from the third area.

In the terminal and the method for making a touchscreen of the terminal provided by the embodiments of the present invention, a FM antenna is directly disposed on a touchscreen of a terminal, so that when using the FM antenna to receive an FM broadcast, a user does not need to carry earphones and is not limited by an environmental factor such as time and place, thereby improving flexibility for the terminal to receive an FM broadcast by using the FM antenna. Therefore, by adopting the technical solutions in the embodiments of the present invention, flexibility for a terminal to receive an FM broadcast by using a FM antenna is improved.

BRIEF DESCRIPTION OF DRAWINGS

To illustrate the technical solutions in the embodiments of the present invention more clearly, accompanying drawings required for describing the embodiments are briefly introduced in the following. The accompanying drawings in the following description merely show some embodiments of the present invention, and persons of ordinary skill in the art may still derive other drawings according to these accompanying drawings without creative efforts.

FIG. **1** is a schematic structural diagram of a terminal touchscreen according to a first embodiment of the present invention;

FIG. **2** is another schematic structural diagram of a terminal touchscreen according to the first embodiment of the present invention;

FIG. **3** is schematic structural diagram of an antenna layer of a terminal touchscreen according to the first embodiment of the present invention;

FIG. **4** is another schematic structural diagram of a terminal touchscreen according to the first embodiment of the present invention; and

FIG. **5** is a schematic structural diagram of a first conductive layer of a terminal touchscreen according to the first embodiment of the present invention.

DESCRIPTION OF EMBODIMENTS

The following clearly describes the technical solutions in the embodiments of the present invention with reference to

the accompanying drawings in the embodiments of the present invention. The embodiments to be described are merely a part rather than all of the embodiments of the present invention. All other embodiments obtained by persons of ordinary skill in the art based on the embodiments of the present invention without creative efforts shall fall within the protection scope of the present invention.

To improve user experience of using a terminal, a first embodiment of the present invention provides a terminal, including: a touchscreen. The touchscreen includes a basal layer, a first conductive layer, a second conductive layer, and a touch layer; and the touchscreen further includes an antenna layer and a separation layer, where the antenna layer is configured to dispose a FM antenna. The antenna layer may be made of a material same as that for making a flexible printed circuit (FPC), or may be a metal wire. It should be noted that, when a thickness of the antenna layer is designed, it is necessary to take account of a feature of the touchscreen disposed with the antenna layer. Generally, the antenna layer may be better off by not being designed too thickly.

The antenna layer and the separation layer are disposed between the basal layer and the first conductive layer; or the antenna layer and the separation layer are disposed between the second conductive layer and the touch layer; and the antenna layer is separated from the first conductive layer or the second conductive layer by using the separation layer.

Or, the first conductive layer or the second conductive layer is divided into a first area, a second area, and a third area, where the antenna layer and the separation layer are disposed in the first area and the second area of the first conductive layer or the second conductive layer respectively, and the separation layer in the second area separates the antenna layer in the first area from the third area.

In this embodiment, the terminal may be a phone, a personal digital assistant (PDA), and a tablet, and so on.

It may be seen from the foregoing description that, a FM antenna is directly disposed on a touchscreen of a terminal, so that when using the FM antenna to receive an FM broadcast, a user does not need to carry earphones and is not limited by an environmental factor such as time and place, thereby improving flexibility for the terminal to receive an FM broadcast by using the FM antenna, and further enhancing user experience of using the terminal. Therefore, by adopting the terminal in the embodiment of the present invention, flexibility for a terminal to receive an FM broadcast by using a FM antenna is improved.

Specifically, according to a difference in positions where the antenna layer and the separation layer are disposed, the touchscreen of the terminal may include the following several different structures.

Manner 1: As shown in FIG. **1**, a touchscreen of a terminal **100** includes: a basal layer **11**, a first conductive layer **12**, a second conductive layer **13**, a touch layer **14**, an antenna layer **15**, and a separation layer **16**. The antenna layer **15** and the separation layer **16** are disposed between the basal layer **11** and the first conductive layer **12**. In this case, the basal layer **11**, the first conductive layer **12**, the second conductive layer **13**, the touch layer **14**, the antenna layer **15**, and the separation layer **16** are disposed according to a sequence as follows: the basal layer **11**, the antenna layer **15**, the separation layer **16**, the first conductive layer **12**, the second conductive layer **13**, and the touch layer **14**.

Manner 2: As shown in FIG. **2**, a touchscreen of a terminal **200** includes: a basal layer **11**, a first conductive layer **12**, a second conductive layer **13**, a touch layer **14**, an antenna layer **15**, and a separation layer **16**. The antenna layer **15** and the separation layer **16** are disposed between the second conductive layer **13** and the touch layer **14**. In this case, the basal layer **11**, the first conductive layer **12**, the second conductive layer **13**, the touch layer **14**, the antenna layer **15**, and the separation layer **16** are disposed according to a sequence as follows: the basal layer **11**, the first conductive layer **12**, the second conductive layer **13**, the separation layer **16**, the antenna layer **15**, and the touch layer **14**.

Specifically, as shown in FIG. **3**, in the manner 1 or the manner 2, the antenna layer **15** may include a visible area **31** and an invisible area **32**. The visible area **31** may be made of glass or plastic with high light transmittance, so that light may transmit through the touchscreen. The invisible area **32** is configured to dispose the FM antenna. Specifically, a groove may be provided in the invisible area **32**, and the FM antenna may be disposed in the groove, so that the antenna layer has a smooth surface to closely attach to other layers.

Manner 3: The antenna layer **15** and the separation layer **16** may be disposed in the first conductive layer or the second conductive layer.

That the antenna layer and the separation layer are disposed in the first conductive layer is taken as an example. As shown in FIG. **4**, a touchscreen of a terminal **400** includes: a basal layer **11**, a first conductive layer **12**, a second conductive layer **13**, a touch layer **14**, an antenna layer **15**, and a separation layer **16**. The antenna layer **15** and the separation layer **16** are disposed in the first conductive layer **12**.

Specifically, as shown in FIG. **5**, the first conductive layer **12** is divided into a first area **41**, a second area **42**, and a third area **43**. The antenna layer **15** and the separation layer **16** are disposed in the first area **41** and the second area **42** of the first conductive layer **12** respectively, and the separation layer **16** in the second area **42** separates the antenna layer **15** in the first area **41** from the third area **43**. The first area **41**, the second area **42**, and the third area **43** do not specifically refer to a certain area of the first conductive layer **12**. It is only required that an area where a separation layer **16** is disposed can separate an area where an antenna layer **15** is disposed from a remaining area of the first conductive layer **12**.

In the manner 3, the first conductive layer **12** is still taken as an example for description. Referring to FIG. **5**, the third area **43** may be set to a visible area **31**, and the first area **41** and the second area **42** are set to an invisible area **32**. Similarly, a groove may be provided in the third area **43** of the invisible area **32** of the first conductive layer **12**, and the FM antenna may be disposed in the groove, so that the first conductive layer **12** has a smooth surface to closely attach to other layers.

In addition, in the manner 3, when the antenna layer **15** and the separation layer **16** are disposed in the first conductive layer **12** or the second conductive layer **13**, the touchscreen is thinner, but an area for sensing a touch operation of a user becomes smaller. For example, in FIG. **5**, an area of the third area **43** is smaller than that of the first conductive layer **12**.

A second embodiment of the present invention provides a method for making a touchscreen of a terminal, where the method includes: successively forming a basal layer **11**, a first conductive layer **12**, a second conductive layer **13**, and a touch layer **14**; forming an antenna layer **15** and a separation layer **16**, where the antenna layer **15** is configured to dispose a FM antenna; and disposing the antenna layer **15** and the separation layer **16** between the basal layer **11** and the first conductive layer **12** or between the second conductive layer **13** and the touch layer **14**, and separating the antenna layer **15** from the first conductive layer **12** or the

second conductive layer **13** by using the separation layer **16**; or, dividing the first conductive layer **12** or the second conductive layer **13** into a first area **41**, a second area **42**, and a third area **43**, and disposing the antenna layer **15** and the separation layer **16** in the first area **41** and the second area **42** of the first conductive layer **12** or the second conductive layer **13**, respectively, and separating, by the separation layer **16** in the second area **42**, the antenna layer **15** in the first area **41** from the third area **43**.

In this embodiment, the antenna layer **15** and the separation layer **16** may be attached between the basal layer **11** and the first conductive layer **12**, and the separation layer **16** is configured to separate the antenna layer **15** from the first conductive layer **12**. In this case, referring to FIG. **1**, the basal layer **11**, the first conductive layer **12**, the second conductive layer **13**, the touch layer **14**, the antenna layer **15**, and the separation layer **16** are disposed according to a sequence as follows: the basal layer, the antenna layer, the separation layer, the first conductive layer, the second conductive layer, and the touch layer.

Or, the antenna layer **15** and the separation layer **16** may be attached between the second conductive layer **13** and the touch layer **14**, and the separation layer **16** is configured to separate the second conductive layer **13** from the antenna layer **15**. In this case, referring to FIG. **2**, the basal layer **11**, the first conductive layer **12**, the second conductive layer **13**, the touch layer **14**, the antenna layer **15**, and the separation layer **16** are disposed according to a sequence as follows: the basal layer, the first conductive layer, the second conductive layer, the separation layer, the antenna layer, and the touch layer.

Referring to FIG. **3**, when the antenna layer and the separation layer are disposed between the basal layer and the first conductive layer, or disposed between the second conductive layer and the touch layer, the antenna layer **15** may be divided into a visible area **31** and an invisible area **32**. The visible area **31** may be made of glass or plastic with high light transmittance, so that light may transmit through the touchscreen. The invisible area **32** is configured to dispose the FM antenna. Specifically, a groove may be provided in the invisible area **32**, and the FM antenna may be disposed in the groove, so that the antenna layer has a smooth surface to closely attach to other layers.

Or, the antenna layer and the separation layer may be disposed in the first conductive layer or the second conductive layer. For example, referring to FIG. **5**, the first conductive layer is divided into a first area, a second area, and a third area. The antenna layer and the separation layer are disposed in the first area and the second area of the first conductive layer respectively, and the separation layer in the second area separates the antenna layer in the first area form the third area.

When the antenna layer and the separation layer are disposed in the first conductive layer or the second conductive layer, the first conductive layer **12** is still taken as an example for description. Referring to FIG. **5**, an area where the third area **43** is located may be taken as a visible area, and an area where the first area **41** and the second area **42** are located may be taken as an invisible area. Similarly, a groove may be provided in the third area **43** of the invisible area of the first conductive layer **12**, and the FM antenna may be disposed in the groove, so that the first conductive layer **12** has a smooth surface to closely attach to other layers.

It may be seen from the foregoing description that, a FM antenna is directly disposed on a touchscreen of a terminal, so that when using the FM antenna to receive an FM broadcast, a user does not need to carry earphones and is not limited by an environmental factor such as time and place, thereby improving flexibility for the terminal to receive an FM broadcast by using the FM antenna, and further enhancing user experience of using the terminal. Therefore, by adopting the technical solutions in the embodiments of the present invention, flexibility for a terminal to receive an FM broadcast by using a FM antenna is improved.

To sum up, by adopting the technical solutions in the embodiments of the present invention, flexibility for a terminal to receive an FM broadcast by using a FM antenna is improved.

The foregoing description is merely specific implementation manners of the present invention, but is not intended to limit the protection scope of the present invention. Any variation or replacement readily figured out by persons skilled in the art within the technical scope disclosed in the present invention shall fall within the protection scope of the present invention. Therefore, the protection scope of the present invention shall be subject to the protection scope of the claims.

What is claimed is:

1. A terminal, comprising:

a touchscreen,

wherein the touchscreen comprises:

a basal layer;

a first conductive layer;

a second conductive layer;

a touch layer;

an antenna layer; and

a separation layer,

wherein the antenna layer is configured to dispose a frequency modulation (FM) antenna,

wherein the antenna layer comprises an inner portion and an outer portion,

wherein the inner portion of the antenna layer is visible and is made of a material with high light transmittance that is configured to transmit light through the touchscreen,

wherein the outer portion of the antenna layer is invisible and comprises a groove,

wherein the FM antenna is disposed in the groove of the outer portion of the antenna layer,

wherein the separation layer is configured to separate the antenna layer from either the first conductive layer or the second conductive layer, and

wherein the antenna layer and the separation layer are either disposed between the basal layer and the first conductive layer or disposed between the second conductive layer and the touch layer.

2. The terminal according to claim **1**, wherein when the antenna layer and the separation layer are disposed between the basal layer and the first conductive layer, the basal layer, the first conductive layer, the second conductive layer, the touch layer, the antenna layer, and the separation layer are disposed according to a sequence as follows: the basal layer, the antenna layer, the separation layer, the first conductive layer, the second conductive layer, and the touch layer.

3. The terminal according to claim **1**, wherein when the antenna layer and the separation layer are disposed between the touch layer and the second conductive layer, the basal layer, the first conductive layer, the second conductive layer, the touch layer, the antenna layer, and the separation layer are disposed according to a sequence as follows: the basal layer, the first conductive layer, the second conductive layer, the separation layer, the antenna layer, and the touch layer.

4. The terminal according to claim **1**, wherein the separation layer is configured to separate the antenna layer from the first conductive layer, and wherein the antenna layer and the separation layer are disposed between the basal layer and the first conductive layer.

5. The terminal according to claim **1**, wherein the separation layer is configured to separate the antenna layer from the second conductive layer, and wherein the antenna layer and the separation layer are disposed between the second conductive layer and the touch layer.

6. The terminal according to claim **1**, wherein the material with high light transmittance comprises glass.

7. The terminal according to claim **1**, wherein the material with high light transmittance comprises plastic.

8. The terminal according to claim **1**, wherein the antenna layer is made of a flexible printed circuit material.

9. The terminal according to claim **1**, wherein the antenna layer is made of a metal wire.

10. The terminal according to claim **1**, wherein the inner portion of the antenna layer has a rectangular shape, wherein the outer portion of the antenna layer surrounds the inner portion of the antenna layer and has a rectangular outer boundary and a rectangular inner boundary.

11. A method for making a touchscreen of a terminal, comprising:

forming a basal layer, a first conductive layer, a second conductive layer, and a touch layer;

forming an antenna layer and a separation layer, wherein the antenna layer is configured to dispose a frequency modulation (FM) antenna, wherein the antenna layer comprises an inner portion and an outer portion, wherein the inner portion of the antenna layer is visible and is made of a material with high light transmittance that is configured to transmit light through the touchscreen, wherein the outer portion of the antenna layer is invisible and comprises a groove, wherein the FM antenna is disposed in the groove of the outer portion of the antenna layer, wherein the separation layer is configured to separate the antenna layer from either the first conductive layer or the second conductive layer; and

disposing the antenna layer and the separation layer either between the basal ayer and the first conductive layer or between the second conductive layer and the touch layer.

12. The method according to claim **11**, wherein disposing the antenna layer and the separation layer either between the basal layer and the first conductive layer or between the second conductive layer and the touch layer comprises attaching the antenna layer and the separation layer between the basal layer and the first conductive layer, wherein the separation layer is configured to separate the antenna layer from the first conductive layer, and wherein the basal layer, the first conductive layer, the second conductive layer, the touch layer, the antenna layer, and the separation layer are attached according to a sequence as follows: the basal layer, the antenna layer, the separation layer, the first conductive layer, the second conductive layer, and the touch layer.

13. The method according to claim **11**, wherein disposing the antenna layer and the separation layer either between the basal layer and the first conductive layer or between the second conductive layer and the touch layer comprises attaching the antenna layer and the separation layer between the second conductive layer and the touch layer, wherein the separation layer is configured to separate the second conductive layer from the antenna layer, and wherein the antenna layer and the separation layer are disposed between the touch layer and the second conductive layer, and the basal layer, the first conductive layer, the second conductive layer, the touch layer, the antenna layer, and the separation layer are attached according to a sequence as follows: the basal layer, the first conductive layer, the second conductive layer, the separation layer, the antenna layer, and the touch layer.

14. The method according to claim **11**, wherein the material with high light transmittance comprises glass.

15. The method according to claim **11**, wherein the material with high light transmittance comprises plastic.

16. The method according to claim **11**, wherein the antenna layer is made of a flexible printed circuit material.

17. The method according to claim **11**, wherein the antenna layer is made of a metal wire.

18. The method according to claim **11**, wherein the inner portion of the antenna layer has a rectangular shape, wherein the outer portion of the antenna layer surrounds the inner portion of the antenna layer and has a rectangular outer boundary and a rectangular inner boundary.

* * * * *