US009179563B2

(12) **United States Patent**
Qin et al.

(10) **Patent No.: US 9,179,563 B2**
(45) **Date of Patent: Nov. 3, 2015**

(54) **ELECTRONIC DEVICE**

(71) Applicants: **HON HAI PRECISION INDUSTRY CO., LTD.**, New Taipei (TW); **AMBIT MICROSYSTEMS (SHANGHAI) LTD.**, Shanghai (CN)

(72) Inventors: **Dong Qin**, Shanghai (CN); **Hong-Xia Sheng**, Shanghai (CN); **Hui Hu**, Shanghai (CN)

(73) Assignees: **AMBIT MICROSYSTEMS (SHANGHAI) LTD.**, Shanghai (CN); **HON HAI PRECISION INDUSTRY CO., LTD.**, New Taipei (TW)

(*) Notice: Subject to any disclaimer, the term of this patent is extended or adjusted under 35 U.S.C. 154(b) by 100 days.

(21) Appl. No.: **14/160,738**

(22) Filed: **Jan. 22, 2014**

(65) **Prior Publication Data**

US 2014/0211383 A1 Jul. 31, 2014

(30) **Foreign Application Priority Data**

Jan. 31, 2013 (CN) 2013 2 0054959

(51) **Int. Cl.**
H05K 5/00 (2006.01)
H05K 5/02 (2006.01)
H01Q 1/12 (2006.01)

(52) **U.S. Cl.**
CPC ***H05K 5/0247*** (2013.01); ***H01Q 1/1214*** (2013.01)

(58) **Field of Classification Search**
CPC combination set(s) only.
See application file for complete search history.

(56) **References Cited**

U.S. PATENT DOCUMENTS

2,965,340	A *	12/1960	Chadowski	248/539
6,140,971	A *	10/2000	Kitamura	343/702
7,422,189	B2 *	9/2008	Militz et al.	248/539
7,532,167	B2 *	5/2009	Liang et al.	343/702
7,825,872	B2 *	11/2010	Guo	343/880
2011/0080697	A1 *	4/2011	Ishikawa	361/679.01
2014/0022129	A1 *	1/2014	Yoon	343/713

* cited by examiner

Primary Examiner — Lisa Lea Edmonds
(74) *Attorney, Agent, or Firm* — Novak Druce Connolly Bove + Quigg LLP

(57) **ABSTRACT**

An electronic device includes a case and a connector. The case includes a first sidewall, a second sidewall perpendicularly connected to the first sidewall, and a pair of latching protrusions. A through hole is defined in the first sidewall. The pair of latching protrusions is located on the two opposite sides of the through hole and perpendicular extended from the second sidewall. Each of the latching protrusions comprises a first side near to the through hole and a second side away from the through hole. The connector is inserted in the case. The connector includes a shaft portion and a flange radially extending from the shaft portion. The shaft portion is inserted into the through hole. Thus, securing the connector from falling.

8 Claims, 7 Drawing Sheets

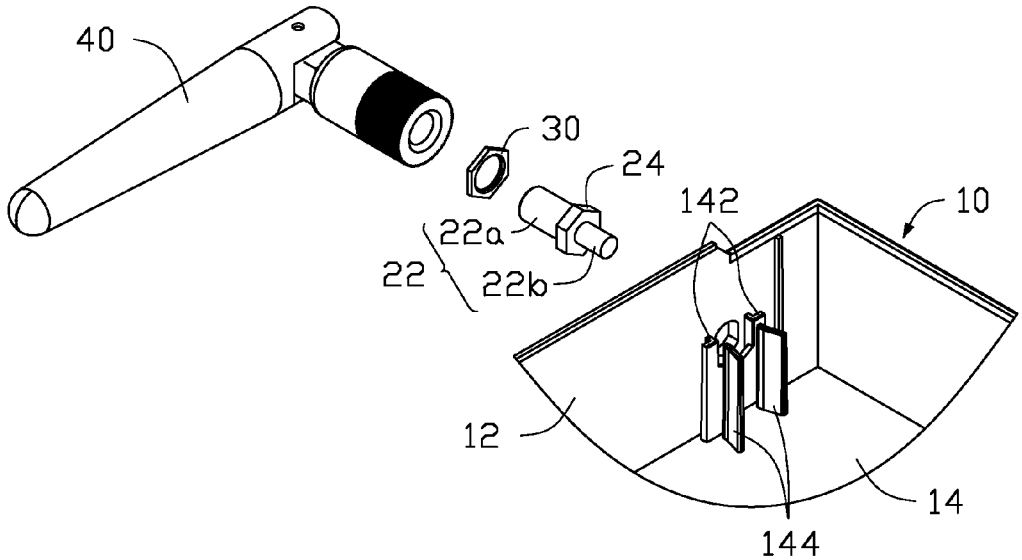

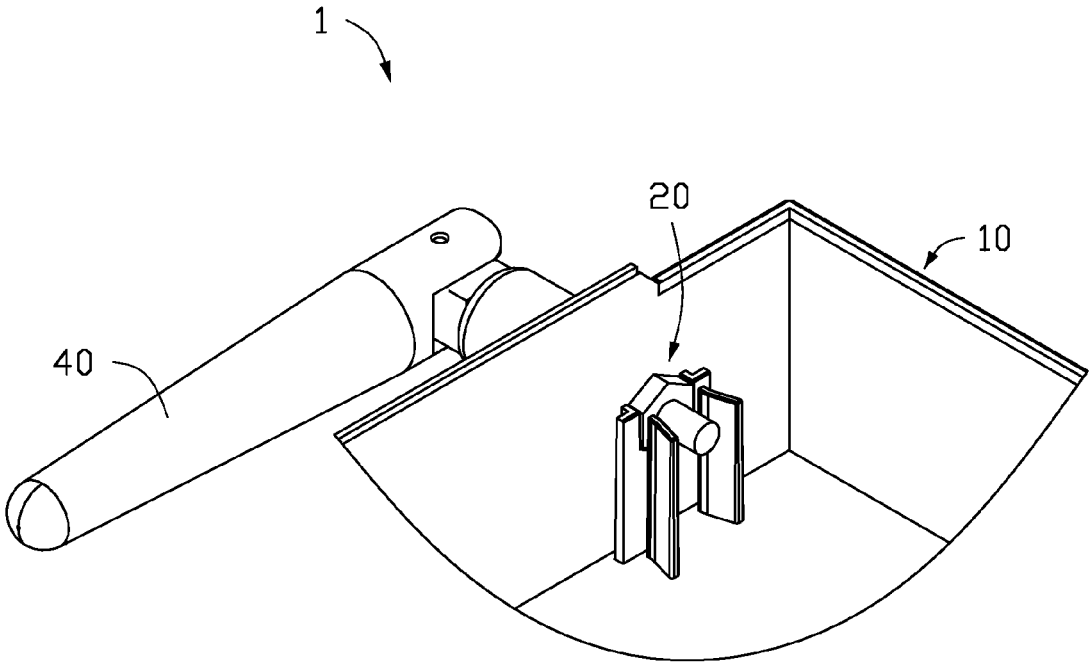

FIG. 1

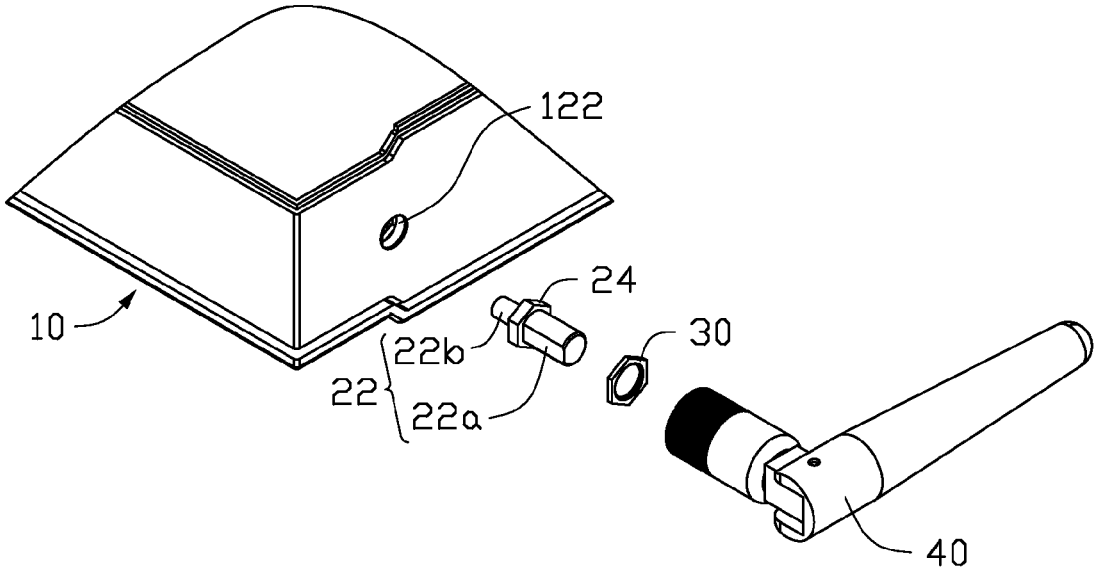

FIG. 2

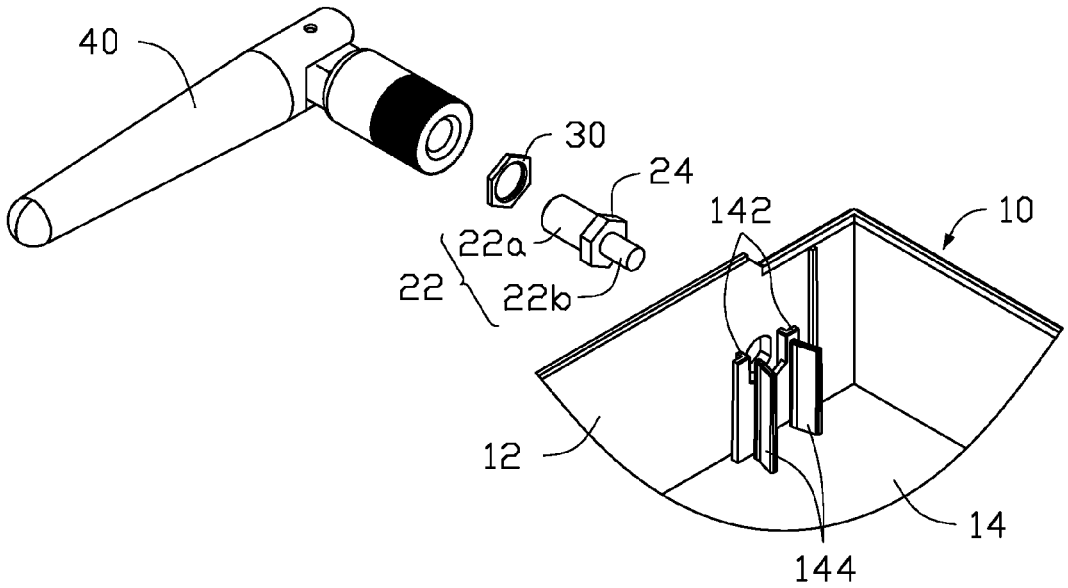

FIG. 3

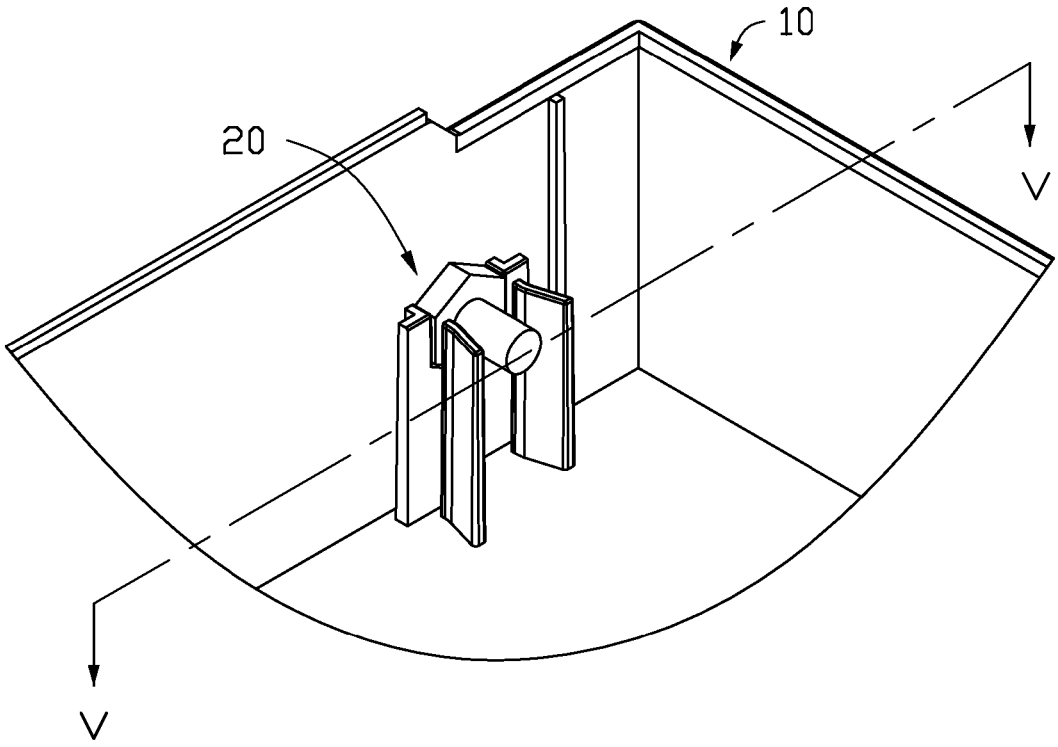

FIG. 4

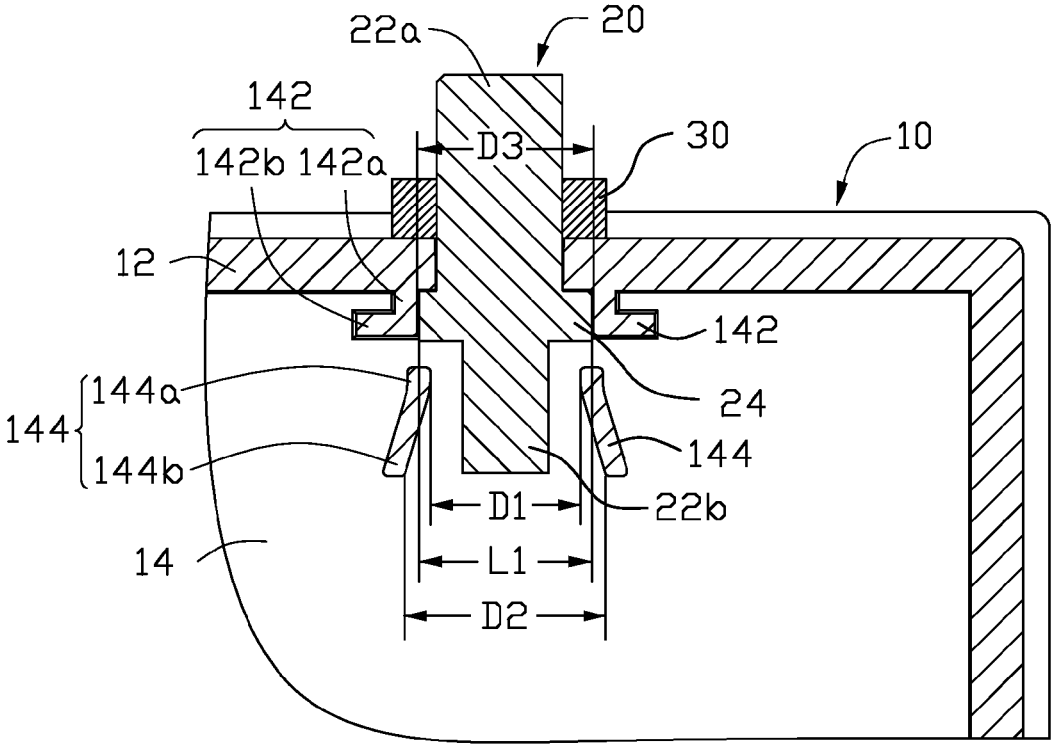
22a
20
142
142b 142a
D3
30
10
12
142
144a
144
144b
24
144
D1
22b
14
L1
D2

FIG. 5

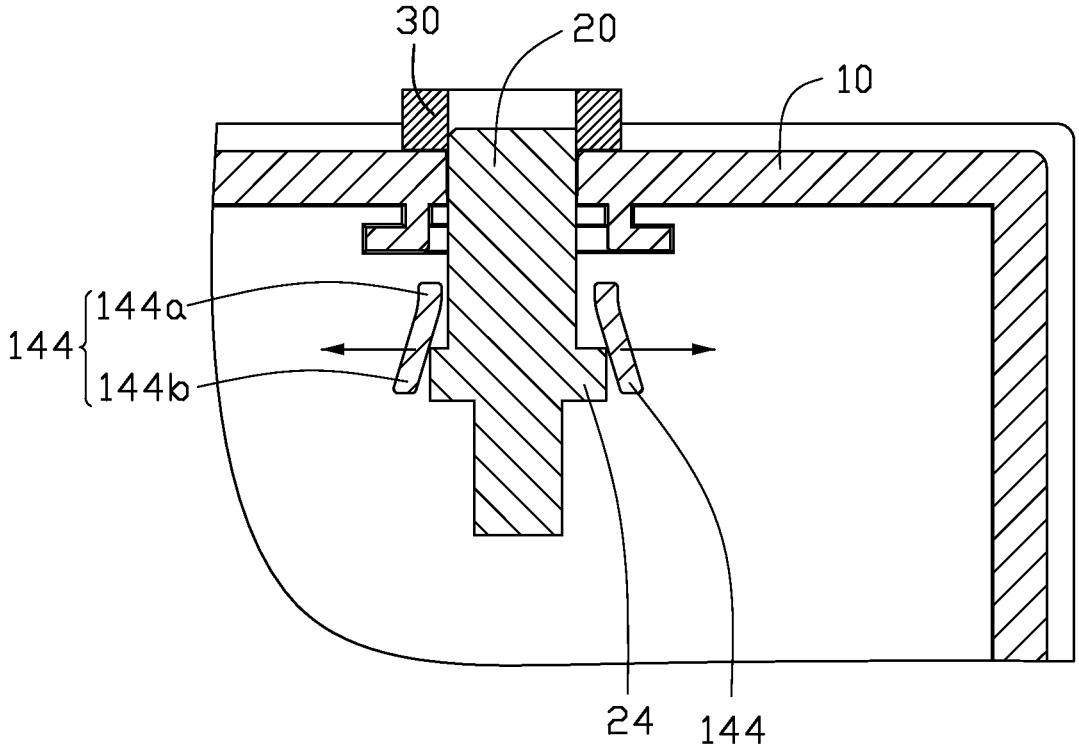

FIG. 6

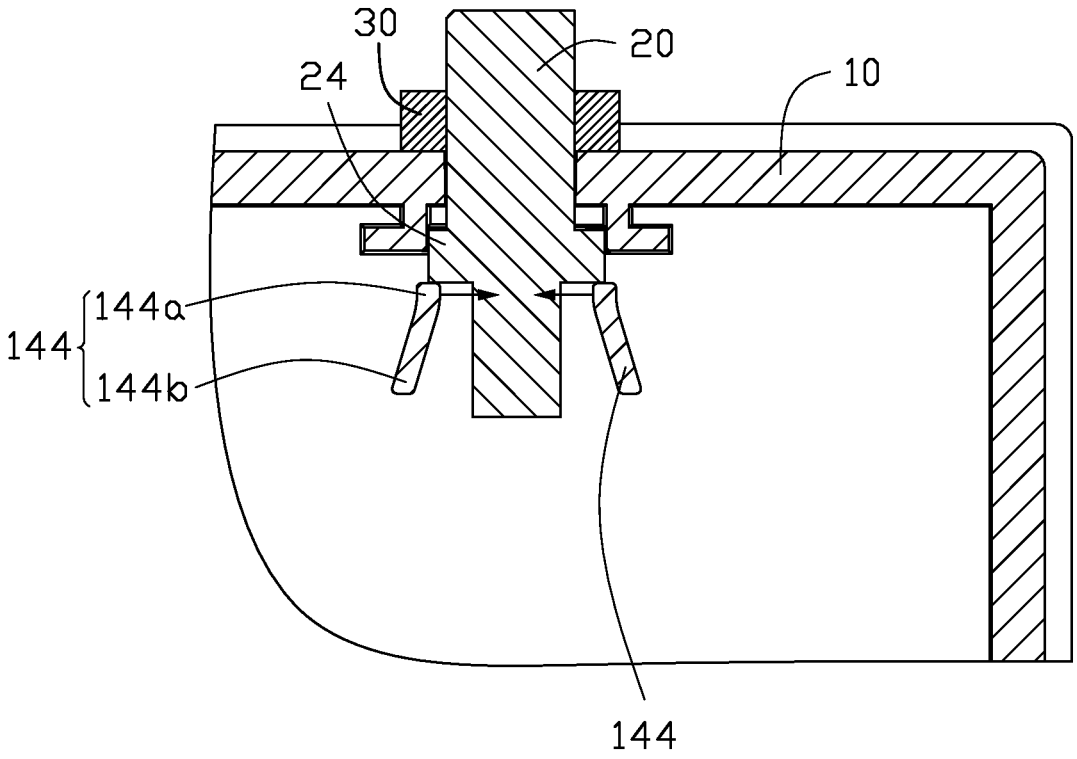

FIG. 7

ELECTRONIC DEVICE

BACKGROUND

1. Technical Field

The disclosure generally relates to fastening structures, and more particularly, to an electronic device including a fastening structure to fix a connector.

2. Description of Related Art

An antenna is assembled to an electronic device using a connector fastened on an inner sidewall of the electronic device. However, the electronic device has no fastening structure to secure the connectors. Thus, the connector may easily fall from the connection terminal and inside the electronic device, which leads to a low assembly efficiency case.

Therefore, it is desirable to provide a means which can overcome the above-mentioned problems.

BRIEF DESCRIPTION OF THE DRAWINGS

Many aspects of the disclosure can be better understood with reference to the following drawings. The components in the drawings are not necessarily drawn to scale, the emphasis instead being placed upon clearly illustrating the principles of the disclosure. Moreover, in the drawings, like reference numerals designate corresponding parts throughout the several views.

FIG. **1** is a schematic, isometric view of an embodiment of an electronic device.

FIG. **2** is an exploded, isometric view of the electronic device of FIG. **1** but shown in another aspect.

FIG. **3** is an exploded, isometric view of the electronic device of FIG. **1**.

FIG. **4** is an assembled, isometric view of the electronic device, the electronic device including a connector inserted in a case.

FIG. **5** is a cross-sectional view of the electronic device taken along line V-V of FIG. **4**.

FIG. **6** is similar to FIG. **5**, with the connector inserted into the case from a wide side of a pair of latching protrusions.

FIG. **7** is similar to FIG. **5**, but with the connector moved towards a narrow side of the pair of latching protrusions.

DETAILED DESCRIPTION

The disclosure is illustrated by way of example and not by way of limitation in the figures of the accompanying drawings in which like references indicate similar elements. It should be noted that references to "an" or "one" embodiment in this disclosure are not necessarily to the same embodiment, and such references can mean "at least one."

FIGS. **1** to **5** show an embodiment of an electronic device **1**. The electronic device **1** includes a case **10**, a connector **20**, a nut **30**, and an antenna **40** for transmitting and receiving signals. The connector **20** connects the antenna **40** with the electronic device **1**. The nut **30** fastens the connector **20** to the electronic device **1**.

The case **10** includes a first sidewall **12**, a second sidewall **14**, a pair of positioning protrusions **142** and a pair of latching protrusions **144**. The second sidewall **14** is connected substantially perpendicularly to the first sidewall **12**. A through hole **122** is defined in the first sidewall **12** to receive the connector **200**.

The pair of positioning protrusions **142** is located on the two opposite sides of the through hole **122** on the first sidewall **12**. Each of the positioning protrusions **142** includes a connecting portion **142***a* and an extending portion **142***b*. The connecting portions **142***a* extend from an inner surface of the first sidewall **12**. The extending portions **142***b* extend from a distal end of each connecting portion **142***a* along two opposite directions substantially perpendicular to the connecting portions **142***a*.

The pair of latching protrusions **144** extends substantially perpendicularly from the second sidewall **14** aligned towards the pair of positioning protrusions **142**. The latching protrusions **144** can be substantially rectangular. Each of the latching protrusions **144** includes a first side **144***a* near the through hole **122** and a second side **144***b* away from the through hole **122**. The distance between the pair of latching protrusions **144** gradually increases from the first sides **144***a* to the second sides **144***b*. The pair of the latching protrusions **144** are each curved towards opposite directions. The latching protrusions **144** are made of a resilient material and deformable if an external force is manually applied.

The connector **20** includes a shaft portion **22** and a flange **24** extending radially from a middle part of the shaft portion **22**. The shaft portion **22** includes a first part **22***a* and a second part **22***b* at two opposite sides of the flange **24**. A radial length L1 of the flange **24** is greater than a first distance D1 between the two first sides **144***a* of the pair of the latching protrusions **144**, but is less than a second distance D2 between the two second sides **144***b* of the pair of the latching protrusions **144**. Moreover, the radial length L1 of the flange **24** is less than a third distance D3 between the two connecting portions **142***a* of the positioning protrusions **142**.

In assembly, the first part **22***a* of the connector **20** extends out of the case **10** through the through hole **122**. The nut **30** is sleeved on the first part **22***a* from outside of the case **10** to fasten the connector **20** to the first sidewall **12**. The antenna **40** is connected to the first part **22***a* of the shaft portion **22**.

FIG. **6** shows that when the connector **20** is inserted into the through hole **122** from the second sides **144***b* to the first sides **144***a*, the first sides **144***a* resiliently deform to allow the flange **24** to pass through a gap between the first sides **144***a*. The latching protrusions **144** restore to their original shape to prevent the connector **20** from passing back through the gap between the first sides **144***a*. The flange **24** is positioned between the pair of positioning protrusions **142** when the connector **20** is fastened to the first sidewall **12** by the nut **30** screwing on the first part **22** of the shaft portion **22**.

FIG. **7** shows that when the connector **20** is moving towards the first sides **144***a* of the latching protrusions **144**, because of the first distance D1 is narrower than the radial length L1, the latching protrusions **144** will stop the connector **20**. Moreover, the flange **24** will shorten the first distance D1 by pushing the first sides **144***a* of latching protrusions **144**, thus stopping the flange **24** from falling inside the case **10**.

The latching protrusions **144** fix the connector **20** on the case **10**. In addition, the flange **24** of the connector **20** is fixed between the latching protrusions **144** and the first sidewall **12**, securing the connector **20** from falling inside the case **10**. Even if the antenna **40** and the nut **30** are unscrewed from the connector **20**, the connector **20** will not fall inside the case **10**.

It is believed that the present embodiments and their advantages will be understood from the foregoing description, and it will be apparent that various changes may be made thereto without departing from the spirit and scope of the disclosure or sacrificing all of its material advantages, the examples hereinbefore described merely being preferred or exemplary embodiments of the disclosure.

What is claimed is:

1. An electronic device comprising a case and a connector, wherein the case comprises a first sidewall, a second sidewall connected substantially perpendicularly to the first sidewall, a

pair of latching protrusions, and a through hole defined in the first sidewall, the pair of latching protrusions is located on two opposite sides of the through hole and extend substantially perpendicularly from the second sidewall, the latching protrusions are made of resilient material, each of the latching protrusions comprises a first side near to the through hole and a second side away from the through hole; the connector comprises a shaft portion and a flange extending radially from the shaft portion, the shaft portion is inserted into the through hole, the flange is fixed between the latching protrusions and the first sidewall, and a radial length of the flange is greater than a distance between the two first sides of the latching protrusions, but is less than a distance between the two second sides of the latching protrusions.

2. The electronic device of claim **1**, wherein the latching protrusions are each curved towards opposite directions.

3. The electronic device of claim **1**, wherein the latching protrusions are substantially rectangular.

4. The electronic device of claim **1**, wherein the case further comprises a pair of positioning protrusions located on the two opposite side of the through hole on the first sidewall.

5. The electronic device of claim **4**, wherein each of the positioning protrusions comprises a connecting portion and a extending portion, the connecting portions extend from the inner surface of the first sidewall, the extending portions extend from a distal end of each connecting portion along two opposite directions substantially perpendicular to the connecting portions.

6. The electronic device of claim **5**, wherein the radial length of the flange is less than a distance between the two connecting portions.

7. The electronic device of claim **1**, wherein the electronic device further comprises a nut, the shaft portion comprises a first part and a second part at two opposite sides of the flange, the first part extends out of the case by passing through the through hole, and the nut is sleeved on the first part from outside of the case to fasten the connector to the first sidewall.

8. The electronic device of claim **7**, wherein the electronic device further comprises an antenna for transmitting and receiving signals, and the antenna is connected to the first part of the shaft portion.

* * * * *