US009168662B1

(12) **United States Patent**
Brown

(10) **Patent No.: US 9,168,662 B1**
(45) **Date of Patent: Oct. 27, 2015**

(54) **LIGHTED RAZOR**

(71) Applicant: **Kevin Brown**, Greenville, NC (US)

(72) Inventor: **Kevin Brown**, Greenville, NC (US)

(*) Notice: Subject to any disclaimer, the term of this patent is extended or adjusted under 35 U.S.C. 154(b) by 209 days.

(21) Appl. No.: **13/692,624**

(22) Filed: **Dec. 3, 2012**

(51) **Int. Cl.**

B26B 19/00	(2006.01)
B26B 21/00	(2006.01)
B26B 19/46	(2006.01)
B26B 21/46	(2006.01)

(52) **U.S. Cl.**
CPC ***B26B 21/46*** (2013.01)

(58) **Field of Classification Search**
CPC B26B 21/46
USPC 30/526, 537, 32, 34.05; 362/115
See application file for complete search history.

(56) **References Cited**

U.S. PATENT DOCUMENTS

1,180,686	A		4/1916	Allport	
1,223,305	A		4/1917	Allport	
1,258,058	A	*	3/1918	Stuefer	362/115
1,429,760	A		9/1922	Norquist	
1,862,274	A	*	6/1932	Mendelsohn	362/115
1,900,965	A		3/1933	Weiss	
1,950,789	A	*	3/1934	Eells	362/115
2,309,035	A	*	1/1943	Beam	362/115
2,530,069	A		11/1950	Moore	
3,121,286	A	*	2/1964	Schneiderman	30/34.05
4,028,540	A	*	6/1977	Key et al.	362/118
4,094,062	A	*	6/1978	Papanikolaou	30/34.05
4,473,943	A	*	10/1984	Papanikolaou	30/34.05
5,299,104	A	*	3/1994	Parmentier	362/115
5,528,477	A	*	6/1996	Carmo	362/260
5,582,476	A	*	12/1996	Hansen	362/115
6,227,676	B1	*	5/2001	Sneddon	362/115
6,280,051	B1		8/2001	Wallach	
6,406,157	B1	*	6/2002	Audet	362/115
6,478,442	B2	*	11/2002	Chen	362/119
6,915,576	B2	*	7/2005	Brzezinski	30/34.05
7,473,007	B1	*	1/2009	Wang	362/187
7,510,296	B2	*	3/2009	Nevin	362/119
7,581,846	B2	*	9/2009	Hayman et al.	362/119
7,652,436	B2		1/2010	Dowling et al.	
7,739,797	B2	*	6/2010	Rawle	30/34.1
8,061,041	B2	*	11/2011	Jessemey et al.	30/45
8,065,802	B2	*	11/2011	Oglesby et al.	30/50
8,089,227	B2	*	1/2012	Baertschi et al.	318/119
8,118,444	B2	*	2/2012	Nevin	362/119
2007/0107229	A1	*	5/2007	Ribal	30/34.05
2008/0134511	A1	*	6/2008	Salvatore	30/32

FOREIGN PATENT DOCUMENTS

GB	421345	A	12/1934
GB	2430906	A	4/2007

* cited by examiner

Primary Examiner — Ghassem Alie
Assistant Examiner — Bharat C Patel
(74) *Attorney, Agent, or Firm* — Coats & Bennett, P.L.L.C.

(57) **ABSTRACT**

A lighted razor that directs light in one or more different directions. The directed light enables a user to shave when in dark environments, and to adjust the amount of light that emanates from the razor. The lighted razor generally includes a body with a blade for shaving. A light is attached to the body, and may be powered and controlled by mechanisms in the body. A sleeve is adjustably positioned over the light to adjust an amount of light emanating from the razor.

12 Claims, 9 Drawing Sheets

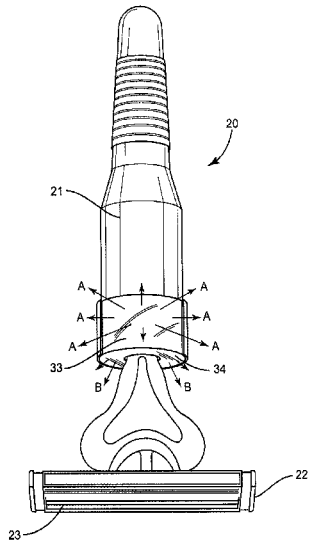

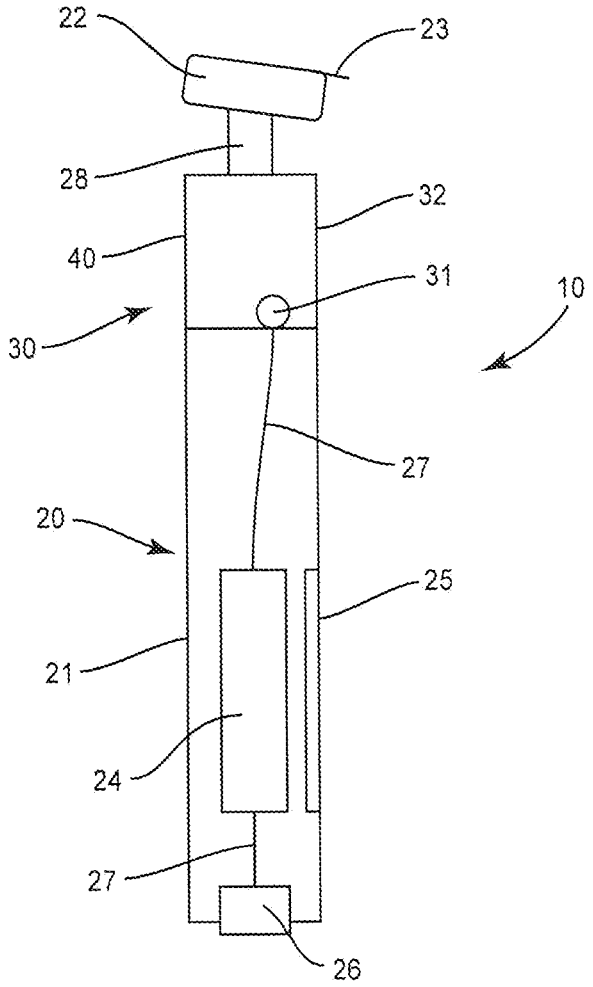

FIG. 1

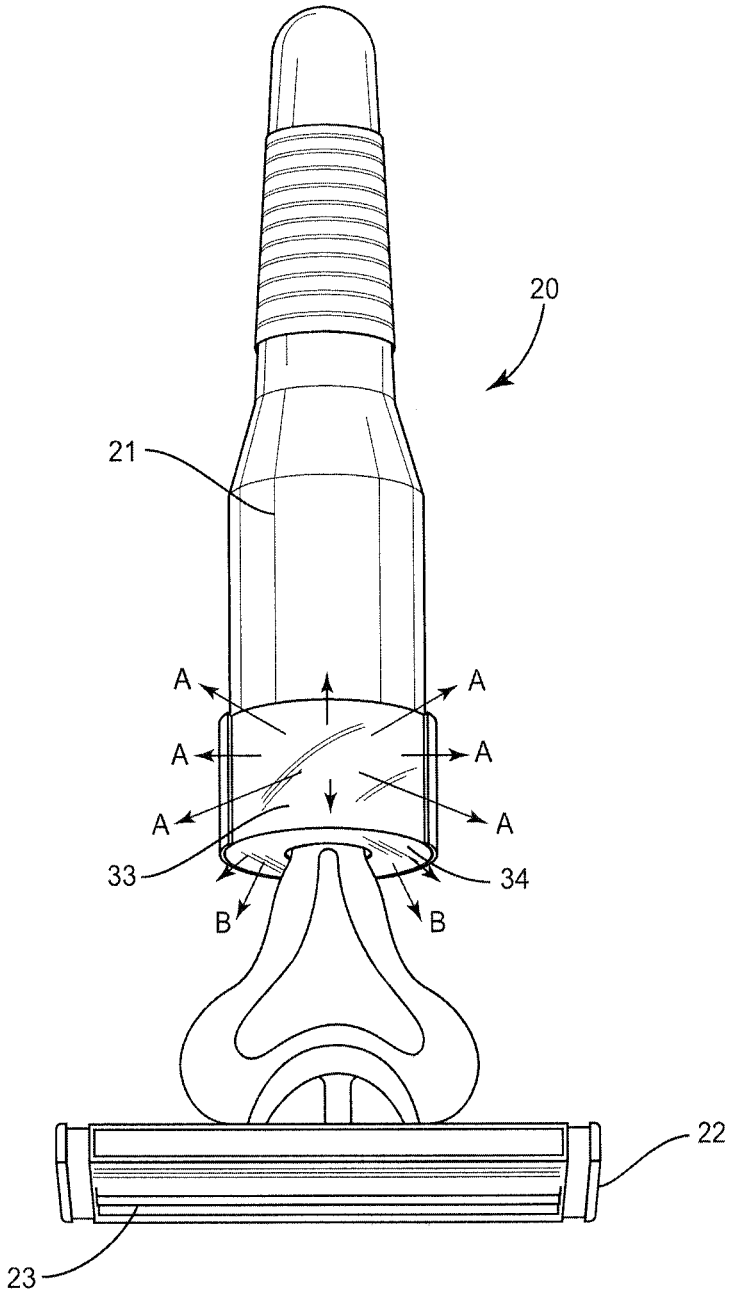

FIG. 2

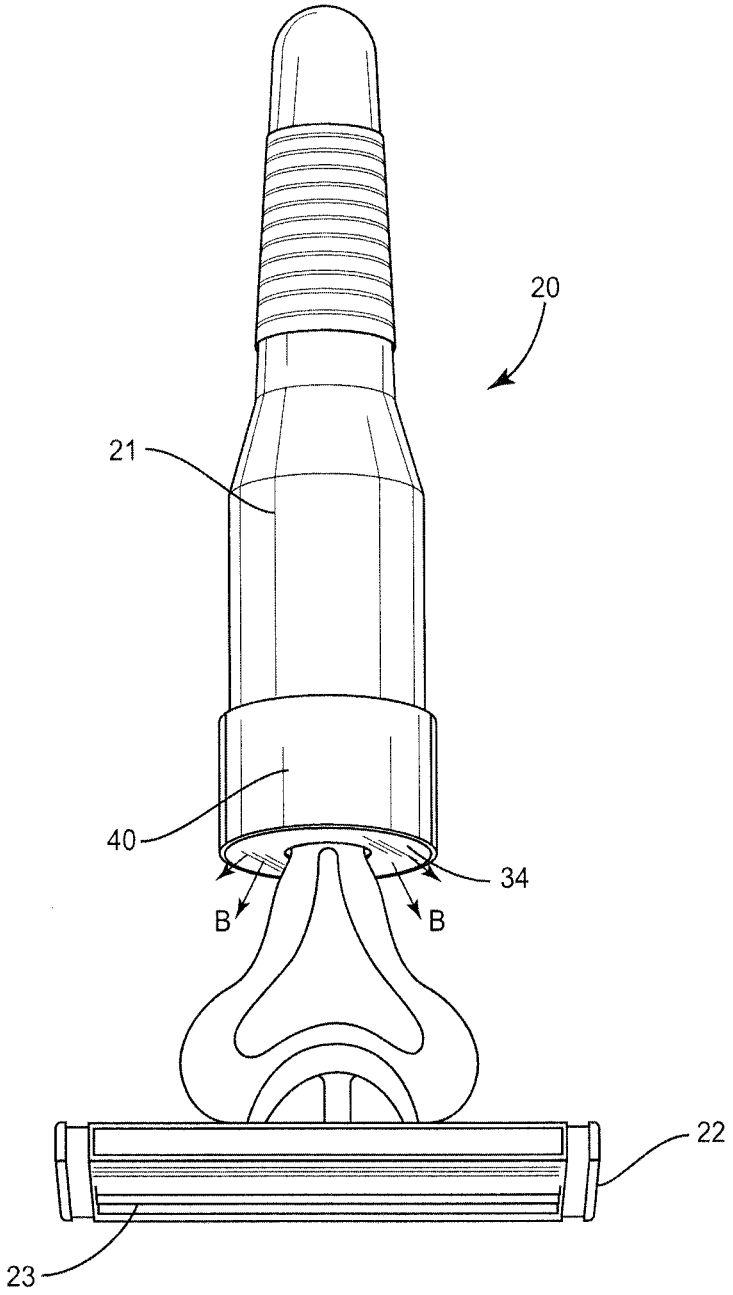

FIG. 3

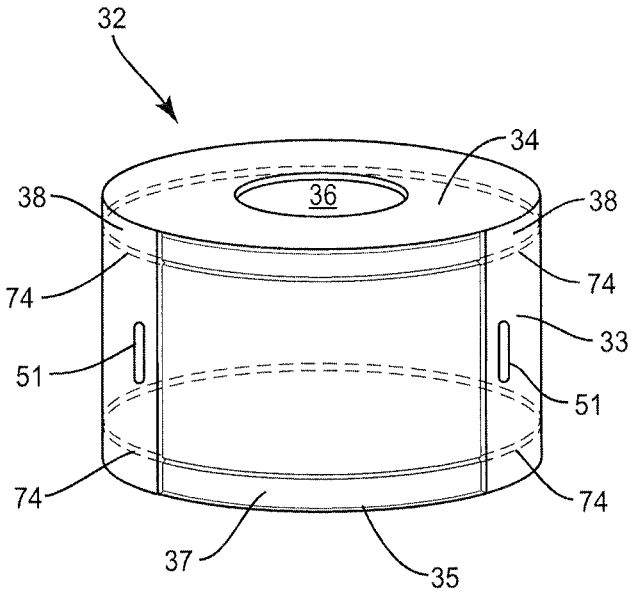

FIG. 4

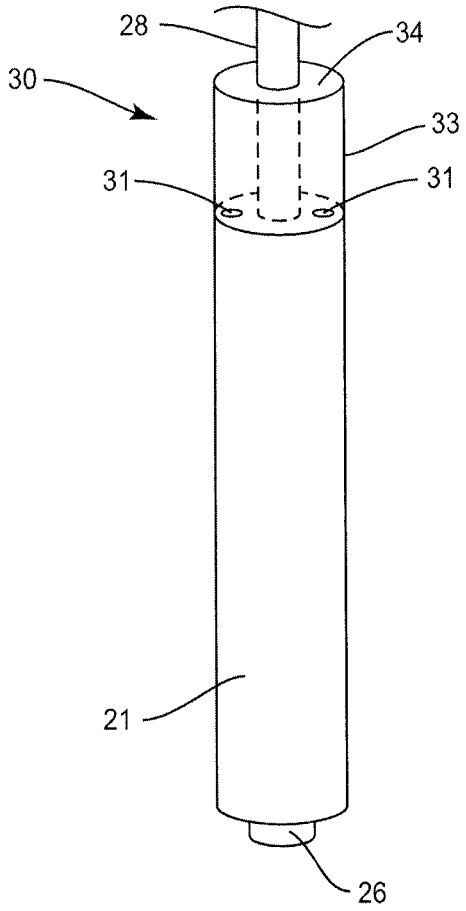

FIG. 5

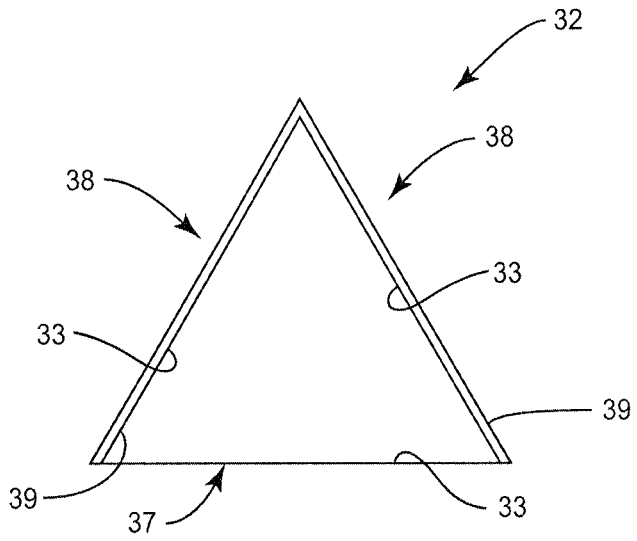

FIG. 6

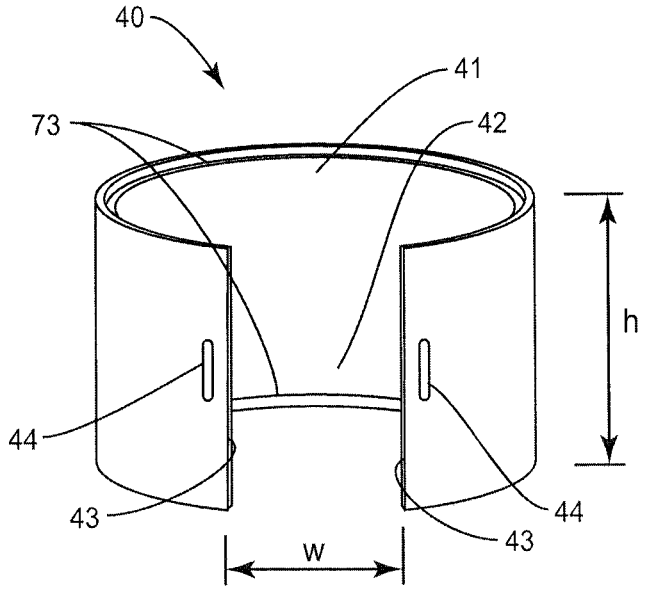

FIG. 7

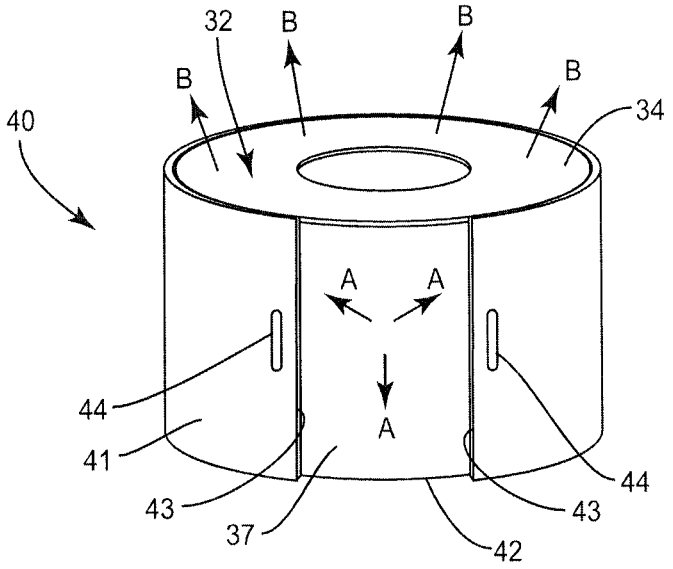

FIG. 8

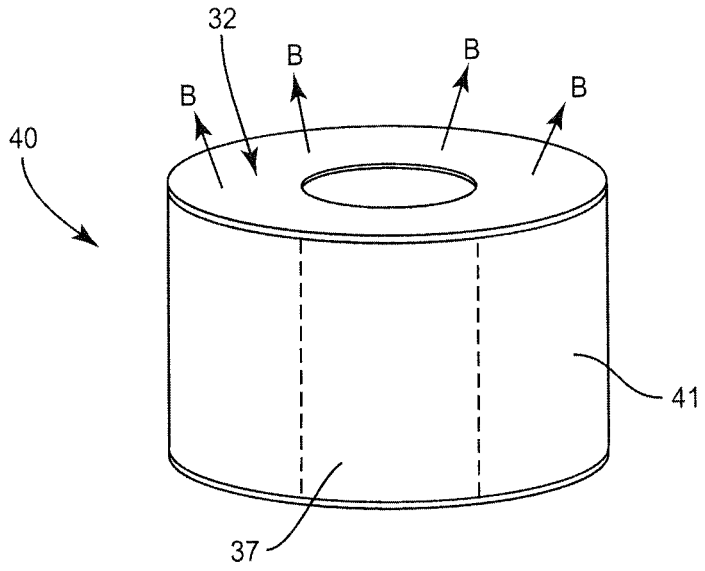

FIG. 9

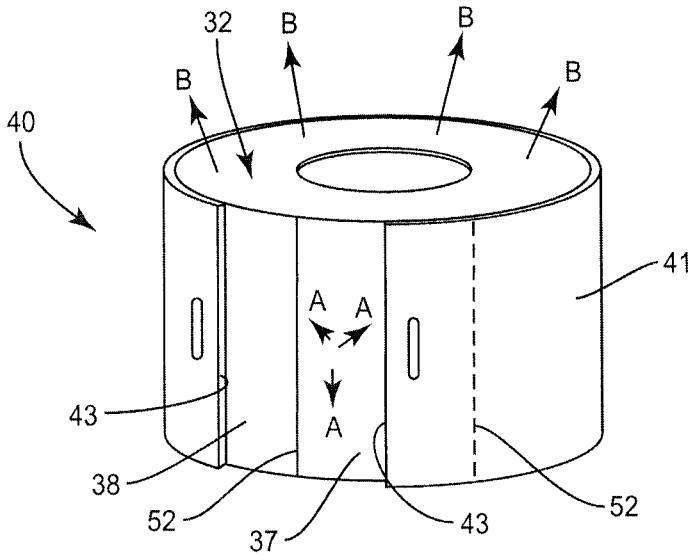

FIG. 10

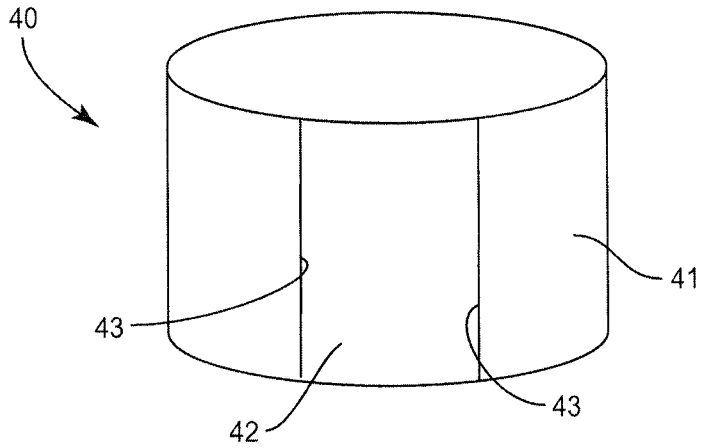

FIG. 11

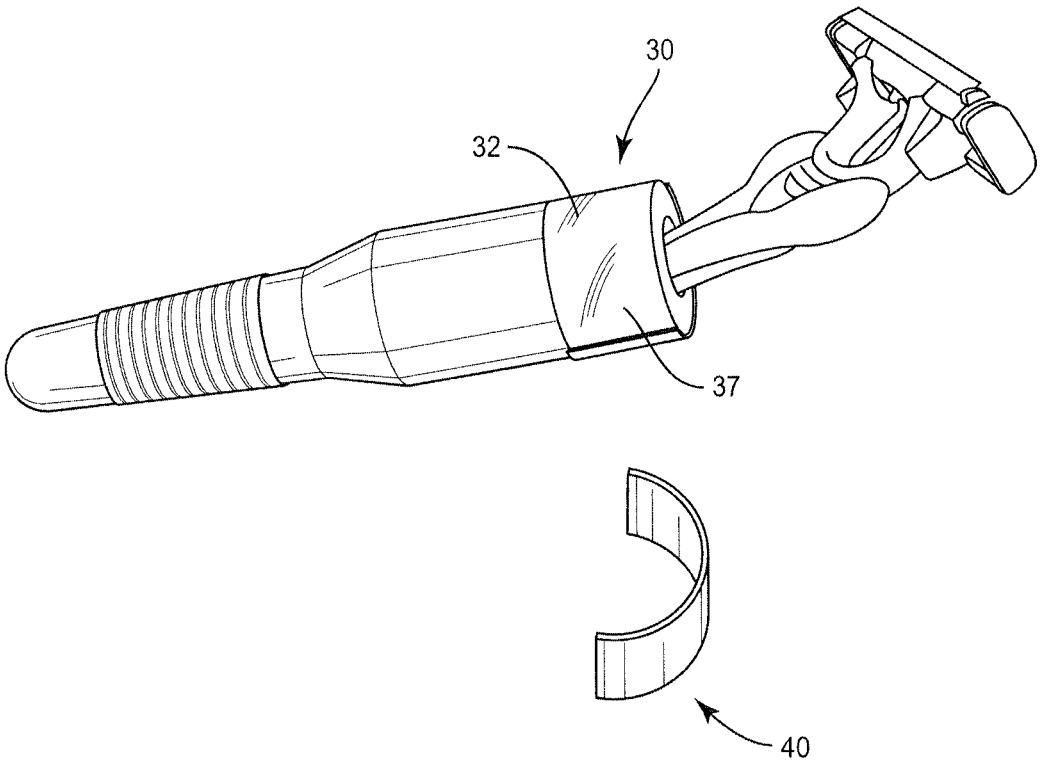

FIG. 12

LIGHTED RAZOR

FIELD OF THE INVENTION

The present application is directed to a razor and, more particularly, to a razor with a light that directs light to the cutting blade and/or the area of the person being shaved.

BACKGROUND

Razors are used in many instances in which the amount of available light is minimal or non-existent. Examples include but are not limited to shaving in a bathroom early in the morning when it is still dark, and shaving in an outdoor environment such as during a camping trip. During these instances, better and/or more light on the shaving surface or the razor's blade would facilitate the shaving process.

However, simply providing a user with an additional light is not practical. It would be difficult for a person shaving to hold a razor with one hand and a light in a second hand. This may be dangerous or not effective as often two hands are needed during the shaving process to hold the razor and to also hold or position the skin of the area being shaved.

Additional light may also be problematic in waking another person that is sleeping in an adjacent area. The light may provide benefit to the shaving person, but also cause the adjacent sleeper to be awakened which is often problematic. This may occur in a hotel room or bedroom in which the bathroom is adjacent to a bed with no intermediate divider that would block the light.

Further, additional light may actually make shaving more difficult for a person. The additional light may shine into the user's eyes making it difficult for the user to observer the razor blade and/or shaving area.

Therefore, there is a need for a lighted razor to provide light to facilitate the shaving process without providing an over-abundance of light that may be problematic.

SUMMARY

The present application is directed to a razor with a light for use in darkened environments. The amount of light being emitted may be adjusted to suit the needs of the user.

One embodiment of a razor includes a body with a handle and a blade, with the handle having an elongated shape with a longitudinal axis. At least one light element that emits light is associated with the handle. The light element is configured to emit the light in an axial direction along the longitudinal axis and a lateral direction perpendicular to the longitudinal axis. A housing extends over the one or more light elements and includes a lateral wall with a light emitting portion that extends along a first portion of the lateral wall with a remainder of the lateral wall being opaque. A sleeve with an opaque portion is operatively connected to the housing. The sleeve is positionable between a first orientation with the opaque portion positioned across the light emitting portion of the lateral wall to prevent the light from being emitted in the lateral direction, and a second orientation with the opaque portion away from the light emitting portion for the light to be emitted laterally.

The one or more light elements and the housing may be positioned axially along the longitudinal axis between the handle and the blade with the light emitted in the axial direction shining on the blade. A neck may extend between and connect the handle and the blade with the housing further including an opening through which the neck extends. The housing may include a translucent axial wall. The lateral wall of the housing may be continuous and the light emitting portion may include a translucent material. The light emitting portion may have a length that is less than or equal to one half of a total length of the housing. The housing and the sleeve may each have a circular cross-sectional shape for the sleeve to rotate around the housing. The sleeve may include an opening formed between opposing ends with the opening positioned away from the light emitting portion of the lateral wall in the first orientation and at the light emitting portion in the second orientation.

Another embodiment includes a razor having a body with a handle and a blade. The blade faces in a first lateral direction. A housing is positioned at and end of the handle. The housing includes a lateral wall with a light emitting portion that faces in the first lateral direction and an opaque portion that faces in an opposing second lateral direction. At least one light element is positioned in the housing and configured to emit light in the first lateral direction. A sleeve is positioned at the housing and includes an opaque portion. The sleeve is movable relative to the housing between a first orientation with the opaque portion positioned across the light emitting portion of the lateral wall to prevent the light from being emitted beyond the sleeve in the first lateral direction, and a second orientation with the opaque portion away from the light emitting portion of the lateral wall for the light to be emitted in the first lateral direction.

The housing may also include a translucent wall positioned at an axial end of the housing. The translucent wall and the lateral wall may include a one-piece unitary construction with the translucent wall and the light emitting portion each being constructed from a translucent material. The opaque portion of the lateral wall may extend at least one-half of a length of the lateral wall. Each of the housing and the sleeve may include a substantially circular cross-sectional shape for the sleeve to rotate around the housing. The sleeve may include a C-shaped body with a gap positioned between opposing ends. The housing may provide for light to be emitting beyond the housing in an axial direction when the sleeve is in both the first and second orientations.

Another embodiment of the razor includes a body with an elongated handle and a blade positioned at an end of the handle with the blade facing in a first lateral direction. A housing is positioned between the end of the handle and the blade. The housing includes a lateral wall and a translucent axial wall that form an interior space that is positioned at the end of the handle. The lateral wall includes a translucent portion that faces in the first lateral direction and an opaque portion that faces in an opposing second lateral direction. At least one light element is positioned in the interior space and is configured to produce light that is emitted through the translucent axial wall and the translucent portion of the lateral wall. A sleeve is positioned over the lateral wall of the housing and includes an opaque portion and a light emitting portion. The sleeve is movable relative to the housing between a first orientation with the opaque portion positioned across the translucent portion of the lateral wall to prevent the light from being emitted beyond the sleeve in the first lateral direction, and a second orientation with the light emitting portion of the sleeve positioned at the translucent portion of the lateral wall for the light to be emitted beyond the sleeve in the first lateral direction.

The light emitting portion of the sleeve may include a gap formed between opposing ends of the opaque portion. The sleeve may be configured to allow the light to be emitted through the translucent axial wall of the housing in both the first and second orientations. A part of the opaque portion of the sleeve may be positioned across the translucent portion of

the lateral wall in the second orientation. The translucent portion may comprise less than or equal to one-half of the total length of the lateral wall. The body may further include a neck that extends between and connects the handle and the head, the neck extends through the translucent axial wall of the housing.

The various aspects of the various embodiments may be used alone or in any combination, as is desired.

BRIEF DESCRIPTION OF THE DRAWINGS

FIG. **1** is a schematic diagram of a lighted razor.

FIG. **2** is a perspective view of a lighted razor in an open orientation.

FIG. **3** is a perspective view of a lighted razor in a closed orientation.

FIG. **4** is a perspective view of housing.

FIG. **5** is a perspective view of a housing mounted at an axial end of a handle with a neck extending through the housing.

FIG. **6** is a schematic sectional view of housing with translucent and opaque sections.

FIG. **7** is a perspective view of a sleeve.

FIG. **8** is a perspective view of a sleeve in an open orientation relative to a housing.

FIG. **9** is a perspective view of a sleeve in a closed orientation relative to a housing.

FIG. **10** is a perspective view of a sleeve in an open orientation relative to a housing.

FIG. **11** is a perspective view of a sleeve.

FIG. **12** is a perspective view of a razor in an open position with a sleeve removed from a housing.

DETAILED DESCRIPTION

The present application is directed to a lighted razor that directs light in one or more different directions. The directed light enables a user to shave when in dark environments, and to adjust the amount of light that emanates from the razor. The lighted razor generally includes a body with a blade for shaving. A light is attached to the body, and may be powered and controlled by mechanisms in the body. A sleeve is adjustably positioned over the light to adjust an amount of light emanating from the razor.

FIG. **1** schematically illustrates a lighted razor **10**. The razor **10** includes a body **20**, a light **30**, and a sleeve **40**. The body **20** includes a handle **21** that is grasped by the user during the shaving process. The body **20** also includes a head **22** with a blade **23** for shaving the user. The light **30** is attached to the body **20** and includes at least one light element **31** that emits light and a housing **32** that extends around at least a portion of the element **31**. The sleeve **40** is adjustably positioned over the light **30** to adjust an amount of emitted light.

The razor **10** is adjustable between an open orientation that laterally emits light in the direction indicated by arrows A as illustrated in FIG. **2**, and a closed orientation that does not laterally emit light as illustrated in FIG. **3**. The laterally-emitted light shines in the direction of the head **22** such that light is directed towards the portion of the user's body that is being shaved. The razor **10** is further configured to emit light in an axial direction in both the open and closed orientations as illustrated by arrows B in FIGS. **2** and **3**.

The body **20** includes the handle **21** and head **22**. The handle **21** is sized to be grasped by the user during the shaving process. The handle **21** may include various shapes and sizes to facilitate this use. In one embodiment, the handle **21** is substantially cylindrical with a round cross-sectional shape. The handle **21** may also include an exterior surface to facilitate gripping by the user. The exterior surface may include a rubber coating, a knurled surface, or a series of ribs that extend along the length.

The handle **21** forms an outer shell with an enclosed interior for holding a battery **24**. The handle **21** may further include one or more removable sections **25** that provide access to the interior, such as for removing and/or replacing the battery **24**.

The body **20** also includes a head **22** with one or more blades **23**. The head **22** is positioned at an axial end of the body **20** and on an opposite side of the light **30** from the handle **21**. This positioning provides for light emitted in the axial direction to illuminate the head **22**.

A neck **28** may extend between and connect the head **22** and the handle **21**. The neck **28** may include various lengths to position the head **22** at various locations outward from the light **30**. The neck **28** may be substantially straight such that the head **22** is axially aligned with the handle **21**. The neck **28** may also include a curved or angular shape such that the head **22** is laterally offset to some extent from the handle **21**. As illustrated in FIGS. **1**, **2**, and **3**, the neck **28** may extend through the light **30**.

One or more batteries **24** may be used for powering the light **30**. The razor **10** may include a single battery **24**, or may include multiple batteries **24**. In the multiple battery **24** embodiments, the batteries **24** may be the same or may be different. Various types and sizes of batteries **24** may be used with the razor **10** to power the light **30**. The batteries **24** may include alkaline batteries, and rechargeable battery packs with a variety of chemistries, such as but not limited to lithium-ion, lithium ion polymer, nickel metal hydride, and nickel cadmium. The rechargeable battery packs may be recharged while positioned in the handle **21**, or may require removal prior to being recharged.

A switch **26** is positioned on the handle **21** for selectively powering the light **30**. The switch **26** may include a depressible tab that is movable between a depressed "on" orientation, and an outward "off" orientation. The switch **26** may be positioned at various locations about the handle **21**. FIG. **1** includes the switch **26** positioned at an axial end of the handle **21** opposite from the head **22**. Electrical connections **27** extend between the battery **24** and the switch **26** and the battery **24** and the light **30**.

The light **30** is positioned and configured to provide light during the shaving process. The light **30** includes one or more light elements **31** that are powered by the battery **24**. The one or more light element **31** may be mounted on the axial end of the handle **21** and/or along the neck **28**. FIG. **1** includes the elements **31** mounted to the axial end of the handle **21**.

Various types of light elements **31** may be used for providing the light for the shaving process. Examples include but are not limited to incandescent bulbs, halogen bulbs, xenon bulbs, high intensity discharge lamps, and light emitting diodes (LED). In multiple-element embodiments, the elements may be the same or different types. Further, the different elements may be the same or different sizes.

The light **30** also includes a housing **32** as illustrated in FIG. **4** that extends around the one or more elements **31**. The housing **32** includes lateral wall **33** and an axial wall **33**. An opposing axial end **35** is open and is configured to mount to the handle **21**. The housing **32** may include various shapes and sizes, including a shape that substantially matches that of the handle **21**. FIG. **4** includes a cylindrical shape with a diameter that substantially matches that of the handle **21**. Other embodiments may include the housing **32** having larger

or smaller widths, and the same or different cross-sectional shapes than the handle **21**. An opening **36** in the axial wall **34** accommodates the neck **28**.

FIG. **5** illustrates a housing **32** attached to an axial end of the handle **21**. The housing **32** extends over the elements **31** that are mounted on the axial end of the handle **21**. The size and shape of the housing **32** substantially matches that of the handle **21**.

The lateral wall **33** includes a translucent section **37** and an opaque section **38**. The translucent section **37** provides for the passage of light from the one or more elements **31** laterally outward beyond the housing **32**. The translucent section **37** may be completely transparent, or may provide from some scattering of the light. The opaque section **38** prevents the passage of light from the one or more elements **31**.

The relative sizes of the translucent section **37** relative to the opaque section **38** may vary. The translucent section **37** may extend around various amounts of the lateral wall **33** within a range of between about 30°-180°. The opaque section **38** extends around the remaining portion of the lateral wall **33**. FIG. **4** includes an embodiment with the translucent section **37** extending around about one-quarter of a total length of the lateral wall **33** with the opaque section **37** extending the remaining three-quarters of the length (i.e., the translucent section **37** extends through an arc of about 90° with the opaque section **38** extending through the remaining 270°). In one embodiment, the translucent section **37** extends around less than or equal to one-half of the total length of the lateral wall **33**. FIG. **6** illustrates a housing **32** with a triangular cross-sectional shape. The translucent section **37** extends across one of the faces (i.e., along one-third of the length of the lateral wall **33**) with the opaque section **38** at the remaining two faces.

The opaque section **38** may be constructed in a variety of different manners. The material itself that forms the housing **32** at the opaque section may be constructed to block the light. Another embodiment includes an opaque screen **39** positioned in proximity to the housing **32** to form the opaque section **38**. The screen **39** may be positioned on the inner or outer sides of the opaque section **38**. FIG. **6** illustrates an opaque section **38** formed by first and second screens **39** that extends across the sides of the lateral wall **33**. The screen **39** may be spaced away from or in contact with the housing **32**. In one embodiment, the screen is a coating applied to the inner and/or outer sides of the housing **32** at the opaque section **38**. The various manners of providing the opaque section **38** may be used alone (e.g., just a screen) or in combination (e.g., a screen in combination with an opaque housing **32**).

The axial wall **34** of the housing **32** is translucent to allow light to be emitted in the axial direction towards the head **22**. The axial end **33** may include the same or different material as the lateral wall **33**. In one embodiment, the housing **32** is constructed as a single integral piece with a one-piece construction. Other embodiments include the axial end **33** being a separate piece from the lateral wall **33**. The lateral wall **33** itself may be constructed from one or more separate portions. The various portions and/or the axial wall **34** may be connected together by various means, such as adhesive, mechanical fasteners, and ultrasonic welding.

The light **30** may further include one or more reflective surfaces. The reflective surfaces may be positioned along the opaque section **38** and along the axial end of the handle **21**.

As illustrated in FIG. **4**, the housing **32** may also include one or more positioners **51** to engage with the sleeve **40**. The positioners **51** may extend outward from or be recessed within the lateral wall **33**.

The sleeve **40** extends around the lateral wall **32** and is opaque to block the light when positioned across the translucent section **37**. The sleeve **40** is movable relative to the housing **32** to be selectively positioned between the open orientation away from at least a portion of the translucent section **37** to allow light to be emitted in lateral directions, and a closed orientation across the translucent section **37** to block the light as illustrated in FIG. **3**.

The sleeve **40** may remain attached to the razor **10** when moving between the open and closed orientations. FIG. **7** illustrates a sleeve **40** that remains attached to the razor **10**. The sleeve **40** includes a body **41** with a curved shape and opposing ends **43**. The ends **43** are spaced apart to form a light-emitting section **42**. The body **41** is opaque to block the light from being emitted laterally from the housing when the body **41** is positioned over the translucent section **37** of the housing **30**. As with the housing **30**, the body **41** may be constructed from an opaque material, or may include a layer of opaque material.

The body **41** includes a cross-sectional shape that substantially matches that of the housing **32**. This provides for the sleeve **40** to be moved around the housing **32**. FIG. **6** includes the sleeve **40** having a substantially circular cross-sectional shape that matches that of the housing **32**.

The width w of the light-emitting section **42** may vary. In one embodiment, the width w is substantially the same as that of the translucent section **37**. This provides for the opening **42** to be precisely aligned with the translucent section **37**. Other embodiments may include the width w being larger or smaller than the translucent section **37**. The axial height h may also substantially match that of the housing **32**. This prevents any unintentional light from being laterally emitted when the sleeve **40** is in the closed orientation. Other embodiments include the height h being larger than that of the housing **32**.

The sleeve **40** also includes one or more positioners **44** that engage with the corresponding positioners **51** of the housing **30**. The positioners **44** may extend outward from or be recessed within the body **41**. The positioners **44**, **51** engage when the sleeve **40** is in the open orientation to provide a tactile and/or audible input to the user to indicate this position.

FIG. **8** illustrates the sleeve **40** in the open orientation relative to the housing **32**. For purposes of clarification, the body **20** and one or more light elements **31** are not included. The sleeve **40** is positioned with the light emitting section **42** of the sleeve **40** aligned with the translucent section **37** of the housing **32**. In this embodiment, the ends **43** of the sleeve **40** are substantially aligned with the ends of the translucent section **37**. Other embodiments may include the ends **43** positioned over and extending into the translucent section **37**, and spaced away from the ends and away from the translucent section **37**. This orientation provides for light to be emitted laterally as illustrated by arrows A. Further, the positioners **44** are engaged with the positioners **51** (not illustrated). As further illustrated, light is also emitted through the axial wall **34**.

To move the sleeve **40** to the closed orientation, the user applies a force to the body **41** to rotate the sleeve **40** relative to the housing **32**. FIG. **9** illustrates the sleeve **40** in a closed orientation. The opaque body **41** extends across the translucent section **37** of the housing **32**. This prevents light from being laterally emitted from the housing **32**. The light emitting section **42** of the sleeve **40** is positioned away from the translucent section **37** and aligned with the opaque section **38**. FIG. **9** includes the light emitting section **42** being positioned on an opposing side of the housing **32** from the translucent section **37** (and thus not visible in FIG. **9**). The closed orien-

tation may also include other relative positions in which the light emitting section **42** is positioned away from the translucent section **37**.

FIG. **8** includes the sleeve **40** positioned in an open orientation with the body **41** of the sleeve **40** away from the translucent section **37**. The sleeve **40** may also be positioned at various other relative positions in which portions of the light emitting section **42** are aligned with the translucent section **37**. FIG. **10** includes the sleeve **40** in the open orientation and partially covering the translucent section **37**. The translucent section **37** is formed between ends **52**. The sleeve **40** is positioned such that a portion of the opaque body **41** is extending over the translucent section **37**. Light is laterally emitted through the exposed portion of the translucent section **37**. This adjustability provides for the user to position the sleeve **40** relative to the housing **32** to adjust an amount of light that is laterally emitted. As is apparent, the amount of light laterally emitted from the housing **32** is dependent upon the amount of exposed translucent section **37**.

FIG. **11** includes a sleeve **40** with a single, one-piece continuous body **41**. The body **41** includes a translucent light emitting section **42** formed between ends **43**, and an opaque remainder. The sleeve **40** is movable relative to the housing **32** to adjust the position of the light emitting section **42** to adjust an amount of lateral light emitted from the housing **32**. In one embodiment, the body **41** is constructed from a translucent material with the portion away from the light emitting section **42** being covered by an opaque material.

The sleeve **40** may also be removably attached to the housing **32**. FIG. **12** includes the sleeve **40** that is sized to extend across the translucent section **37** in the closed orientation. The open orientation includes the sleeve **40** being removed from the housing **32** such that the entirety of the translucent section **37** is exposed.

The sleeve may be attached to the razor **10** in a variety of manners. In one embodiment, the body **41** of the sleeve **40** is constructed of a flexible material. The body **41** can be flexed to extend over the housing **32** and released to apply a compressive force to maintain the connection. The sleeve **40** and housing **30** and/or handle **21** may include corresponding tabs and detents. The tabs and detents connect together when the sleeve **40** is attached to the razor **10**.

In another embodiment as illustrated in FIGS. **4** and **7**, the inner side of the edge of the sleeve **40** includes one or more outwardly-extending rails **73** and the outer side of the lateral wall **33** of the housing **32** includes one or more grooves **74**. The rails **73** are sized to fit into the grooves **74** to maintain the sleeve **40** attached to the housing **32**. The rails **73** and grooves **74** are also configured to allow the sleeve **40** to slide around the housing **32** to adjust an amount of light that is emitted through the translucent section **37**. The ends of the rails **73** may further include lips that are angled relative to the remainder of the rails **73** and fit into corresponding indents in the grooves **74** to better attach the sleeve **40**. The orientation of the rails **73** and grooves **74** may also be reversed, with the lateral wall **33** of the housing **32** including rails **73** and the sleeve **40** including grooves **74**

The rails **73** and grooves **74** may be positioned at various locations along the elements. FIGS. **4** and **7** illustrate a placement inward from the axial ends of the elements. Other embodiments include the rails **73** and grooves **74** positioned at one or both axial ends. In embodiments with multiple rails/grooves, the rails and grooves may have the same or different shapes and/or sizes.

The head **22** may be connected to the body **21** through a neck **28**. In another embodiment, the body **20** does not include a neck **28** with the head **22** being connected directly to the light **30**.

In some embodiments, the housing **32** includes an axial wall **34** that faces towards the head **22** and blade **23**. In other embodiments, the housing **32** does not include the axial wall **34**. The axial end is open beyond the lateral wall **33**.

Spatially relative terms such as "under", "below", "lower", "over", "upper", and the like, are used for ease of description to explain the positioning of one element relative to a second element. These terms are intended to encompass different orientations of the device in addition to different orientations than those depicted in the figures. Further, terms such as "first", "second", and the like, are also used to describe various elements, regions, sections, etc. and are also not intended to be limiting. Like terms refer to like elements throughout the description.

As used herein, the terms "having", "containing", "including", "comprising" and the like are open ended terms that indicate the presence of stated elements or features, but do not preclude additional elements or features. The articles "a", "an" and "the" are intended to include the plural as well as the singular, unless the context clearly indicates otherwise.

The present invention may be carried out in other specific ways than those herein set forth without departing from the scope and essential characteristics of the invention. The present embodiments are, therefore, to be considered in all respects as illustrative and not restrictive, and all changes coming within the meaning and equivalency range of the appended claims are intended to be embraced therein.

What is claimed is:

1. A razor comprising:

a body with a handle and a blade, the handle including an elongated shape with a longitudinal axis;

at least one light element associated with the handle that emits light, the at least one light element being configured to emit the light in an axial direction along the longitudinal axis and a lateral direction perpendicular to the longitudinal axis;

a housing positioned at the end of the body that extends over and encloses the at least one light element and includes a lateral wall with a light emitting portion that extends along a first portion of the lateral wall with a remainder of the lateral wall being opaque, the housing also including a light emitting axial end wall that extends across the longitudinal axis; and

a sleeve comprising an opaque body with a pair of spaced-apart end walls that are separated by a gap, the sleeve being operatively connected to the housing, the sleeve being positionable between a first orientation with the opaque body positioned across the light emitting portion of the lateral wall to prevent the light from being emitted in the lateral direction with just the light through the axial end wall being emitted from the handle, and a second orientation with the gap positioned at the light emitting portion for the light to be emitted from the handle through both the light emitting portion of the lateral wall and the light emitting axial end wall;

the sleeve being positioned away from the light emitting axial end wall of the housing with the light being emitted from the handle and onto the blade in each of the first and second orientations.

2. The razor of claim **1**, wherein the at least one light element and the housing are positioned axially along the longitudinal axis between the handle and the blade with the light emitted in the axial direction shining on the blade.

3. The razor of claim 2, further comprising a neck that extends between and connects the handle and the blade with the housing further including an opening through which the neck extends.

4. The razor of claim 2, wherein the axial end wall of the housing is translucent.

5. The razor of claim 1, wherein the lateral wall of the housing is continuous and the light emitting portion includes a translucent material, the light emitting portion having a length that is less than or equal to one half of a total length of the housing.

6. The razor of claim 1, wherein the housing and the sleeve each have a circular cross-sectional shape for the sleeve to rotate around the housing.

7. A razor comprising:

a body with a handle and a blade, the blade facing in a first lateral direction;

a housing positioned at an end of the handle, the housing including a lateral wall with a first light emitting portion that faces in the first lateral direction and an opaque portion that faces in an opposing second lateral direction, the housing also including an axial end wall with a second light emitting portion that faces in an axial direction towards the blade and transverse to the first and second lateral directions;

at least one light element positioned in the housing and configured to emit light in the first lateral direction and in the axial direction perpendicular to the first lateral direction; and

a sleeve comprising an opaque body with a pair of spaced-apart end walls that are separated by a gap, the sleeve positioned at the housing and being movable relative to the housing between a first orientation with the opaque body positioned across the first light emitting portion of the lateral wall to prevent the light from being emitted beyond the sleeve in the first lateral direction and to be emitted in just the axial direction onto the blade, and a second orientation with the opaque body positioned away from the first light emitting portion of the lateral wall and the gap positioned at the first light emitting portion of the lateral wall for the light to be emitted in the first lateral direction and the axial direction;

the sleeve positionable between the first and second orientations to control the amount of light emitted in the first lateral direction without affecting the amount of light emitted in the axial direction onto the blade.

8. The razor of claim 7, wherein the axial end wall of the housing is translucent.

9. The razor of claim 7, wherein the axial end wall and the lateral wall include a one-piece unitary construction with the axial end wall and the first light emitting portion each being constructed from a translucent material.

10. The razor of claim 7, wherein the opaque portion of the lateral wall extends at least one-half of a length of the lateral wall.

11. The razor of claim 7, wherein each of the housing and the sleeve include a substantially circular cross-sectional shape for the sleeve to rotate around the housing.

12. The razor of claim 7, wherein the opaque body of the sleeve is a C-shaped with the gap positioned between opposing end walls.

* * * * *