US009475661B2

(12) **United States Patent**
Oren

(10) **Patent No.: US 9,475,661 B2**
(45) **Date of Patent: *Oct. 25, 2016**

(54) **METHODS OF STORING AND MOVING PROPPANT AT LOCATION ADJACENT RAIL LINE**

(71) Applicant: **Oren Technologies, LLC**, Houston, TX (US)

(72) Inventor: **John Oren**, Houston, TX (US)

(73) Assignee: **Oren Technologies, LLC**, Houston, TX (US)

(*) Notice: Subject to any disclaimer, the term of this patent is extended or adjusted under 35 U.S.C. 154(b) by 0 days.

This patent is subject to a terminal disclaimer.

(21) Appl. No.: **15/143,893**

(22) Filed: **May 2, 2016**

(65) **Prior Publication Data**

US 2016/0244278 A1 Aug. 25, 2016

Related U.S. Application Data

(63) Continuation of application No. 14/851,005, filed on Sep. 11, 2015, now Pat. No. 9,358,916, which is a continuation of application No. 14/314,468, filed on Jun. 25, 2014, now Pat. No. 9,162,603, which is a

(Continued)

(51) **Int. Cl.**
B60P 1/64 (2006.01)
B65G 65/34 (2006.01)
(Continued)

(52) **U.S. Cl.**
CPC ***B65G 65/34*** (2013.01); ***B65D 88/022*** (2013.01); ***B65D 88/12*** (2013.01); ***B65D 88/54*** (2013.01);

(Continued)

(58) **Field of Classification Search**
CPC B60P 1/6418; B60P 3/00; B65G 57/09; B65G 57/20; B65G 65/30; B65G 65/23; B65G 65/32; B65G 65/42; B65G 67/04; B65G 67/24; B65D 88/54; B65D 88/56; B65D 88/70; B65D 90/008; B65D 90/34; B61B 1/005
USPC 414/802
See application file for complete search history.

(56) **References Cited**

U.S. PATENT DOCUMENTS

137,871 A 4/1873 Worsley
150,894 A 5/1874 Safely
(Continued)

FOREIGN PATENT DOCUMENTS

CA 2023138 2/1992
CA 2791088 3/2013
(Continued)

OTHER PUBLICATIONS

International Search Report for related International Application No. PCT/US2012/066639, Feb. 25, 2013.
(Continued)

Primary Examiner — Michael McCullough
Assistant Examiner — Lynn Schwenning
(74) *Attorney, Agent, or Firm* — Hogan Lovells US LLP

(57) **ABSTRACT**

A method of delivering proppant to a well site has the steps of transporting a load of proppant in a vessel to a desired location, moving the load of proppant from the vessel into a container so as to create a proppant-loaded container, unloading the proppant-loaded container into a pneumatic bulk trailer, and transporting the unloaded proppant in the pneumatic bulk trailer to well site. The container is placed onto a bed of a truck and moved in proximity to the vessel. The proppant-loaded container is placed onto a tilting mechanism and then tilted so that the proppant is discharged through a flow gate of a container into a hopper. The proppant in the hopper can then be conveyed to the pneumatic bulk trailer.

20 Claims, 2 Drawing Sheets

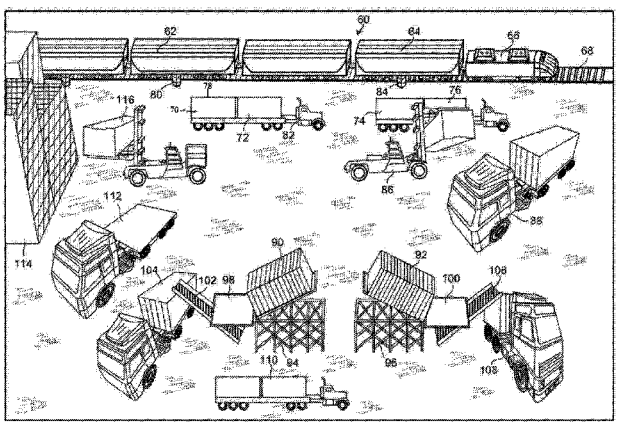

Related U.S. Application Data

continuation of application No. 14/310,648, filed on Jun. 20, 2014, now Pat. No. 9,248,772, which is a continuation of application No. PCT/US2013/032819, filed on Mar. 18, 2013, which is a continuation of application No. 13/427,140, filed on Mar. 22, 2012, now Pat. No. 8,622,251, which is a continuation-in-part of application No. 13/332,937, filed on Dec. 21, 2011, now Pat. No. 8,827,118.

(51) **Int. Cl.**

B65G 57/02	(2006.01)
B65G 65/32	(2006.01)
B65G 67/24	(2006.01)
B65G 67/02	(2006.01)
B65D 88/02	(2006.01)
B65D 88/12	(2006.01)
B65D 90/54	(2006.01)
B65D 88/54	(2006.01)

(52) **U.S. Cl.**

CPC ***B65D 90/54*** (2013.01); ***B65G 57/02*** (2013.01); ***B65G 65/32*** (2013.01); ***B65G 67/02*** (2013.01); ***B65G 67/24*** (2013.01); *B65G 2203/0216* (2013.01)

(56) **References Cited**

U.S. PATENT DOCUMENTS

384,443	A	6/1888	Hoover
448,238	A	3/1891	Johnson
711,632	A	10/1902	Johnson
917,649	A	4/1909	Otto
1,143,641	A	6/1915	McGregor
1,331,883	A	2/1920	Stuart
1,344,768	A	6/1920	Messiter
1,434,488	A	11/1922	Forsythe et al.
1,520,560	A	12/1923	Burno
1,506,936	A	9/1924	Lea
1,526,527	A	2/1925	Butler
1,573,664	A	2/1926	Wetherill
1,850,000	A	3/1932	Fernand
1,973,312	A	9/1934	Hardinge
2,233,005	A	2/1941	Garlinghouse
2,293,160	A	8/1942	Miller et al.
2,368,672	A	2/1945	McNamara
2,423,879	A	7/1947	De Frees
2,564,020	A	8/1951	Mengel
2,616,758	A	11/1952	Meyers
2,622,771	A	12/1952	Tulou
2,652,174	A	9/1953	Shea et al.
2,792,262	A	4/1955	Hathorn
2,865,521	A	12/1958	Fisher et al.
2,894,666	A	7/1959	Campbell, Jr.
3,049,248	A	8/1962	Heltzel et al.
3,064,832	A	11/1962	Heltzel
3,083,879	A	4/1963	Coleman
3,090,527	A	5/1963	Rensch
3,163,127	A	12/1964	Gutridge et al.
3,199,585	A	8/1965	Cronberger
3,248,026	A	4/1966	Kemp
3,270,921	A	9/1966	Nadolske et al.
3,281,006	A	10/1966	Wei
3,294,306	A	12/1966	Areddy
3,318,473	A	5/1967	Jones et al.
3,353,599	A	11/1967	Swift
3,354,918	A	11/1967	Coleman
3,378,152	A	4/1968	Warner
3,387,570	A	6/1968	Pulcrano et al.
3,397,654	A	8/1968	Snyder
3,407,971	A	10/1968	Oehler
3,455,474	A	7/1969	Truncali
3,528,570	A	9/1970	Pase
3,561,633	A	2/1971	Morrison et al.
3,587,834	A	6/1971	Dugge
3,601,244	A	8/1971	Ort et al.
3,602,400	A	8/1971	Cooke
3,653,521	A	4/1972	Bridge
3,661,293	A	5/1972	Gerhard et al.
3,721,199	A	3/1973	Hassenauer
3,729,121	A	4/1973	Cannon
3,738,511	A	6/1973	Lemon et al.
3,785,534	A	1/1974	Smith
3,800,712	A	4/1974	Krug, Jr.
3,817,261	A	6/1974	Rogge
3,820,762	A	6/1974	Bostrom et al.
3,861,716	A	1/1975	Baxter et al.
3,883,005	A	5/1975	Stevens
3,986,708	A	10/1976	Heltzel et al.
4,004,700	A	1/1977	Empey
4,063,656	A	12/1977	Lambert
4,138,163	A	2/1979	Calvert et al.
4,178,117	A	12/1979	Brugler
4,204,773	A	5/1980	Bates
4,210,273	A	7/1980	Hegele
4,210,963	A	7/1980	Ricciardi et al.
RE30,358	E	8/1980	Sensibar
4,222,498	A	9/1980	Brock
4,232,884	A	11/1980	DeWitt
4,239,424	A	12/1980	Pavolka
4,247,228	A	1/1981	Gray et al.
4,265,266	A	5/1981	Kierbow et al.
4,282,988	A	8/1981	Hulbert, Jr.
4,350,241	A	9/1982	Wenzel
4,359,176	A	11/1982	Johnson
4,363,396	A	12/1982	Wolf et al.
4,397,406	A	8/1983	Croley
4,398,653	A	8/1983	Daloisio
4,402,392	A	9/1983	Fabian et al.
4,407,202	A	10/1983	McCormick
4,408,886	A	10/1983	Sampson et al.
4,428,504	A	1/1984	Bassett et al.
4,449,861	A	5/1984	Saito et al.
4,474,204	A	10/1984	West
4,478,155	A	10/1984	Cena et al.
4,532,098	A	7/1985	Campbell
4,608,931	A	9/1986	Ruhmann et al.
4,626,155	A	12/1986	Hlinsky et al.
4,701,095	A	10/1987	Berryman et al.
4,715,754	A	12/1987	Scully
4,738,774	A	4/1988	Patrick
4,741,273	A	5/1988	Sherwood
4,801,389	A	1/1989	Brannon et al.
4,819,830	A	4/1989	Schultz
4,848,605	A	7/1989	Wise
4,882,784	A	11/1989	Tump
4,901,649	A	2/1990	Fehrenbach et al.
4,909,378	A	3/1990	Webb
4,909,556	A	3/1990	Koskinen
4,917,019	A	4/1990	Hesch et al.
4,919,583	A	4/1990	Speakman, Jr.
4,946,068	A	8/1990	Erickson et al.
4,947,760	A	8/1990	Dawson et al.
4,975,205	A	12/1990	Sloan
4,995,522	A	2/1991	Barr
5,004,400	A	4/1991	Handke
5,042,538	A	8/1991	Wiese
5,069,352	A	12/1991	Harbolt et al.
5,102,286	A	4/1992	Fenton
5,105,858	A	4/1992	Levinson
5,131,524	A	7/1992	Uehara
5,199,826	A	4/1993	Lawrence
5,201,546	A	4/1993	Lindsay
5,224,635	A	7/1993	Wise
5,253,776	A	10/1993	Decroix et al.
5,286,158	A	2/1994	Zimmerman
5,290,139	A	3/1994	Hedrick
5,320,046	A	6/1994	Hesch
5,339,996	A	8/1994	Dubbert
5,373,792	A	12/1994	Pileggi et al.
5,402,915	A	4/1995	Hogan
5,413,154	A	5/1995	Hurst, Jr. et al.

(56) **References Cited**

U.S. PATENT DOCUMENTS

5,429,259	A	7/1995	Robin
5,441,321	A	8/1995	Karpisek
5,445,289	A	8/1995	Owen
5,470,175	A	11/1995	Jensen et al.
5,538,286	A	7/1996	Hoff
5,564,599	A	10/1996	Barber et al.
5,602,761	A	2/1997	Spoerre et al.
5,613,446	A	3/1997	DiLuigi et al.
RE35,580	E	8/1997	Heider et al.
5,687,881	A	11/1997	Rouse et al.
5,690,466	A	11/1997	Gaddis et al.
5,706,614	A	1/1998	Wiley et al.
5,761,854	A	6/1998	Johnson et al.
5,762,222	A	6/1998	Liu
5,782,524	A	7/1998	Heider et al.
5,785,421	A	7/1998	Milek
5,806,863	A	9/1998	Heger et al.
5,836,480	A	11/1998	Epp et al.
5,876,172	A	3/1999	Di Rosa
5,911,337	A	6/1999	Bedeker
5,927,558	A	7/1999	Bruce
5,971,219	A	10/1999	Karpisek
6,002,063	A	12/1999	Bilak et al.
6,069,118	A	5/2000	Hinkel et al.
6,077,068	A	6/2000	Okumura
6,109,486	A	8/2000	Lee
6,120,233	A	9/2000	Adam
6,155,175	A	12/2000	Rude et al.
6,190,107	B1	2/2001	Lanigan et al.
6,192,985	B1	2/2001	Hinkel et al.
6,205,938	B1	3/2001	Foley et al.
6,247,594	B1	6/2001	Garton
6,283,212	B1	9/2001	Hinkel et al.
6,306,800	B1	10/2001	Samuel et al.
6,328,156	B1	12/2001	Otsman
6,328,183	B1	12/2001	Coleman
6,364,584	B1	4/2002	Taylor
6,401,983	B1	6/2002	McDonald et al.
6,415,909	B1	7/2002	Mitchell et al.
6,457,291	B2	10/2002	Wick
6,508,615	B2	1/2003	Taylor
6,537,002	B2	3/2003	Gloystein
6,575,614	B2	6/2003	Tosco et al.
6,660,693	B2	12/2003	Miller et al.
6,675,073	B2	1/2004	Kieman et al.
6,720,290	B2	4/2004	England et al.
6,772,912	B1	8/2004	Schall et al.
6,776,235	B1	8/2004	England
6,783,032	B2	8/2004	Fons
6,811,048	B2	11/2004	Lau
6,828,280	B2	12/2004	England et al.
6,835,041	B1	12/2004	Albert
6,882,960	B2	4/2005	Miller
6,902,061	B1	6/2005	Elstone
6,915,854	B2	7/2005	England et al.
6,953,119	B1	10/2005	Wening
6,955,127	B2	10/2005	Taylor
6,968,946	B2	11/2005	Shuert
7,084,095	B2	8/2006	Lee et al.
7,104,425	B2	9/2006	Le Roy
7,140,516	B2	11/2006	Bothor
7,214,028	B2	5/2007	Boasso
7,240,681	B2	7/2007	Saik
7,252,309	B2	8/2007	Eng Soon
7,284,579	B2	10/2007	Elgan et al.
7,316,333	B2	1/2008	Wegner
7,475,796	B2	1/2009	Garton
7,513,280	B2	4/2009	Brashears et al.
7,753,637	B2	7/2010	Benedict et al.
7,798,558	B2	9/2010	Messier
7,802,958	B2	9/2010	Garcia et al.
7,837,427	B2	11/2010	Beckel et al.
7,921,783	B2	4/2011	Forbes et al.
7,967,161	B2	6/2011	Townsend
8,083,083	B1	12/2011	Mohns
8,201,520	B2	6/2012	Meritt
8,313,278	B2	11/2012	Simmons et al.
D688,351	S	8/2013	Oren
8,505,780	B2	8/2013	Oren
8,562,022	B2	10/2013	Nadeau et al.
8,585,341	B1	11/2013	Oren
8,616,370	B2	12/2013	Allegretti
8,622,251	B2	1/2014	Oren
8,668,430	B2	3/2014	Oren
D703,582	S	4/2014	Oren
8,827,118	B2	9/2014	Oren
8,887,914	B2	11/2014	Allegretti
2001/0022308	A1	9/2001	Epp et al.
2001/0045338	A1	11/2001	Ransil et al.
2002/0134550	A1	9/2002	Leeson et al.
2002/0139643	A1	10/2002	Peltier et al.
2003/0111470	A1	6/2003	Fouillet et al.
2003/0156929	A1	8/2003	Russell
2004/0065699	A1	4/2004	Schoer et al.
2004/0074922	A1	4/2004	Bother et al.
2004/0084874	A1	5/2004	McDougall et al.
2004/0206646	A1	10/2004	Goh
2004/0245284	A1	12/2004	Mehus et al.
2005/0158158	A1	7/2005	Porta
2005/0201851	A1	9/2005	Jonkka
2006/0180062	A1	8/2006	Furrer et al.
2006/0180232	A1	8/2006	Glewwe et al.
2006/0239806	A1	10/2006	Yelton
2006/0267377	A1	11/2006	Lusk et al.
2006/0277783	A1	12/2006	Garton
2007/0096537	A1	5/2007	Hicks
2007/0125543	A1	6/2007	McNeel et al.
2008/0008562	A1	1/2008	Beckel et al.
2008/0029546	A1	2/2008	Shuld
2008/0029553	A1	2/2008	Culleton
2008/0179054	A1	7/2008	McGough et al.
2008/0179324	A1	7/2008	McGough et al.
2008/0213073	A1	9/2008	Benedict et al.
2008/0226434	A1	9/2008	Smith et al.
2008/0264641	A1	10/2008	Slabaugh et al.
2009/0038242	A1	2/2009	Cope
2009/0078410	A1	3/2009	Krenek et al.
2009/0278326	A1	11/2009	Rowland et al.
2010/0021258	A1	1/2010	Kim
2010/0038143	A1	2/2010	Burnett et al.
2010/0040446	A1	2/2010	Renyer
2010/0065466	A1	3/2010	Perkins
2010/0108711	A1	5/2010	Wietgrefe
2011/0011893	A1	1/2011	Cerny
2011/0017693	A1	1/2011	Thomas
2011/0101040	A1	5/2011	Weissbrod
2011/0109073	A1	5/2011	Williams
2011/0160104	A1	6/2011	Wu et al.
2011/0222983	A1	9/2011	Dugic et al.
2012/0219391	A1	8/2012	Teichrob et al.
2013/0004272	A1	1/2013	Mintz
2013/0022441	A1	1/2013	Uhryn et al.
2013/0206415	A1	8/2013	Sheesley
2013/0209204	A1	8/2013	Sheesley
2013/0233545	A1	9/2013	Mahoney
2013/0309052	A1	11/2013	Luharuka
2013/0323005	A1	12/2013	Rexius et al.
2014/0020765	A1	1/2014	Oren
2014/0020892	A1	1/2014	Oren
2014/0023465	A1	1/2014	Oren et al.
2014/0083554	A1	3/2014	Harris
2014/0097182	A1	4/2014	Sheesley
2014/0166647	A1	6/2014	Sheesley
2014/0203046	A1	7/2014	Allegretti
2014/0234059	A1	8/2014	Thomeer
2014/0305769	A1	10/2014	Eiden et al.
2014/0321950	A1	10/2014	Krenek et al.
2015/0069052	A1	3/2015	Allegretti et al.
2015/0086307	A1	3/2015	Stefan

FOREIGN PATENT DOCUMENTS

CN	201881469	6/2011
DE	3108121	9/1982

(56) **References Cited**

FOREIGN PATENT DOCUMENTS

DE	3342281	6/1985
EP	0019967	12/1980
EP	0997607	5/2000
EP	1775190	4/2007
EP	2062832	5/2009
GB	1296736	11/1972
GB	2374864	10/2002
JP	S4871029	9/1973
JP	S4876041	9/1973
JP	S58161888	10/1983
JP	410087046	4/1998
JP	10264882	10/1998
MX	2012011046	5/2013
WO	9008082	7/1990
WO	9202437	2/1992
WO	1993006031	4/1993
WO	2006039757	4/2006
WO	2007005054	1/2007
WO	2010026235	3/2010
WO	2011099358	8/2011
WO	2012021447	2/2012
WO	2012058059	5/2012

OTHER PUBLICATIONS

International Search Report for related International Application No. PCT/US2013/035442, Jun. 23, 20113.
International Search Report for related International Application No. PCT/US2013/032819, May 23, 2013.
International Search Report for related International Application No. PCT/US2013/049028, Mar. 4, 2014.
International Preliminary Report on Patentability for PCT/US2012/066639, Feb. 26, 2013.
International Preliminary Report on Patentability for PCT/US2013/032819, Sep. 23, 2014.
International Search Report for PCT/US2015/012990, dated May 6, 2015. (15 pages).
FS-35 Desert Frac-Sanders. NOV (National Oilwell Varco). Mar. 19, 2012. (https://web.archive.org/web/20120319070423/http://www.nov.com/Well_Service_and_Completion/Frac_Sand_Handling_Equipment/Frac_Sanders/FS-35.aspx).
File History for U.S. Appl. No. 61/538,616, Robert A. Harris, Sep. 23, 2011. (21 pages).
International Search Report for PCT/US2015/024810, Jul. 8, 2015. (13 pages).
European Search Report for Application No. 15167039.5, Sep. 8, 2015. (7 pages).
SandBox Logistics, "Mine to Wellhead Logistics," Houston, TX, May 2013.
SandBox Logistics, screenshots from video made in Apr. 2013 and publicly shown in May, 2013, Arnegard, North Dakota.
International Search Report for PCT/US15/35635, Oct. 30, 2015. (12 pages).
PCT International Search Report for PCT/US15/49074, Dec. 17, 2015. (11 pages).
PCT International Search Report for PCT/US15/57601, May 6, 2016. (11 pages).
Grit Energy Solutions, LLC, Fidelity, Screenshots from video dated May 16, 2014.
Grit Energy Solutions, LLC, Gate, Screenshots from video dated Dec. 6, 2013, https://www.youtube.com/user/gritstack.
Grit Energy Solutions, LLC, Screen, Screenshots from video dated Dec. 6, 2013, https://www.youtube.com/user/gritstack.
Grit Energy Solutions, LLC, The Grit Stack System—Live Frac, Screenshots from video dated Jun. 15, 2015, https://www.youtube.com/user/gritstack.
Grit Energy Solutions, LLC, The Grit Stack System, Screenshots from video dated Feb. 7, 2014, https://www.youtube.com/user/gritstack.
SandBox Logistics, LLC, screenshots from video dated Sep. 19, 2013.
SandBox Logistics, LLC, screenshots from video dated Aug. 22, 2014.
SandBox Logistics, LLC, screenshots from video dated Oct. 11, 2013.
SandBox Logistics, LLC, screenshots from video dated Apr. 10, 2013.

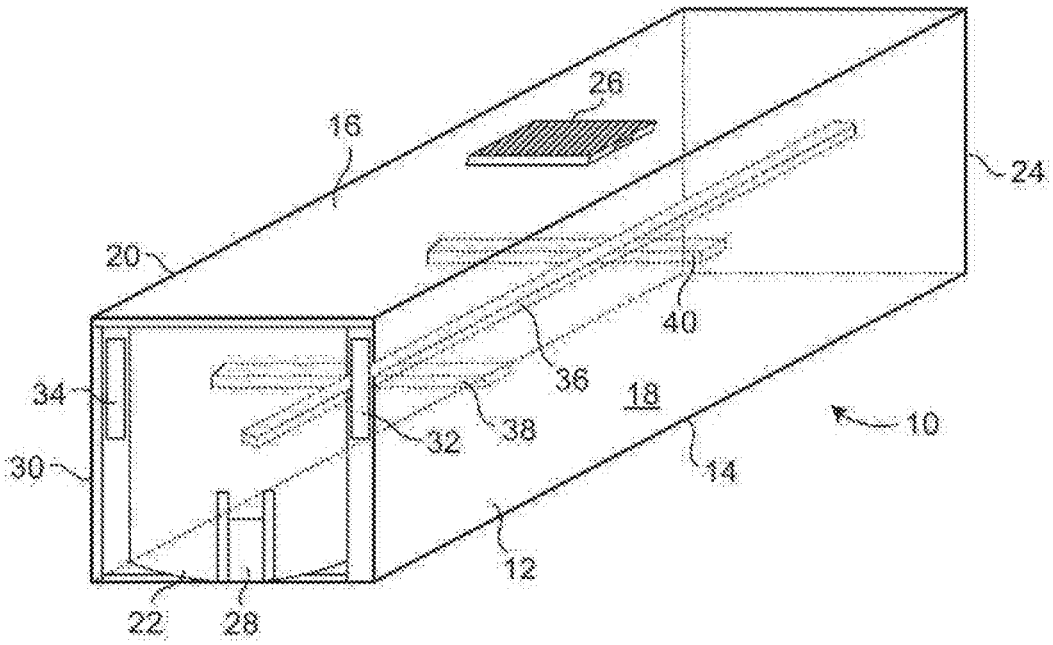
26
16
24
20
40
36
34
18
10
32
38
30
14
12
22
28

FIG. 1

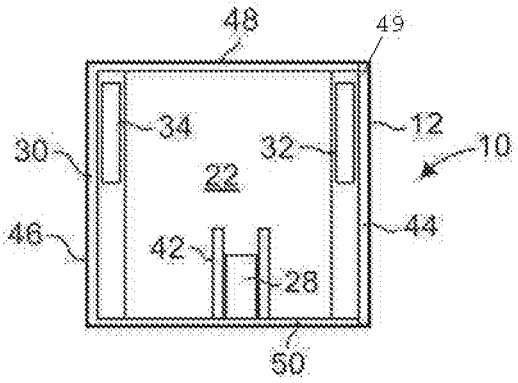
48
49
34
12
30
32
10
22
46
42
44
28
50

FIG. 2

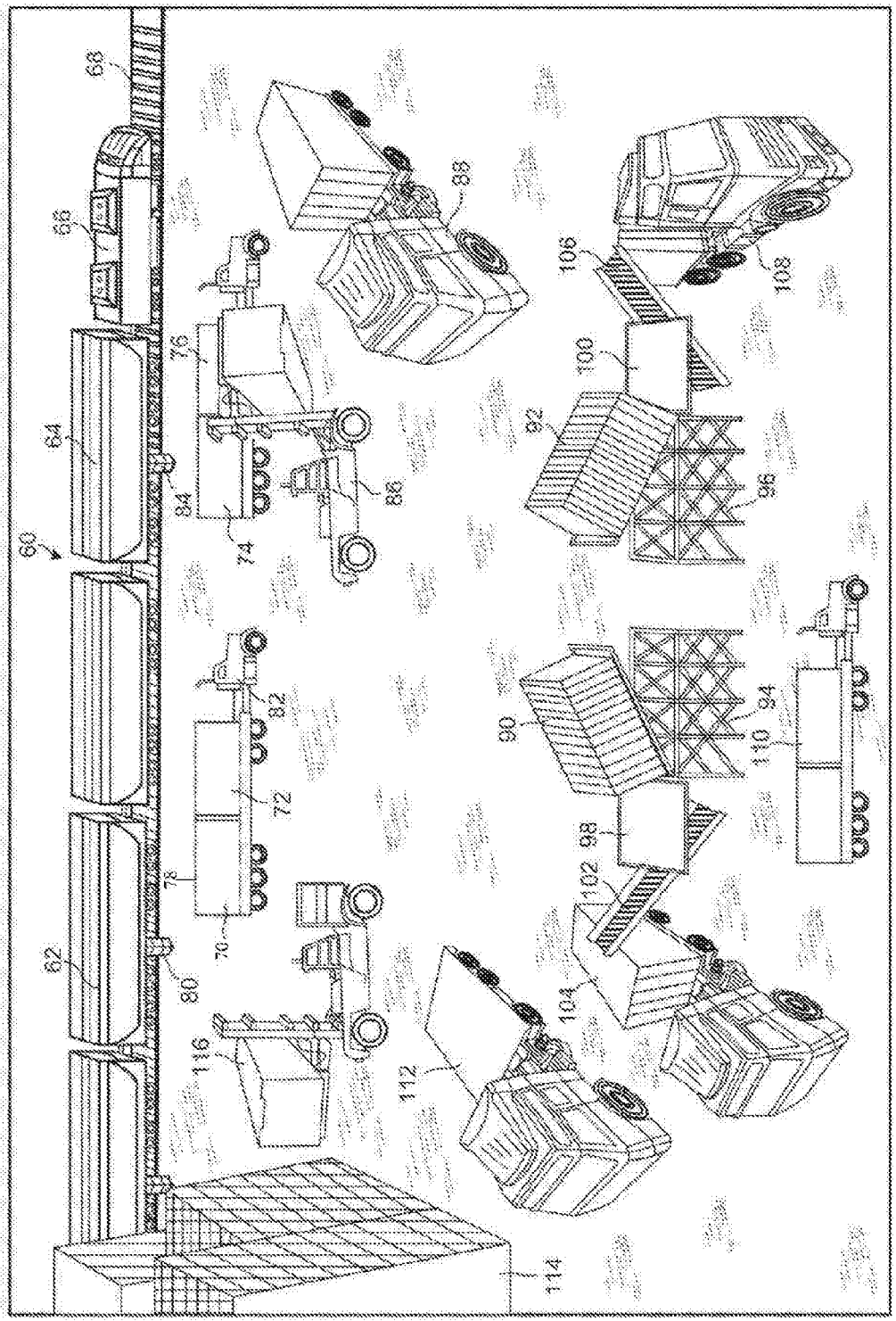
60
62
64
66
68
70
72
74
76
78
80
82
84
86
88
90
92
94
96
98
100
102
104
106
108
110
112
114
116

FIG. 3

METHODS OF STORING AND MOVING PROPPANT AT LOCATION ADJACENT RAIL LINE

RELATED APPLICATIONS

This application claims the benefit of, and is a continuation of U.S. patent application Ser. No. 14/851,005, filed Sep. 11, 2015, titled "Methods of Storing and Moving Proppant at Location Adjacent Rail Line," which is a continuation of U.S. patent application Ser. No. 14/314,468, filed Jun. 25, 2014, titled "Methods of Storing and Moving Proppant at Location Adjacent Rail Line," now U.S. Pat. No. 9,162,603, issued Oct. 20, 2015, which is a continuation of U.S. patent application Ser. No. 14/310,648, filed Jun. 20, 2014, titled "Method of Delivering, Transporting, and Storing Proppant for Delivery and Use at a Well Site," now U.S. Pat. No. 9,248,772, issued Feb. 2, 2016, which is a continuation of PCT Application No. PCT/US13/32819, filed on Mar. 18, 2013, titled "System of Delivering and Storing Proppant for Use at a Well Site and Container for Such Proppant," which claims the benefit of U.S. patent application Ser. No. 13/427,140, filed on Mar. 22, 2012, titled "System of Delivering and Storing Proppant for Use at a Well Site and Container for Such Proppant," now U.S. Pat. No. 8,622,251, issued on Jan. 7, 2014, which is a continuation-in-part of U.S. patent application Ser. No. 13/332,937 filed on Dec. 21, 2011, titled "Proppant Storage Vessel and Assembly Thereof," now U.S. Pat. No. 8,827,118, issued on Sep. 9, 2014, all of which are incorporated herein by reference in their entireties.

BACKGROUND

1. Field of the Invention

The present invention relates to proppant storage containers. More particularly, the present invention relates to systems and methods for the delivery of proppant to a well site. More particularly, the present invention relates to containers as part of a system of storing proppant prior to delivery to a well site.

2. Description of Related Art

Hydraulic fracturing is the propagation of fractions in a rock layer caused by the presence of pressurized fluid. Hydraulic fractures may form naturally, in the case of veins or dikes, or may be man-made in order to release petroleum, natural gas, coal seam gas, or other substances for extraction. Fracturing is done from a wellbore drilled into reservoir rock formations. The energy from the injection of a highly-pressurized fracturing fluid creates new channels in the rock which can increase the extraction rates and ultimate recovery of fossil fuels. The fracture width is typically maintained after the injection by introducing a proppant into the injected fluid. Proppant is a material, such as grains of sand, ceramic, or other particulates, that prevent the fractures from closing when the injection is stopped.

With the rise of hydraulic fracturing over the past decade, there is a steep climb in proppant demand. Global supplies are currently tight. The number of proppant suppliers worldwide has increased since 2000 from a handful to well over fifty sand, ceramic proppant and resin-coat producers.

By the far the dominant proppant is silica sand, made up of ancient weathered quartz, the most common mineral in the Earth's continental crust. Unlike common sand, which often feels gritty when rubbed between the fingers, sand used as a proppant tends to roll to the touch as a result of its round, spherical shape and tightly-graded particle distribution. Sand quality is a function of both deposit and processing. Grain size is critical, as any given proppant must reliably fall within certain mesh ranges, subject to downhole conditions and completion design. Generally, coarser proppant allows the higher flow capacity due to the larger pore spaces between grains. However, it may break down or crush more readily under stress due to the relatively fewer grain-to-grain contact points to bear the stress often incurred in deep oil- and gas-bearing formations.

Typically, in any hydraulic fracturing operation, a large amount of such proppant is required. Typically, it has been difficult to effectively store the proppant at the fracturing sites. Additionally, it has been found to be rather difficult to effectively transport the proppant to the desired location. Often, proppant is hauled to the desired locations on the back of trucks and is dumped onsite. Under such circumstances, the proppant is often exposed to adverse weather conditions. This will effectively degrade the quality of the proppant during its storage. Additionally, the maintenance of proppant in containers at the hydraulic fracturing site requires a large capital investment in storage facilities. Typically, the unloading of such storage facilities is carried out on a facility-by-facility basis. As such, there is a need to be able to effectively transport the proppant to and store the proppant in a desired location adjacent to the hydraulic fracturing location.

Present methods of storing proppant for use at the well site has involved a significant investment in structural facilities. In particular, silos have been built in order to store proppant for use in the fracturing operation. Often, the silos can have a cost of several million dollars. Whenever such silos are used, there is a possibility of contamination of the proppant that is contained within the silo. Large storage facilities often mix various types and qualities of proppant. As such, lower quality proppant may be mixed with higher quality proppant so as to create an undesirable contaminated combination.

The availability of high quality proppant is always of a major concern during such fracturing operations. If the proppant is not available at the well site, then the fracturing operation can stall until such time that proppant is available. In other circumstances, the operators of the fracturing operation may be forced to use lower quality proppant in order to continue the operation. As such, there is a need to be able to have high quality proppant available at all times during the fracturing operation. It is also advantageous to provide a system which avoids the mixture of different types of proppant and to avoid the contamination of the proppant supply.

Under certain circumstances, railcars are used to deliver proppant to the fracturing location. The proppant is unloaded from the railcars into pneumatic bulk trailers. The pneumatic bulk trailers can then deliver the proppant to the well site. Often, the bulk materials train will have to remain on-site during the time the proppant remains in the bulk material train. As such, the train is not able to be used for other purposes. This adds additional cost to the fracturing operation. Ultimately, after the train is completely unloaded, a new bulk material train must be transported to the desired location and then serve as a storage facility. As such, a need is developed so as to quickly remove all of the proppant from the bulk material train and to store such proppant until such time as the proppant is needed.

In the past, various patents have issued relating to storage and transport facilities. For example, U.S. Patent Publication No. 2008/0179054, published on Jul. 31, 2008 to McGough et al., shows a bulk material storage and transportation

system. In particular, the storage system is mounted on the trailer of a truck. The storage system includes walls that define an interior volume suitable for receiving the aggregate material therein. There are hoppers provided at the bottom of the container. These hoppers have inclined walls. The hoppers can extend so as to allow the material from the inside of the container to be properly conveyed to a location exterior of the container. Actuators are used so as to expand and collapse the container.

U.S. Pat. No. 7,240,681, issued on Jul. 10, 2007 to L. Saik, describes a trailer-mounted mobile apparatus for dewatering and recovering formation sand. The trailer is mounted to a truck-towable trailer so as to receive sand therein. The container has a pair of sloping end walls. The back end of the container is suitably openable so as to allow the sand to be removed therefrom. A pneumatic or hydraulic ram is provided on the forward part of the container so as to allow the container to be lifted angularly upwardly so as to allow sand to be discharged through the gate at the rear of the container.

U.S. Pat. No. 4,247,228, issued on Jan. 27, 1981 to Gray et al., describes a dump truck or trailer with a pneumatic conveyor. The container is mounted to a frame on wheels. A hydraulic ram tilts the container for dumping through a rear outlet. A pneumatic conveyor is carried by the frame with an intake at the rear of the container. A gate allows the solids to be dumped conventionally by gravity or to be blown to a storage facility by the pneumatic container. The container has a top hatch formed therein so as to allow the solids to be introduced into the interior of the container.

U.S. Pat. No. 2,865,521, issued on Dec. 23, 1958 to Fisher et al., shows a bulk material truck that has an interior volume suitable for the receipt of bulk material therein. A pneumatic conveyer is utilized so as to allow the removal of such material from the bottom of the container. A pair of sloping walls are provided on opposite sides of the container so as to allow the bulk material within the container to be passed toward the bottom of the container. A top hatch is provided on the top of the conveyer. The pneumatic conveyer is connected to the bottom of the container.

U.S. Pat. No. 4,995,522, issued on Feb. 26, 1991, to F. M. Barr, describes a bottom dumping bulk container apparatus for a bulk granulated material. The shipping container has a lower wall with a discharge opening. Doors are provided for the opening and closing of the discharge opening. The doors are actuated by an actuating structure which is mounted for vertical movement relative to the container. The actuating structure has upper portions which serve as conventional lifting connectors or receptacles at corners of the container. These cooperate with conventional hooks so that raising the actuating structure opens the door and lowering the actuating structure closes the door. This permits granulated material within the container to be dumped into a lower container or conveyance without requiring specialized lifting or opening equipment.

U.S. Pat. No. 6,401,983, issued on Jun. 11, 2002 to McDonald et al., provides a bulk cargo container for storing and transporting solid and liquid bulk materials. The bulk cargo container includes a vessel suitable for containing the bulk material and a supporting frame assembly having a generally horizontally-disposed support member attachment. The container portion is formed into at least one hopper having a discharge opening therein suitable for discharging bulk material contained within the vessel.

U.S. Pat. No. 4,138,163, issued on Feb. 6, 1979 to Calvert et al., discloses a bulk material container for the handling of flowable particulate materials. This container has a closed, generally rectangular parallelpiped structure with side walls, end walls and a roof. Conduits permit the introduction and withdrawal of particulate material to and from the container body. The lower base portion supports a vertical flexure panel at each corner thereof. The vertical flexure panel supports opposed pairs of longitudinal and transverse flexure panels between the tops thereof.

U.S. Pat. No. 4,909,556, issued on Mar. 20, 1990 to T. Koskinen, provides a transport container for the transport of bulk material. This transport container has a filling-hole in the upper part and an emptying device in the rear. For the loading and unloading, a side section is provided that can be opened. An emptying device, in the nature of a pneumatic pressure discharger, allows the material to freely flow from the containers through a check valve.

U.S. Pat. No. 7,967,161, issued on Jun. 28, 2011 to A. M. Townsend, provides a shipping container liner system for the shipping of bulk flowable materials. The system has a specially-adapted shipping container liner that is self-supporting without the need for rear-mounted rigid supportive bars to retain the liner within the shipping container during filling and discharge. The system has an arrangement of interior support baffles operating in conjunction with a plurality of exterior anchor straps adapted to distribute the cargo load throughout the length of the container.

U.S. Pat. No. 5,690,466, issued on Nov. 25, 1997 to Gaddis et al., shows slope plate for a particulate material truck box. The slope plate assembly includes a plurality of slope plate sections pivotally connected to the opposite side walls of the truck box so as to be movable between a raised inoperative position and a lowered operative position. In the lowered position, particulate material flows by gravity along the slope plate sections for discharge into an auger assembly residing below the floor of the truck box. In the raised position, bulk material or other cargo can be loaded into the truck box.

It is the object of the present invention to provide a system for the storage and transport of proppant that is mobile, scalable and flexible.

Another object to the present invention to provide a system for the storage and transport of proppant that can be located in proximity to the rail spur.

Another object of the present invention to provide a system for the transport and storage of proppant that can be rapidly implemented.

Another object of the present invention to provide a system for the storage and transport of proppant that occupies a small footprint.

The further object of the present invention to provide a system for the storage and transport of proppant that assures a continuous inventory of proppant to the fracturing operation.

Still another object of the present invention is to provide a system for the storage and transport of proppant that is movable and rechargeable at the drill site.

The further object of the present invention is to provide a system for the storage and transport of proppant that enhances the productivity of the proppant supplier.

The further object of the present invention to provide a system for the storage and transport of proppant that reduces driver fatigue.

Another object of the present invention to provide a system for the storage and transport of proppant that reduces liabilities.

The further object of the present invention to provide a system for the storage and transport of proppant that improves safety.

Further object of the present invention to provide a system for the storage and transport of proppant that is compliant with Department of Transportation regulations.

Still another object of the present invention to provide a system for the storage and transport of proppant which improves the profits for the proppant supplier.

These and other objects and advantages of the present invention will become apparent from a reading of the attached specification and appended claims.

SUMMARY

The present invention is an apparatus for proppant storage. This apparatus comprises a container having a bottom wall, a top wall, a pair of side walls, and a pair of end walls. The pair of side walls extend between the pair of end walls and between the bottom wall and the top wall. The container has an interior volume. A hatch is positioned on the top wall. This hatch is openable so as to allow the proppant to be introduced into the interior volume of the container. A flow gate is positioned on one of the end walls. The flow gate is openable so as to allow the proppant to flow outwardly of the interior volume of the container.

In the apparatus of the present invention, at least one of the end walls is recessed inwardly of the end of the pair of side walls and inwardly at the bottom wall and inwardly at the top wall. This end wall has a generally convex shape. A proppant inlet is affixed to the end wall. The proppant inlet communicates with the interior volume of the container. The proppant inlet is suitable for allowing proppant to be introduced into the interior volume of the container. A vent also opens to the interior volume. This vent is formed at an upper portion of one of the pair of end walls.

A longitudinal member is positioned in the interior volume of the container. The longitudinal member has one end affixed to one of the pair of end walls and an opposite end affixed to the other of the pair of end walls. A first cross member is positioned in the interior volume of the container. The first cross member has one end affixed to one of the pair of side walls and an opposite end affixed to the other of the pair of side walls. A second cross member is positioned in the interior volume of the container and in spaced relationship to the first cross member. The second cross member has one end affixed to one of the pair of side walls and an opposite end affixed to the other of the pair of side walls. A flow gate is positioned on one of the end walls generally adjacent to the bottom wall. This flow gate is slidable between an open position and a closed position.

The present invention is also a method of delivering proppant that comprises the steps of: (1) transporting a load of proppant in a vessel to a desired location; (2) moving the load of proppant from the vessel into a container so as to create a proppant-loaded container; (3) unloading the proppant-loaded container into a pneumatic bulk trailer; and (4) transporting the unloaded proppant in the pneumatic bulk trailer to a well site.

The vessel is a hopper of a bulk material train. The step of transporting includes loading the hopper with proppant in a remote location and then transporting the loaded proppant in the hopper of the bulk material train to the desired location. The step of moving includes conveying the proppant from the hopper of the bulk material train into a hatch formed at the top of the container.

The container can be placed onto the bed of a truck. The truck is moved so that the container is adjacent to the vessel. As such, the empty container is available so that the proppant can be conveyed from the hopper of the bulk material train into the interior volume of the container.

The step of unloading includes placing the proppant-loaded container onto a tilting mechanism, tilting the placed proppant-loaded container to an angle such that an end wall of the container faced downwardly at an angle, and discharging the proppant from the tilted container to a flow gate of the container. The proppant flows through the container of the flow gate into a hopper. This flowed proppant is conveyed from the hopper into the pneumatic bulk trailer. Air is injected into the container as the proppant flows through the flow gate. A plurality of the proppant-loaded containers can be stacked at the desired location prior to the step of unloading.

The present invention is also a method of delivering and storing proppant for use at the well site. This method includes the steps of: (1) transporting the load of proppant in a vessel to a desired location; (2) moving the load of proppant from the vessel into a plurality of containers so as to create a plurality of proppant-loaded containers; (3) stacking the plurality of proppant-loaded containers at the desired location so as to form a stack of the proppant-loaded containers; (4) lifting an upper most proppant-loaded container from the stack; (5) moving the upper most proppant-loaded container to a tilting mechanism; and (6) tilting the proppant-loaded container by the tilting mechanism so as to discharge the proppant from the container.

The discharged container can be transported to another stack of empty containers or to a position adjacent to the proppant-containing vessel. The proppant is discharged to a flow gate of the tilted proppant-loaded container into a hopper. The proppant from the hopper can be conveyed into a pneumatic bulk loader. The transported conveyed proppant in the pneumatic bulk trailer can then be transported to the well site.

BRIEF DESCRIPTION OF THE DRAWINGS

FIG. **1** is a prospective view of the container apparatus as used in the system of the present invention.

FIG. **2** is an end view of the container apparatus as used in the system of the present invention.

FIG. **3** is an illustration of the system of the present invention.

DETAILED DESCRIPTION

Referring to FIG. **1**, there is shown the proppant storage apparatus **10** in accordance with the preferred embodiment of the present invention. The proppant storage apparatus **10** includes a container **12** having a bottom wall **14**, a top wall **16**, a pair of side walls **18** and **20** and a pair of end walls **22** and **24**. The side wall **18** extends between the bottom wall **14** and the top wall **16**. The side wall **20** also extends between the bottom wall **14** and the top wall **16** in generally spaced parallel relationship to the side wall **18**. The end wall **22** extends between the bottom wall **14** and the top wall **16**. Similarly, the end wall **24** extends between the bottom wall **14** and the top wall **16** and also between the side walls **18** and **20**. The top wall **16** has a hatch **26** formed thereon. Hatch **26** is openable so as to allow proppant to be introduced into the interior volume of the container **12**. A flow gate **28** is positioned on the end wall **22**. The flow gate **28** is openable so as to allow the proppant to flow outwardly of the interior volume of the container **12**.

It can be seen that the end wall **22** is recessed inwardly of an end of the pair of side walls **18** and **20** and inwardly of

the bottom wall **14** and the top wall **16**. As such, the outermost end **30** of the container **12** will provide a protective structure for the generally convex surface of the end wall **22**. This convex shape of the end wall **22** facilitates the ability to funnel the proppant from within the interior volume of container **12** outwardly through the flow gate **28**. The frame structure at the end **30** enhances the structural integrity of the container **12** at this end while protecting the mechanical structures associated with the flow gate **28**. The flow gate **28** is slidable upwardly so as to open to the interior volume. An inlet **32** is generally positioned at the end wall **22** and opened through the end wall **22** to the interior volume of the container **12**. This proppant inlet is suitable for allowing proppant and/or air to be introduced into the interior volume of the container. As such, when the container **12** is at a well site or other location, additional proppant can be introduced into the interior volume of the container **12** through the proppant inlet **32**. Inlet **32** also allows air to be introduced into the interior volume of the container **12** so as facilitate the ability of the proppant within the container **12** to exit through the flow gate **28**. The inlet **32** is in the nature of a tube that can be connected to a suitable hose. A vent **34** is also positioned at the end wall **22**. Vent **34** opens to the interior volume of the container **12** so as to allow excess air pressure to exit outwardly of the container **18**.

The container **10** is configured so as to contain 96,000 pounds of proppant therein. Since each railcar can transport 192,000 pounds of proppant, a pair of containers **12** can receive all of the proppant from the railcar. However, conventional shipping containers could lack the structural integrity to contain such a large weight. As such, the proppant storage apparatus **10** includes an interior structure which enhances the integrity of the container **12** for its intended purpose.

In particular, a longitudinal member **36** is positioned in the interior volume of the container **12**. Longitudinal member **36** extends generally centrally of the interior volume of the container **12**. The longitudinal member **36** has one end rigidly affixed to the end wall **22** and an opposite end rigidly affixed to the end wall **24**. This connection will maintain the integrity of the end walls **22** and **24** in spite of the large weight of proppant urging thereagainst. A first cross member **38** is positioned within the interior volume of the container **12**. The first cross member **38** has one end affixed to the side wall **18** and an opposite end affixed to the side wall **20**. A second cross member **40** is also positioned in the interior volume of the container and is in generally spaced parallel relationship to the first cross member **38**. Each of the cross members **38** and **40** is positioned generally centrally with respect to the height of the container **12**. The second cross member has one end affixed to the side wall **18** and an opposite end affixed to the side wall **22**. The cross member **38** and **40** are configured so as to maintain the integrity of the side walls **18** and **20** against the large weight of proppant contained within the interior volume of the container **12**.

FIG. **2** is an end view showing the proppant storage apparatus **10** of the present invention. In particular, the end wall **22** of the container **12** is illustrated as having a hatch **28** slidably received within guides **42** thereon. Suitable hydraulic or pneumatic mechanisms can be associated with the flow gate **28** so as to raise or lower the flow gate **28**. In the lowered position, the flow gate **28** locks the flow of proppant from the interior volume of the container **12**. In the raised position, the flow gate **28** will open to the interior volume of the container **12** so as to allow proppant to be discharged therefrom. The proppant inlet **32** and the vent **34** are illustrated as positioned on the end wall **22**.

Within the concept of the present invention, it is advantageous to be able to stack several containers on top of one another. As such, the end surface **30** has structural uprights **44** and **46** thereon. Similarly, horizontal structural members **48** and **50** will extend between the structural uprights **44** and **46** at the top and bottom of the container **12**. The structural members enhance the integrity of the container so that a large amount of weight can be stacked upon the container **12**. Again, the structural members **44**, **46**, **48** and **50** enhance the integrity of the container **12** to the heavy weight supported therein.

FIG. **3** shows a system **60** of the present invention. The system **60** initially involves the transport of a load of proppant to a desired location in a vessel **62**. The vessel **62** is in the nature of hoppers associated with a bulk material train **64**. The bulk material train **64** is driven by an engine **66** located on a rail spur **68**. As such, in the present invention, the bulk material is delivered by the bulk material train **64** to the desired location. The vessel **62** of the bulk material train **64** can be immediately unloaded at this desired location so that the engine **66** can return the bulk material train **64** for other railroad usages.

The rail spur **68** is illustrated as being located in an elevated location. As such, containers **70**, **72**, **74** and **76** can be located in proximity to the vessel **62** and adjacent to the bulk material train **64**. Each of the containers **70**, **72**, **74** and **76** has a configuration similar to that shown herein in association with FIGS. **1** and **2**.

The hatch on the top wall **78** of the container **70** is illustrated as being adjacent to a conveyer **80** associated with the vessel **62**. In other words, the hopper of the bulk material train **64** is opened adjacent to the conveyer **80**. The conveyer **80** extends between the gate of the vessel **62** and the hatch at the top wall **78** of the container **70**. Once this hopper of the bulk material train **64** is unloaded into the vessel **70**, the conveyer **80** can be moved forwardly along the bulk material train **64** so that another hopper can discharge its proppant content into the container **72** of truck **82**. The containers **70** and **72** are supported on the bed of the truck **82**. Similarly, a conveyer **84** allows the unloading of another hopper of the bulk material train **64** into the container **74**. The container **76** can be maintained in proximity to another hopper of the bulk material train **64** so that further unloading can occur.

A container loader/unloader **86** is positioned so as to allow for the lifting and transport of the containers **70**, **72**, **74** and **76**. In particular, in FIG. **3**, in can be seen that the container loader/unloader **86** has removed the containers from the truck **88** and has placed containers **92** and **92** upon tilting mechanisms **94** and **96**, respectively. The tilting mechanisms **94** and **96** include a support panel that is pivotally connected to a frame. A hydraulic mechanism can then pivot the plate upwardly so that the container **90** is tilted so that the end wall faces at an angle downwardly toward a hopper **98**. The tilting mechanism **96** also includes a similar structure such that the end wall of the container **92** is directed downwardly toward the hopper **100**. The tilting mechanisms **94** and **96** allow proppant to be discharged in a very fast, convenient and safe manner into the respective hoppers **98** and **100**.

A conveyer **102** extends to the bottom of the hopper **98** and to the top of a pneumatic bulk trailer **104**. As a result, the proppant that is discharged through the flow gate at the end wall of the container **92** into the hopper **98** is transported by the conveyer **102** into the pneumatic bulk trailer **104**. Similarly, another conveyer **106** extends from the hopper **100** to another pneumatic bulk trailer **108** so as to discharge proppant into the pneumatic bulk trailer. When each of the

pneumatic bulk trailers **108** has been filled with proppant, these pneumatic bulk trailers **104** and **108** can then transport the proppant to the well site.

Flatbed trucks **110** and **112** are in line for receiving additional containers **114**. Truck **112** is positioned adjacent to the container **114** so that the container loader/unloader **116** can place the containers onto the flatbed of the truck **112**. Truck **112** can then move to another position adjacent to the bulk material train **64** for the further unloading of the hoppers associated therewith. As such, it can be seen that the staging of the various flatbed trucks allows for the efficient and effective removal of the proppant from the hoppers of the bulk material train **64**.

In FIG. **3**, the containers **114** are arranged in a stacked configuration. The containers **114**, as illustrated in FIG. **3**, are stacked in a five-high stack since the containers are empty. However, within the concept of the present invention, if it is possible to unload the bulk material train **64** faster than the bulk material trailers **104** and **108** are available, then the filled containers can also be arranged in a stack. Typically, the containers can only be stacked four-high in view of large weight supported therein. These containers can be stacked until such time as proppant is required or until such time as equipment is available for the unloading of such containers.

Each of containers as utilized in the system of the present invention is a specially designed 8 foot by 20 foot container that is capable of containing 96,000 pounds of proppant. The containers can be moved by flatbed, low bed and container chassis that are accessible and economical. The facilities, such as illustrated in FIG. **3**, requires only 1.5 acres to manage 45 million pounds of proppant. Empty containers can be stacked five-high and full containers can be stacked three or four high. Lashing can be used to ensure safety. The containers associated with the present invention allow proppant to be removed in an efficient and effective manner. Air can be injected through the inlet so as to facilitate the flow of proppant outwardly at the flow gate. In this arrangement, it has been found that 90,000 pounds of proppant can be unloaded in fifteen minutes.

Each of the containers can be arranged as to store 360,000 pounds of proppant per 160 square feet of footprint. The unloading equipment can unload one railcar in less than twenty minutes or unload a 120 car unit train in less than 48 hours. Multiple railcars can be unloaded at the same time.

The arrangement of containers is scalable for as much or as little proppant as required. A WMS inventory control system can be utilized. In such a system, each container can be bar-coded (using bar codes or logging mechanisms **49**) and logged-in to track the amount of proppant on hand by the mesh size of the proppant. Once the containers are loaded, they can be easily and safely stacked up in yards. As such, air space is utilized as opposed to yard space. All that is required is a solid foundation and proper container handling equipment.

The proppant is unloaded from containers to pneumatic bulk trailers. As such, the proppant will stay dry and would be manipulated less then flat-stored proppant. When the proppant is ordered, the container-moving machines move the container to hydraulic chassis. Proppant is then dumped into the hoppers. An airbox is utilized so as to blow the proppant out of the container.

The process of the present invention ensures close proximity of the site to the rail spur. The process of the present invention can be rapidly implemented when compared to silo facilities. Typically, such silo facilities can take up to two years to build. The number of containers is scalable for inventory requirements. A mini-stack of containers can be moved and recharged at the drill site so as to ensure continuous inventory for the fracturing operation. The system of the present invention can move the inventory closer to the production field then the prior art.

The present invention provides a lower overall cost per ton of proppant. In particular, the empty containers can be staged on-site at the mine. This serves to smooth out productivity for the proppant supplier. It also serves to improve throughput/profits for the proppant supplier. Any over supplies or leftover production can be stored on-site. This allows the company to negotiate better rates in exchange for helping the proppant supplier with their supply chain problems.

In contrast to prior systems where the pneumatic bulk trailer continually moves back and forth from the bulk material train to the well site, the present invention allows for the storage of such proppant in a location adjacent to the rail line. As a result, the truck drivers can have reduced fatigue. A safer work environment is promoted by the system of the present invention. A higher quality driver pool is maintained. Additionally, this system complies with Department of Transportation regulations.

This application claims the benefit of, and is a continuation of U.S. patent application Ser. No. 14/851,005, filed Sep. 11, 2015, titled "Methods of Storing and Moving Proppant at Location Adjacent Rail Line," which is a continuation of U.S. patent application Ser. No. 14/314,468, filed Jun. 25, 2014, titled "Methods of Storing and Moving Proppant at Location Adjacent Rail Line," now U.S. Pat. No. 9,162,603, issued Oct. 20, 2015, which is a continuation of U.S. patent application Ser. No. 14/310,648, filed Jun. 20, 2014, titled "Method of Delivering, Transporting, and Storing Proppant for Delivery and Use at a Well Site," now U.S. Pat. No. 9,248,772, issued Feb. 2, 2016, which is a continuation of PCT Application No. PCT/US13/32819, filed on Mar. 18, 2013, titled "System of Delivering and Storing Proppant for Use at a Well Site and Container for Such Proppant," which claims the benefit of U.S. patent application Ser. No. 13/427,140, filed on Mar. 22, 2012, titled "System of Delivering and Storing Proppant for Use at a Well Site and Container for Such Proppant," now U.S. Pat. No. 8,622,251, issued on Jan. 7, 2014, which is a continuation-in-part of U.S. patent application Ser. No. 13/332,937 filed on Dec. 21, 2011, titled "Proppant Storage Vessel and Assembly Thereof," now U.S. Pat. No. 8,827,118, issued on Sep. 9, 2014, all of which are incorporated herein by reference in their entireties.

The foregoing disclosure and description of the invention is illustrative and explanatory thereof. Various changes in the details of the illustrated construction can be made within the scope of the appended claims without departing from the true spirit of the invention. The present invention should only be limited by the following claims and their legal equivalents.

That claimed is:

1. A method of storing and moving fracking proppant at a desired location, the method comprising:

a) stacking a plurality of containers separate from a vehicle on top of one another so that a bottom of one of the plurality of containers overlies the top of another one of the plurality of containers to thereby define a stack, the stack positioned at a desired location, the structural integrity of the plurality of containers being enhanced by a plurality of structural uprights positioned to extend from the bottom to the top of each of the plurality of containers and thereby increase the

weight carrying capacity of each of the plurality of containers when fracking proppant is positioned therein;

b) placing one or more of the plurality of containers from the stack onto one or more trailers of one or more vehicles by use of a container loader/unloader;

c) moving the plurality of containers when positioned on the one or more trailers away from the stack of the plurality of containers; and

d) scaling the number of the plurality of containers according to the amount of proppant required at a particular location, each of the plurality of containers positioned to include an outlet adjacent the bottom for discharge of proppant therefrom, an opening adjacent the top thereof to load proppant therein, a pair of spaced-apart end walls connected to and extending between the bottom and the top, and a pair of side walls connected to and extending between the pair of end walls and the top and the bottom, each of the plurality of containers further includes one or more structural support members extending and positioned at intervals between the pair of end walls and the pair of side walls of each container.

2. The method of claim **1**, further comprising:

before step a), transporting proppant to the desired location, the desired location being on a rail line, on one or more railcars, each railcar configured to transport an amount of proppant equal to or greater than the amount of proppant required to fill at least two of the plurality of containers.

3. The method of claim **1**, wherein the moving includes positioning each of the plurality of containers when proppant is contained therein adjacent a fracturing operation of a production field.

4. The method of claim **1**, further comprising a flow gate positioned adjacent the outlet to control flow of proppant through the outlet.

5. The method of claim **4**, further comprising:

tracking the amount of proppant on hand at the location with bar-codes or logging mechanisms, and injecting air into each of the plurality of containers to enhance flow of proppant from the outlet of each of the plurality of containers adjacent the flow gate.

6. The method of claim **4**, further comprising:

tracking the mesh size of the proppant in the containers at the location with bar-codes or logging mechanisms.

7. The method of claim **1**, wherein the plurality of containers each has proppant therein and includes up to four containers, wherein the up to four containers are positioned in the stack, wherein the stack comprises a first stack, wherein the method further comprises stacking another plurality of containers that each have proppant therein closely adjacent the first stack thereby to define a second stack, and wherein the one or more structural support members include a plurality of cross members.

8. The method of claim **5**, further comprising staging a plurality of empty containers at a proppant site.

9. The method of claim **1**, wherein the outlet of each of the plurality of containers is positioned in a substantially central portion of the bottom of the container, wherein the one or more structural support members of each of the plurality of containers further includes a plurality of horizontal structural members extending between the plurality of structural uprights.

10. The method of claim **1**, further comprising:

positioning prongs of a forklift in one or more slots positioned adjacent the bottom of each of the plurality of containers in a defined region thereby to enhance lifting and positioning of the containers for stacking and moving.

11. A method of storing and moving fracking proppant at a desired location, the method comprising:

a) removing proppant for fracking from a railcar;

b) storing the proppant in a plurality of containers separate from the railcar, each container of the plurality of containers comprising:

an opening adjacent the top thereof to receive proppant into the container, a pair of spaced-apart end walls connected to and extending between the bottom and the top, and a pair of sidewalls connected to an extending between the pair of end walls and the top and the bottom, and one or more structural support members extending between the pair of end walls and one or more structural support members extending between the side walls;

an outlet adjacent a bottom for discharge of proppant therefrom;

a flow gate positioned adjacent the outlet to control flow of proppant through the outlet; and

c) transporting one or more of the plurality of containers with one or more vehicle trailers;

d) removing the one or more of the plurality of containers from the one or more vehicle trailers; and

e) scaling the number of containers at the desired location according to the amount of proppant required at a particular location, each of the plurality of containers has a plurality of structural uprights positioned to extend from the bottom to the top of each of the plurality of containers at intervals between the side walls and the end walls to thereby increase the weight carrying capacity of each of the plurality of containers.

12. The method of claim **11**, wherein step b) further comprises:

stacking the plurality of containers on top of one another so that a bottom of one of the plurality of containers overlies the top of another one of the plurality of containers to thereby define a stack to reduce the footprint of the stored containers.

13. The method of claim **12**, wherein the plurality of containers that each has proppant therein includes two or more containers, wherein the two or more containers are positioned in the stack, wherein the stack comprises a first stack, and wherein the method further comprises stacking another plurality of containers that each have proppant therein closely adjacent the first stack thereby to define a second stack.

14. The method of claim **11**, further comprising:

before step a), transporting proppant to the location adjacent a rail line on one or more railcars, each railcar configured to transport an amount of proppant equal to or greater than the amount of proppant required to fill at least two of the plurality of containers.

15. The method of claim **11**, wherein the transporting includes positioning each of the plurality of containers that has proppant contained therein adjacent a fracturing operation of a production field.

16. The method of claim **11**, further comprising:

tracking the amount of proppant on hand at a location with bar-codes or logging mechanisms.

17. The method of claim **16**, further comprising:

tracking the mesh size of the proppant in the containers at the location with bar-codes or logging mechanisms.

18. The method of claim **11**, further comprising staging a plurality of empty containers at a proppant site.

19. The method of claim 11, wherein the outlet of each of the plurality of containers is positioned in a substantially central portion of the bottom of the container, and wherein the method further includes injecting air into each of the plurality of containers to enhance flow of proppant from the outlet of each of the plurality of containers adjacent the flow gate when discharging proppant therefrom.

20. The method of claim 11, further comprising:

positioning prongs of a forklift in one or more slots positioned adjacent the bottom of each of the plurality of containers in a defined region to thereby enhance lifting and positioning of the containers for stacking and moving the plurality of containers.

* * * * *