US009056360B2

(12) **United States Patent**
Ast et al.

(10) **Patent No.: US 9,056,360 B2**
(45) **Date of Patent: Jun. 16, 2015**

(54) **MULTI-BLADE CUTTING AND DRILLING FINISHING TOOL**

(75) Inventors: **Holger Ast**, Albstadt (DE); **Lutfi Bozkurt**, Winterlingen (DE); **Peter Sommerfeldt**, Hallungen (DE); **Jochen Bitzer**, Albstadt-Truchtelfingen (DE)

(73) Assignee: **Guehring OHG**, Albstadt (DE)

(*) Notice: Subject to any disclaimer, the term of this patent is extended or adjusted under 35 U.S.C. 154(b) by 1059 days.

(21) Appl. No.: **13/145,720**

(22) PCT Filed: **Nov. 12, 2009**

(86) PCT No.: **PCT/DE2009/001590**

§ 371 (c)(1),
(2), (4) Date: **May 18, 2012**

(87) PCT Pub. No.: **WO2010/054637**

PCT Pub. Date: **May 20, 2010**

(65) **Prior Publication Data**

US 2012/0321402 A1 Dec. 20, 2012

(30) **Foreign Application Priority Data**

Nov. 12, 2008 (DE) 10 2008 056 840

(51) **Int. Cl.**
B23D 77/00 (2006.01)
B23D 77/02 (2006.01)
B23D 77/14 (2006.01)

(52) **U.S. Cl.**
CPC ***B23D 77/02*** (2013.01); *Y10T 408/45* (2015.01); *Y10T 408/892* (2015.01); *Y10T 408/455* (2015.01); *Y10T 408/906* (2015.01); ***B23D 77/14*** (2013.01); *B23D 2277/02* (2013.01);

(Continued)

(58) **Field of Classification Search**
CPC B23D 77/006; B23D 77/003
USPC ..... 408/57, 59, 224, 117, 118, 145, 238, 408/239 A, 80, 81, 82, 83
See application file for complete search history.

(56) **References Cited**

U.S. PATENT DOCUMENTS

2,610,529 A * 9/1952 Atkinson 408/59
3,199,382 A 8/1965 Andreasson

(Continued)

FOREIGN PATENT DOCUMENTS

JP 01-060823 U 4/1989
JP 2000-000719 1/2000
JP 2007-044846 2/2007

Primary Examiner — Daniel Howell
Assistant Examiner — Nicole N Ramos
(74) *Attorney, Agent, or Firm* — Burr & Brown, PLLC

(57) **ABSTRACT**

Described is a multi-blade cutting and drilling finishing tool for machining deep or stepped bores. The tool comprises at least a first blade set having a nominal diameter and blades distributed essentially uniformly over the circumference. In order to make it easier to guide the tool along the central axis, a guiding strip set in the form of very accurately positioned cutting inserts is located axially behind the first blade set with respect to the axial direction of the tool in which the tool advances forward to machine the deep or stepped bores. Each of the cutting inserts is aligned with one of the blades of the first blade set in a direction parallel to an axis of the tool, and each of the cutting inserts has a nominal diameter which is smaller than the nominal diameter of the first blade set by essentially twice the size of a lubrication gap forming between the guiding strip set and the deep or stepped bores when the tool is used.

19 Claims, 8 Drawing Sheets

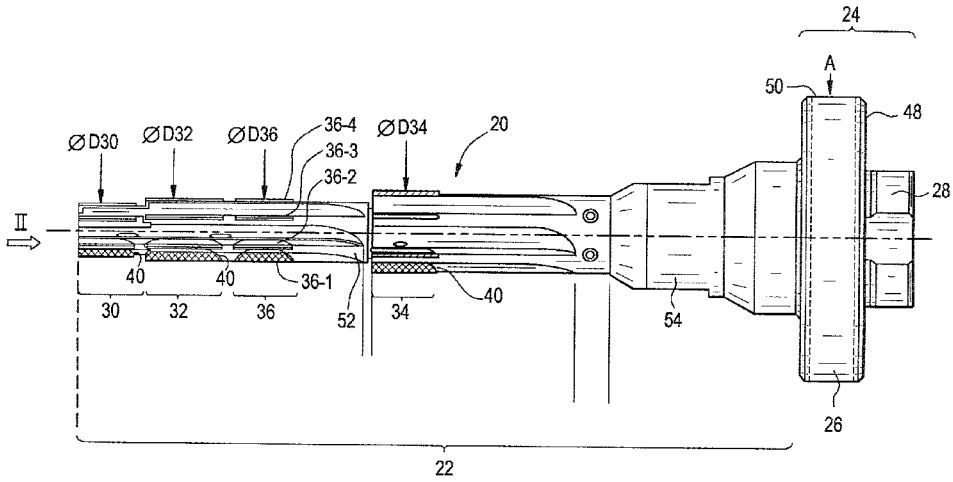

(52) **U.S. Cl.**
CPC *B23D2277/205* (2013.01); *B23D 2277/245* (2013.01); *B23D 2277/46* (2013.01)

(56) **References Cited**

U.S. PATENT DOCUMENTS

3,216,107	A	*	11/1965	Andreasson	407/1
3,543,613	A	*	12/1970	Obloy	408/57
3,591,302	A	*	7/1971	Andreasson	408/59
3,597,817	A	*	8/1971	Whalley	407/11
4,705,435	A	*	11/1987	Christoffel	408/59
5,221,165	A	*	6/1993	Goszczynski	408/1 R
5,282,705	A	*	2/1994	Shiga et al.	408/211
5,326,195	A	*	7/1994	Brox	407/32
5,391,023	A	*	2/1995	Basteck	408/146
5,921,727	A	*	7/1999	Depperman	408/144
6,033,159	A	*	3/2000	Kress et al.	408/83
6,913,428	B2	*	7/2005	Kress et al.	408/144
7,717,651	B2	*	5/2010	Haberle et al.	408/24
7,896,588	B2	*	3/2011	Ananolli	408/81
2007/0172322	A1	*	7/2007	Haberle et al.	408/22
2009/0116913	A1	*	5/2009	Xiao et al.	408/1 R

* cited by examiner

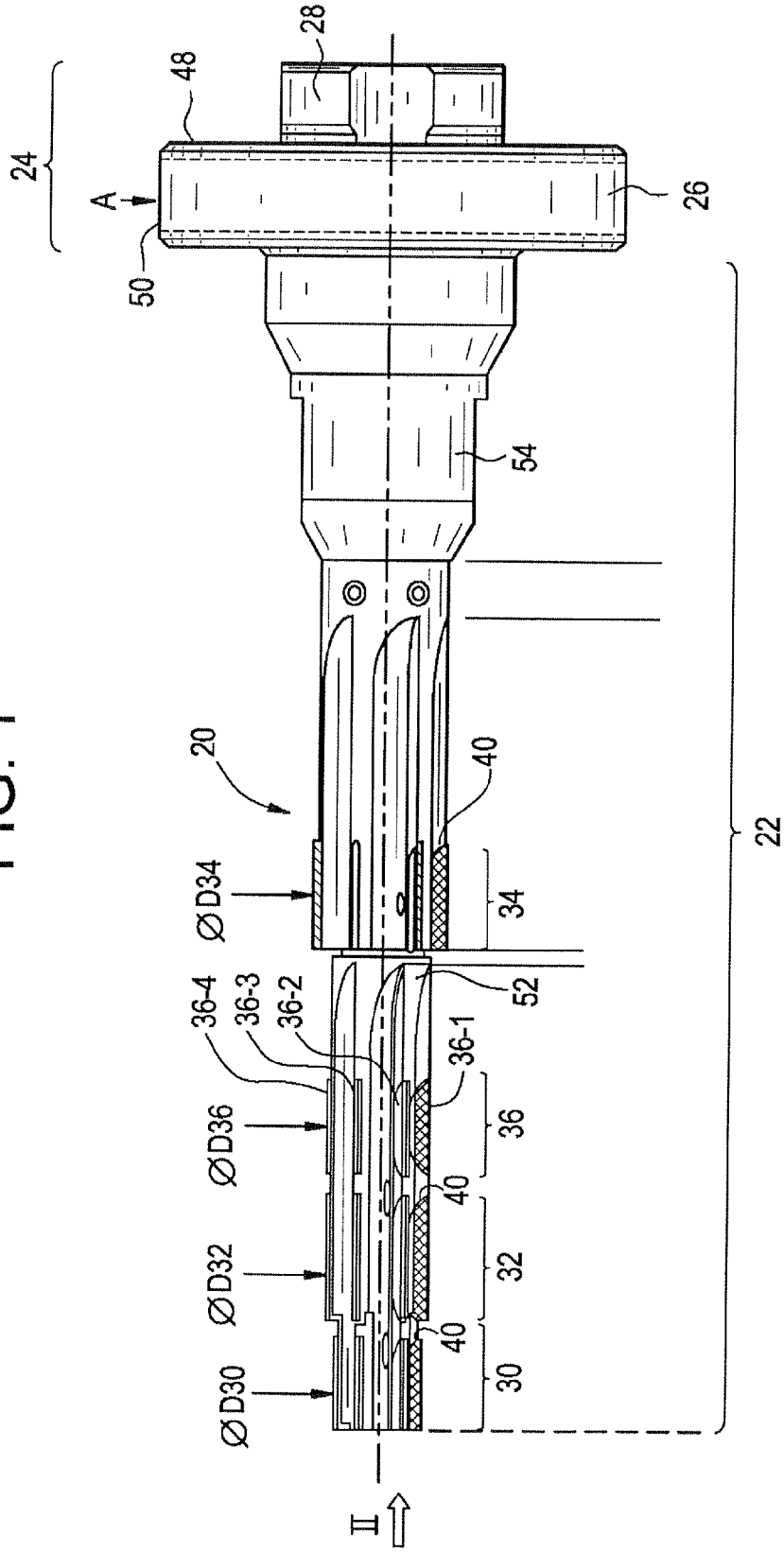
28
48
24
A
50
26
54
20
40
22
ØD34
34
52
36-4
36-3
36-2
36-1
ØD36
36
40
ØD32
32
40
ØD30
30
II

FIG. 1

FIG. 3

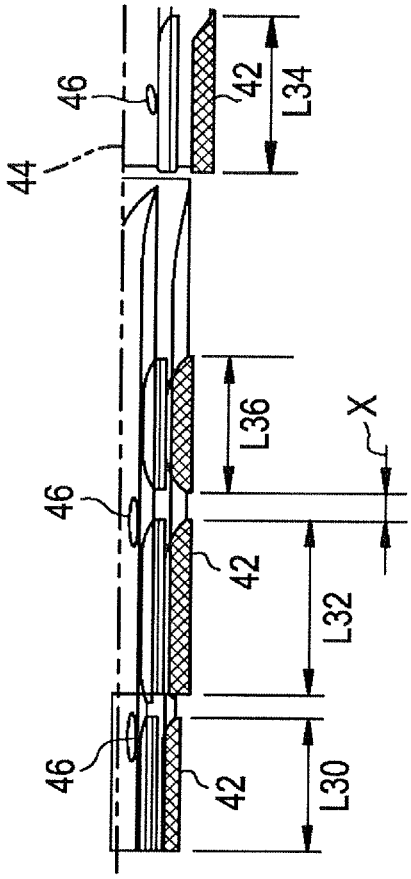

FIG. 2

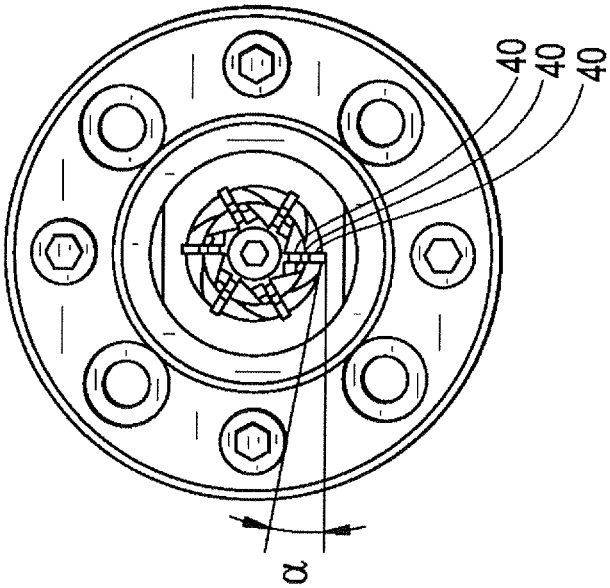

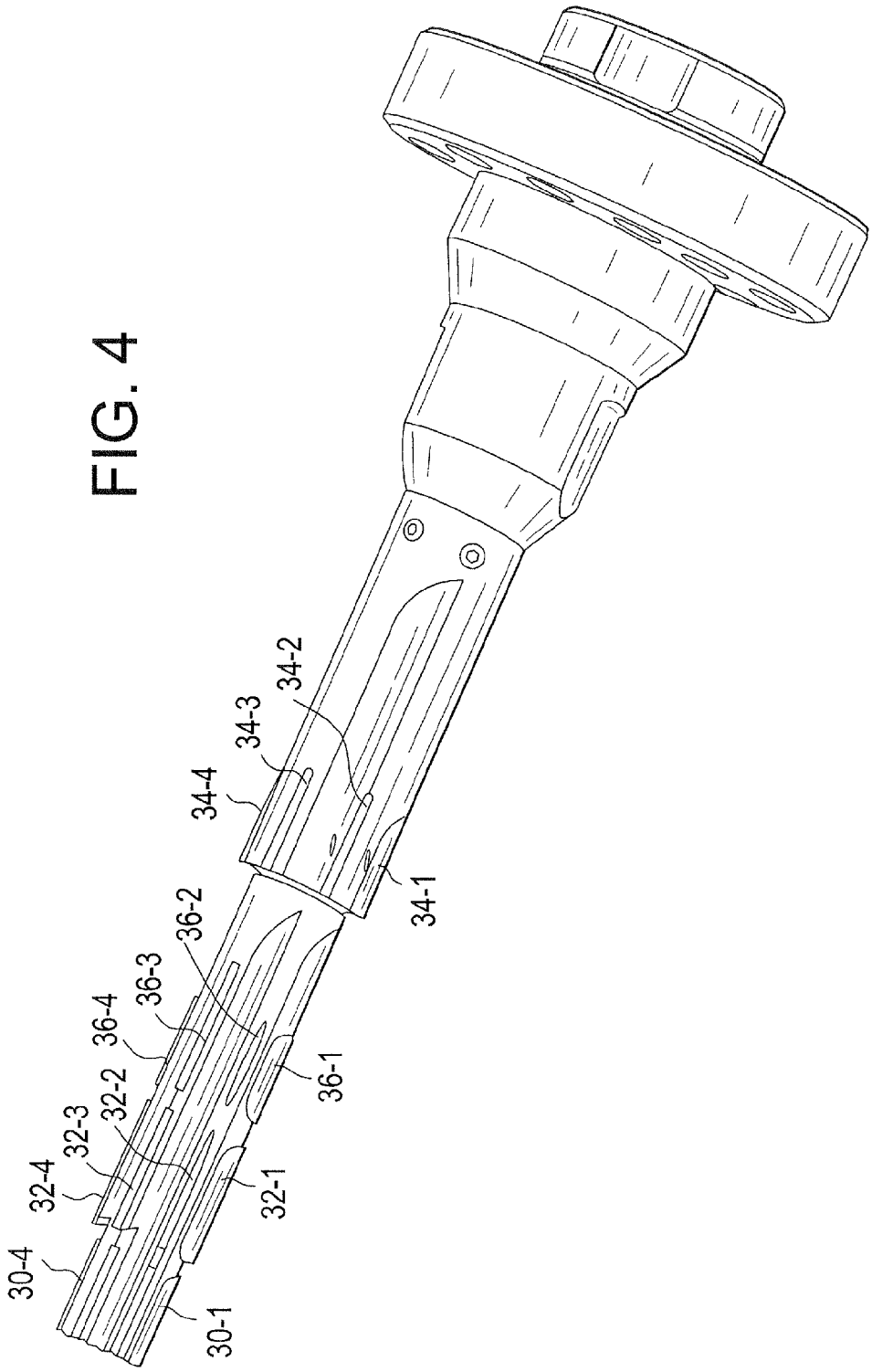

FIG. 4

FIG. 5

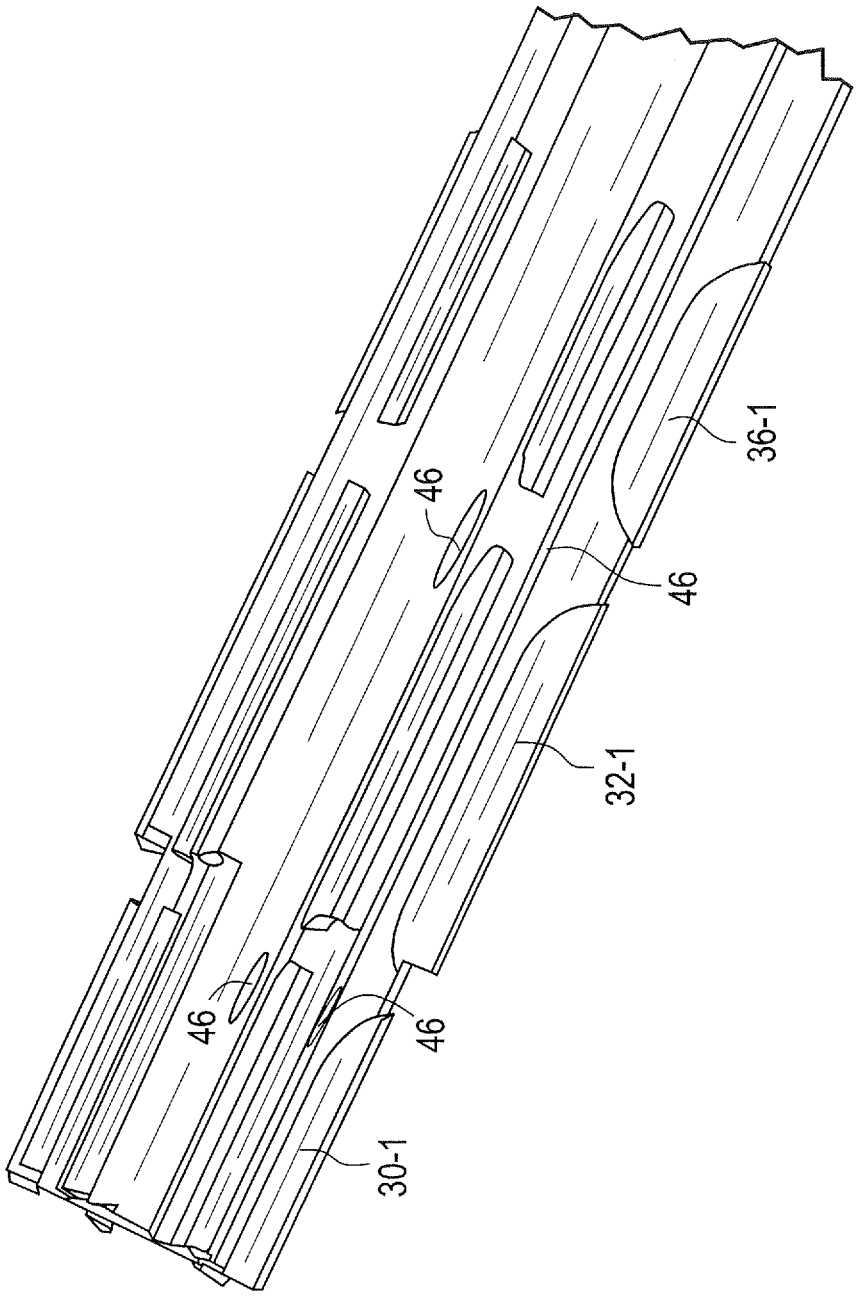

FIG. 6

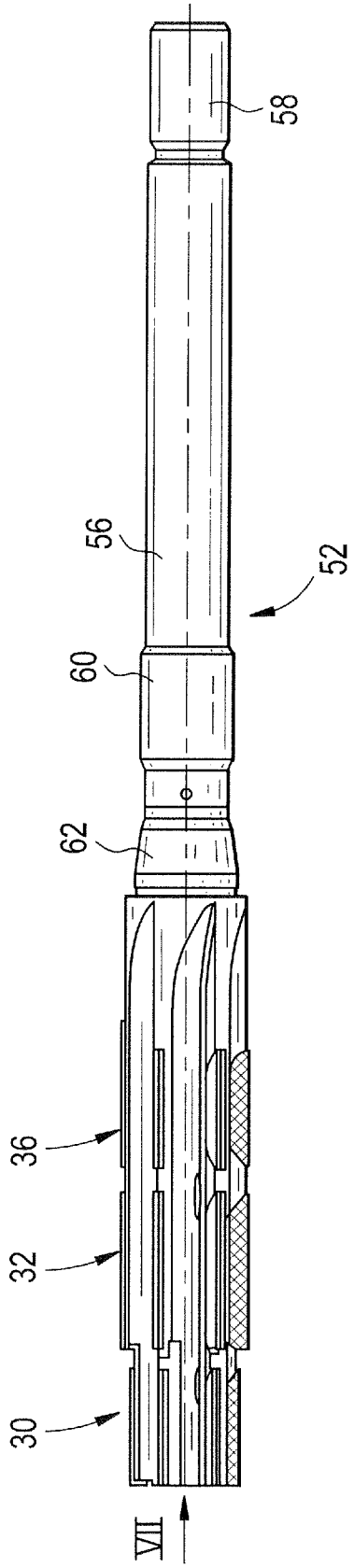

FIG. 8

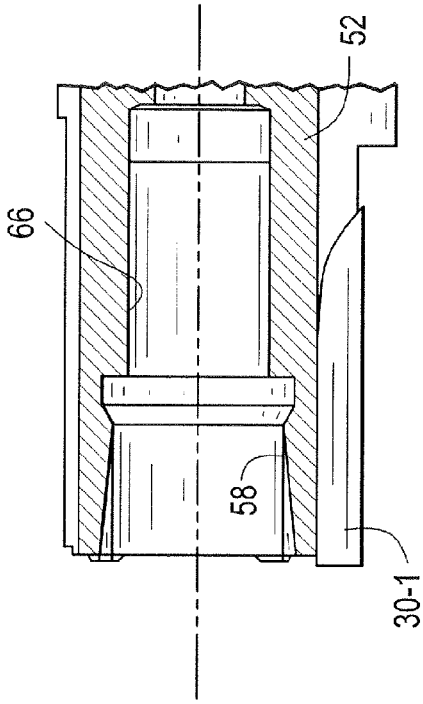
66
58
52
30-1

FIG. 7

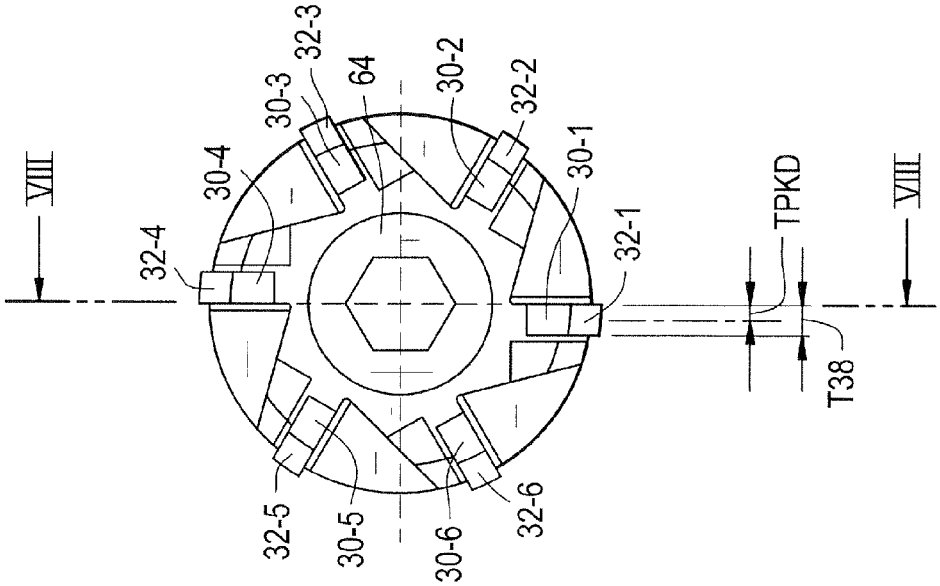
VIII
32-4
30-4
30-3
32-3
64
30-2
32-2
30-1
32-1
32-5
30-5
30-6
32-6
TPKD
T38
VIII

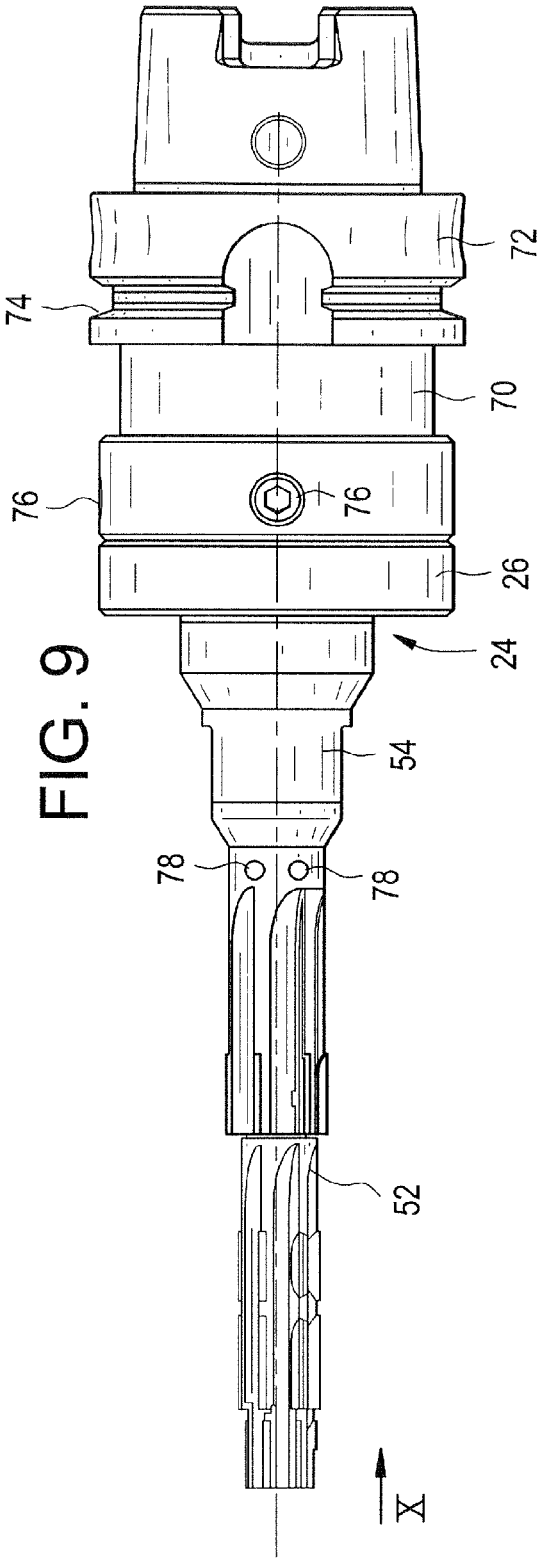

FIG. 9

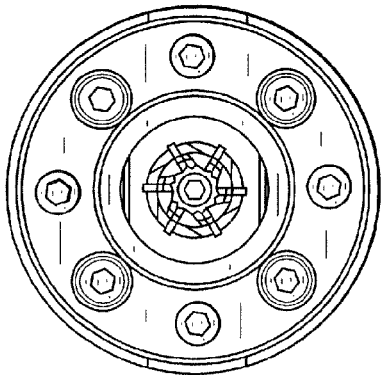

FIG. 10

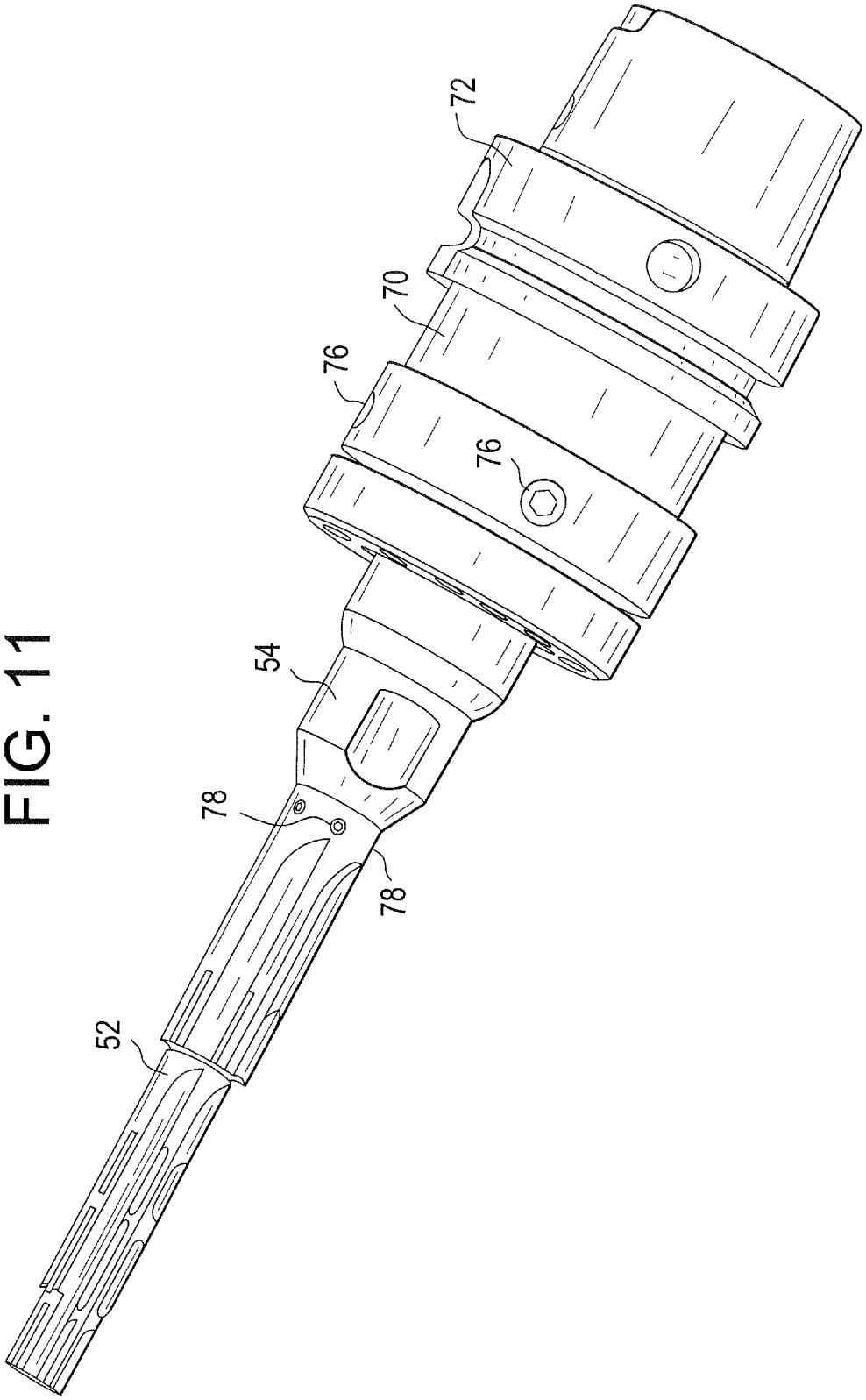

FIG. 11

MULTI-BLADE CUTTING AND DRILLING FINISHING TOOL

The invention relates to a multi-blade cutting and drilling finishing tool or fine machining tool according to the introductory clause of claim **1**.

Such tools are often designed as so-called stepped reamers, and can successfully be used to generate very accurately axially staggered bores of varying diameter with a single working stroke, which are additionally recessed relatively deeply in a work piece.

Accordingly, the most stringent of requirements are placed on such a tool in terms of stability and machining accuracy. One special difficulty in designing such high-performance reamers is here that the dimensional stability of the tool and machining accuracy of the blades must also be present even given significant working depths. For example, when manufacturing bores for accommodating hydraulic piston slide valves, e.g., which are required in control blocks of motor vehicle controllers, it is necessary to bridge a gap of more than 150 mm extending from the fixing point of the tool to the foremost blade set, wherein the smallest nominal, diameter of the bore to be machined only measures about 11 mm, for instance. On the other hand, the bores to be fabricated with such a tool must be manufactured with a high surface quality and extremely accurate concentricity throughout, while maintaining very narrow tolerances, so that special measures are required to ensure that the stepped bores with a significant axial distance between them have very narrow diameter tolerances of only several μm and cylinder position tolerances also lying in the μm range.

In order to be able to realize the accurate alignment of the bore or stepped bores while remaining in compliance with the narrow dimensional and positional tolerances, it is common to stabilize the blades often distributed uniformly over the circumference of the tool by means of guiding strips lying in between. For example, Document DE 197 19 893 A1 describes such a tool.

However, it turns out that a reamer configured in this way is unable to fabricate deep bores or stepped bores having axially widely spaced apart machining surfaces with the high accuracy described above. Apart from that, the disadvantage to such a known structural design is that the guiding strips significantly limit flexibility when configuring the tool, since these guiding strips take up a relatively great deal of installation space in the circumferential direction.

Therefore, the object of the invention is to provide a preferably rotary driven, multi-blade cutting and drilling finishing tool, in particular a reamer, for machining deep or stepped bores, which can be used to fabricate bores that lie axially relatively deep in the work piece or are spaced wide apart, and have diameters ranging down to relatively small with the highest accuracy, dimensional stability and surface quality, while maintaining a structural design that offers the maximum possible flexibility in terms of mounting the sets of blades.

This object is achieved with a multi-blade cutting and drilling finishing tool or fine machining tool for machining deep or stepped bores, the tool comprising at least a first blade set and a guiding strip set axially behind the first blade set with respect to the axial direction of the tool in which the tool advances forward to machine deep or stepped bores, the guiding strip set comprising very accurately positioned cutting inserts, each cutting insert aligned with one of the blades of the first blade set in a direction parallel to an axis of the tool, and each cutting insert having a nominal diameter that is smaller than the nominal diameter of the first blade set by

essentially twice the lubrication gap that forms between the guiding strip set and the deep or stepped bores when using the tool.

According to the invention, use is made of a specially designed guiding strip set that is located behind the blade set in the advancing direction—or when configured as a stepped tool between two sets of blades with differing nominal diameters—and formed by cutting inserts that each are axially flush with the blades in the adjacent blade set in the advancing direction of the tool. The preferably cylindrically ground cutting inserts of the guiding strip set have a nominal diameter in the 1/1000 range that is smaller than the nominal diameter of the adjacent blade set in the advancing direction. This difference in nominal diameter measures on the order of twice the lubrication gap formed while using the tool relative to the bore wall just machined, for example ranging between about 11 and 17 μm given a tool with a nominal diameter of approx. 13 mm. Therefore, this difference in nominal diameters is essentially adjusted in such a way that it can be filled by a lubrication film of used coolant/lubricant, so that the guiding strip set can be effectively used to stabilize the work piece.

Because highly accurately placed blade sets of the guide strip set are axially flush with the blades in the adjacent blade set in the advancing direction of the tool, but axially offset relative to these blades, advantageous use is made of the axial installation space that is present anyway between the blade set and tool shank or—when configured as a stepped tool between the sets of blades—the reamer. This permits an increase in the number of blades in the area of the at least one blade set, which further enhances flexibility when configuring the tool to reflect the respective cutting problem at issue.

In particular when the at least one blade set is fitted with an even number of blades, and these blades are arranged essentially uniformly over the circumference, the resultant special advantage is that a respective blade set of the guiding strip set lies essentially diametrically opposite a blade in the adjacent blade set in the advancing direction, making it possible to guide the sets of blades in an especially efficient way. The cutting inserts of the guiding strip set are extremely space-saving, and can essentially be constructed like the blades of the actual sets of blades of the tool. This additionally simplifies the manufacture of the tool.

Advantageous further developments are the subject of the subclaims

It has been found that setting the nominal diameter of the guiding strip set to values according to claim **2** yields especially good results when supplying coolants/lubricants with conventional parameters (consistency, density, speed, pressure). The difference between the nominal diameter for the guide strip set on the one hand and adjacent blade set in the advancing direction on the other can vary depending on whether wet or dry machining (MS technology) is selected, and as a function of the pressure of the used coolant/lubricant. For example, at a nominal diameter for the blade set of 13 mm, the nominal diameter difference can measure between 11 and 17 μm.

To achieve an especially good stabilizing effect of the guiding strip set, i.e., to ensure an especially good guiding function, it is advantageous that the axial length of the blade sets of the guiding strip set not be allowed to become too short. However, it has been found that the axial length can readily be limited to the length of the adjacent blade set.

The configuration of the fine machining tool according to the invention even makes it possible to give the tool a modular structural design without sacrificing any of the machining accuracy of the tool. This further elevates the flexibility with regard to the tool configuration.

The further development described in claim **5** yields an especially advantageous structural design for the tool. This structural design makes it possible to construct a tool for a wide variety of applications with minimal retrofitting outlay. Since the first tool module is detachably joined with the other tool module, the guiding strip set must perform an especially important function, since it is able to compensate for the weakening of the tool that naturally arises from coupling the modules in an especially effective manner.

It has even been found that the structural design according to the invention or the configuration and arrangement of the guiding strip set according to the invention makes it possible to furnish the forerunning tool section of the tool with at least one additional blade set, which can also be stabilized by the guiding strip set. In particular when this additional blade set is situated on a replaceable module, this significantly enhances even further the flexibility in configuring the tool.

The cutting inserts of the guiding strip set and/or at least one of the present cutting inserts are advantageously comprised of tool tips having a PCD (polycrystalline diamond) plating. Such tool tips fitted with PCD can be given an extremely dimensionally accurate design, and take up relatively little installation space, in particular when directly soldered with the substrate. In has surprisingly been discovered that these PCD fitted tool tips are also functionally eminently suitable in the vicinity of the guiding strip set, even if they only exhibit a thickness in the mm range, so that the stabilizing functions described above are reliably sustained.

Tool production is further simplified if the cutting inserts of the guiding strip set and/or at least one of the present blade sets are aligned axially parallel. However, let it be emphasized at this juncture that the tool basically need not have straight grooves. Rather, it can also be equipped with blades that are at least slightly tilted in or against the rotational direction of the tool.

Tool performance can be specially optimized by means of an internal coolant/lubricant supply. This type of internal coolant/lubricant supply ensures that not just the blade sets, but also the guiding strip set is continuously supplied with enough coolant/lubricant, so that the stabilizing function of the guiding strip set can be reliably sustained. Such an internal coolant/lubricant supply is especially advantageous for dry machining, i.e., when using MQL (minimum quantity lubrication) technology.

A sufficient number of openings is advantageously allocated to each blade set. At least one opening of the coolant/lubricant supply can even be allocated to each blade in the blade set. Since the guiding strip set usually closely adjoins the adjacent blade set in the advancing direction of the tool, it is even enough to supply axially flush cutting inserts of the blade set and adjacent guiding strip set with coolant/lubricant via a shared opening.

The further development of claim **14** yields an especially dimensionally stable coupling of the tool with a tool holding fixture of a tool system, since the chucking flange stabilizes the axial alignment of the tool in addition to the centering extension or hollow shank taper (HST).

Exemplary embodiments of the invention will, be explained in greater detail below based on schematic drawings. Shown on:

FIG. **1** is a slightly magnified side view of an embodiment of the multi-blade drilling finishing tool;

FIG. **2** is the view according to "II" on FIG. **1**;

FIG. **3** is a detail of the blade sets of the tool according to FIG. **1** in a somewhat magnified view;

FIG. **4** is a perspective view of the to according to FIGS. **1** to **3**;

FIG. **5** is a detail of the tool according to FIG. **4** in a somewhat magnified view;

FIG. **6** is a somewhat magnified side view of a tool module used in the tool according to FIG. **1**;

FIG. **7** is a magnified view according to "VII" on FIG. **6**;

FIG. **8** is the sectional view according to "VIII-VIII" on FIG. **7**;

FIG. **9** is the side view of another embodiment of the tool;

FIG. **10** is the view according to "X" on FIG. **9**, and

FIG. **11** is a perspective view of the tool according to FIG. **9**.

A multi-blade cutting and rotationally driven drilling finishing tool configured as a stepped reamer is labeled with reference number **20** on FIG. **1**. This tool is used for accurately machining stepped bores, for example those required in control block casings of hydraulic controllers in automotive technology for accommodating piston slide valves. The distinctive feature of these bores lies in the fact that they are axially spaced relatively far apart, and exhibit exceedingly narrow positional tolerances. As a result, the tool must be introduced relatively deeply into the work piece, and still be able to produce bores with the highest surface quality and dimensional stability.

The tool **20** has a shank **22** and clamping section **24**, which in the exemplary embodiment shown exhibits a clamping flange **26** and centering extension **28**. For example, the stepped reamer according to FIG. **1** has a length of approx. 160 mm and a shank diameter on the order of about 16 mm. In the exemplary embodiment depicted, the reamer is fitted with three sets of blades **30**, **32** and **34**, wherein the first blade set **30** has a nominal diameter D**30**, the second blade set **32** a somewhat larger nominal diameter D**32**, and the third blade set **34** and even larger nominal diameter D**34**. For example, D**30** measures about 11 mm, D**32** about 13 mm, and D**34** about 17 mm. All nominal diameters have exceedingly narrow tolerances, for example between 0 and −0.003 mm. For example, the axial distance between the first blade set **30** and third blade set **34** measures about 60 mm, while the distance between the second blade set **32** and third blade set **34** measures about 30 mm.

In order that the stepped bores to be fabricated with the tool can be manufactured with the highest level of accuracy and surface quality, a supporting strip set **36** is situated between the second blade set **32** and third blade set **34**, and has a nominal diameter D**36** measuring slightly less than the nominal diameter D**32** of the second blade set **32**. At a nominal diameter of the second blade set D**32** of about 13 mm, the nominal diameter D**36** of the guiding strip set **36** is 14±3 μm smaller than the nominal diameter D**32** of the adjacent blade set **32** in the advancing direction of the tool.

The supporting strip set is comprised of cutting inserts **36-1**, **36-2** to **36-*n***, wherein n represents the number of blades in blade sets **30**, **32** and **34** distributed uniformly over the circumference. The cutting inserts **36-1** to **36-*n*** are preferably cylindrically ground, wherein a round phase is preferably partially ground on the leading edge.

Let it be emphasized at this juncture already that the cylindrical ground surface is not absolutely necessary. It is equally possible to partially grind the cutting inserts **36-1** to **36-*n*** similarly to cutting, or in such a way as to yield a negative secondary cutting edge with a clearance angle. However, it is critical that the cutting inserts **36-1** to **36-*n*** and machining or molding process be so accurate as to result in a homogeneous lubrication gap over the entire length L**36** (see FIG. **3**), over which the tool can additionally and effectively be guided.

Given a tool configured according to FIGS. **1** to **5**, the blade sets **30**, **32** and **34** are each fitted with six blades, each

arranged at an angular distance of 60° relative to each other. Since the cutting inserts **36-1** to **36-6** are aligned with one of the blades of blade sets **30**, **32** and **34** in a direction parallel to an axis of the tool, a stabilizing lubrication gap of the supporting strip set **36** lies diametrically opposite and slightly axially offset relative to each blade of the blade sets, in particular of blade set **32**, so that evasive movements of the tool induced by cutting forces can be effectively counteracted.

In the exemplary embodiment shown, the blade sets **30**, **32** and **34** are also fitted with cutting inserts, which exhibit a structural design similar to that of the cutting inserts **36-1** to **36-*n*** of the supporting strip set **36**. Specifically, these cutting inserts **30-1** to **30-*n***, **32-1** to **32-*n*** and **34-1** to **34-*n*** can have a thickness T**38** (see FIG. **7**) in the range from about 0.75-1.5 mm. The cutting inserts **30-1** to **30-*n***, **32-1** to **32-*n*** and **34-1** to **34-*n*** can be comprised of PCE (polycrystalline diamond) fitted cutting tips, in which a steel carrier which can have a thickness of about 0.5 mm, supports a PCD tool tip which can have a thickness TPKD measuring 0.5 mm.

The cutting inserts **30-1** to **30-6**, **32-1** to **32-6** and **34-1** to **34-6** are each accommodated in a pocket **40** in the tool shank **22** in such a way that the respective secondary cutting edge **42** lies in a plane that runs through the tool axis **44**. This geometric arrangement can best be discerned from FIG. **2**, which additionally reveals the clearance angle α of the blades or cutting inserts of the blade set **30**, **32** and **34**.

As evident from FIG. **3**, the cutting inserts of the blade set **30**, **32** and **34** along with the supporting strips **36-1** to **36-6** configured like cutting edges are chamfered at the axial front and rear ends. As may further be gleaned from FIG. **3**, the axial distance X between the cutting inserts of the blade set **32** and supporting strips of the supporting strip set **36** only measures a few mm, for example between 2 and 3 mm, and the length L**36** of the supporting strip set **36** lies on the order of the length L**32** of the adjacent blade set **32** in the advancing direction of the tool **20**.

In the exemplary embodiment shown, the axial length L**32** of the blade set **32** measures 16 mm, for example, while the axial length L**36** of the supporting strip set **36** essentially measures 12 mm.

The tool shank **22** carrying the blade sets **30**, **32** and **34** along with the supporting strip set **36** is made out of a tool steel. A quenched and tempered steel, such as 50CrV4, is used as the material for the substrate of the cutting inserts **30-1** to **30-6**, **32-1** to **32-6**, **34-1** to **34-6**, as well as for supporting strips **36-1** to **36-6**.

The tool **20** has a coolant/lubricant supply, in which supply specifically takes place by way of internal coolant/lubricant channels. Reference number **46** denotes openings in branch channels, which run inclined to the axis **44** of the tool **20** proceeding from a centric internal bore of the tool, and empty into the pockets **40** of the tool shank **22** in proximity to the cutting inserts. By suitably selecting the openings **46** allocated to the blade set **32**, the coolant/lubricant exiting these openings can be used to generate an effective lubricant film in the region of the supporting strip set **36**.

As may further be gleaned from FIGS. **1** to **3**, all nominal diameters of the blade sets on the one hand along with the supporting strip set **36** on the other are machined in such a way as to comply with a running accuracy relative to a face **48** of the clamping flange **26** within a tolerance of 0.003 mm. The same holds true for the running accuracy of this nominal diameter in relation to a cylindrical surface **50** of the clamping flange **26**.

In addition, the tool **20** depicted on FIGS. **1** to **3** is modular in design, which will be explained in greater detail below drawing reference to FIGS. **6** to **8**.

As evident, the blade sets **30** and **32** along with the supporting strip set **36** are formed on a first tool module **52**, which is centered and axially coupled in a rotatably fixed manner with a second tool module **54**. The first tool module **52** carrying the blade sets **30** and **32** as well as the supporting strip set **36** is shown on FIG. **6**, and has a shank extension **56** bonded with the second tool module **54** by way of a threaded section **58**. The two tool modules **52** and **54** are centered relative to each other via two pairs of fitting surfaces. On the one hand, a cylindrical section **60** acts in conjunction with a complementary, preferably ground internal recess in the second tool module **54**. On the other hand, a cone section **62** is used for purposes of centered clamping. The first tool module **52** has a central bore (not shown in any greater detail) for the coolant/lubricant supply of the blade sets **30**, **32** and **34** as well as the supporting strip set **36**.

FIGS. **8** and **9** illustrate a distinctive feature of the first tool module **52**. The top view according to FIG. **7** depicts an expanding screw **64** that is frontally screwable into the tool module **52**, which can be screwed into a female thread on the tool module **52**, and abuts a conical counter-fitting surface **68** with an outer cone in the process. This makes it possible to introduce fine radial adjustments in the blades **30-1** to **30-6**.

Finally, it can be gleaned from the view according to FIG. **7** that the cutting inserts **30-1** to **30-*n*** of the first blade set **30** are precisely flush with the cutting inserts **32-1** to **32-*n***, and than they are circumferentially spaced uniformly apart from each other.

FIGS. **9** to **11** present a completely multi-blade cutting and drilling finishing tool configured as a stepped reamer, wherein the tool modules **52** and **54** are coupled via the clamping section **24** with clamping flange **26** to two additional modules **70** and **74**. The module **70** represents a compensating adapter, while the module **72** represents a so-called (HST) hollow shank taper adapter, which can be used to couple the tool **20** to a tool holder of a machine spindle. Reference number **74** denotes a gripper groove for engaging a tool changing system.

Reference number **76** denotes threaded pins with which the tool can be balanced. Reference number **78** denotes additional threaded pins on the second tool module **54**, with which the tool can be precision balanced.

Of course, deviations from the described exemplary embodiments are possible without, departing from the underlying idea of the invention. For example, the essentially axial alignment between the blades of blade set **32** and supporting strip set **36** can be sustained even if the blades are configured with a slight left or right-handed twist, i.e., if the cutting angle of the secondary cutting edge preferably deviates slightly from 0°. Instead of the tool having a straight groove, the grooves are then positively or negatively slightly inclined relative to the axis.

The blade sets **30**, **32** and **34** are also not necessarily configured in such a way as to form the blades on cutting inserts. The blades can also be designed as a single piece with a blade carrier, which then preferably consists of a hard material, e.g., solid carbide.

Other materials can also be used as the material for the first tool module **52** and/or the second tool module **54**, including in particular varying materials as well.

The supporting strips of the supporting strip set **36** are cylindrically ground in the described exemplary embodiments. This ground surface can also be modified in such a way as to yield an expansion of the lubrication gap in the rotational direction of the tool.

The ground surface of the cutting inserts in the blade sets **30**, **32** and **34** was not described in detail. Use can here be

made of conventional ground surfaces, which as a rule are utilized in high-performance reamers, and need not be extensively described here. However, it may be advantageous, for example, to slightly taper the diameter of the PCD-plated cutting inserts lengthwise in an axial direction, specifically within the $1/1000^{th}$ range, e.g., by up to 12 to 16 μm. It is also advantageous to round the PCD-plated cutting inserts on the edges or provide them with a round chamfer.

Instead of allocating each blade of the blade sets **30**, **32**, **34** and **36** with its own coolant/lubricant supply opening, it may in some instances also be enough to supply several blades via a single opening.

The previously outlined drilling finishing tool configured as a stepped reamer was described above as a rotationally driven tool. However, it is likewise possible to have the tool stand in place, and perform the machining operation by rotating the work piece.

The tool described above has six blades distributed uniformly over the circumference. However, the number of blades can be varied within broad limits, although an even number of blades is advantageously selected. Apart from that, the invention can also offer the advantages described above even when the angular distances of the blades distributed over the circumference are not precisely the exact same size.

Described above were embodiments of to used in a single operation for machining stepped bores. However, all of the advantages can also be realized by the invention if just a single blade set is present, and an axially offset guiding strip set configured according to the invention is allocated thereto.

As a consequence, the invention provides a multi-blade cutting and drilling finishing tool, in particular a reamer, for machining deep, in particular stepped bores. It has a blade set with a predetermined nominal diameter, and blades distributed essentially uniformly over the circumference. In order to improve the axially centered guidance of the tool, the blade set has lying behind it in the advancing direction a guiding strip set in the form of very accurately positioned and preferably cylindrically ground cutting inserts, which each are aligned with one of the blades of the blade set adjacent in a direction parallel to an axis of the tool, and which each have a nominal diameter that is smaller than the nominal diameter of the blade set by essentially twice the lubrication gap that forms when using the tool.

The invention claimed is:

1. A multi-blade cutting and drilling finishing tool or fine machining tool for machining deep or stepped bores, the tool comprising:

a first blade set having a first nominal diameter and blades distributed essentially uniformly over the circumference;

a guiding strip set axially behind the first blade set with respect to the axial direction of the tool in which the tool advances forward to machine deep or stepped bores, the guiding strip set comprising very accurately positioned supporting inserts, each supporting insert aligned with one of the blades of the first blade set in a direction parallel to an axis of the tool, the guiding strip set having a second nominal diameter that is smaller than the first nominal diameter by essentially twice the lubrication gap that forms between the guiding strip set and the deep or stepped bores when using the tool; and

a second blade set behind the guiding strip set in the advancing direction, the second blade set having a third nominal diameter, the third nominal diameter being larger than the first nominal diameter.

2. The drilling finishing tool according to claim **1**, wherein the nominal diameter of the guiding strip set is smaller than the nominal diameter D of the first blade set by an amount within a range of between 0.0006 and 0.0016×D.

3. The drilling finishing tool according to claim **1**, wherein the axial length of the supporting inserts of the guiding strip set is on the order of the axial length of the first blade set.

4. The drilling finishing tool according to claim **1**, wherein the tool is modular in design.

5. The drilling finishing tool according to claim **4**, wherein the guiding strip set and the first blade set are formed on a first tool module that is detachably connected with a second tool module, which has a clamping section for centered coupling to a tool holder or module of a tool system.

6. The drilling finishing tool according to claim **5**, wherein the first tool module further comprises a second blade set with a nominal diameter of the second blade set differing from the nominal diameter of the first blade set.

7. The drilling finishing tool according to claim **5**, wherein the second tool module carries a second blade set, the second blade set having a nominal diameter greater than the nominal diameter of the first blade set in the advancing direction of the tool.

8. The drilling finishing tool according to claim **1**, wherein each of the at least a first blade set has 6 blades uniformly distributed over the circumference.

9. The drilling finishing tool according to claim **1**, wherein the supporting inserts of the guiding strip set and/or at least one of the at least a first blade set are comprised of polycrystalline diamond fitted cutting tips.

10. The drilling finishing tool according to claim **9**, wherein the supporting inserts have a thickness ranging between 0.75 and 1.5 mm, and a thickness of the polycrystalline diamond cutting tip measures about 0.5 mm.

11. The drilling finishing tool according to claim **1**, wherein the supporting inserts of the guiding strip set and/or the blades of at least one of the at least a first blade set are aligned in a direction parallel to an axis of the tool.

12. The drilling finishing tool according to claim **1**, wherein the tool further comprises an internal coolant/lubricant supply.

13. The drilling finishing tool according to claim **12**, wherein at least one opening of the coolant/lubricant supply is allocated to the blades of at least one of the at least a first blade set.

14. The drilling finishing tool according to claim **5**, wherein the clamping section exhibits a centering extension or hollow shank taper and a clamping flange resting perpendicularly on the centering axis for centered coupling to a tool holder of a tool system or tool system module.

15. The drilling finishing tool according to claim **1**, wherein a secondary cutting edge clearance angle of the supporting inserts of the guiding strip set measures about 0°.

16. The drilling finishing tool according to claim **1**, wherein the axial distance between the guiding strip set and the first blade set in the advancing direction lies between 0.1 and 0.3×D wherein D denotes the nominal diameter of the first blade set.

17. The drilling finishing tool according to claim **1**, wherein the supporting inserts are cylindrically ground.

18. The drilling finishing tool according to claim **1**, wherein the nominal diameter of the guiding strip set is smaller than the nominal diameter D of the first blade set by an amount within a range of between 0.008 and 0.0014×D.

19. The drilling finishing tool according to claim **1**, wherein the axial distance between the guiding strip set and

the first blade set in the advancing direction lies between 0.15 and 0.25×D, wherein D denotes the nominal diameter of the blade set.

* * * * *