US009112360B2

(12) **United States Patent**
Goto et al.

(10) **Patent No.: US 9,112,360 B2**
(45) **Date of Patent: Aug. 18, 2015**

(54) **POWER SUPPLY DEVICE**

(75) Inventors: **Masahiko Goto**, Anjo (JP); **Masaaki Fukumoto**, Anjo (JP); **Kazuyuki Sakakibara**, Anjo (JP)

(73) Assignee: **MAKITA CORPORATION**, Anjo-Shi (JP)

(*) Notice: Subject to any disclaimer, the term of this patent is extended or adjusted under 35 U.S.C. 154(b) by 0 days.

(21) Appl. No.: **13/503,532**

(22) PCT Filed: **Sep. 2, 2010**

(86) PCT No.: **PCT/JP2010/064999**
§ 371 (c)(1),
(2), (4) Date: **Apr. 23, 2012**

(87) PCT Pub. No.: **WO2011/052294**
PCT Pub. Date: **May 5, 2011**

(65) **Prior Publication Data**

US 2012/0205984 A1 Aug. 16, 2012

(30) **Foreign Application Priority Data**

Oct. 30, 2009 (JP) 2009-250263

(51) **Int. Cl.**
H02J 7/00 (2006.01)

(52) **U.S. Cl.**
CPC ***H02J 7/0024*** (2013.01); ***H02J 7/0063*** (2013.01); *Y10T 307/685* (2015.04)

(58) **Field of Classification Search**
CPC H02J 7/0024
USPC 320/117
See application file for complete search history.

(56) **References Cited**

U.S. PATENT DOCUMENTS

5,712,553	A *	1/1998	Hallberg	307/75
6,351,097	B1 *	2/2002	Oh	320/107
7,893,562	B2 *	2/2011	Oga	307/71
2001/0054877	A1 *	12/2001	Kinoshita	320/112
2003/0071523	A1 *	4/2003	Silverman	307/150

(Continued)

FOREIGN PATENT DOCUMENTS

CN	2826797 U	10/2006
CN	101297458	10/2008

(Continued)

OTHER PUBLICATIONS

Nov. 2, 2010 Written Opinion issued in International Patent Application No. PCT/JP2010/064999 (with translation).

(Continued)

Primary Examiner — Edward Tso
Assistant Examiner — Johali Torres Ruiz
(74) *Attorney, Agent, or Firm* — Oliff PLC

(57) **ABSTRACT**

A power supply device includes battery interfaces configured to removably receive at least three batteries and a connection circuit configured to electrically connect the at least three batteries to each other. The connection circuit is capable of connecting at least two batteries in parallel and connecting at least one other battery to the at least two parallel-connected batteries in series. According to this power supply device, it is possible to supply high power to an electric device by connecting the batteries in series. In addition, it is possible to supply almost all of the electric power stored in the batteries to the electric device, even if amount of the remaining electric power in each battery is substantially uneven.

11 Claims, 13 Drawing Sheets

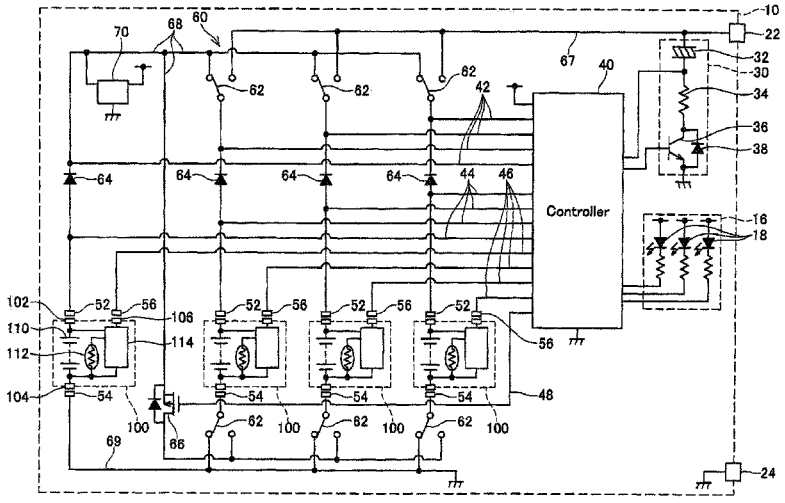

(56) **References Cited**

U.S. PATENT DOCUMENTS

2004/0049243	A1	3/2004	Seligman	
2005/0023054	A1	2/2005	Weidenheimer et al.	
2006/0092583	A1*	5/2006	Alahmad et al.	361/15
2009/0134851	A1	5/2009	Takeda et al.	
2009/0237012	A1	9/2009	Yokoyama et al.	
2011/0001456	A1*	1/2011	Wang	320/117

FOREIGN PATENT DOCUMENTS

JP	A-8-256404	10/1996
JP	A-2000-308268	11/2000
JP	A-2007-229827	9/2007
JP	A-2008-67500	3/2008
JP	A-2010-172062	8/2010
WO	WO 2007/046138 A1	4/2007

OTHER PUBLICATIONS

International Search Report issued in International Patent Application No. PCT/JP2010/064999 dated Nov. 2, 2010.
Oct. 15, 2013 Office Action issued in Japanese Application No. 2009-250263 (w/ English Translation).
Feb. 14, 2014 Office Action issued in Chinese Patent Application No. 2010800488068 (w/partial English Translation).
Apr. 4, 2014 Extended European Search Report issued in European Patent Application No. EP 10 82 6429.2.
Aug. 11, 2014 Russian Office Action issued in Russian Patent Application No. 2012122213 (with Translation).

* cited by examiner

FIG. 1

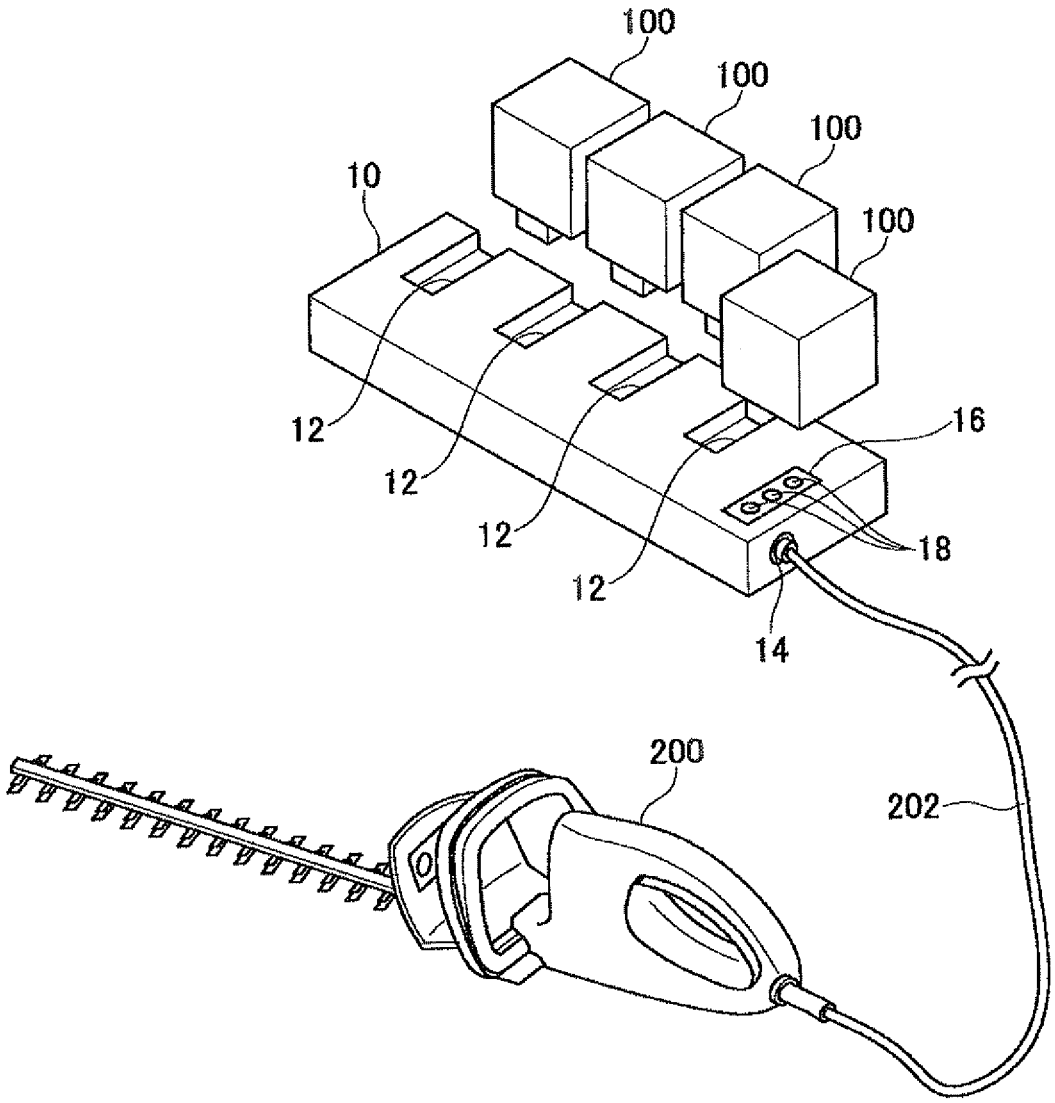

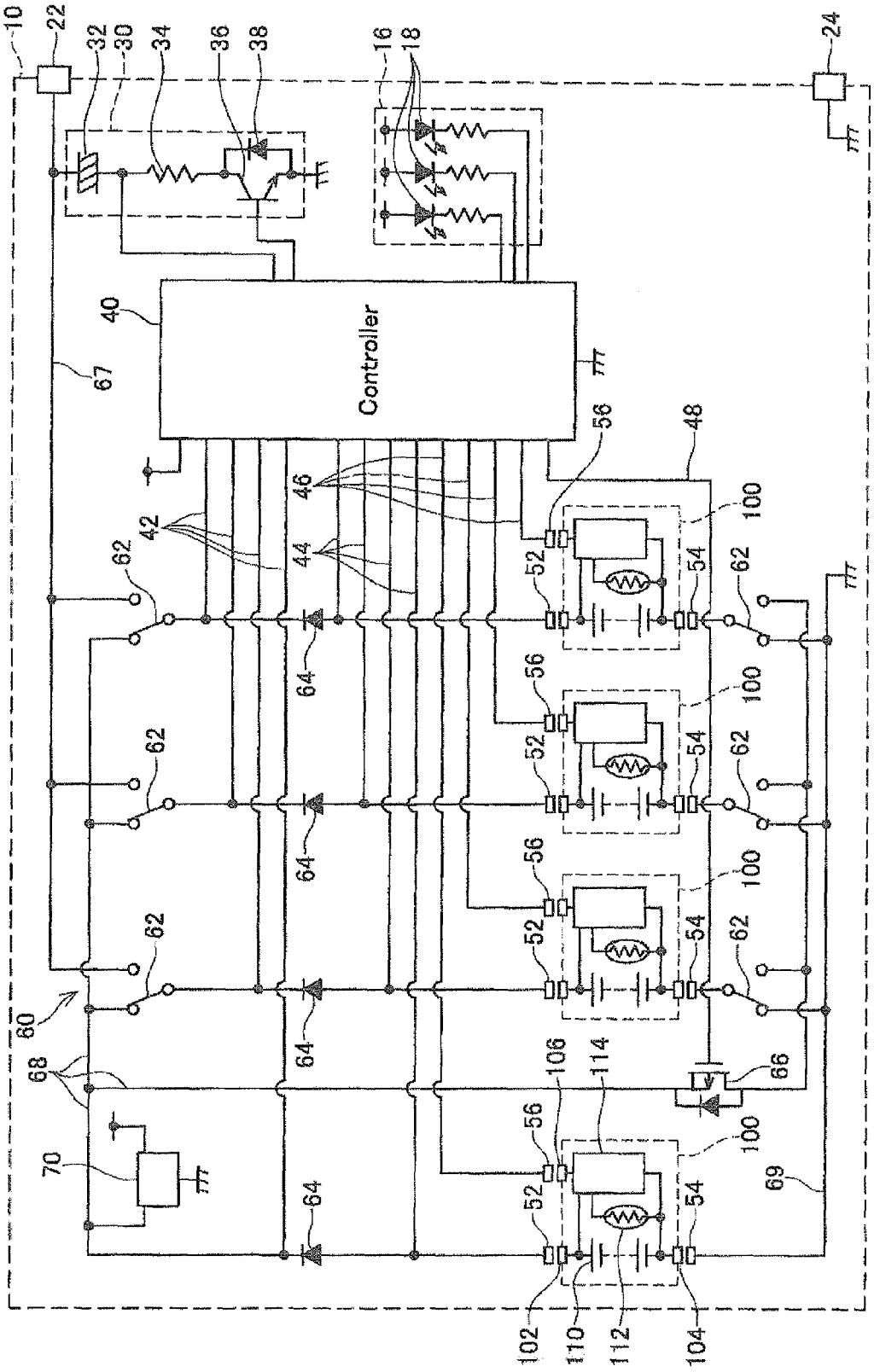
Controller
10
22
32
30
34
36
38
16
18
24
40
67
56
48
46
42
44
100
52
54
62
64
60
68
70
66
106
114
69
102
110
112
104

FIG. 2

FIG. 3A

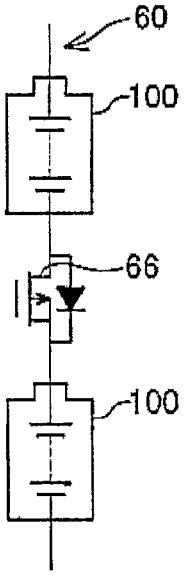

FIG. 3B

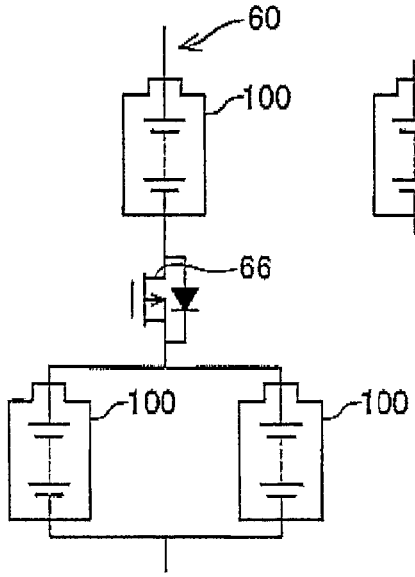

FIG. 3C

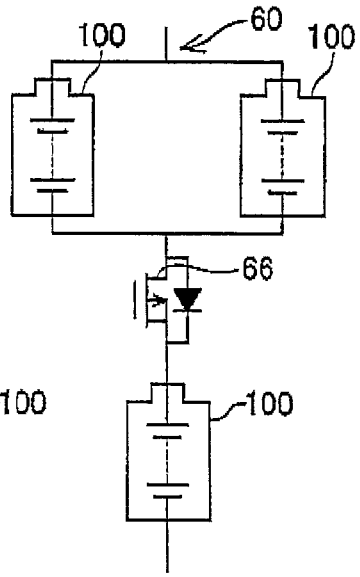

FIG. 3D

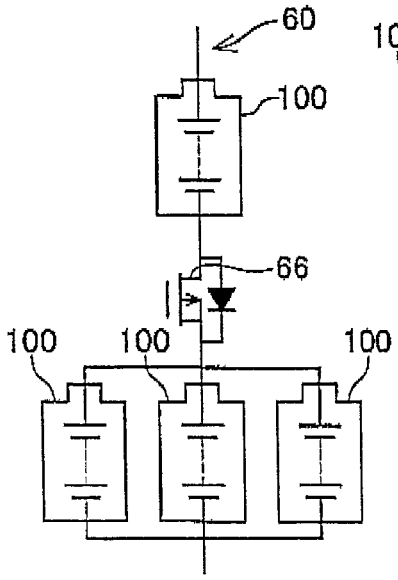

FIG. 3E

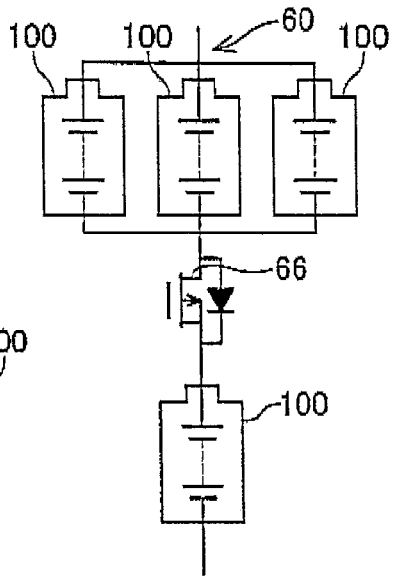

FIG. 3F

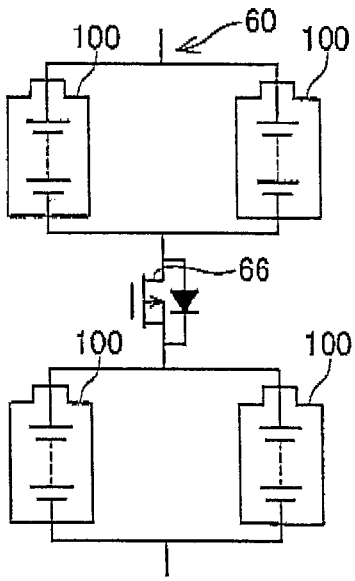

FIG. 4A

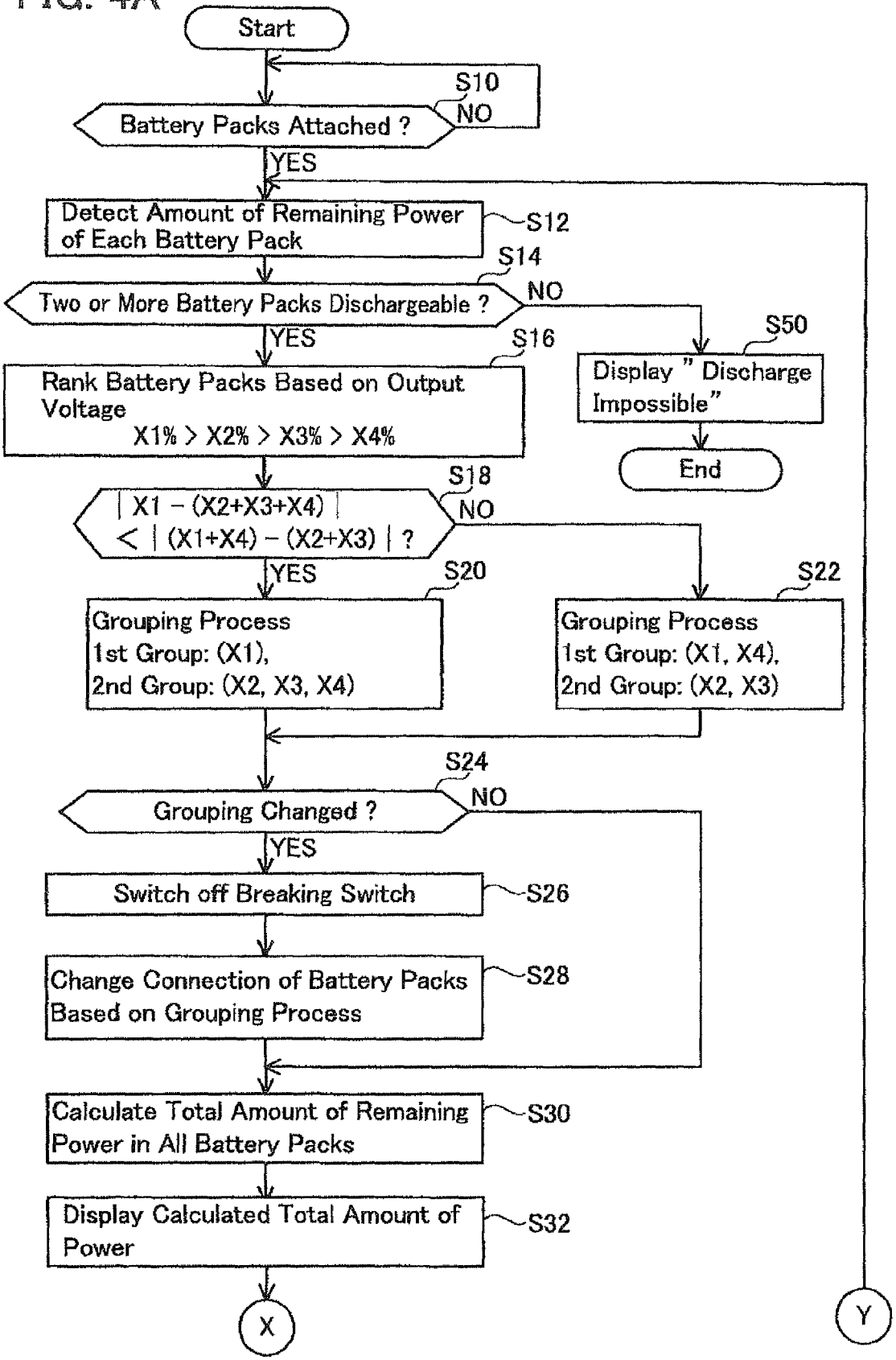
Start
S10
Battery Packs Attached ?
NO
YES
Detect Amount of Remaining Power of Each Battery Pack
S12
S14
Two or More Battery Packs Dischargeable ?
NO
YES
S16
Rank Battery Packs Based on Output Voltage
X1% > X2% > X3% > X4%
S50
Display " Discharge Impossible"
End
S18
| X1 − (X2+X3+X4) | < | (X1+X4) − (X2+X3) | ?
NO
YES
S20
Grouping Process
1st Group: (X1),
2nd Group: (X2, X3, X4)
S22
Grouping Process
1st Group: (X1, X4),
2nd Group: (X2, X3)
S24
Grouping Changed ?
NO
YES
Switch off Breaking Switch
S26
Change Connection of Battery Packs Based on Grouping Process
S28
Calculate Total Amount of Remaining Power in All Battery Packs
S30
Display Calculated Total Amount of Power
S32
X
Y

FIG. 4B

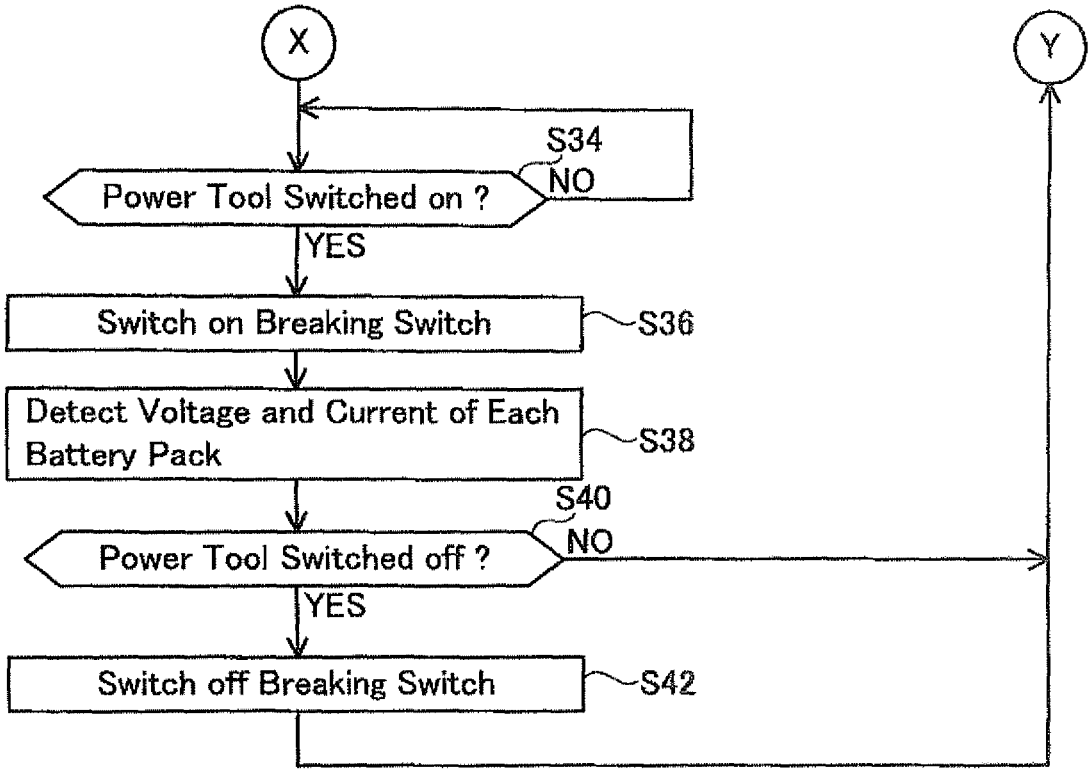
X
Y
S34
NO
Power Tool Switched on ?
YES
Switch on Breaking Switch
S36
Detect Voltage and Current of Each Battery Pack
S38
S40
NO
Power Tool Switched off ?
YES
Switch off Breaking Switch
S42

FIG. 5A

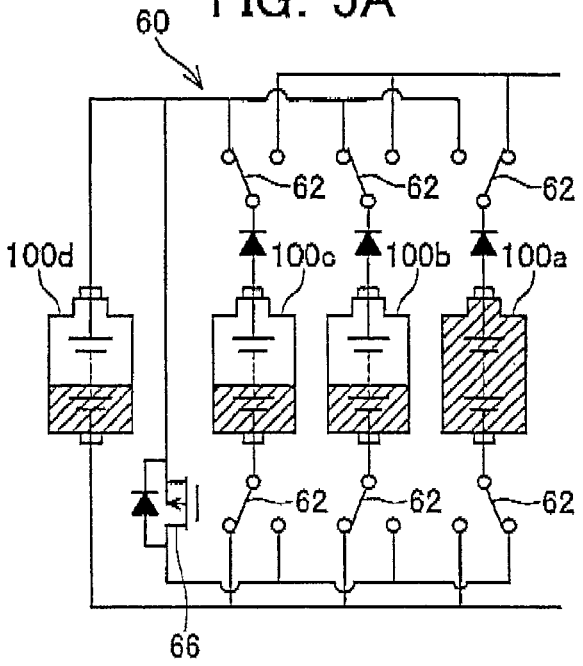

FIG. 5B

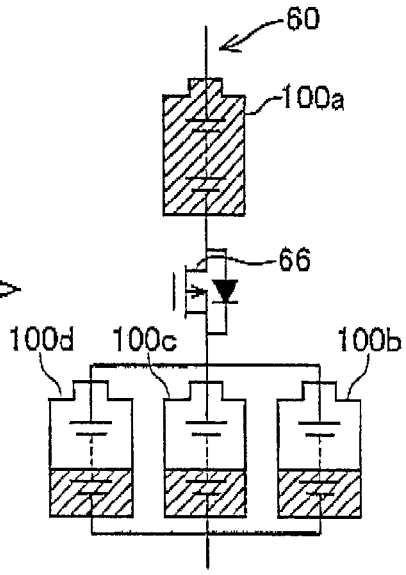

FIG. 6A

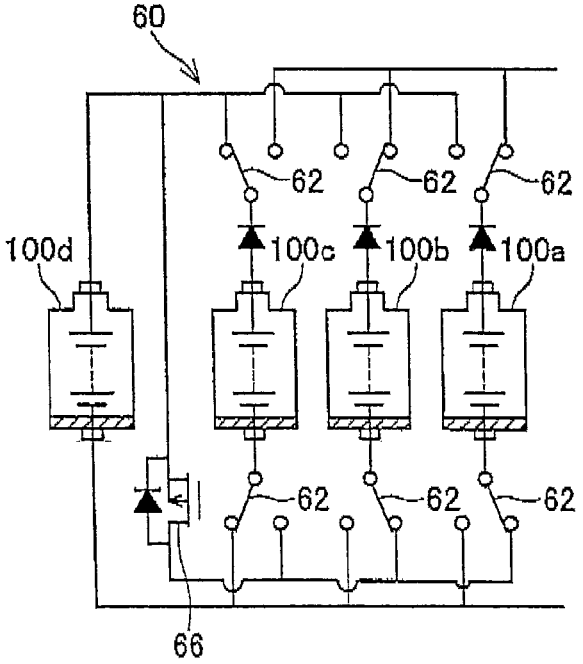

FIG. 6B

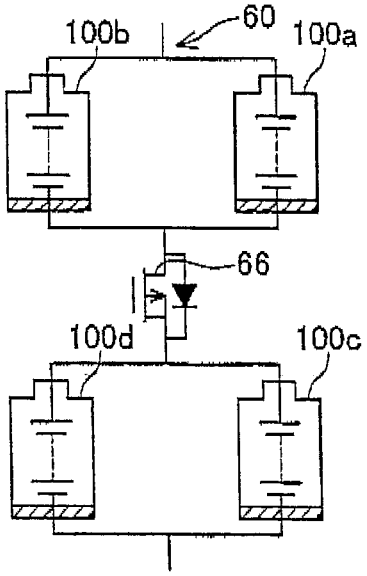

FIG. 7

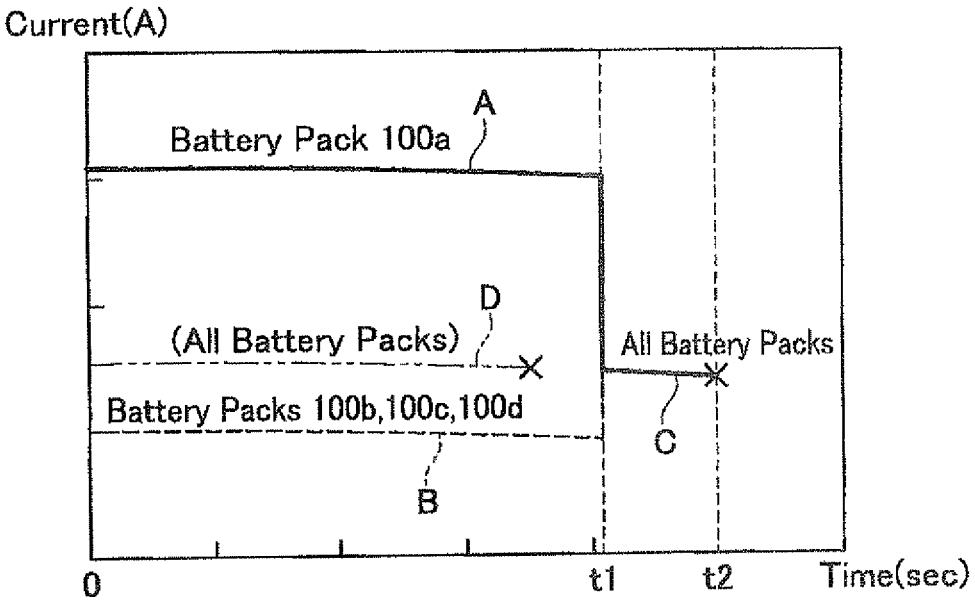
Current(A)
A
Battery Pack 100a
D
(All Battery Packs)
All Battery Packs
Battery Packs 100b,100c,100d
C
B
0
t1
t2
Time(sec)

FIG. 8A

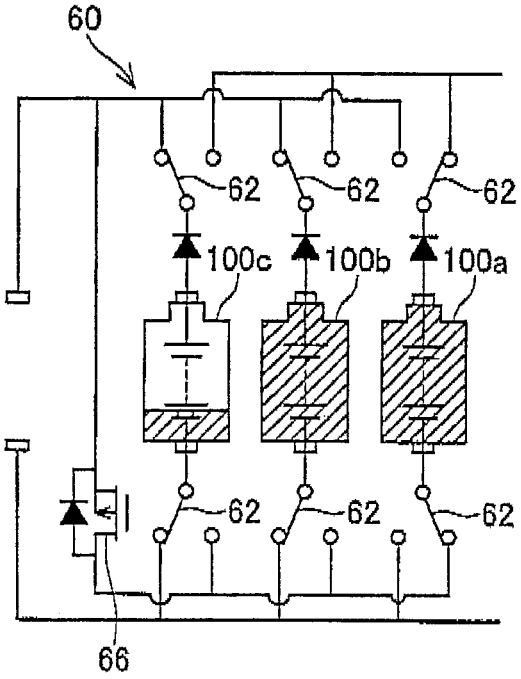

FIG. 8B

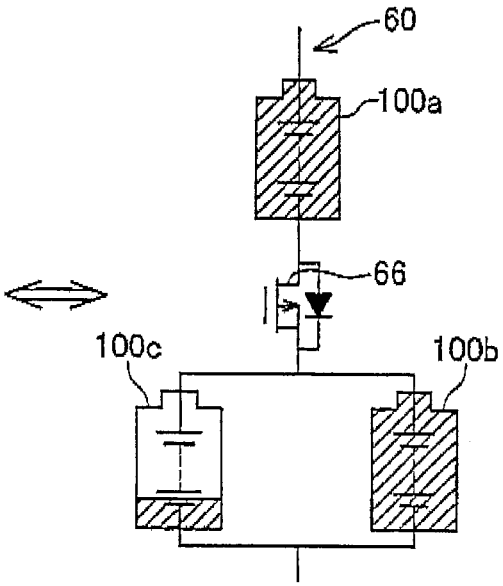

FIG. 8C

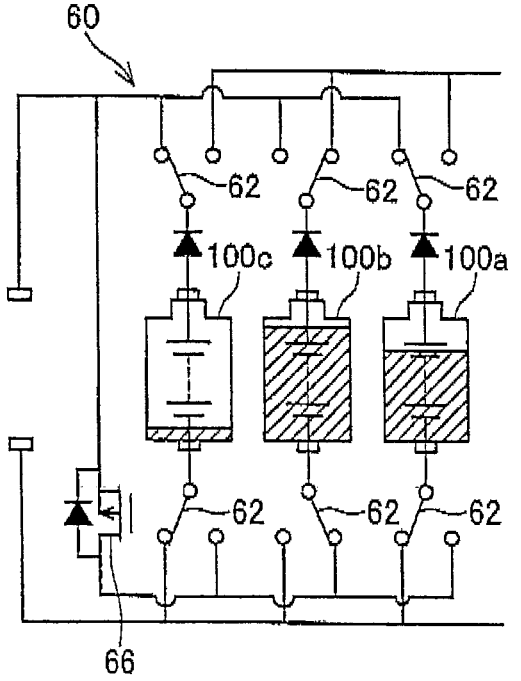

FIG. 8D

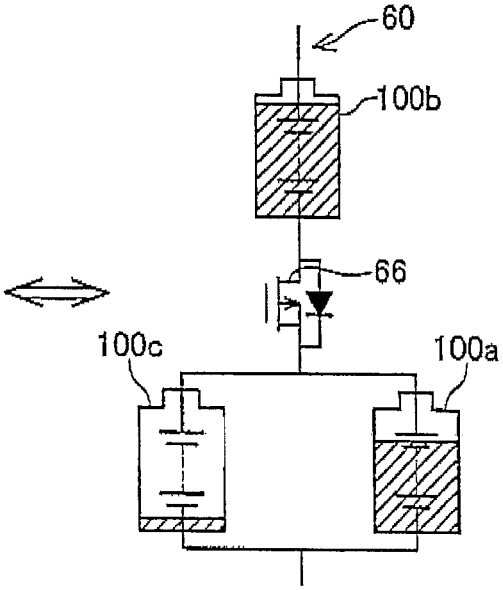

FIG. 9A

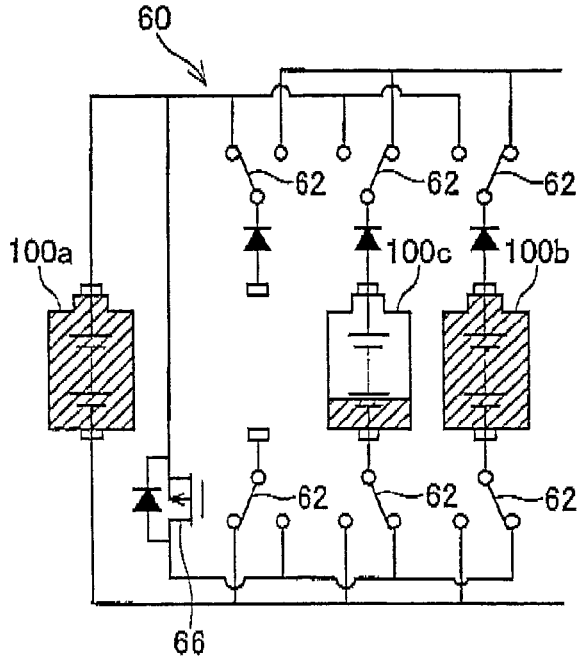

FIG. 9B

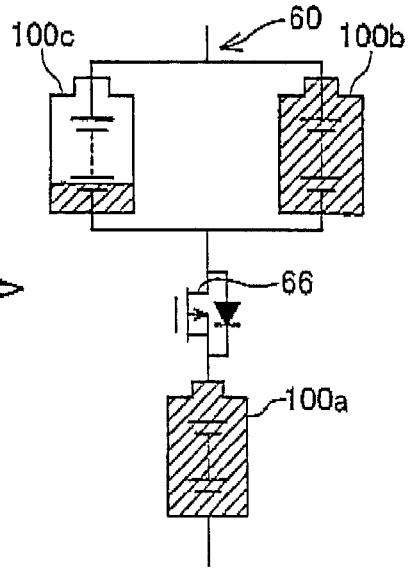

FIG. 9C

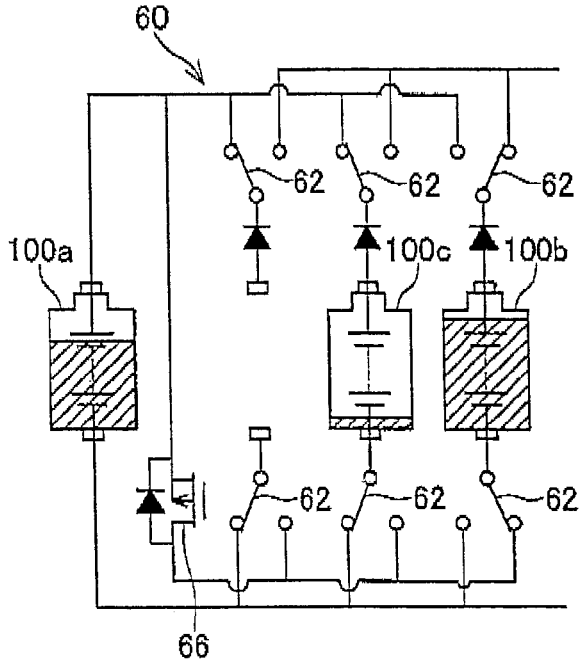

FIG. 9D

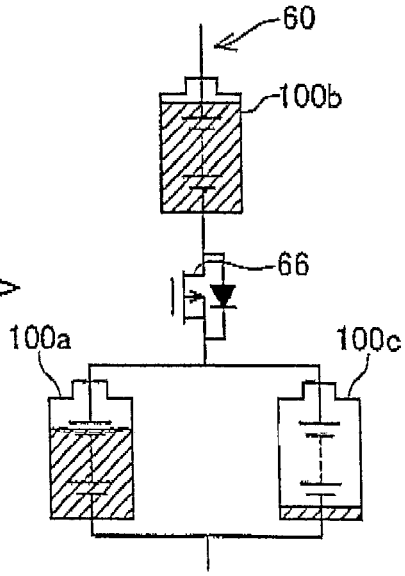

FIG. 10A

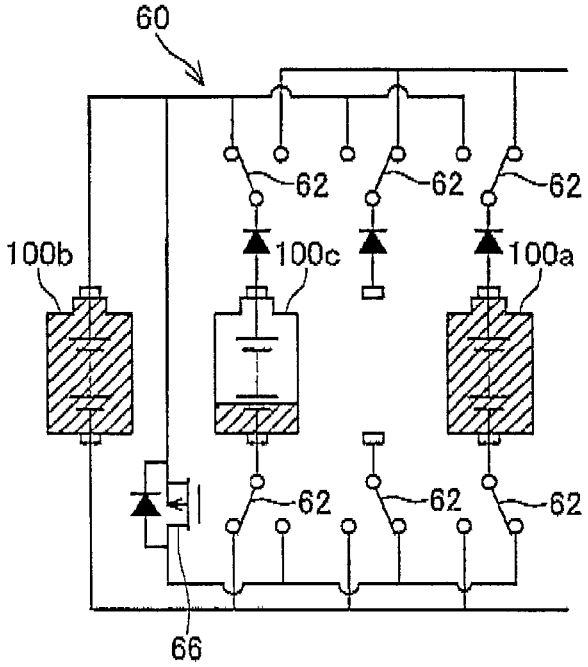

FIG. 10B

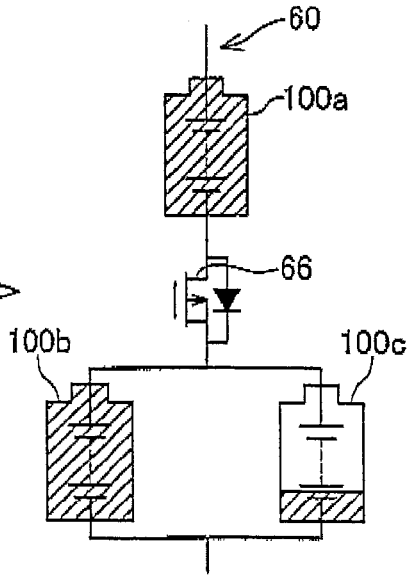

FIG. 10C

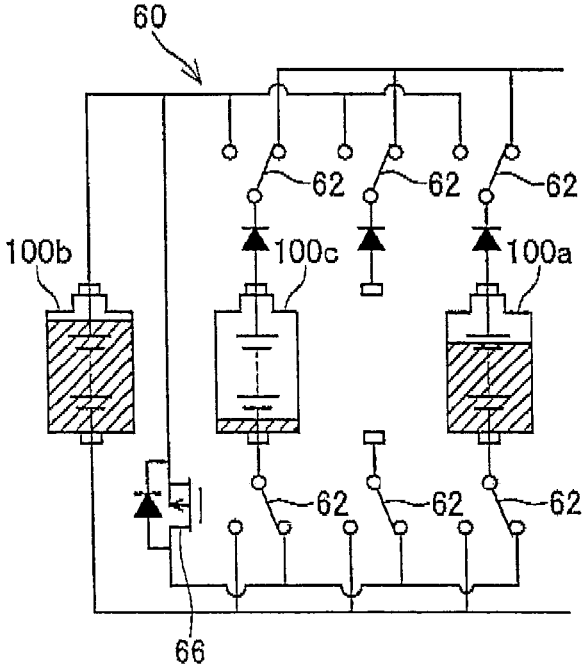

FIG. 10D

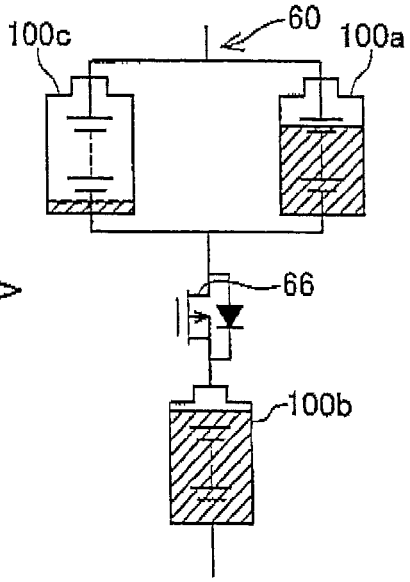

FIG. 11A

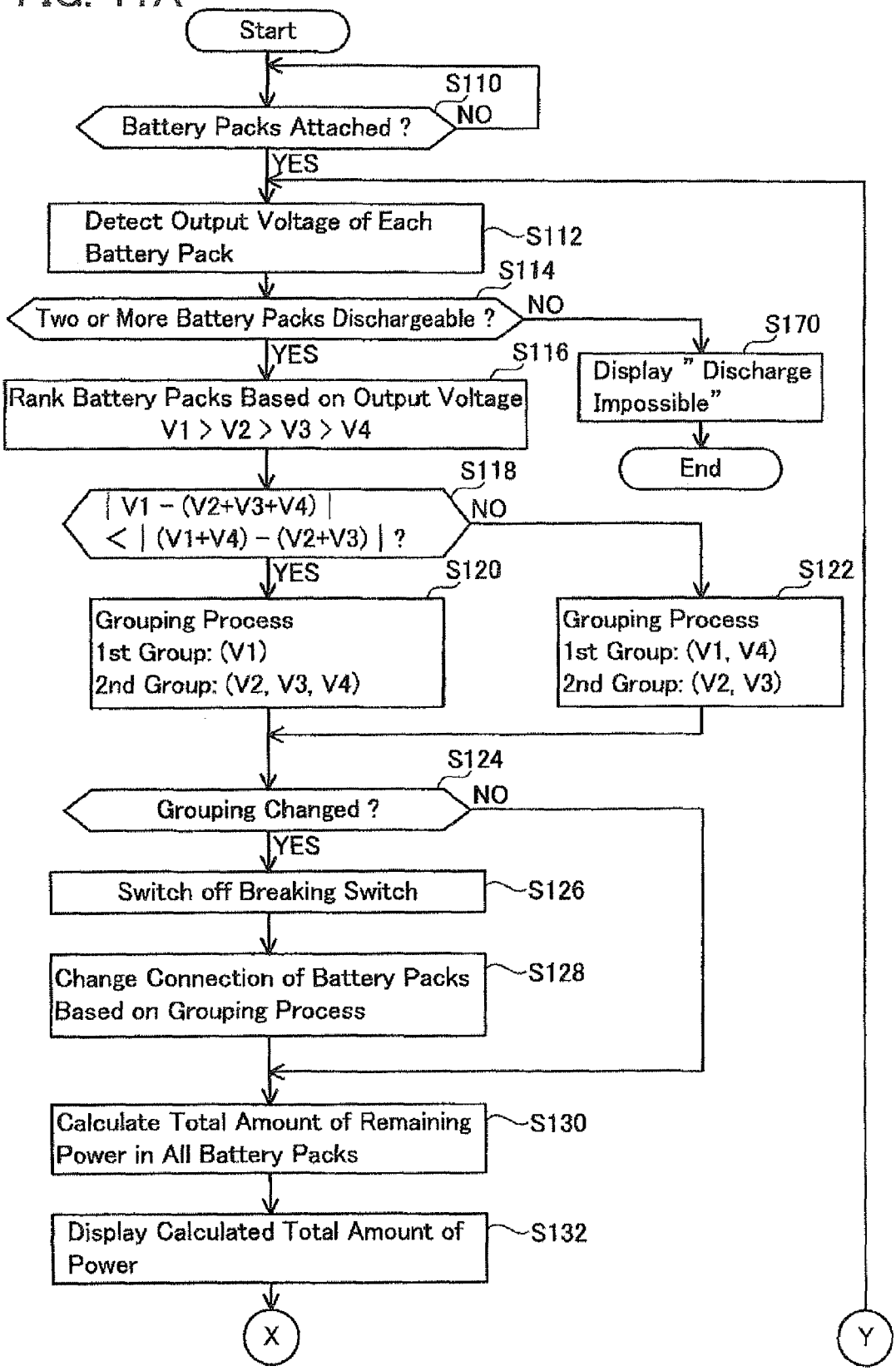
Start
S110
Battery Packs Attached ?
NO
YES
Detect Output Voltage of Each Battery Pack
S112
S114
Two or More Battery Packs Dischargeable ?
NO
S170
Display " Discharge Impossible"
End
YES
S116
Rank Battery Packs Based on Output Voltage V1 > V2 > V3 > V4
S118
| V1 − (V2+V3+V4) | < | (V1+V4) − (V2+V3) | ?
NO
YES
S120
Grouping Process 1st Group: (V1) 2nd Group: (V2, V3, V4)
S122
Grouping Process 1st Group: (V1, V4) 2nd Group: (V2, V3)
S124
Grouping Changed ?
NO
YES
Switch off Breaking Switch
S126
Change Connection of Battery Packs Based on Grouping Process
S128
Calculate Total Amount of Remaining Power in All Battery Packs
S130
Display Calculated Total Amount of Power
S132
X
Y

FIG. 11B

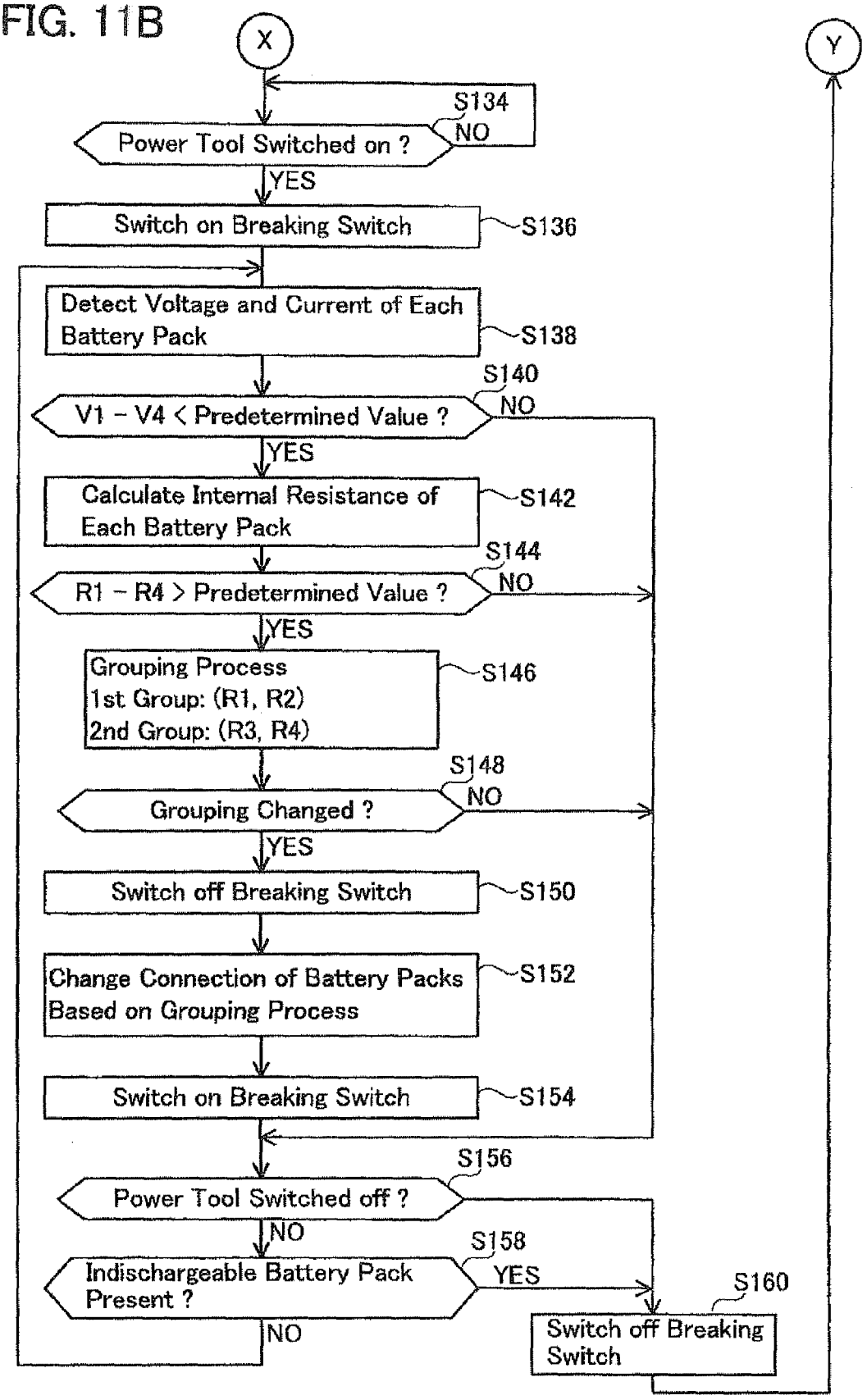
X
Y
S134
Power Tool Switched on ?
NO
YES
Switch on Breaking Switch
S136
Detect Voltage and Current of Each Battery Pack
S138
S140
V1 − V4 < Predetermined Value ?
NO
YES
Calculate Internal Resistance of Each Battery Pack
S142
S144
R1 − R4 > Predetermined Value ?
NO
YES
Grouping Process
1st Group: (R1, R2)
2nd Group: (R3, R4)
S146
S148
Grouping Changed ?
NO
YES
Switch off Breaking Switch
S150
Change Connection of Battery Packs Based on Grouping Process
S152
Switch on Breaking Switch
S154
S156
Power Tool Switched off ?
NO
S158
Indischargeable Battery Pack Present ?
YES
NO
S160
Switch off Breaking Switch

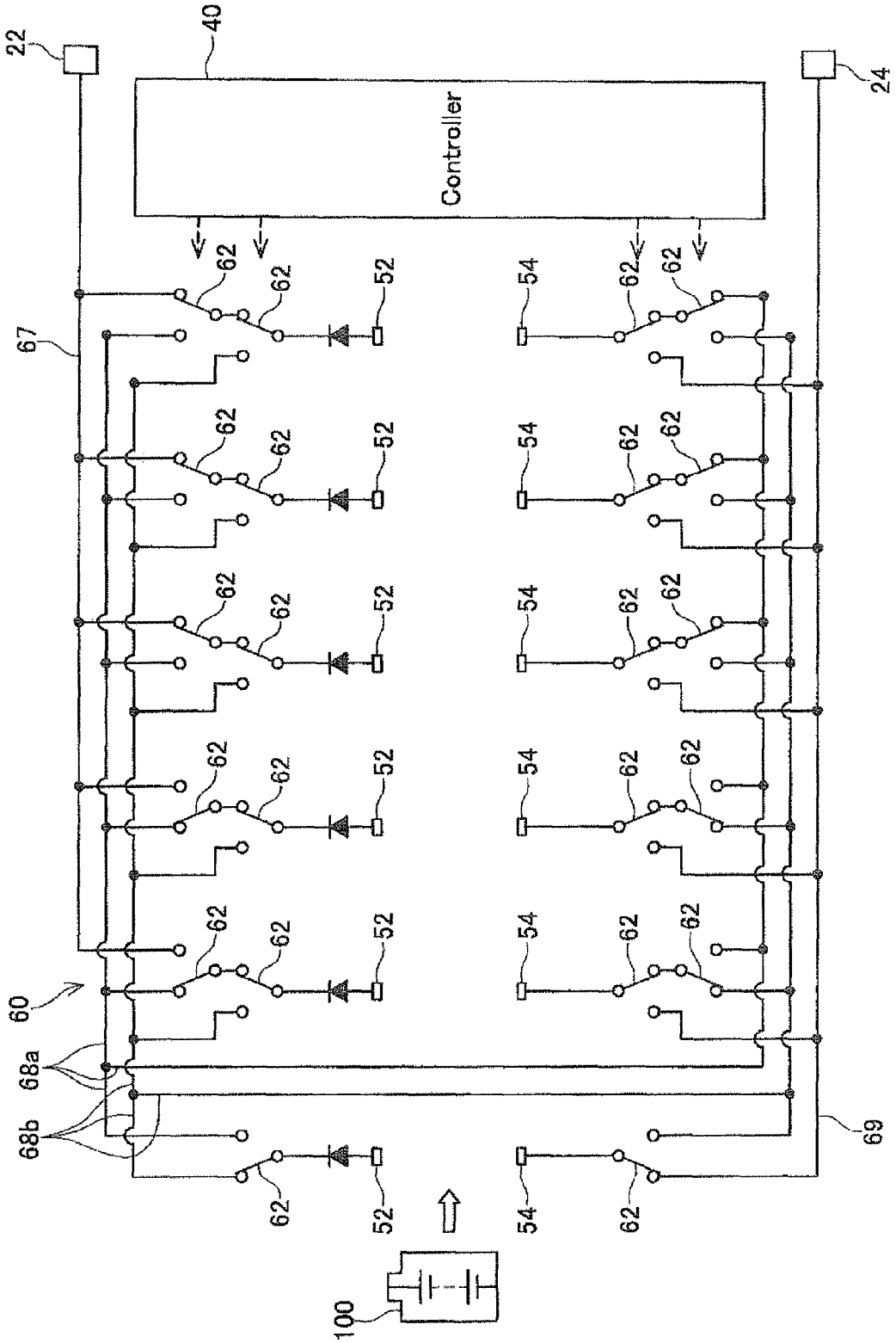

FIG. 12

POWER SUPPLY DEVICE

TECHNICAL FIELD

The present application relates to a device for supplying electric power to an electrical apparatus, and especially to a device for supplying electric power to an electrical apparatus from a plurality of batteries.

BACKGROUND ART

Electrical apparatuses using batteries as an electric power supply have been widely used. In electrical apparatuses of this kind, output can be increased and operation time can be extended by using a plurality of batteries. Thus, where a plurality of batteries connected in series is used, the output of the electrical apparatus can be increased, and where a plurality of batteries connected in parallel is used, the operation time of the electrical apparatus can be extended.

Japanese Patent Application Publication No. 2000-308268 discloses an electric power tool using two battery packs as an electric power supply. In this electric power tool, the attached two battery packs can be connected in series and also can be connected in parallel. Therefore, when the electric power tool is used for a heavy operation, the output of the electric power tool can be increased by connecting the two battery packs in series, and when the electric power tool is used for a light operation, the operation time of the electric power tool can be extended by connecting the two battery packs in parallel.

SUMMARY OF INVENTION

Technical Problem

Large electric power usually can be supplied to an electrical apparatus by connecting a plurality of batteries in series. However, when a plurality of batteries is connected in series, where the batteries are not in a substantially identical state, the entire electric power stored in the plurality of batteries cannot be supplied. For example, let us assume that the amount of electric power remaining in the batteries is not uniform. In the plurality of batteries connected in series, the same current flows in each battery and the batteries are discharged to a substantially identical electric power. Therefore, the battery with a smaller amount of remaining electric power is exhausted before other batteries. Where only some batteries are exhausted, even if energy remains in other batteries, no electric power can be supplied from the plurality of batteries connected in series.

However, it is difficult to prepare a plurality of batteries with a substantially identical amount of remaining electric power, unless new batteries are purchased. Further, when the batteries are rechargeable (secondary batteries), substantially identical amounts of remaining electric power can be obtained among the plurality of batteries by fully charging each of these batteries in advance. However, the charge capacity (amount of remaining electric power in a fully charged state) of a secondary battery decreases according to the usage history (number of usage cycles, usage period, past temperature, etc.) of the secondary battery. Therefore, even if all the batteries are fully charged in advance, where the batteries have different usage histories, there will be a difference in the amounts of remaining electric power.

In the light of the abovementioned problem, in the present specification, there is provided a technique that makes it possible to supply high power to an electrical apparatus by connecting batteries in series and supply a large amount of the electric power stored in a plurality of batteries to the electrical apparatus, even if the amount of remaining electric power in each battery is substantially uneven.

Solution to Technical Problem

The present specification discloses a power supply device that supplies electric power from a plurality of batteries to an electrical apparatus. The power supply device includes a plurality of battery interfaces configured to removably receive at least three batteries, and a connection circuit configured to electrically connect the at least three batteries attached by the interfaces to each other. The connection circuit is capable of connecting at least two batteries in parallel and connecting at least one other battery in series to the at least two parallel-connected batteries.

The battery referred to in the present specification is not limited to a battery cell and also includes a battery pack or a battery assembly incorporating a plurality of batteries. Further, the battery is not limited to a rechargeable secondary battery and may also be a non-rechargeable primary battery.

In the abovementioned device, where at least three batteries are received by the battery interfaces, at least two batteries are connected in parallel, and at least one other battery is connected in series to the at least two parallel-connected batteries. In other words, at least two batteries are connected in series and at least one other battery is connected in parallel to either of the two series-connected batteries. With such a connection, by connecting at least two batteries in series, it is possible to supply high electric power to an electrical apparatus, and by connecting some batteries in parallel, it is possible to reduce the electric power discharged in some batteries.

For example, let us assume that the amount of remaining electric power in each battery is uneven. In this case, in the abovementioned device, the battery with a small amount of remaining electric power might be connected in parallel to another battery, and a battery with a large amount of remaining electric power might be connected in series to the parallel-connected battery group. In this case, the electric power discharged from the battery with a small amount of remaining electric power becomes smaller, and the electric power discharged from the battery with a large amount of remaining electric power becomes larger. As a result, the difference in the amount of remaining electric power among the batteries is reduced. The event in which the electric power of only some of the batteries is rapidly consumed can be avoided, and a larger amount of electric power stored in each of the batteries can be supplied to the electrical apparatus.

It is preferred that the aforementioned connection circuit be capable of changing a combination of batteries connected in parallel without requiring to change positions of the batteries in the battery interfaces. As a result, the connection of the batteries can be adequately changed without removing the batteries from the battery interfaces.

In the abovementioned device, it is preferred that the connection of the batteries be changed according to the amount of remaining electric power in each battery. Further, the output voltage of a battery or the flowing current of a battery rises according to the amount of remaining electric power in the battery. Accordingly, it is preferred that the connection of the batteries be changed according to the output voltage of the batteries or the conduction current of the batteries. Alternatively, the amount of remaining electric power in the battery decreases according to the usage history of the battery. Accordingly, it is preferred that the connection of the batteries be changed according to the usage history (number of usage cycles, usage period, past temperature, etc.) of each battery even if the amount of remaining electric power in each battery is unclear. Further, since the internal resistance of the battery changes according to the usage history of the battery, it is

preferred that connection of the batteries be changed according to the internal resistance of each battery. Further, the amount of heat generated when the battery is discharged increases with the increase in the internal resistance thereof. Therefore, it is preferred that the connection of the batteries be changed according to the battery temperature. It is further preferred that the connection of the batteries be changed according to an indicator indicative of condition of the battery other than the internal resistance of the battery.

As described hereinabove, the connection of the batteries is preferably changed according to the above-described indicator indicative of the condition of the battery, namely, the amount of remaining electric power, output voltage, flowing current, usage history, internal resistance, temperature, and degree of degradation. Accordingly, it is preferred that the abovementioned power supply device include a detector configured to detect at least one indicator indicative of condition of each battery attached to the battery interfaces, and a processor configured to group the at least three batteries attached to the battery interfaces into at least two battery groups such that at least one of the battery groups includes at least two batteries, on the basis of the indicator detected by the detector. In this case, it is preferred that the aforementioned connection circuit be configured to connect batteries grouped in the same battery group in parallel and connect batteries grouped in different battery groups in series. With such a power supply device, the connection of the batteries can be automatically changed according to an indicator indicative of condition of each battery.

It is preferred that the aforementioned detector detects at least the amount of electric power remaining in each battery. In this case, it is preferred that the processor performs the grouping such that a difference in total amounts of electric power between the battery groups becomes minimized. More specifically, as an example, it is preferred that the processor calculate the differences in the total amounts of electric power between the battery groups for at least two different groupings, and select either one of the groupings in which the calculated difference is the smallest. As a result, even when the amount of electric power remaining in the batteries is uneven, the event in which the electric power of only some of the batteries is rapidly consumed can be avoided, and a larger amount of electric power stored in all of the batteries can be, supplied to the electrical apparatus. However, the grouping processing is not limited to the above-described mode, the battery packs may be ranked on the basis of the amount of remaining electric power, and the grouping may be performed on the basis of the ranking. As an example, when three battery packs are used, where the battery pack with the largest amount of remaining electric power is classified into one group and the other two battery packs with a smaller amount of remaining electric power are classified to one group, the grouping can be performed such as to minimize the difference in the total amount of electric power between the battery groups, without calculating the difference.

It is preferred that the power supply device further includes a breaker configured to electrically break the aforementioned connection circuit when the connection circuit changes connection of the batteries. In this case, the breaker may be a contact relay or a contactless semiconductor switch. Where such a breaker is provided, the batteries can be prevented from being erroneously short circuited when connection of the batteries is changed.

It is preferred that the aforementioned breaker be located between two batteries that are connected in series, regardless of a manner of the connection of the batteries that is formed by the connection circuit. As a result, the batteries can be prevented from being erroneously short circuited for all possible changes in the connection of the batteries.

With the technique disclosed in the present specification, it is possible to supply high power to an electrical apparatus by connecting batteries in series and supply a large amount of the electric power stored in a plurality of batteries to the electrical apparatus, even if the amount of remaining electric power in each battery is substantially uneven.

BRIEF DESCRIPTION OF DRAWINGS

FIG. **1** shows schematically a power supply system of an embodiment.

FIG. **2** is a circuit diagram illustrating the electrical configuration of the power supply system.

FIGS. **3**A to **3**F illustrate connections of battery packs that can be realized in the power supply system.

FIG. **4**A is a flowchart illustrating, together with FIG. **4**B, the operation of the power supply system, and in the figures, X in FIG. **4**A is continued by X in FIG. **4**B, and Y in FIG. **4**A is the continuation of Y in FIG. **4**B.

FIG. **4**B is a flowchart illustrating, together with FIG. **4**A, the operation of the power supply system.

FIG. **5**A shows an example of connection of four battery packs formed by a connection circuit, and FIG. **5**B shows schematically the connection shown in FIG. **5**A.

FIG. **6**A shows another example of connection of four battery packs formed by a connection circuit, and FIG. **6**B shows schematically the connection shown in FIG. **6**A.

FIG. **7** is a graph illustrating variations in the flowing current of each battery pack with time.

FIG. **8**A shows an example of connection of three battery packs initially formed by a connection circuit, FIG. **8**B shows schematically the connection shown in FIG. **8**A, FIG. **8**C shows an example of connection of three battery packs formed by a connection circuit after a change, and FIG. **8**D shows schematically the connection shown in FIG. **8**C.

FIG. **9**A shows still another example of connection of three battery packs initially formed by a connection circuit, FIG. **9**B shows schematically the connection shown in FIG. **9**A, FIG. **9**C shows still another example of connection of three battery packs formed by a connection circuit after a change, and FIG. **9**B shows schematically the connection shown in FIG. **9**C.

FIG. **10**A shows yet another example of connection of three battery packs initially formed by a connection circuit, FIG. **10**B shows schematically the connection shown in FIG. **10**A, FIG. **10**C shows yet another example of connection of three battery packs formed by a connection circuit after a change, and FIG. **10**D shows schematically the connection shown in FIG. **10**C.

FIG. **11**A is a flowchart illustrating, together with FIG. **11**B, the operation of the power supply system of Embodiment 2, and in the figures, X in FIG. **11**A is continued by X in FIG. **11**B, and Y in FIG. **11**A is the continuation of Y in FIG. **1**B.

FIG. **11**B is a flowchart illustrating, together with FIG. **11**A, the operation of the power supply system of Embodiment 2.

FIG. **12** is a configuration example illustrating the connection for six battery packs.

DETAILED DESCRIPTION OF INVENTION

(Embodiment 1)

A power supply system of an embodiment will be explained below with reference to the appended drawings. As

shown in FIG. **1**, the power supply system is provided with a power supply device **10** and a plurality of battery packs **100**. The power supply device **10** is a device to which the plurality of battery packs **100** is connected and which supplies power from the plurality of battery packs **100** to a power tool **200**. In this case, the power supply device **10** can supply power not only to the power tool **200**, but also to any other electrical apparatus. Further, the power supply device **10** of the present embodiment is configured separately from the power tool **200**, but the power supply device **10** may be integrally incorporated in the electrically apparatus to which power is supplied.

The power supply device **10** has four battery interfaces **12**. The four battery interfaces **12** are provided at a housing of the power supply device **10**. The battery pack **100** can be detachably attached to each battery interface **12**. Each battery pack **100** is a battery pack for a power tool and can be individually used for power tools of various kinds. For example, the output voltage of each battery pack **100** is substantially 18 volts.

The power supply device **10** supplies power to the power tool **200** from the battery packs **100** attached to the four battery interfaces **12**. The power supply device **10** can supply power to the power tool **200** at a voltage that is about twice as high as the output voltage of the battery pack **100** by connecting at least some of the attached battery packs **100** in series. Thus, where the output voltage of the battery pack **100** is 18 volts, power can be supplied to the power tool **200** at a voltage of 36 volts. The power supply device **10** does not necessarily require four battery packs **100**, and power can be supplied to the power tool **200** at a voltage of about 36 volts by attaching at least two battery packs **100** With the power supply device **10**, by using a plurality of battery packs **100**, it is possible to drive a high-output power tool **200** that cannot be driven by one battery pack **100**.

The power supply device **10** is provided with an output unit **14** that outputs power from the battery packs **100**. The output unit **14** is provided at the housing of the power supply device **10**. A cord **202** of the power tool **200** can be connected thereto. The power outputted by the power supply device **10** is supplied to the power tool **200** via the cord **202**. The power supply device **10** is also provided with a display unit **16**. The display unit **16** is provided at the housing of the power supply device **10**. The display unit **16** has a plurality of light-emitting diodes **18** and displays various types of information such as the amount of remaining electric power in the battery packs **100** by selectively turning off and off the plurality of light-emitting diodes **18**. The display unit **16** may also use another display device, such as a liquid crystal panel, instead of the plurality of light-emitting diodes **18**.

FIG. **2** is a circuit diagram illustrating the electrical configuration of the power supply device **10**. FIG. **2** shows four battery packs **100** attached to the power supply device **10**. Initially, the electrical configuration of the battery pack **100** will be explained. As shown in FIG. **2**, the battery pack **100** is provided with a plurality of battery cells **110**, a pair of battery output elements **102**, **104**, a temperature-sensing element **112**, a battery controller **114**, and a battery communication terminal **106**. Each battery cell **110** is a secondary battery cell, more specifically, a lithium ion battery cell. The pair of battery output elements **102**, **104** is provided with the battery positive electrode terminal **102** and the battery negative electrode terminal **104**.

The pair of battery output terminals **102**, **104** is connected to the plurality of battery cells **110** and output the power from the plurality of battery cells **110**. The temperature-sensing element **112** is disposed close to the plurality of battery cells **110** and measures the temperature of the plurality of battery cells **110**. The battery controller **114** is connected to the plurality of battery cells **110** and the temperature-sensing element **112**. The battery controller **114** has a computational circuit and a storage circuit and monitors the voltage and temperature of the plurality of battery cells **110**. As a result, the battery controller **114** creates and stores usage history information (including the number of charge cycles and past temperature) of the battery packs **100**. The battery controller **114** also stores product information such as model, rated voltage, and rated capacity of the battery packs **100**. The battery controller **114** is connected to the battery communication terminal **106** and can perform communication via the battery communication terminal **106** with an external device such as a charger or the power supply device **10** of the present embodiment.

The electrical configuration of the power supply device **10** will be described below. As shown in FIG. **2**, the power supply device **10** is provided with a pair of output terminals **22**, **24**, four pairs of battery connection terminals **52**, **54**, and a connection circuit **60** that electrically connects the pair of output terminals **22**, **24** and the four pairs of battery connection terminals **52**, **54**. The pair of output terminals **22**, **24** includes the positive electrode output terminal **22** and the negative electrode output terminal **24**. The pair of output terminals **22**, **24** is provided at the output unit **14** shown in FIG. **1** and electrically connected by the cord **202** to the power tool **200**.

The four pairs of battery connection terminals **52**, **54** are provided at respective four battery interfaces **12**. Thus, each battery interface **12** is provided with a pair of battery connection terminals **52**, **54**. Each pair of battery connection terminals **52**, **54** is provided with the positive electrode connection terminal **52** and the negative electrode connection terminal **54**. Where the battery pack **100** is attached to the battery interface **12**, the pair of battery connection terminals **52**, **54** is electrically connected to the pair of battery output terminals **102**, **104** of the battery pack **100**. As a result, the DC power from the battery pack **100** is supplied via the pair of battery connection terminals **52**, **54** to the power supply device **10**. The DC power inputted from the battery connection terminals **52**, **54** is outputted via the connection circuit **60** from the pair of output terminals **22**, **24**.

In addition, one communication terminal **56** is further provided at each battery interface **12**. The communication terminal **56** is electrically connected to the battery communication terminal **106** of the battery pack **100** attached to the battery interface **12**. Thus, where the battery pack **100** is attached to the battery interface **12**, the battery controller **114** is communicatively connected to the power supply device **10**.

The connection circuit **60** has a high-potential connection wire **67**, a medium-potential connection wire **68**, a low-potential connection wire **69**, six relays **62**, four diodes **64**, and a breaking switch **66**. The high-potential connection wire **67** is connected to the positive electrode output terminal **22**, and the low-potential connection wire **69** is connected to the negative electrode output terminal **24**. The medium-potential connection wire **68** is provided independently from the high-potential connection wire **67** and the low-potential connection wire **69**. Where the relays **62** are switched by the connection circuit **60**, each positive electrode connection terminal **52** is electrically connected to one of the high-potential connection wire **67** and the medium-potential connection wire **68**, and each negative electrode connection terminal **54** is electrically connected to one of the medium-potential connection wire **68** and the low-potential connection wire **69**. However, concerning the pair of battery connection terminals **52**, **54** positioned at the leftmost side in FIG. **2**, the positive electrode connection terminal **52** is directly connected to the

medium-potential connection wire **68** and the negative electrode connection terminals **54** is directly connected to the low-potential connection wire **69** in order to reduce the number of relays **62**. As a result, eight relays **62** are not required, and the connection of the four attached battery packs **100** can be performed by selectively switching six relays **62**.

Each diode **64** is connected to the positive electrode connection terminal **52** to prevent a reverse current from flowing to the battery pack **100**. The breaking switch **66** is provided at the medium-potential connection terminal **68**. The breaking switch **66** is an element that electrically disconnects the connection circuit **60** as necessary. In the present embodiment, a field effect transistor (FET) is used as the breaking switch. In this case, a configuration can be used in which a semiconductor switch such as a field effect transistor is used for each relay **62**, thereby making it possible to change the connection state instantaneously. Each relay **62** may be a contact relay or a contactless semiconductor switch.

FIG. **3** illustrates connection of a plurality of battery packs **100** that can be performed by the connection circuit **60**. In the case where two battery packs **100** are attached, as shown in FIG. **3**A, the connection circuit **60** connects the two battery packs **100** in series. Where at least three battery packs **100** are attached, as shown in FIGS. **3**B to **3**F, the connection circuit **60** connects at least two battery packs **100** in parallel and connects at least one another battery pack **100** in series to the at least two parallel-connected battery packs **100**. In any connection mode, since there are two series-connected battery packs **100**, the power supply device **10** can supply electric power to the power tool **200** at a voltage (in the present embodiment, 36 volts) that is twice the output voltage of a single battery pack **100**.

In all of the connection modes shown in FIGS. **3**A to **3**F, electric power is supplied to the power tool **200** at substantially the same voltage (36 volts). However, the current flowing in each battery pack **100** changes differently depending on the connection mode. For example, with the connection shown in FIG. **3**A, substantially the same current flows in the battery pack **100** positioned at the upper stage and the battery pack **100** positioned at the lower stage, and substantially the same electric power is discharged from each battery pack **100** (the amounts of power discharged per unit time are substantially the same). Let us assume, for example, that the amount of remaining electric power in the battery pack **100** positioned at the upper stage is 100% (ratio to the capacitance), and the amount of remaining electric power in the battery pack **100** positioned at the lower stage is 50%. In this case, the electric power in the battery pack **100** positioned at the lower stage will be consumed earlier, and at this point of time, no power can be anymore supplied from the two series-connected battery packs **100** even though the electric power of 50% still remains in the battery pack **100** positioned at the upper stage. Thus, even when the total electric power of 150% remains in the two prepared battery packs **100** (1.5 times the power of the fully charged battery pack **100**), eventually only the electric power of 100% (power of one fully charged battery pack) can be supplied. Thus, when electric power is supplied by only two battery packs **100**, the entire electric power stored in the battery packs **100** cannot be supplied, unless the amount of remaining electric power in the two battery packs **100** is substantially the same.

By contrast, for example, in the connection mode shown in FIG. **3**B, a large current flows in the battery pack **100** positioned at the upper stage and a small current flows in the two battery packs **100** positioned at the lower stage. Therefore, there is a difference in electric power discharged by each battery pack **100** (amount of electric power discharged per unit time) between the battery pack **100** positioned at the upper stage and the two battery packs **100** positioned at the lower stage. Simply speaking, the electric power discharged by each battery pack **100** positioned at the lower stage is substantially half that discharged by the battery pack **100** positioned at the upper stage. Let us assume, for example, that the amount of remaining electric power in the battery pack **100** positioned at the upper stage is 100%, and the amount of remaining electric power in the battery pack **100** positioned at the lower stage is 50%. In this case, the electric power discharged by each battery pack **100** positioned at the lower stage is substantially half that discharged by the battery pack **100** positioned at the upper stage. As a result, the three battery packs **100** discharge the entire power at substantially the same timing and the entire stored power can be discharged. Thus, the entire amount of power of a total of 200% (two amounts of power in a fully charged battery pack) remaining in the three prepared battery packs **100** can be supplied to the power tool **200**. Therefore, by adding only one battery pack **100** with an amount of remaining electric power of 50%, it is possible to supply additional electric power corresponding to that of one fully charged battery pack In comparison with the connection mode shown in FIG. **3**B explained in the preceding paragraph.

As mentioned hereinabove, in the power supply device **10** of the present embodiment, at least three battery packs **100** can be connected by combining parallel connection with series connection. As a result, electric power can be supplied at a high voltage to the power tool **200**. Furthermore, even when the amount of remaining power in the battery packs **100** is not uniform, larger amount of electric power stored in the battery packs **100** can be supplied. Since the connection is changed by the relays **62**, the user is not required to change the positions of the battery packs **100** attached to the battery interfaces **12**. Further, in the power supply device **10** of the present embodiment, it is possible, as will be described hereinbelow, to detect the amount of remaining power in the attached battery packs **100** and form automatically the adequate connection.

In addition, as shown in FIGS. **3**A to **3**F, with all connections formed by the connection circuit **60**, the breaking switch **66** can be introduced between the battery packs **100** that are connected in series to each other. As a result, the battery packs **100** can be reliably prevented from being short circuited by switching off (opening) the breaking switch **66** when the connection is changed.

Another configuration of the power supply device **10** will be explained below. As shown in FIG. **2**, the power supply device **10** is provided with a tool switch detection unit **30**, a backup power supply unit **70**, and a main controller **40**.

The main controller **40** is configured by using a microcomputer and has a computational circuit and a storage circuit. The main controller is connected to the relays **62** of the connection circuit **60** and can selectively switch the six relays **62**. Further, the main controller **40** is connected by voltage detection lines **42**, **44** to the connection circuit **60** and can detect the output voltage, flowing current, amount of remaining electric power, and internal resistance of each battery pack **100** on the basis of the voltage of the voltage detection lines **42**, **44**. For example, the main controller **40** can detect the output voltage of each battery pack **100** on the basis of the voltage of the voltage detection line **44**. The main controller **40** can also calculate the amount of remaining electric power in each battery pack **100** on the basis of the detected output voltage. The main controller **40** can also detect the flowing current in the battery pack **100** on the basis of a difference in voltage between the voltage detection line **42** and the voltage

detection line **44**. In this case, a difference in voltage caused by the diode **64** occurs in response to the flowing current of the battery pack **100** between the voltage detection line **42** and the voltage detection line **44**. Furthermore, the main controller **40** can also calculate the internal resistance of the battery pack **100** on the basis of the detected output voltage and flowing current of the battery pack **100**.

The main controller **40** is connected to each light-emitting diode **18** of the display unit **16** and can selectively on/off switch the three light-emitting diodes **18**. The main controller **40** is connected to the breaking switch **66** of the connection circuit **60** and can on/off switch the breaking switch **66**. The main controller **40** is connected to each communication terminal **56** and can be communicatively connected to the battery controller **114** of the battery pack **100**. As a result, the main controller **40** can read the usage history information and product information stored in the battery controller **114**.

The backup power supply unit **70** receives power supply from the battery packs **100** and supplies electric power to the main controller **40**. The backup power supply unit **70** has a power storage unit such as a capacitor or secondary battery and can supply power to the main controller **40** even when the battery packs **100** are not attached. Where each relay **62** is switched as shown in FIG. **2** at the initial stage, when at least one battery pack **100** is attached to any of the battery interfaces **12**, power supply to the backup power supply unit **70** is started. In this case, the backup power supply unit **70** does not necessarily require a power storage unit.

The tool switch detection unit **30** is configured by using a capacitor **32**, a resistor **34**, a transistor **36**, and a diode **38**. The capacitor **32**, the resistor **34**, and the transistor **36** are connected in series. The diode **38** is connected in parallel to the transistor **36** in reverse polarity. The tool switch detection unit **30** is connected to the pair of output terminals **22**, **24** and the main controller **40**. The main controller **40** can detect the voltage of the capacitor **32** and control the operation of the transistor **36**. The main controller **40** can detect with the tool switch detection unit **30** that the switch of the power tool **200** has been switched on.

The tool switch detection unit **30** will be described below in greater detail. The main controller **40** detects the voltage of the capacitor **32** and, where the capacitor **32** is not charged, charges the capacitor **32** by switching on the transistor **36**. In this case, the main controller **40** issues a command to the breaking switch **66** of the connection circuit **60** and the breaking switch **66** is also switched on. The power for charging the capacitor **32** is supplied from the battery pack **100**. Where the main controller **40** then detects that the charging of the capacitor **32** has been completed, the main controller switches off the breaking switch **66** of the connection circuit **60** and the transistor **36** of the tool switch detection unit **30**.

Where the switch of the power tool **200** is switched on, the electric power charged into the capacitor **32** is supplied through the pair of output terminals **22**, **24** to the power tool **200**. In this case, the breaking switch **66** of the connection circuit **60** is switched off. Therefore, the voltage of the capacitor **32** decreases or the voltage between the terminals of the resistor **34** changes from positive to negative. The main controller **40** can detect that the switch of the power tool **200** has been switched on by detecting these voltage variations. Meanwhile, where the main controller **40** detects that no electric current flows in any of the battery packs **100**, the switch of the power tool **200** is determined to be switched off,

The operation of the power supply device **10** will be described below with reference to the flowcharts shown in FIGS. **4**A and **4**B. In step S**10**, the power supply device **10** is in a standby mode till the battery packs **100** are attached to the battery interfaces **12**. The attachment of the battery packs **100** is detected by the main controller **40**. The main controller **40** detects the attachment of the battery packs **100** by monitoring the voltage of the voltage detection line **44**. Where the four battery packs **100** have been attached or a predetermined time has elapsed since the first battery pack **100** has been attached, the main controller **40** advances to step S**12**. In this case, the explanation is continued under an assumption that the four battery packs **100***a* to **100***d* have been attached, as shown in FIG. **5**A.

In step S**12**, the main controller **40** detects the amount of remaining electric power in each battery pack **100**. The amount of remaining electric power in the battery packs **100** is detected on the basis of the output voltage of the battery packs **100**. Thus, the main controller **40** detects the output voltage of each battery pack **100** with the voltage detection line **44** and calculates the amount of remaining electric power in each battery pack **100** on the basis of the detected output voltage. In this case, the explanation below is continued under an assumption that the amount of remaining electric power in one battery pack **100***a* is about 100% and the amount of remaining electric power in other three battery packs **100***b* to **100***d* is about 40%. In the drawings, the amount of remaining electric power in the battery packs **100** is schematically shown by hatching.

In step S**14**, the main controller **40** determines whether or not there are two or more dischargeable battery packs **100** on the basis of the amount of remaining electric power in each battery pack **100** detected in step S**12**. Where there are two or more battery packs **100** with remaining electric power, the main controller **40** advances to step S**16**, otherwise the main controller advances to step S**50**. In the case where only one battery pack **100** is attached, the main controller **40** advances to the processing of step S**50** because two or more battery packs **100** with remaining electric power are not present. In the case of advancing to step S**50**, the main controller **40** displays with the display unit **16** that the discharge is impossible and requests that the user replace the battery packs **100** (end of processing).

After advancing to step S**16**, the main controller **40** ranks the battery packs **100** on the basis of the amount of remaining electric power in each battery pack **100** detected in step S**12**. Thus, the battery pack with the largest amount of remaining electric power X**1** is taken as the first battery pack **100**, the battery pack with the second largest amount of remaining electric power X**2** is taken as the second battery pack **100**, the battery pack with the third largest amount of remaining electric power X**3** is taken as the third battery pack **100**, and the battery pack with the fourth largest amount of remaining electric power X**4** is taken as the fourth battery pack **100**. In the example shown in FIG. **5**A, the battery pack **100***a* having an amount of remaining electric power of 100% is taken as the first battery pack, and the battery packs **100***b* to **100***d* having an amount of remaining electric power of 40% are taken as the second to fourth battery packs.

Then, in steps S**18**, S**20**, and S**22**, the main controller **40** performs the grouping of the four attached battery packs **100** into two battery groups. In this case, the main controller **40** performs the grouping of the battery packs **100** such that a difference in total amounts of electric power calculated for each battery group is minimized. For this purpose, in step S**18**, the main controller **40** determines whether or not Equation (1) below is fulfilled. The total amount of electric power of a battery group means the total amount of remaining electric power in one or a plurality of battery packs **100** included in the battery group.

$$|X1-(X2+X3+X4)|<|(X1+X4)-(X2+X3)| \quad (1)$$

The left side of Equation (1) above is an expression for calculating the difference in total amounts of electric power (X1 and X2+X3+X4) between battery groups in the case where one battery group is constituted only by the first battery pack **100***a* and the other battery group is constituted by the second to fourth battery packs **100***b* to **100***d* (referred to hereinbelow as the first grouping). The right side of Equation (1) above is an expression for calculating the difference in total amounts of electric power (X1+X4 and X2+X3) between battery groups in the case where one battery group is constituted by the first and fourth battery packs **100***a* and **100***d* and the other battery group is constituted by the second and third battery packs **100***b* and **100***c* (referred to hereinbelow as the second grouping). Thus, Equation (1) above determines the relationship between the difference in the total amounts of electric power between the battery groups in the case of the first grouping and the difference in the total amounts of electric power between the battery groups in the case of the second grouping. When Equation (1) is fulfilled, the main controller **40** advances to step S**20**; otherwise, the main controller **40** advances to step S**22**.

In steps S**20**, S**22**, the grouping of the battery packs **100***a* to **100***d* is determined. When the processing has advanced to step S**20**, the main controller **40** uses the first grouping. Thus, the first battery pack **100***a* is classified into one battery group and the second to fourth battery packs **100***b* to **100***d* are classified into the other battery group. Where the processing has advanced to step S**22**, the main controller **40** uses the second grouping. Thus, the first and fourth battery packs **100***a* and **100***d* are classified into one battery group and the second and third battery packs **100***b* and **100***c* are classified into the other battery group. As a result, among the first and second groupings, the grouping with a smaller difference in the total amounts of electric power calculated for each battery group is selected. Where the amount of remaining electric power X1 of the first battery pack **100***a* is 100% and the amounts of remaining electric power X2 to X4 of the second to fourth battery packs **100***b* to **100***d* are 40%, as has been assumed hereinabove, the first grouping is selected.

In steps S**24** to S**28**, connection of the four battery packs **100** is changed on the basis of the grouping determined by the grouping processing. First, in step S**24**, the main controller **40** determines whether or not the grouping has been changed in the above-described grouping processing. Thus, it is determined whether the same grouping has been selected again or a different grouping has been selected, as compared with the state prior to the grouping processing. Where the grouping is changed, the main controller **40** advances to step S**26**; otherwise, the main controller advances to step S**30**. Thus, where the grouping is not changed, the connection is also not changed.

In step S**26**, the main controller **40** turns off the breaking switch **66** prior to changing the connection. As a result, the medium-potential connection wire **68** of the connection circuit **60** is electrically disconnected and the formation of an unintended connection path, for example, such that erroneously short circuits the battery packs **100** is prevented. Then, in step S**28**, the main controller **40** selectively switches the relays **62** of the connection circuit **60** on the basis of the determined groupings. More specifically, the relays **62** are selectively switched so that the battery packs **100** classified into the same battery group are connected in parallel and the battery packs **100** classified into different battery groups are connected in series. Where the first grouping is selected, as assumed hereinabove, the relays **62** are switched as shown in FIG. **5**A. As a result, as shown in FIG. **5**B, the connection circuit **60** connects in parallel the second to fourth battery packs **100***b* to **100***d* that are classified to the same battery group and connects the first battery pack **100***a* in series with the second to fourth parallel-connected battery packs **100***b* to **100***d*.

In step S**30**, the main controller **40** calculates the total amounts of electric power remaining in all of the battery packs **100**. Then, in step S**32**, the main controller **40** displays the calculated total amounts of electric power on the display unit **16**. The power display device **10** of the present embodiment can use substantially all the total amounts of electric power remaining in all of the battery packs **100** by adequately changing the connection of the battery packs **100**. Therefore, the total amount of electric power displayed by the display unit **16** accurately matches the amount of electric power that is actually supplied by the power supply device **10**.

In step S**34**, the power supply device **10** stands by till the switch of the power tool **200** is switched on. In this case, the tool switch detection unit **30** detects that the power tool **200** is switched on. At this point in time, the breaking switch **66** of the connection circuit **60** is switched off. Therefore, even if the power tool **200** is switched on, no electric power is supplied from the battery packs **100** to the power tool **200**. The main controller **40** advances to the processing of step S**36** when the power tool **200** is detected to be switched on.

In step S**36**, the main controller **40** switches on the breaking switch **66** of the connection circuit **60**. As a result, the supply of electric power from the battery packs **100** to the power tool **200** is started. In step S**38**, the main controller **40** detects the output voltage and flowing current of each battery pack **100**. The output voltage and flowing current of each battery pack **100** are detected on the basis of the voltage of the voltage detection lines **42**, **44**.

In step S**40**, the main controller **40** determines whether or not the switch of the power tool **200** is off. In this case, the power tool **200** is switched off on the basis of the flowing current detected in step S**36**. Thus, where the flowing current of all of the battery packs **100** is zero, the main controller **40** determines that the switch of the power tool **200** has been switched off. Where the switch of the power tool **200** is switched off, the main controller **40** advances to step S**42** and switches off the breaking switch **66**. The processing then returns to step S**12**.

Where the switch of the power tool **200** is not switched off, the main controller **40** directly returns from step S**40** to step S**12**. In this case, power supply to the power tool **200** is continued. Where the processing returns to step S**12**, the above-described grouping of the battery packs **100** and the change of connection based on the grouping are performed again. Thus, the connection of the battery packs **100** is changed as appropriate according to the amount of remaining electric power in each battery pack **100** even when the electric power is supplied to the power tool **200**.

As the electric power is supplied to the power tool **200**, the amount of remaining electric power in each battery pack **100** decreases. With the connection shown by way of example in FIGS. **5**A and **5**B, the power discharged from the first battery pack **100***a* is about three times that discharged from the parallel-connected other battery packs **100***b* to **100***d*. Therefore, the difference between the amount of remaining electric power in the first battery pack **100***a* (X1=100%) and the amount of remaining electric power in the second to fourth battery packs **100***b* to **100***d* (X2 to X4=40%) gradually decreases, and at a state at which 90% of the amount of electric power of the first battery pack **100***a* is consumed, the amount of remaining electric power becomes the same in all

of the battery packs **100***a* to **100***d* (per calculations, X**1** to X**4**=10%). Where the connection shown in FIGS. **5**A and **5**B is maintained as is at this stage, the first battery pack **100***a* is the first to be exhausted and the power supply is interrupted, while electric power still remains in other battery packs **100***b* to **100***d*.

However, in the power supply device **10** of the present embodiment, the connection of the battery packs **100***a* to **100***d* is changed according to the amount of remaining electric power in the battery packs **100***a* to **100***d*. More specifically, where the amount of remaining electric power in all of the battery packs **100***a* to **100***d* is the same (X**1** to X**4**=10%), the connection of the battery packs **100***a* to **100***d* is changed to that shown in FIGS. **6**A and **6**B. In the connection shown in FIGS. **6**A and **6**B, all of the battery packs **100***a* to **100***d* discharge the same electric power. Therefore, the electric power stored in all of the battery packs **100***b* to **100***d* can be completely discharged at about the same time. As a result, the electric power of all of the battery packs **100***b* to **100***d* is supplied without a loss to the power tool **200**.

FIG. **7** shows the flowing current of the battery packs **100***a* to **100***d*. From the time **0** to the time t**1**, power supply is performed in the connection state shown in FIGS. **5**A and **5**B, and from the time t**1** to the time t**2**, power supply is performed in the connection state shown in FIGS. **6**A and **6**B. As shown by graphs A and B, before the time t**1**, the flowing current of the first battery pack **100***a* is large and the flowing current of the second to fourth battery packs **100***b* to **100***d* is small. Where the connection is changed at the time ti, the flowing current in all of the battery packs **100***a* to **100***d* becomes about the same, as shown by graph C. At the time t**2**, power supply from the battery packs **100***a* to **100***d* ends. Where the connection is not changed at the time t**1**, power supply from the battery packs **100***a* to **100***d* ends before the time t**2**. Graph D in FIG. **7** illustrates the case in which the battery packs **100***a* to **100***d* are connected as shown in FIGS. **6**A and **6**B from the very beginning (time **0**). In this case, the second to fourth battery packs **100** with a small amount of remaining electric power are exhausted early and therefore, as shown in graph D, the power supply ends before the time t**1**.

FIGS. **8**A to **8**D, **9**A to **9**D, and **10**A to **10**D illustrate the state in which three battery packs **100** are attached to the power supply device **10**. Each of FIGS. **8**A, **9**A, and **10**A shows the connection initially formed by the connection circuit **60**. Each of FIGS. **8**B, **9**B, and **10**B shows schematically the connection shown in FIGS. **8**A, **9**A, and **10**A respectively, FIGS. **8**C, **9**C, and **10**C shows the connection formed thereafter by the connection circuit **60**, and FIGS. **8**D, **9**D, and **10**D shows schematically the connection shown in FIGS. **8**C, **9**C, and **10**C. The attachment positions of the three battery packs **100***a* to **100***c* differ among FIGS. **8**A-D, **9**A-D and **10**A-**10**D. Even when only three battery packs **100***a* to **100***c* are connected, the connection circuit **60** forms the adequate connection according to the amount of remaining electric power in the battery packs **100***a* to **100***c*. Therefore, as shown in FIGS. **8**A, **8**B, **9**A, **9**B, **10**A and **10**B, the connection circuit **60** can realize substantially the same connection, regardless of the attachment positions of the battery packs **100***a* to **100***c*. Then, as shown in FIGS. **8**C, **8**D, **9**C, **9**D, **10**C and **10**D, even when the connection is changed according to the variations in the amount of remaining electric power, the connection circuit **60** realizes substantially the same connection.

(Embodiment 2)

The power supply system of Embodiment 2 will be explained below. In the power supply system of Embodiment 2, the processing performed by the main controller **40** in the power supply device **10** of Embodiment 1 is changed. No particular changes are required to be made in the mechanical and electrical configuration of Embodiment 1, and the reference numerals same as those of Embodiment 1 are used in the explanation below.

FIGS. **11**A and **11**B are flowcharts illustrating the operation of the power supply device **10** of Embodiment 2. Where the battery packs **100** are attached to the battery interface **12** (step S**110**), the main controller **40** detects the output voltage of each battery pack **100** (S**112**). In step S**114**, the main controller **40** determines whether or not there are two or more dischargeable battery packs **100** on the basis of the output voltage of each battery pack **100** detected in step S**112**. When the detected output voltage is less than a predetermined discharge end voltage, the main controller **40** determines that the battery packs **100** cannot be discharged. Where there are two or more dischargeable battery packs **100**, the main controller **40** advances to the processing of step S**116**; otherwise, the main controller advances to the processing of step S**170**. When the processing has advanced to step S**170**, the main controller **40** displays with the display unit **16** that the discharge is impossible and requests that the user replace the battery packs **100** (end of processing).

When the processing advances to step S**116**, the main controller **40** ranks the battery packs **100** on the basis of the output voltage of the battery packs **100** detected in step S**112**. Thus, the battery pack with the highest output voltage V**1** is taken as the first battery pack **100**, the battery pack with the second highest output voltage V**2** is ranked as the second battery pack **100**, the battery pack with the third highest output voltage V**3** is ranked as the third battery pack **100**, and the battery pack with the fourth highest output voltage V**4** is ranked as the fourth battery pack **100**. The output voltage of the battery packs **100** depends on the amount of remaining electric power in the battery packs **100**. Therefore, the ranking of the battery packs **100** based on the output voltage, which is performed in Embodiment 2 in most cases produces the same result as the ranking of the battery packs **100** based on the amount of remaining electric power, which is performed in Embodiment 1.

Then, in steps S**118**, S**120**, and S**122**, the main controller **40** performs the grouping of the four attached battery packs **100** into two battery groups. In this case, the main controller **40** performs the grouping of the battery packs **100** such that a difference in total output voltages calculated for each battery group is minimized. For this purpose, in step S**118**, the main controller **40** determines whether or not Equation (2) below is fulfilled.

$$|V1-(V2+V3+V4)|<|(V1+V4)-(V2+V3)| \quad (2)$$

The left side of Equation (2) above is an expression for calculating the difference in total output voltages (V**1** and V**2**+V**3**+V**4**) between battery groups in the case where one battery group is constituted only by the first battery pack **100***a* and the other battery group is constituted by the second to fourth battery packs **100***b* to **100***d* (referred to hereinbelow as the first grouping). The right side of Equation (2) above is an expression for calculating the difference in total output voltages (V**1**+V**4** and V**2**+V**3**) between battery groups in the case where one battery group is constituted by the first and fourth battery packs **100***a* and **100***d* and the other battery group is constituted by the second and third battery packs **100***b* and **100***c* (referred to hereinbelow as the second grouping). Thus, Equation (2) above determines the relationship between the difference in total output voltages between the battery groups in the case of the first grouping and the difference in total output voltages between the battery groups in the case of the second grouping. When Equation (2) is fulfilled, the main

controller **40** advances to step S**120**; otherwise, the main controller **40** advances to step S**122**.

In steps S**120**, S**122**, the grouping of the battery packs **100***a* to **100***d* is determined. When the processing has advanced to step S**120**, the main controller **40** uses the first grouping. Where the processing has advanced to step S**122**, the main controller **40** uses the second grouping. As a result, among the first and second groupings, the grouping with a smaller difference in the total output voltages calculated for each battery group is selected. In steps S**124** to S**128**, connection of the four battery packs **100** is changed on the basis of the grouping determined by the grouping processing. The processing of steps S**124** to S**128** is substantially identical to that of steps S**24** to S**28** shown in FIG. **4**A and explained in Embodiment 1.

In step S**130** the main controller **40** calculates the total amount of electric power remaining in all of the battery packs **100**. The total amount of electric power is calculated on the basis of the detected output voltage of the battery packs **100**. Then, in step S**132**, the main controller **40** displays the calculated total amount of electric power on the display unit **16**. In step S**134**, the power supply device **10** stands by till the switch of the power tool **200** is switched on. Where the power tool **200** is switched on and the processing advances to step S**136**, the main controller **40** switches on the breaking switch **66** of the connection circuit **60**. As a result, the supply of power from the battery packs **100** to the power tool **200** is started. In step S**138**, the main controller **40** detects the output voltage and flowing current of each battery pack **100**. The processing of steps S**130** to S**138** is substantially identical to the processing of steps S**30** to S**38** shown in FIGS. **4**A and **4**B and explained in Embodiment 1.

In step S**140**, the main controller **40** determines whether or not the difference between the output voltage V**1** of the first battery pack **100** having the highest voltage and the output voltage V**4** of the fourth battery pack **100** having the lowest voltage is less than a predetermined determined value. In this case, where the difference V**1**−V**4** between the output voltages is less than the determination value, it is possible to determine that the output voltages of the four battery packs **100** are substantially identical and the spread therebetween can be ignored. Thus, it is possible to determine that no large spread in the amount of remaining electric power is present among the four battery packs **100**. In this case, the processing advances to step S**142** and the processing of changing the connection based on the internal resistance of the battery packs **100** is performed. Meanwhile, where the difference V**1**−V**4** between the output voltages is equal to or greater than the determination value, the processing advances to step S**156** and the present connection based on the output voltage of the battery packs **100** is maintained.

In step S**142**, the main controller **40** detects the internal resistance of each battery pack **100**. The internal resistance of battery packs **100** is calculated from the output voltage and flowing current of the battery packs **100** detected in step S**112** and step S**138**. Thus, the internal resistance is calculated for each battery pack **100** by using the output voltage in a no-conduction state and the output voltage and flowing current in the conduction state.

In step S**144**, the main controller **40** calculates the difference between the detected maximum internal resistance R**1** and minimum internal resistance R**4** and determines whether or not the difference R**1**−R**4** in the internal resistance exceeds a predetermined determination value. Where the difference R**1**−R**4** in the internal resistance is equal to or less than the determination value, the internal resistance of the four battery packs **100** is substantially uniform and judgment can be made that internal resistance variation among the battery packs is negligible. In such a case, the processing advances to step S**156** and the present connection state based on the output voltage of the battery packs **100** is maintained. Meanwhile, where the difference R**1**−R**4** in the internal resistance exceeds the determination value, it can be determined that a spread that cannot be ignored is present among the four battery packs **100**. In this case, the processing advances to step S**146** and the processing of changing the connection based on the internal resistance is continued.

In step S**146**, the main controller **40** performs the grouping of the four battery packs **100** into two battery groups on the basis of the internal resistance of each battery pack **100**. In the grouping, the two battery packs **100** having the largest internal resistance R**1** and the second largest internal resistance R**2** are classified in one battery group, and the two battery packs **100** having the third largest internal resistance R**3** and the fourth largest internal resistance R**4** are classified into the other battery group. With such grouping, the battery packs **100** with close internal resistances are classified into the same battery group.

In steps S**148** to S**154**, the connection of the battery packs **100** is changed on the basis of the determined grouping. First, in step S**148**, the main controller **40** determines whether or not the grouping has been changed in the above-described grouping processing. Where there is a change in the grouping, the main controller **140** advances processing to step S**150**; otherwise, the processing advances to step S**156**. Thus, where the grouping is not changed, the connection is also not changed. In step S**150**, the main controller **40** turns off the breaking switch **66** before the connection is changed. Then, in step S**152**, the main controller **40** selectively switches the relays **62** of the connection circuit **60** on the basis of the determined grouping. More specifically, the relays **62** are selectively switched so that the battery packs **100** classified into the same battery group are connected in parallel and the battery packs **100** classified into different battery groups are connected in series. Thus, the connection shown in FIG. **3**F is formed. Then, in step S**154**, the main controller **40** again switches on the breaking switch **66**. As a result, the supply of electric power to the power tool **200** is restarted.

As a result of the above-described change of connection, the battery packs **100** with close internal resistances are connected in parallel to each other. Therefore, the flowing current can be prevented from being unevenly distributed to one battery pack **100** among the parallel-connected two battery packs **100**. As a result, overheating or abnormal degradation of the battery packs **100** is inhibited.

In step S**156**, the main controller **40** determines whether or not the switch of the power tool **200** is switched off. Where the switch of the power tool **200** is switched off, the main controller **40** advances to step S**160** and switches off the breaking switch **66**. The processing then returns to step S**112**. Where the switch of the power tool **200** is not switched off, the processing advances to step S**158** and the main controller **40** detects whether the battery pack **100** that cannot be discharged is present. Whether or not the battery pack **100** can be discharged is determined on the basis of the output voltage of the battery pack **100** detected in step S**138**. When the battery pack **100** that cannot be discharged is present, the main controller **40** advances to step S**160** and switches off the breaking switch **66**. Otherwise, the main controller **40** returns to the processing of step S**112**.

As described hereinabove, with the power supply deice **10** of Embodiment 2, the connection of battery packs **100** can be changed on the basis of output voltage and flowing current of the battery packs **100**. In particular, the main controller **40** can

detect the internal resistance from the output voltage and flowing current of the battery packs **100** and determine the connection of the battery packs **100** on the basis of the detected internal resistance. As a result, a large amount of electric power stored in the battery packs **100** can be supplied, while suppressing the overheating and abnormal degradation of the battery packs **100**. In this case, the internal resistance of the battery packs **100** increases according to the usage history (amount of usage, usage period, past temperature) of the battery packs **100**. Therefore, it is possible to detect the usage history of the battery packs **100** instead of the internal resistance of the battery packs **100** and determine the connection of the battery packs **100** on the basis of the detected usage history. The usage history information indicating the usage history of the battery packs **100** is stored in the battery controller **114** of the battery packs **100**. Therefore, the main controller **40** can determine the connection based on the usage history by reading the usage history information from the battery controller **114**.

Specific examples of the present teachings are described above in detail, but these examples are merely illustrative and place no limitation on the scope of the patent claims. The technology described in the patent claims also encompasses various changes and modifications to the specific examples described above.

For example, at least three battery packs **100** may be attached to the power supply device **10**, or a structure capable of receiving a larger number of battery packs **100** can be also used. In this case, the configuration of the connection circuit **60** may be changed according to the number of the attachable battery packs **100**. FIG. **12** shows an example of the connection circuit **60** adapted to six battery packs **100**. In the connection circuit **60**, three battery packs **100** can be connected in series, and electric power can be supplied to an electrical apparatus such as the power tool **200** at a voltage that is three times the output voltage of the battery pack **100**. By contrast with the connection circuit **60** shown in FIG. **2**, the connection circuit **60** shown in FIG. **12** is configured to have two-system medium-potential connection wires **68***a*, **68***b* and use **22** relays **62**.

Further, the power supply devices **10** of the above-described embodiments use rechargeable battery packs **100**, but with the features used in the power supply devices **10**, it is also possible to realize a power supply device that uses non-rechargeable batteries (primary batteries). For example, in the conventional electrical apparatus using a plurality of dry cells, it is recommended that all of the dry cells be replaced at the same time and the mixed use of new dry cells and old dry cells is prohibited. Therefore, even if the user has dry cells which are not new but still usable, it is necessary to purchase anew the entire set of dry batteries necessary for the electric device. By contrast, by using the features of the power supply device **10** described in the present specification, the user can effectively use dry cells which are not new but still usable.

Further, the power supply device **10** of the present embodiments is configured to be separate from the electrical apparatus, but the power supply device **10** may be integrally incorporated in the electrical apparatus.

The technical elements explained in the present specification or drawings provide technical utility either independently or through various combinations. The present teachings are not limited to the combinations described at the time the claims are filed. Further, technologies exemplified in the present specification or drawings are to satisfy multiple objectives simultaneously, and satisfying any one of those objectives gives technical utility to the present teachings.

The invention claimed is:

1. A power supply device that supplies electric power from a plurality of batteries to an electrical apparatus, the power supply device comprising:

a plurality of battery interfaces configured to removably receive at least three batteries including a first battery, a second battery and a third battery, wherein each of the first, second and third batteries includes a positive electrode terminal and a negative electrode terminal;

a connection circuit configured to electrically connect the at least three batteries to each other, wherein the connection circuit is capable of connecting at least two batteries in parallel and connecting at least one other battery to the at least two parallel-connected batteries in series and includes:

a high-voltage conductive line,

a low-voltage conductive line,

a medium-voltage conductive line including a first portion and a second portion,

a first switch configured to electrically and selectively connect the positive electrode terminal of the first battery to one of the high-voltage conductive line or the first portion of the medium-voltage conductive line,

a second switch configured to electrically and selectively connect the positive electrode terminal of the second battery to one of the high-voltage conductive line or the first portion of the medium-voltage conductive line,

a third switch configured to electrically and selectively connect the positive electrode terminal of the third battery to one of the high-voltage conductive line or the first portion of the medium-voltage conductive line,

a fourth switch configured to electrically and selectively connect the negative electrode terminal of the first battery to one of the low-voltage conductive line or the second portion of the medium-voltage conductive line,

a fifth switch configured to electrically and selectively connect the negative electrode terminal of the second battery to one of the low-voltage conductive line or the second portion of the medium-voltage conductive line,

a sixth switch configured to electrically and selectively connect the negative electrode terminal of the third battery to one of the low-voltage conductive line or the second portion of the medium-voltage conductive line, and

a pair of output terminals configured to output electric power from the at least three batteries while the connection circuit electrically connects the at least one other battery to the at least two parallel-connected batteries,

wherein the connection circuit is capable of switching connection state of the at least three batteries among:

a first state connecting the second battery to the third battery in parallel and connecting the first battery to the second and third batteries in series; and

a second state connecting the first battery to the third battery in parallel and connecting the second battery to the first and third batteries in series; and

a third state connecting the first battery to the second battery in parallel and connecting the third battery to the first and second batteries in series.

2. The power supply device as in claim **1**, wherein the connection circuit is capable of changing a combination of

batteries connected in parallel without requiring to change positions of the batteries in the battery interfaces.

3. The power supply device as in claim **1**, further comprising:

a detector configured to detect at least one indicator indicative of a condition of each battery attached to the battery interfaces; and

a processor configured to group the at least three batteries into at least two battery groups such that at least one of the battery groups includes at least two batteries,

wherein the connection circuit is configured to connect batteries grouped in the same battery group in parallel and connect batteries grouped in different battery groups in series.

4. The power supply device as in claim **3**, wherein the detector is configured to detect, as the indicator indicative of a condition of the battery, at least one of:

an amount of electric power remaining in the battery, a voltage of the battery, an internal resistance of the battery, a flowing current of the battery, usage quantity of the battery, a degree of degradation of the battery and a temperature of the battery.

5. The power supply device as in claim **3**, wherein

the detector is configured to detect at least an amount of electric power remaining in each battery, and

the processor is configured to perform the grouping such that a difference in total amounts of electric power between the at least two battery groups becomes minimized.

6. The power supply device as in claim **5**, wherein the processor is configured to:

calculate the differences in the total amounts of electric power between the at least two battery groups for at least two different groupings, and

select either one of the groupings in which the calculated difference is the smallest.

7. The power supply device as in claim **1**, further comprising:

a breaker configured to electrically break the connection circuit during when the connection circuit changes connection of the batteries.

8. The power supply device as in claim **7**, wherein the breaker is configured to be located between two batteries that are connected in series regardless of a manner of the connection of the batteries.

9. The power supply device as in claim **1**, wherein the connection circuit is capable of changing the connection of the at least three batteries based on output voltages of the at least three batteries output while the electric power is supplied from the at least three batteries to the electrical apparatus.

10. The power supply device as in claim **1**, wherein

the connection circuit further includes a breaker (1) disposed on the medium-voltage conductive line, (2) located between the first and second portions of the medium-voltage conductive line, and (3) configured to be capable of breaking an electrical connection between the first and second portions.

11. The power supply device as in claim **1**, wherein the medium-voltage conductive line is configured to be electrically isolated from all the first, second and third batteries when the first, second and third switches electrically connect the respective positive electrode terminal of the first, second and third batteries to the high-voltage conductive line and fourth, fifth and sixth switches electrically connect the respective negative electrode terminal of the first, second and third batteries to the low-voltage conductive line.

* * * * *