US009341359B1

(12) **United States Patent**
Fernandez et al.

(10) **Patent No.: US 9,341,359 B1**
(45) **Date of Patent: May 17, 2016**

(54) **TUBULAR LIGHT EMITTING DIODE LIGHTING DEVICE HAVING SELECTABLE LIGHT OUTPUT**

(71) Applicants: **Jose M. Fernandez**, Sunrise, FL (US); **Gary K. Mart**, Coral Springs, FL (US); **Jeffrey J. Newman**, Coral Springs, FL (US)

(72) Inventors: **Jose M. Fernandez**, Sunrise, FL (US); **Gary K. Mart**, Coral Springs, FL (US); **Jeffrey J. Newman**, Coral Springs, FL (US)

(*) Notice: Subject to any disclaimer, the term of this patent is extended or adjusted under 35 U.S.C. 154(b) by 0 days.

(21) Appl. No.: **14/570,596**

(22) Filed: **Dec. 15, 2014**

(51) **Int. Cl.**

H01Q 1/26	(2006.01)
F21V 23/02	(2006.01)
F21K 99/00	(2016.01)
H05B 33/08	(2006.01)
H05B 37/02	(2006.01)
F21Y 103/00	(2016.01)

(52) **U.S. Cl.**
CPC ***F21V 23/026*** (2013.01); ***F21K 9/17*** (2013.01); ***H05B 33/0809*** (2013.01); ***H05B 37/0272*** (2013.01); *F21Y 2103/003* (2013.01)

(58) **Field of Classification Search**
USPC 315/33, 34, 51; 362/225, 217.1, 217.12, 362/217.13, 249.01, 249.02
See application file for complete search history.

(56) **References Cited**

U.S. PATENT DOCUMENTS

8,455,600	B2	6/2013	Kim et al.	
8,531,109	B2 *	9/2013	Visser	F21V 25/04 315/294
8,907,556	B2	12/2014	Park et al.	
8,907,557	B2	12/2014	Park et al.	
8,919,991	B2	12/2014	Lee et al.	
2013/0234600	A1	9/2013	Park et al.	
2013/0342116	A1	12/2013	Park et al.	
2014/0001970	A1	1/2014	Park et al.	
2014/0084793	A1	3/2014	Park et al.	
2014/0111112	A1	4/2014	Park et al.	
2014/0239827	A1	8/2014	Park et al.	
2014/0346963	A1 *	11/2014	Kang	H05B 33/0818 315/200 R

* cited by examiner

Primary Examiner — Thuy Vinh Tran
(74) *Attorney, Agent, or Firm* — Patents on Demand P.A.; Brian K. Buchheit; Scott M. Garrett

(57) **ABSTRACT**

A tubular LED bulb includes a circuit board include an AC to DC conversion circuit that provides an output DC current at one of several selectable levels when provided with an AC power source. The DC current is routed through a plurality of LEDs at the selected DC current level. The AC to DC conversion circuit operates responsive to a selection circuit that allows a user to select a level corresponding to a desired light output level. The AC to DC conversion circuit allows the tubular LED bulb to be mounted in a conventional fluorescent light fixture, including a ballast, without regard to polarity. In some embodiments the circuit board can include jumper blocks to allow multiple circuit boards to be connected in tandem.

20 Claims, 7 Drawing Sheets

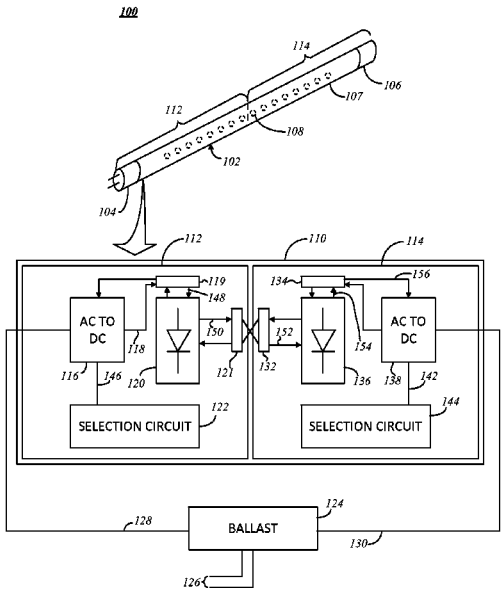

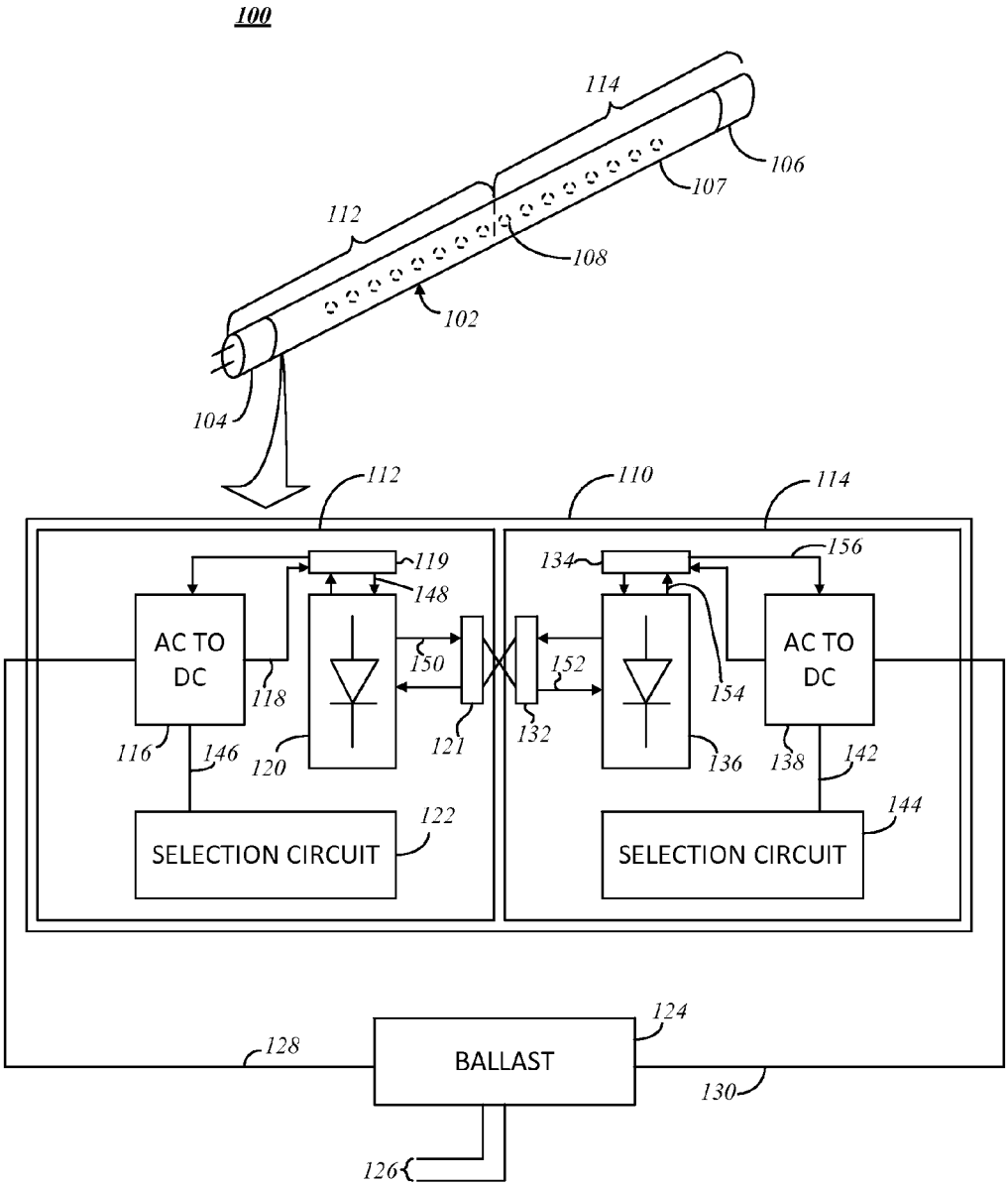
100
114
106
107
112
108
102
104
112
110
114
119
148
134
156
AC TO DC
150
152
154
AC TO DC
118
116
146
120
121
132
136
138
142
122
144
SELECTION CIRCUIT
SELECTION CIRCUIT
124
128
BALLAST
130
126

FIG. 1

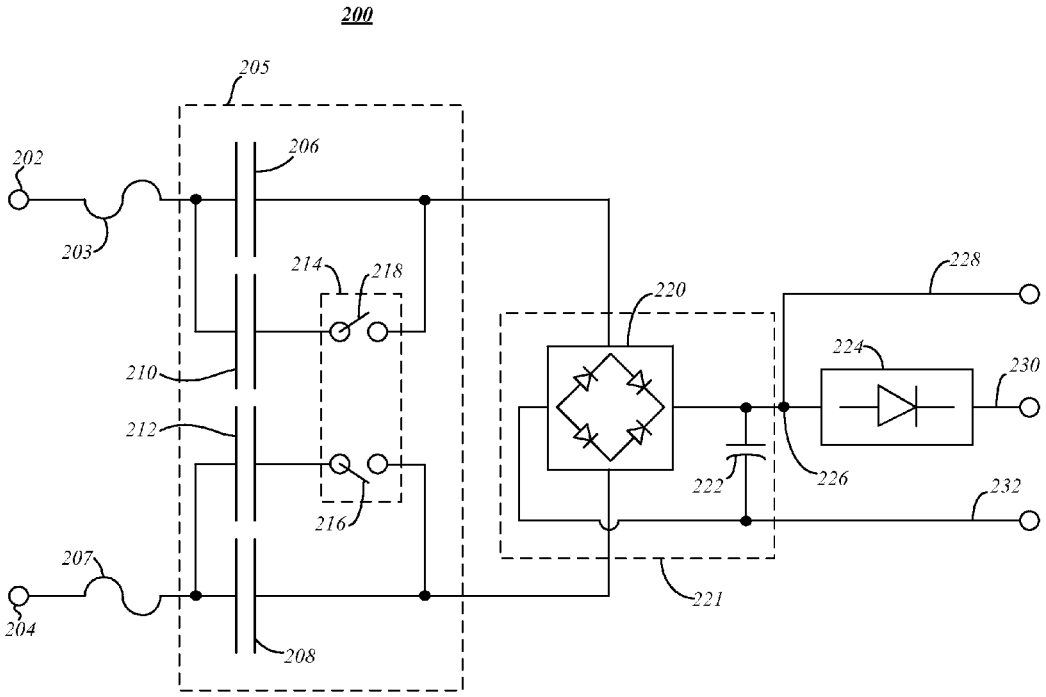
200
205
206
202
203
214
218
220
228
224
230
210
212
222
226
232
216
207
221
204
208

FIG. 2

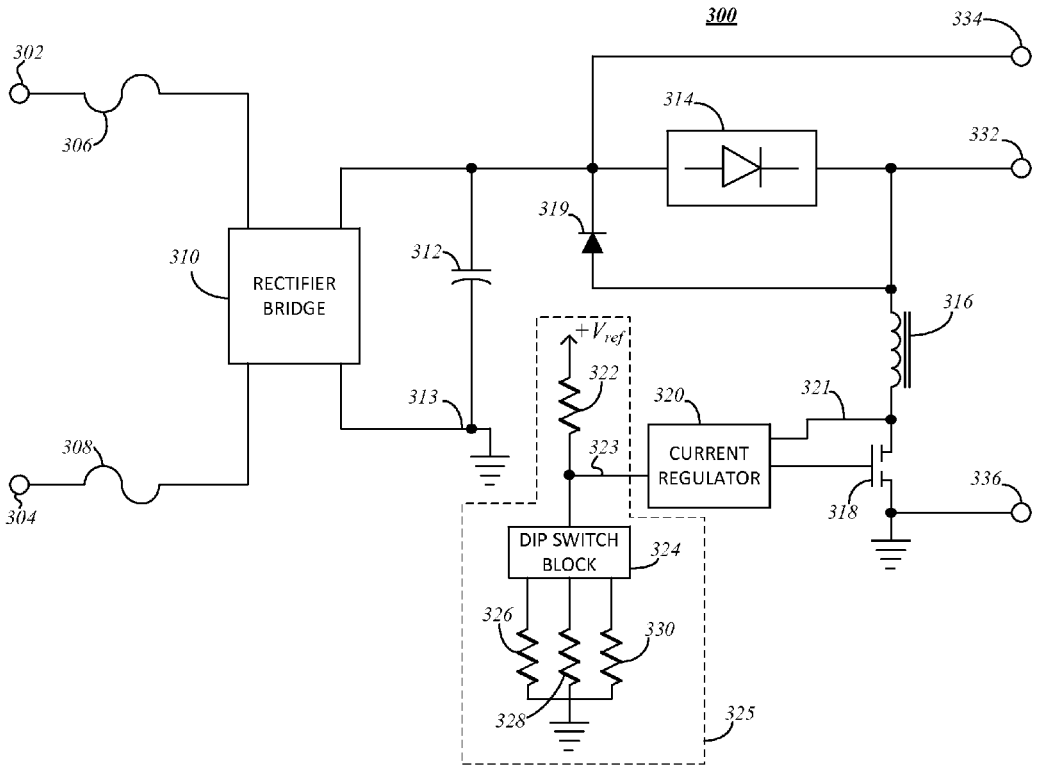
300
302
306
304
308
310
RECTIFIER BRIDGE
312
313
314
319
316
332
334
$+V_{ref}$
322
323
320
CURRENT REGULATOR
321
318
336
DIP SWITCH BLOCK
324
326
328
330
325

FIG. 3

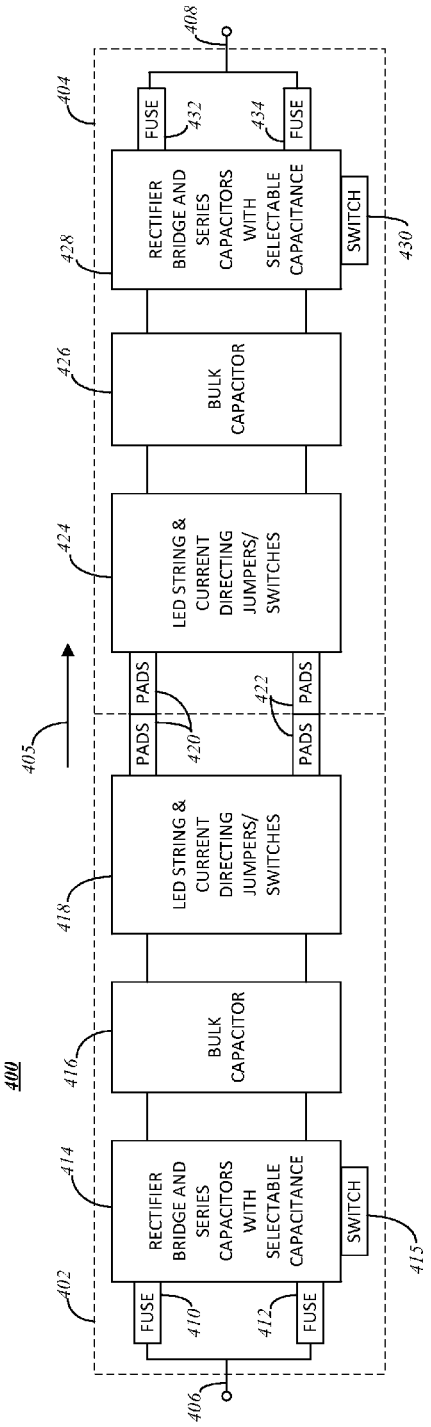
400
402
404
405
406
408
410
412
414
415
416
418
420
422
424
426
428
430
432
434
FUSE
RECTIFIER BRIDGE AND SERIES CAPACITORS WITH SELECTABLE CAPACITANCE
SWITCH
BULK CAPACITOR
LED STRING & CURRENT DIRECTING JUMPERS/ SWITCHES
PADS

FIG. 4

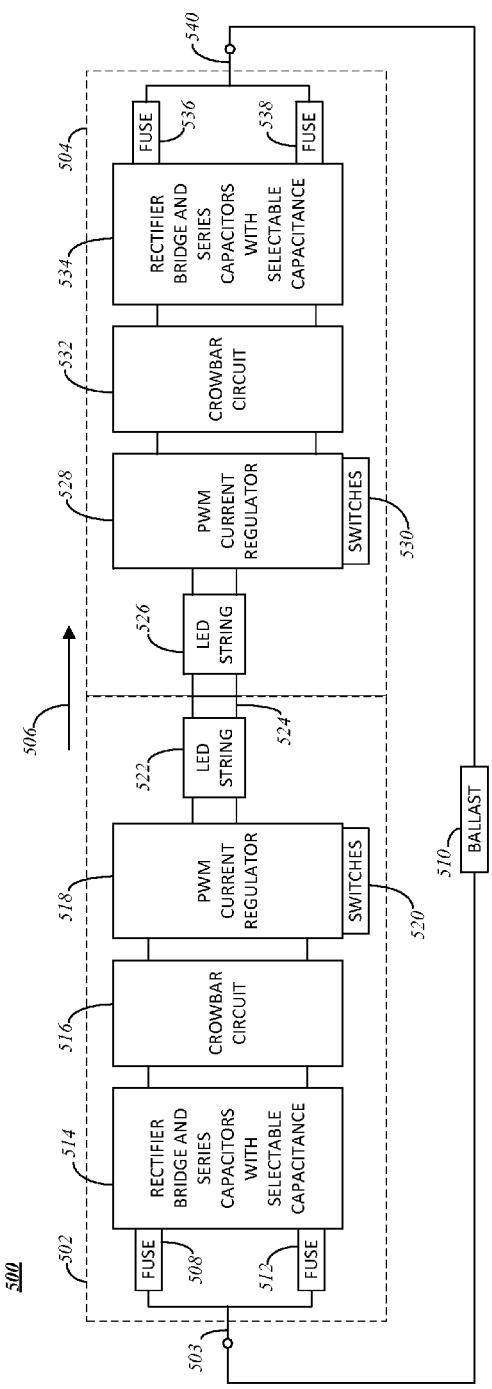
500
502
503
504
506
508
510
512
514
516
518
520
522
524
526
528
530
532
534
536
538
540
FUSE
RECTIFIER BRIDGE AND SERIES CAPACITORS WITH SELECTABLE CAPACITANCE
CROWBAR CIRCUIT
PWM CURRENT REGULATOR
SWITCHES
LED STRING
BALLAST

FIG. 5

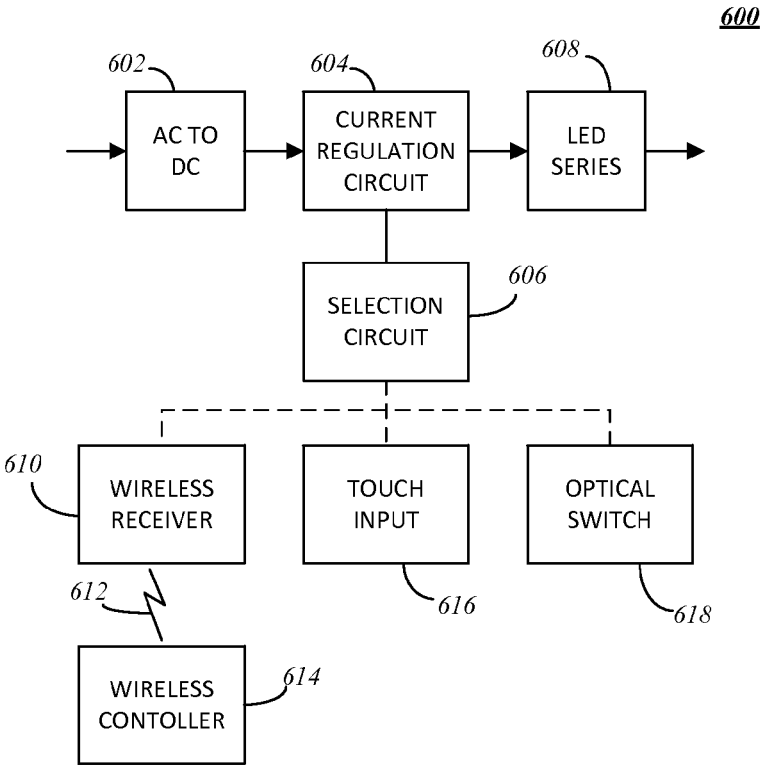
600
602
AC TO DC
604
CURRENT REGULATION CIRCUIT
608
LED SERIES
606
SELECTION CIRCUIT
610
WIRELESS RECEIVER
TOUCH INPUT
OPTICAL SWITCH
612
616
618
WIRELESS CONTOLLER
614

FIG. 6

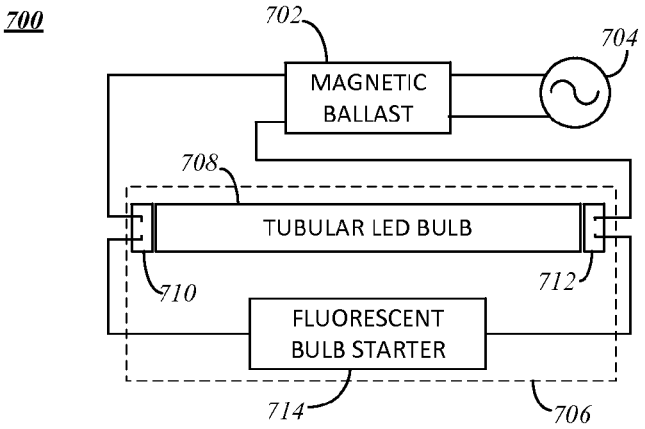
700
702
MAGNETIC BALLAST
704
708
TUBULAR LED BULB
710
712
FLUORESCENT BULB STARTER
714
706

FIG. 7

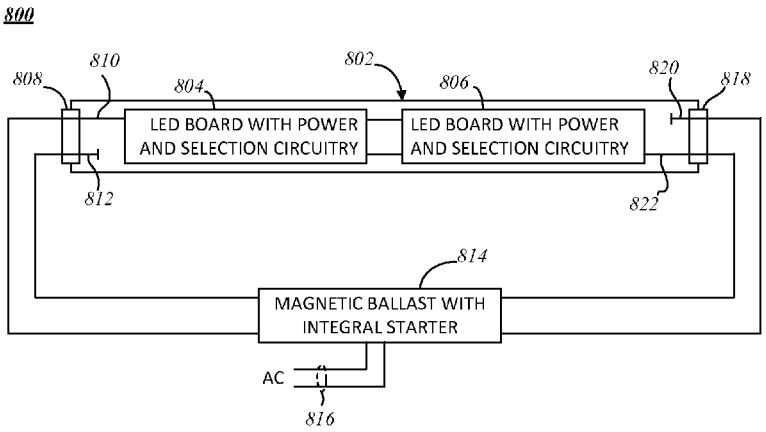
800
808
810
804
802
806
820
818
LED BOARD WITH POWER AND SELECTION CIRCUITRY
LED BOARD WITH POWER AND SELECTION CIRCUITRY
812
822
814
MAGNETIC BALLAST WITH INTEGRAL STARTER
AC
816

FIG. 8

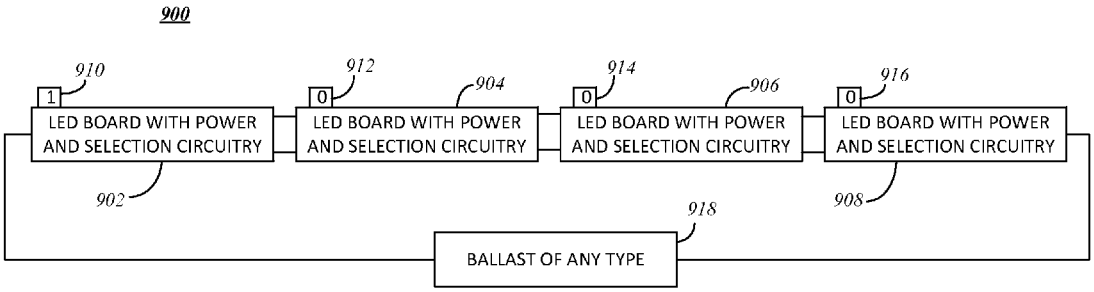
900
910
912
904
914
906
916
1
0
0
0
LED BOARD WITH POWER AND SELECTION CIRCUITRY
LED BOARD WITH POWER AND SELECTION CIRCUITRY
LED BOARD WITH POWER AND SELECTION CIRCUITRY
LED BOARD WITH POWER AND SELECTION CIRCUITRY
902
908
918
BALLAST OF ANY TYPE

FIG. 9

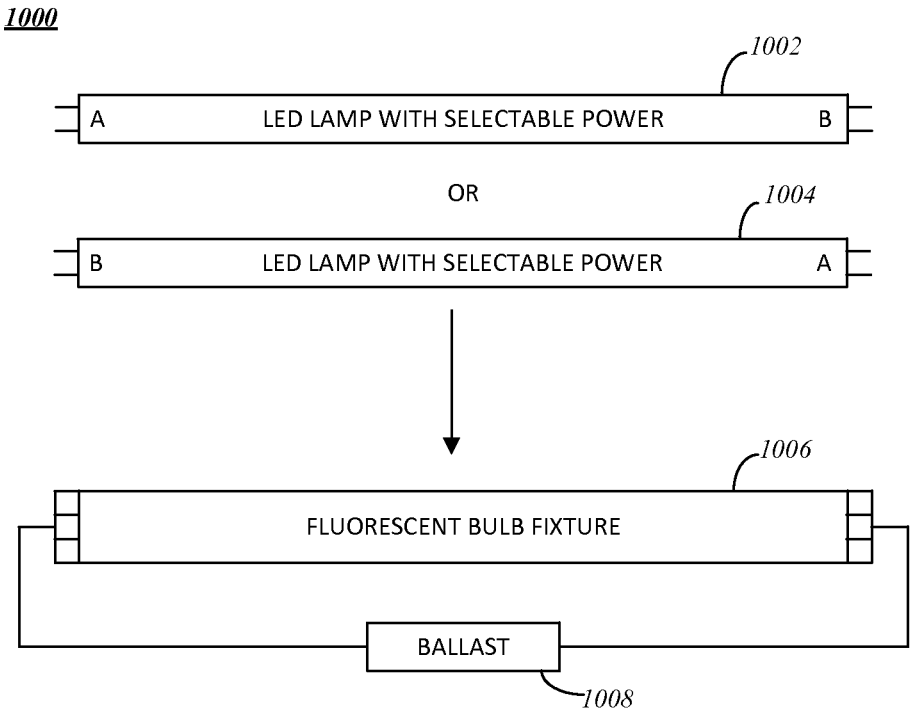
1000
1002
A
LED LAMP WITH SELECTABLE POWER
B
OR
1004
B
LED LAMP WITH SELECTABLE POWER
A
1006
FLUORESCENT BULB FIXTURE
BALLAST
1008

FIG. 10

TUBULAR LIGHT EMITTING DIODE LIGHTING DEVICE HAVING SELECTABLE LIGHT OUTPUT

FIELD OF THE DISCLOSURE

The present disclosure relates generally to lighting devices used to replace conventional fluorescent lighting tubes, and more particularly to light emitting diode (LED) devices used to replace fluorescent bulbs and which are powered by a standard ballast.

BACKGROUND

Fluorescent light bulbs or tubes are in widespread use and are commonly used in commercial and industrial applications. To operate a fluorescent bulb, a ballast is required that converts standard alternating current (AC) electrical service into an AC power signal at a magnitude and frequency higher than commercial AC service which causes ionization of the gas inside the fluorescent tube. While fluorescent tubes are more efficient than incandescent bulbs, they are not as efficient as LED lighting devices in terms of output light versus input electrical power. Accordingly, there has been interest in developing an LED lighting device as a replacement for fluorescent tubes.

One challenge in developing a replacement for fluorescent tubes is the fact that fluorescent tubes are powered by a ballast. The cost of rewiring a fluorescent lighting fixture to bypass a ballast is prohibitive, therefore it is desirable to make a "drop in" replacement that can be powered by an existing ballast. There are several different types of ballasts (i.e. electronic and magnetic) commonly in use, however, each having different electrical output characteristics for pre-heat (with starter), rapid start, program start, semi-resonant, and instant start type fluorescent bulb types. Accordingly, these output characteristic need to be addressed when designing a power conversion circuit for driving LEDs from the ballast. This has led to the development of different LED replacement tube devices for use with different ballast types due to the small area available inside a tube housing designed to house the LEDs and fit within a standardized fluorescent tube configuration. Conventional LED replacement tube lighting device are designed for a specific type of ballast and are not capable of proper operation with a different type of ballast. In some cases the use of LED replacement tubes involves the removal of the ballast, which can represent a significant cost.

Another issue is that fluorescent bulbs generally operate at one light output level because of their design. A threshold current is necessary to support the continued ionization process that results in light. This means that the variability of light output for a particular bulb is not particularly variable, as it is with an incandescent bulb, for example. To reduce light in a commercial or industrial setting some of the bulbs are simply turned off, leaving enough on to produce the desired lower light level. However, this not a suitable solution in applications where there are only one or a small number of tubes for a smaller space being lit. Even with a small number of tubes, turning one or more off can leave dark spots in an area being lit. In commercial or industrial setting the light fixated are typically mounted higher than in, for example, and office setting. The higher mounting allows light to diffuse over a larger are, so even when some bulbs are turned off, the problem of dark spots is mitigated. Conventional LED replacement lighting tube devices are designed in such a way that they output only one light level. Different models are made to output different light (i.e. lumen output) levels, which requires a manufacturer to design, manufacture, and stock different models for different applications and light output level, as well as by different types of ballasts.

Accordingly, there is a need for a LED lighting device that can be powered by any of the standard ballast types, and which can provide a variable light output level while remaining in the standard tube configuration.

BRIEF DESCRIPTION OF THE FIGURES

In the accompanying figures like reference numerals refer to identical or functionally similar elements throughout the separate views, together with the detailed description below, and are incorporated in and form part of the specification to further illustrate embodiments of concepts that include the claimed invention and explain various principles and advantages of those embodiments.

FIG. **1** is tubular light emitting diode (LED) bulb and a block schematic diagram of circuit board arrangement for the tubular LED bulb, in accordance with some embodiments;

FIG. **2** is a detailed circuit schematic diagram for one board of a tubular LED bulb using two boards connected in a tandem arrangement and using input reactance to control current, in accordance with some embodiments;

FIG. **3** is a block schematic diagram for one board of a tubular LED bulb using two boards connected in a tandem arrangement and using variable switched current regulation, in accordance with some embodiments;

FIG. **4** is a block diagram of a tandem arrangement of two boards for a tubular LED bulb using variable input reactance to control current, in accordance with some embodiments;

FIG. **5** is a block diagram of a tandem arrangement of two boards for a tubular LED bulb using variable switching current regulation, in accordance with some embodiments;

FIG. **6** is a block diagram of a remote controlled circuit for controlling current regulation through a tubular LED bulb, in accordance with some embodiments;

FIG. **7** is a block diagram of a tubular LED lamp device in accordance with some embodiments as used in a first conventional fluorescent lighting fixture;

FIG. **8** is a block diagram of a tubular LED lamp device in accordance with some embodiments as used in a second conventional fluorescent lighting fixture;

FIG. **9** is a block diagram of a tubular LED land device using more than two LED circuit board assemblies in tandem to achieve a desired overall length corresponding to a standardized length in accordance with some embodiments; and

FIG. **10** is a tubular LED lamp device designed in accordance with some embodiments showing that the LED lamp device can be installed without regard to orientation in a conventional fluorescent lighting fixture.

Those skilled in the field of the present disclosure will appreciate that elements in the figures are illustrated for simplicity and clarity and have not necessarily been drawn to scale. For example, the dimensions of some of the elements in the figures may be exaggerated relative to other elements to help to improve understanding of embodiments of the present invention.

The apparatus and method components have been represented where appropriate by conventional symbols in the drawings, showing only those specific details that are pertinent to understanding the embodiments of the present invention so as not to obscure the disclosure with details that will be readily apparent to those of ordinary skill in the art having the benefit of the description herein. The details of well-known elements, structure, or processes that would be necessary to practice the embodiments, and that would be well known to

those of skill in the art, are not necessarily shown and should be assumed to be present unless otherwise indicated.

DETAILED DESCRIPTION

In various embodiments a light emitting diode (LED) device is configured in a tubular form as a replacement for similarly tubular fluorescent bulbs. Some embodiments include a LED assembly configured to be powered by a ballast. The LED assembly can include an alternating current (AC) to direct current (DC) conversion circuit that converts the output of the ballast to a selected DC current level. The LED assembly further includes a plurality of LEDs electrically coupled to the AC to DC conversion circuit and powered by the selected DC current. The LED assembly can further include a selection circuit coupled to the AC to DC conversion circuit which has a plurality of selection states, where each selection state causes the AC to DC conversion circuit to output the selected DC current at a different corresponding level. The LED assembly further includes a tubular housing that entirely conforms to the shape of a standard fluorescent tube, and which houses the AC to DC conversion circuit, plurality of LEDs, and the selection circuit.

FIG. **1** is tubular light emitting diode (LED) bulb **102** and a block schematic diagram of circuit board arrangement for the tubular LED bulb **102**, in accordance with some embodiments. The tubular LED bulb **102** includes a plurality of LEDs **108** and can be physically configured to fit into a standardized fluorescent bulb socket that is driven by a fluorescent bulb ballast **124** which is connected to a commercial AC source (e.g. 110 or 220 VAC). Although there are a variety of ballast types deployed in various industrial and commercial applications, the tubular LED bulb **102** is designed such that it will operate with any of the standardized ballast types commonly used in such commercial and industrial applications, and is therefore a replacement option for such deployed systems without requiring separate designs for each different ballast type. Accordingly the tubular LED bulb **102** includes end caps **104**, **106** which include electrodes that make electrical contact with electrical connectors in a fluorescent bulb fixture, and which also physically retain fluorescent bulbs and the tubular LED bulb **102**. In general the LEDs **108** are arranged in a line along the length of the tubular LED bulb in the tubular housing **107**. The tubular housing **107** includes transparent or translucent material through which light from the LEDs pass into the ambient space. In some embodiments the LEDs **108** and circuitry for powering the LEDs **108** can be disposed on a single circuit board housed in the tubular LED bulb **102**, and in some embodiments the LEDs **108** can be disposed on multiple circuit boards that are connected in tandem (i.e. electrically in series) along the length of the tubular LED bulb **102**. In the present example two circuit boards are connected in tandem. The circuit boards can have identical designs, but are configured differently where one board regulates power and the DC current to drive the LEDs and a second board is configured such that DC current from the first board passes through LEDs on the second board, and portions of the circuitry on the second board can be bypassed as they are not needed. Electricity is provided to the tubular LED bulb **102** from the ballast **124**. The power provided by the ballast **124** is processed by circuitry **110** in the tubular LED bulb **102** to power a plurality of LEDs **108**. The electrical current passing through the LEDs **108** can be varied or selected by a user in order to control the light output of the tubular LED bulb **102**.

The circuitry **110** includes a first circuit board **112** and a second circuit board **114** that can include substantially identical circuitry components, and are connected in a tandem arrangement. As shown here, the electrical block diagrams for boards **112**, **114** are shown, and their position in the tubular housing **107** of the tubular LED bulb **102** are indicated. Although the first and second circuit boards **112**, **114** may include identical circuitry and components, they are configured differently via the configuration of connections in jumper blocks **119**, **121**, **132**, **134**, which use zero Ohm jumpers between selected electrodes to configure paths as illustrated. Alternatively, the jumper blocks **119**, **121**, **132**, **134** can be replaced by switch arrays equivalently. Accordingly, the ballast **124** connects to an input/output of the first circuit board **112** and to a corresponding input/output of the second circuit board **114**, wherein, in the present example, a DC current generally flows from left to right, as shown, from the first circuit board **112** to the second circuit board **114**. The ballast provides only an AC voltage, and current provided by the ballast can flow in a rectified manner, as will be explained.

Each of the first and second circuit boards **112**, **114**, include an alternating current (AC) to direct current (DC) block **116**, **138**, respectively. The AC to DC block **116** on the first circuit board **112** converts the AC power provided by the ballast **124** into a DC current on path **118** through rectification and bulk capacitor filtering, as is well known. The resulting DC current is passed through a first jumper block **119** that is configured to route the DC current through a plurality of LEDs **120**, though path **148**. As the DC current passes through the LEDs **120** of the first circuit board **112**, the DC current passes through a second jumper block **121** via path **150**. The second jumper block **121** is connected to a corresponding jumper block **132** on the second circuit board **114** via a suitable electrical connection. The unused paths in or out of jumper blocks **119**, **121** are disabled (i.e. disconnected). Jumper block **132** is configured to route the DC current along path **152** into a plurality of LEDs **136** of the second circuit board **114**. Jumper block **134** is configured to provide a path **154** for the DC current to exit the plurality of LEDs **136** to the AC to DC converter circuit **138** along path **156**. The current entering the AC to DC conversion circuit **138** from path **156** can exit the AC to DC conversion circuit **138** though a rectifier bridge of the AC to DC conversion circuit, as is known. The unused paths of jumper blocks **132**, **134** are disconnected. Thus, by appropriate configuration of jumper blocks **119**, **121**, **132**, and **134**, the first circuit board **112** can generate a DC current and pass it through the LEDs **120** of the first circuit board **112**, and direct the DC current to the second circuit board **114** in such a way that, as facilitated by the configurations of jumper blocks **132**, **134**, the DC current will also pass through the LEDs **136** of the second circuit board **114**, and exit the second circuit board **114** and return on half cycles of the AC signal provided by the ballast **124**.

The current regulation is controlled by a selection circuit **122**, which can be manually or remotely controlled. The second circuit board **114** can also include a selection circuit **144**, which may not be used when the first circuit board **112** is configured to regulate the DC current. The selection circuit **122** determines the amount of DC current output by the AC to DC conversion circuit **116**, and allows a user to configure the tubular LED bulb **102** to output a selected light output level. The circuit boards **112**, **114** can both include all the necessary circuitry to regulate current through the LEDs using power provided by the ballast **124**, but can be configured to either regulate the DC current or simply allow the DC current to pass through it.

The ballast **124** provides an AC signal between a first line **128** and a second line **130**, and is powered by a commercial AC source **126**. The AC signal provided by the ballast is

adapted to drive a standard fluorescent bulb. The ballast can be any one of the known ballast types. Since the signal provided by the ballast **128** is an AC signal, the orientation of the first and second lines **128**, **130** does not matter. First line **128** can be the "line" voltage and the second line **130** can be the "common," or vice versa. From the perspective of the first and second circuit boards **112**, **114**, the orientation of the first and second lines **128**, **130** is irrelevant.

Accordingly, the design of circuit boards **112**, **114** provide the benefit of being operable with any of the several varieties of presently deployed lighting ballasts that are designed to drive fluorescent bulbs, thereby obviating the need to rewire existing fluorescent bulb fixtures, or design different LED bulb circuits to work with each type of ballast. Although shown here using two circuit boards **112**, **114**, the second circuit board **114** could be eliminated, and the second line **130** of the ballast could be connected directly to jumper block **121**. However, in order to provide the necessary light output, all of the LEDs **136** would have to added to circuit board **112**. In some embodiments using two identical, but differently configured boards **112**, **114** provides a manufacturing advantage. In designing the layout of the boards **112**, **114**, the jumper blocks **119**, **121**, and **132**, **134** can be located so as to face an end cap (i.e. **104**, **106**, respectively) so as to facilitate easy access by removal of an end cap. Once the respective jumper blocks are appropriately configured, the end cap or end caps can be replaced on the tube body **107**.

FIG. **2** is a detailed circuit schematic diagram for one board **200** of a tubular LED bulb that can use two such boards connected in a tandem arrangement in accordance with that shown in FIG. **1**, and using input reactance to control current, in accordance with some embodiments. The circuit board **200** has AC inputs **202**, **204** that connect to one line of a ballast (e.g. "line"). Each input **202**, **204** can be protected by a respective fuse **203**, **207**. Input series capacitors **206**, **208** present an amount of reactance to the AC signal provided by the ballast, and serve to regulate the current from the ballast to a first level corresponding to the reactance provided by the input series capacitors **206**, **208**. Additional capacitors **210**, **212** are switchably connectable in parallel with input series capacitors **206**, **208**, respectively, to reduce the series reactance, which allows more current to flow from the ballast when switched in parallel, thus increasing the current from the ballast. Switches **218**, **216** are configured in together (i.e. both are open or both are closed) to selectably connect capacitors **210**, **212** in parallel with capacitors **206**, **208**, respectively, to change the current level that is received from the ballast. Switches **216**, **218** can be manually operated or remotely operated in a switch block **214**, and can be zero Ohm jumpers in some embodiments. The capacitors **206**, **208**, **210**, **212** and switches **216**, **218** act as a selection circuit **205** which can be a selection circuit such as selection circuit **122** of FIG. **1**. By having two inputs **202**, **204**, the power from the ballast is split between the inputs, which allows the capacitors **206**, **208**, **210**, **212** to be smaller than if only two capacitors in a single input configuration are used, which facilitates selection of capacitor components to fit inside the tubular housing of the tubular LED bulb. Of course, in some embodiments where power is less a consideration, a single input configuration (i.e. input **202**, capacitors **206**, **210**, and switch **218**) can be used without need for the second input **204** and its capacitors.

The AC current passing through the selection circuit **205** is applied to an AC to DC conversion block **221** that can include a full wave rectifier bridge **220** and a bulk filter capacitor **222**. Thus, the voltage across the bulk filter capacitor **222** has a substantial DC component, and DC current passes through the plurality of LEDs **224**. As the current leaves the LEDs **224** it can be, in some embodiments, directed through a connector **230** into a second board connected in a tandem arrangement.

The connector **230** can connect the output of LEDs **224** (i.e. the current passing through the LEDs **224**) to a connector on a tandem-connected board that directs the current to a node that corresponds with node **226** to pass the current through the LEDs on the tandem-connected board in the forward direction. Conversely, if the board **200** is the tandem-connected board, then current will come through connector **228** to node **226**, and connector **230** will be connected to ground **232** to allow the current to pass through the rectifier bridge **220** and through the selection circuit **205** to return to the ballast. It will be appreciated by those skilled in the art that circuit board **200** can be used alone, rather than in a tandem configuration with another board, provided a sufficiently number of LEDs **224** can be mounted on the board **200** for a given application. Whether in a tandem configuration or a solo configuration, the orientation with regard to the ballast output is irrelevant, and the board can be connected in either polarity.

FIG. **3** is a block schematic diagram for one board **300** of a tubular LED bulb in accordance with some embodiments. In some embodiments the tubular LED bulb can use two or more boards such as board **300** connected in tandem and appropriately configured. The board **300** includes circuitry for variable switched current regulation in powering the LEDs of the tubular LED bulb, and is bi-directional so that it can be mounted in a fluorescent bulb fixture without regard for orientation or the type of ballast providing power to the fluorescent light fixture.

AC voltage from a ballast is provided at AC inputs **302**, **304** and passes through fuses **306**, **308** that can be used to prevent excessive current through the board **300**. Given the configuration of fluorescent light fixtures, the receptacle in which the terminals of the tubular LED bulb are mounted may provide a connection to the ballast at only one of terminals **302**, **304**, leaving the other terminal unconnected. AC to DC conversion is performed by a full wave bridge rectifier block **310** and a bulk filter capacitor **312** to produce a DC voltage across the bulk filter capacitor **312** with respect to the DC ground **313**. DC current from the bulk filter capacitor **312** passes through a plurality of LEDs **314** and is regulated by a switched mode current regulator **320** that switches current through an inductor **316** by operation of a switch **318** (i.e. a transistor) to load the inductor **316** (i.e. energy storage in the magnetic field of the inductor **316**). A free wheel diode **319** maintains current flow through the LEDs when the switch **318** is closed and the inductor **316** unloads (i.e. produces current as its magnetic field collapses).

A selection circuit **325** allows a user to adjust the current through the LEDs **314** by adjusting a level of a reference signal **323** used by the switched mode regulator **320** to control current through the LEDs **314**. Current can be sensed via line **321** during the on state of switch **318**. In some embodiments the reference signal **323** can be controlled by a selectable voltage divider comprised of an upper resistor **322** and two or more lower resistors **326**, **328**, **330** which divide a reference voltage V_{ref} to produce the reference signal **323**. A series of switches in a dual inline package (DIP) switch block **324** are connected in series with each lower resistor **326**, **328**, **330**, respectively, to control whether each resistor **326**, **328**, **330** is connected in series with the upper resistor **322** to adjust the reference signal **323**. The switches in the DIP switch block **324** can be manually switched in some embodiments, or alternatively they can be transistor switches.

As with the embodiments represented in FIG. **2**, the DC current through the LEDs **314** can be provided to a tandem-

connected board to power the LEDs of the tandem-connected board at the same current level. The output of the LEDs at terminal **332** can be provided to a similar board to board **300**. As an example, assume that board **300** is the second board in a tandem-connected arrangement. The current from the output of the LEDs of the first board (e.g. at terminal **332** of the first board) is then provided to terminal **334**, and, on the tandem-connected board, terminal **332** and the DC ground at terminal **336** are connected together, resulting in current entering the tandem-connected board at terminal **334**, passing through the LEDs **314**, and through terminals **332**, **336** (which would be configured as shorted together). The current returns to the ballast though the rectifier block **310** and one or both of terminals **302**, **204**. Since the

FIG. **4** is a block diagram of a tandem arrangement **400** of two boards **402**, **404** for a tubular LED bulb using variable input reactance to control current, in accordance with some embodiments. The arrangement **400** can represent two boards configured in accordance with embodiments of FIG. **2** that are connected in a tandem arrangement. Accordingly, there is a first board **402** and second board **404** which can include substantially identical circuitry in some embodiments, and can be connected in a tandem configuration, physically. While the boards **402**, **404** can have an identical layout and include identical circuitry components, by use of the jumper blocks (e.g. jumper blocks **119**, **121**, **132**, **134** of FIG. **1**), the boards **402**, **404** can be configured to have different electrical operation. In general, DC current passes through the boards in the direction of arrow **405**. Electrically, the current is steered through connectors into the second board **404** from the first board **402** so that the current goes in the forward direction through the LEDs of the second board **404**.

AC power is provided from a ballast that is connected across input/output **406** of the first board **402** and an input/output **408** of the second board **404**. Fuses **410**, **412** on the first board **402**, and fuses **432**, **434** of the second board **404** protect against excessive current conditions. A full wave bridge rectifier and capacitor block **414** performs AC to DC conversion, and include input reactance capacitors and switches in accordance with selection circuit **205** of FIG. **2**. The second board **404** likewise has an AC to DC conversion block **428** that is substantially the same as AC to DC conversion block **414** of the first board **402**. A switch selector **415** adjusts the input reactance of the AC to DC conversion block **414** on the first board **402**. A similar arrangement is present on the second board **404** by switch selector **430**. Each board **402**, **404** uses a bulk filter capacitor **416**, **426**, respectively. Current is output from the bulk filter capacitor **416** to a string (i.e. series connected) LEDs **418** on the first board **402**. Current passing through LEDs **418** is fed, through appropriately configured jumpers or switches or equivalent components, to the second board **404** through connector pads **420**, **422** to pass through LEDs **424** on the second board **404**. The second board **404** likewise comprises appropriate jumpers or equivalent components to direct the current from the first board **402** through the LEDs **424** in the forward direction. Accordingly, each of the first and second boards **402**, **404** comprise components to steer current through its respective group of series connected LEDs, and through its other circuitry such as the AC to DC block, to return to the ballast when connected in a tandem connected configuration such as the second board **404**. Since the ballast output is AC across terminals **406**, **408**, the orientation in which the tubular LED bulb including the tandem arrangement **400** is mounted in the fluorescent lighting fixture is irrelevant.

FIG. **5** is a block diagram of a tandem arrangement **500** of two boards for a tubular LED bulb using variable switching current regulation, in accordance with some embodiments. The arrangement **500** can represent two boards configured in accordance with embodiments of FIG. **3** that are connected in a tandem arrangement, with each board configured electrically appropriate for its position in the tandem arrangement **500**. Accordingly, there is a first board **502**, and second board **504** which can include identical, but differently configured circuitry, and can be connected in a tandem configuration with board **502**. In general, DC current passes through the boards in the direction of arrow **506**. Electrically, the current is steered through connectors into the second board **504** from the first board **502** so that the current goes in the forward direction through the LEDs of the second board **504**.

Power from a ballast **510** is applied to the input/outputs **503**, **540** of the two boards **502**, **504**, respectively. Fuses **508**, **512**, **536**, **538** prevent excess current from passing through the boards **502**, **504**. The AC power from the ballast is converted to DC by a full wave bridge rectifier and bulk capacitor block **514**. The DC output of block **514** can be regulated by a crowbar circuit **516** to prevent excessive voltage output from block **514**. A switched mode current regulator **518** controls and regulates current through LEDs **522**. The switched mode regulator **518** is responsive to a input reference controlled, for example, by switches **520**, which can adjust a reference level (e.g. reference **323** of FIG. **3**) used by the switched mode current regulator **518** so that the current through the LEDs can be varied as desired by a user. The second board **504** likewise contains a plurality of LEDs **526**, through which current from the first board **502** is directed by conductors in a connector **524**, and appropriate current steering jumpers, switches, or other components on the second board **504**. The second board **504** likewise includes a switched mode current regulator **528** that can be controlled by selection switches **530**, and can further include a crowbar circuit **532**, and a AC to DC conversion block **534**. However, when the second board **504** is connected in a tandem arrangement **500** as shown, the first board **502** performs current regulation, and the second board is configured only to steer DC current from the first board through the LEDs **526**, and return to the ballast through the rectifier of block **534**. Again, since the output of the ballast **510** is applied across terminals **503**, **540**, the orientation of the boards with respect to the output of the ballast **510** is irrelevant and a tubular LED bulb using the tandem arrangement **500** can be oriented in either direction in a fluorescent light fixture.

FIG. **6** is a block diagram of a remote controlled circuit **600** for controlling current regulation through a tubular LED bulb, in accordance with some embodiments. The circuit **600** shows one board that can be used alone, or connected in a tandem configuration to form a complete lighting circuit for a tubular LED bulb that can be used to replace fluorescent bulbs, and which will fit into existing fluorescent bulb fixtures that are powered by any of several commonly used ballast types.

An AC to DC block **602** produces DC from the AC power provided by a ballast. The DC current level is regulated by a current regulation block **604**, which is variable and can provide different, selectable levels of current. The selected DC current output by the current regulation block **604** is provided to a series of LEDs **608** to produce a level of light output in correspondence with the selected DC current level output. The DC current selection is controlled, for example, by uses of switches **606** that control the current regulation circuit **604**. For example, the selection circuit can configure an input series capacitance to select different input reactance in some embodiments. In some embodiments the selection circuit **606** can configure a reference level to a switched mode current

regulator, or other such current regulating circuit. The switches **606** are operated responsive to a control circuit. The control circuit can be one of a wireless receiver **610**, a touch switch **616**, an optical switch **618**, or other means of selecting different current levels. Only one of the wireless receiver, touch switch **616**, or optical switch **618** need be present, but more than one of them can be present to allow for different modes of control input if desired.

The wireless receiver **610** can operate using radio signals, acoustic signal, or light signals. A remote controller **614** provides a control signal **612** in an appropriate wireless media to cause the wireless receiver **610** to adjust the switches **606** in accordance with the control signal **612** to select the corresponding DC current output level of the current regulator circuit **604** for the desired light output of the LEDs **608**. The wireless receiver **610** can be, for example, an infrared receiver in some embodiments. In some embodiments the wireless receiver can be a radio receiver. In particular, the wireless receiver **610** can be configured to operate using known radio networking protocols, such as, for example, those specified by the Institute of Electrical and Electronics Engineers (IEEE) specifications nos. 802.11 or 802.15, which include protocols known commonly as "Wi-Fi," "Bluetooth," and "Zigbee." The touch input **616** can be a sequential switching circuit where a received touch or other tactile input can cycle selection circuit **606** through different adjustment levels corresponding to different DC current, and therefore LED light output, levels. The optical switch **618** can receive light input to cause adjustment of the selection circuit to a desired level.

FIG. **7** is a block diagram of a tubular LED bulb system **700**, in accordance with some embodiments, as used in a first conventional fluorescent lighting fixture **706**. The fixture **706** includes electrodes **710**, **712**, between which a tubular bulb is installed. The fixture **706** can be designed to accept a standardized fluorescent bulb between electrodes **710**, **712**. A tubular LED bulb **708** can be mounted in the fixture between electrodes **710**, **712**, where the tubular LED bulb **708** can be designed in accordance with embodiments exemplified in FIGS. **1-6**. The particular fixture **706** is powered by a magnetic ballast which operates in conjunction with a fluorescent bulb starter **714** in the lighting fixture **706**. In a conventional fluorescent bulb, the electrodes **710** connect to filaments in the fluorescent bulb. To start a fluorescent bulb, the filaments are heated by the AC current passing through them and then through the starter **714**, causing ionization inside the fluorescent bulb until the bulb turns on. Upon turning on, electrodes in the fluorescent bulb electrically open, thereby disconnecting from the starter **714**. The tubular LED bulb **708**, however, does not require heating up, and can be an "instant on" bulb. The output of the magnetic ballast **702** is generally at the same frequency as the commercial AC service **704** used to power the magnetic ballast **702**, but the magnetic ballast, though a magnetic transformer, adjusts the voltage level. Accordingly, the tubular LED bulb **708** is designed to operate at the voltage level output form the magnetic ballast **702**. Once the magnetic ballast **702** is turned on, the tubular LED bulb comes on as well, at the selected light output level.

A modern alternative to the magnetic ballast is an electronic ballast. Electronic ballasts produce an AC voltage that is substantially higher than that of commercial AC service, and can sense when a fluorescent lamp ignites (and experiences a resistive drop in load), and control current accordingly. The tubular LED bulb **708** does not produce a resistance drop. Therefore the design of the tubular LED bulb allows it to operate in fixtures both with electronic and magnetic ballasts, and with and without external starters.

FIG. **8** is a block diagram of a tubular LED bulb **802**, in accordance with some embodiments, as used in a second conventional fluorescent lighting fixture. In some conventional fluorescent bulb fixtures, the bulb starter can be incorporated into the magnetic ballast **814**. The ballast **814** is powered by a commercial AC service **816**, and provides an AC voltage to electrodes **808**, **818**, in which the tubule LED bulb **802** is mounted. In some fixtures the electrodes **808**, **818** are polar, meaning that have two sides that are each wired to a different polarity of the AC output of the ballast **814**. However, the tubular LED bulb only connects to one side each electrode **808**, **818**, at **810**, **820**, respectively. The other sides **812**, **822** of the electrodes **808**, **818** are unterminated or unconnected. Inside the tubular LED bulb **802** there can be a first board **804** and a second board **806** that is connected in tandem with the first board **804**, as exemplified by embodiments such as those illustrated in FIGS. **1-6**. Thus, the tubular LED bulb **802** has a selectable light output and can be placed in the fluorescent light fixture without regard for orientation.

FIG. **9** is a block diagram of a tubular LED bulb **900** using more than two LED circuit board assemblies in tandem to achieve a desired overall length corresponding to a standardized length in accordance with some embodiments. Fluorescent bulbs are standardized in both 4 foot and 8 foot lengths, among other standardized lengths. It is contemplated that a circuit board can be designed to include all the necessary circuitry to operate as a "stand alone" board, but also such that it can be configured to operate in a tandem configuration where some of the circuitry is essentially disabled an unnecessary while configured to operate in a tandem configuration. As such, in a 4 foot tubular LED bulb two boards can be used that connected in a tandem configuration. For an 8 foot bulb configuration, then, a tubular LED bulb can use 4 such boards. Accordingly, the tubular LED bulb **900** includes a first board **902**, a second board **904**, a third board **906**, and a fourth board **908**. The first board is configured to regulate current, as indicated by the "1" configuration state **910**. The other boards **904**, **906**, **908** all have a ")" configuration state **912**, **914**, **916**, respectively indicating that these boards **904**, **906**, **908** are configured to receive current and steer the current through their respective LEDs, but they are not converting the AC voltage provided by the ballast **918** into the DC current (which is performed by the first board **902**). The boards **904**, **906**, and **908** can be connected, for example, the way board **114** of FIG. **1** is configured.

FIG. **10** is a tubular LED bulb **1000** designed in accordance with some embodiments showing that the LED bulb **1000** can be installed without regard to orientation in a conventional fluorescent lighting fixture. The bulb **1000** is shown in two different orientations. In a first orientation **1002** the "A" side is on the left and the "B" side is on the right. In the second orientation **1004**, the bulb **1000** is oriented in the reverse of the first orientation. The bulb **1000** can be placed into the fluorescent light fixture **1006** in either the first orientation **1002** or the second orientation **1004**, and it will function the same while powered by the ballast **1008**.

Embodiments in accordance with the disclosure therefore provide the benefits of being able to be powered by any of the several types of ballasts commonly employed in fluorescent lighting fixtures, as well as having selectable light output, and also using a single board design that can be connected in a tandem configuration, which avoids the necessity of designing different boards for different fixture types.

In the foregoing specification, specific embodiments have been described. However, one of ordinary skill in the art appreciates that various modifications and changes can be made without departing from the scope of the invention as set

forth in the claims below. Accordingly, the specification and figures are to be regarded in an illustrative rather than a restrictive sense, and all such modifications are intended to be included within the scope of present teachings.

The benefits, advantages, solutions to problems, and any element(s) that may cause any benefit, advantage, or solution to occur or become more pronounced are not to be construed as a critical, required, or essential features or elements of any or all the claims. The invention is defined solely by the appended claims including any amendments made during the pendency of this application and all equivalents of those claims as issued.

Moreover in this document, relational terms such as first and second, top and bottom, and the like may be used solely to distinguish one entity or action from another entity or action without necessarily requiring or implying any actual such relationship or order between such entities or actions. The terms "comprises," "comprising," "has", "having," "includes", "including," "contains", "containing" or any other variation thereof, are intended to cover a non-exclusive inclusion, such that a process, method, article, or apparatus that comprises, has, includes, contains a list of elements does not include only those elements but may include other elements not expressly listed or inherent to such process, method, article, or apparatus. An element proceeded by "comprises . . . a", "has . . . a", "includes . . . a", "contains . . . a" does not, without more constraints, preclude the existence of additional identical elements in the process, method, article, or apparatus that comprises, has, includes, contains the element. The terms "a" and "an" are defined as one or more unless explicitly stated otherwise herein. The terms "substantially", "essentially", "approximately", "about" or any other version thereof, are defined as being close to as understood by one of ordinary skill in the art, and in one non-limiting embodiment the term is defined to be within 10%, in another embodiment within 5%, in another embodiment within 1% and in another embodiment within 0.5%. The term "coupled" as used herein is defined as connected, although not necessarily directly and not necessarily mechanically. A device or structure that is "configured" in a certain way is configured in at least that way, but may also be configured in ways that are not listed.

It will be appreciated that some embodiments may be comprised of one or more generic or specialized processors (or "processing devices") such as microprocessors, digital signal processors, customized processors and field programmable gate arrays (FPGAs) and unique stored program instructions (including both software and firmware) that control the one or more processors to implement, in conjunction with certain non-processor circuits, some, most, or all of the functions of the method and/or apparatus described herein. Alternatively, some or all functions could be implemented by a state machine that has no stored program instructions, or in one or more application specific integrated circuits (ASICs), in which each function or some combinations of certain of the functions are implemented as custom logic. Of course, a combination of the two approaches could be used.

The Abstract of the Disclosure is provided to allow the reader to quickly ascertain the nature of the technical disclosure. It is submitted with the understanding that it will not be used to interpret or limit the scope or meaning of the claims. In addition, in the foregoing Detailed Description, it can be seen that various features are grouped together in various embodiments for the purpose of streamlining the disclosure. This method of disclosure is not to be interpreted as reflecting an intention that the claimed embodiments require more features than are expressly recited in each claim. Rather, as the following claims reflect, inventive subject matter lies in less than all features of a single disclosed embodiment. Thus the following claims are hereby incorporated into the Detailed Description as part of the original disclosure, and remain so even if cancelled from the claims during prosecution of the application, with each claim standing on its own as a separately claimed subject matter. Furthermore, subject matter not shown should not be assumed to be necessarily present, and that in some instances it may become necessary to define the claims by use of negative limitations, which are supported herein by merely not showing the subject matter disclaimed in such negative limitations.

We claim:

1. A variable output light emitting diode (LED) assembly configured to be powered by a ballast, comprising:

an alternating current (AC) to direct current (DC) conversion circuit configured to convert the output of the ballast to a selected DC current level;

a plurality of LEDs electrically coupled to the AC to DC conversion circuit and powered by the selected DC current, wherein the plurality of LEDs is divided between a first board and a second board, wherein the first and second boards are electrically connected in series between end cap electrodes of the tubular housing, and wherein the first and second boards are configured such that the variable output LED assembly can placed into a fluorescent light fixture without regard for orientation of the of the variable output LED assembly between electrodes of the fluorescent light fixture;

a selection circuit coupled to the AC to DC conversion circuit and having a plurality of selection settings, where each selection setting corresponds to a respective one of several DC current levels; and

a tubular housing that entirely conforms to the shape of a standard fluorescent tube, and which houses the AC to DC conversion circuit, plurality of LEDs, and the selection circuit.

2. The variable output LED assembly of claim **1**, wherein the AC to DC conversion circuit comprises a series input capacitance, the selection circuit comprises a switch that changes a magnitude of the series input capacitance.

3. The variable output LED assembly of claim **1**, wherein the AC to DC conversion circuit comprises a first AC to DC conversion circuit on the first board and a second AC to DC conversion circuit on the second board.

4. The variable output LED assembly of claim **1**, wherein the AC to DC conversion circuit allows the variable output LED assembly to be installed in both fluorescent lamp fixtures that include a starter and fluorescent lamp fixtures that do not include a starter.

5. The variable output LED assembly of claim **1**, wherein the selection circuit is manually operated.

6. The variable output LED assembly of claim **1**, wherein the selection circuit is remotely operated.

7. The variable output LED assembly of claim **6**, further comprising a radio circuit that controls the selection circuit based on a received radio signal.

8. The variable output LED assembly of claim **7**, wherein the radio circuit is a wireless network interface circuit.

9. The variable output LED assembly of claim **1**, wherein the AC to DC conversion circuit comprises a DC to DC current regulator that provides the selected DC current in correspondence with an input reference, and wherein the plurality of selection states of the selection circuit adjust the input reference to different corresponding levels.

10. A tubular light emitting diode (LED) bulb for operation in a standard fluorescent lighting fixture, comprising:

a first circuit board and a second circuit board connected in tandem with the first circuit board, each of the first and second circuit boards including a plurality of LEDs;

a tubular housing in which the first and second circuit boards are disposed; and

the first circuit board including an alternating current (AC) to direct current (DC) conversion circuit configured to convert an AC output of a ballast connected to the standard fluorescent lighting fixture to a selected DC current level, and a selection circuit coupled to the AC to DC conversion circuit having a plurality of selection states, wherein each selection state causes the AC to DC conversion circuit to output the selected DC current at a different corresponding level;

wherein the first circuit board provides the selected DC current to the plurality of LEDs of the first circuit board and to the second circuit board, wherein the second circuit board is configured to route the selected DC current through the plurality of LEDs of the second circuit board.

11. The tubular LED bulb of claim **10**, wherein the first and second circuit boards are identical in layout and components and include jumper blocks to configure each circuit board, wherein the first circuit board is configured to provide the selected DC current from the AC output of the ballast, and the second circuit board is configured to receive the selected DC current from the first circuit board and provide a return to the ballast.

12. The tubular LED bulb of claim **10**, wherein the AC to DC conversion circuit comprises a series input capacitance, the selection circuit comprises a switch that changes a magnitude of the series input capacitance.

13. The tubular LED bulb of claim **10**, wherein the AC to DC conversion circuit allows the variable output LED assembly to be installed in the standard fluorescent lighting fixture without regard to polarity.

14. The tubular LED bulb of claim **10**, wherein the AC to DC conversion circuit allows the variable output LED assembly to be installed in a standard fluorescent lighting fixture that include a starter and a standard fluorescent lighting fixture that do not include a starter.

15. The tubular LED bulb of claim **10**, wherein the selection circuit is remotely operated.

16. The tubular LED bulb of claim **15**, further comprising a radio circuit that controls the selection circuit based on a received radio signal.

17. The tubular LED bulb of claim **16**, wherein the radio circuit is a wireless network interface circuit.

18. A tubular light emitting diode (LED) bulb, comprising:

a selection circuit having a plurality of selection settings where each selection setting corresponds to a respective one of several DC current levels;

a plurality of LEDs that are powered by a DC current at a level corresponding to one of the several DC levels; and

wherein the plurality of LEDs is divided between a first board and a second board, wherein the first and second boards are electrically connected in series between end cap electrodes of the tubular housing in a variable output LED assembly of the tubular LED bulb, and wherein the first and second boards are configured such that the variable output LED assembly can placed into a fluorescent light fixture without regard for orientation of the of the variable output LED assembly between electrodes of the fluorescent light fixture.

19. The tubular LED bulb of claim **18**, further comprising an alternating current (AC) to direct current (DC) conversion circuit responsive to the selection circuit that provides the DC current at the level, and wherein the AC to DC conversion circuit comprises a first AC to DC conversion circuit on the first board and a second AC to DC conversion circuit on the second board.

20. The tubular LED bulb of claim **19**, wherein the selection circuit controls the AC to DC conversion circuit output current level and via a switch that changes a magnitude of a series input capacitance in series with the AC to DC conversion circuit and which adjusts the AC impedance presented to an AC power source that provides AC power to the tubular LED bulb.

* * * * *