US009223859B2

(12) **United States Patent**
Manera et al.

(10) **Patent No.: US 9,223,859 B2**
(45) **Date of Patent: Dec. 29, 2015**

(54) **METHOD AND APPARATUS FOR SUMMARIZING COMMUNICATIONS**

(75) Inventors: **Alvaro Manera**, Espoo (FI); **Moises Martinez**, Berlin (DE)

(73) Assignee: **HERE GLOBAL B.V.**, Veldhoven (NL)

(*) Notice: Subject to any disclaimer, the term of this patent is extended or adjusted under 35 U.S.C. 154(b) by 214 days.

(21) Appl. No.: **13/105,535**

(22) Filed: **May 11, 2011**

(65) **Prior Publication Data**

US 2012/0290289 A1 Nov. 15, 2012

(51) **Int. Cl.**
G06F 17/27 (2006.01)
G06F 17/30 (2006.01)

(52) **U.S. Cl.**
CPC ***G06F 17/30719*** (2013.01); ***G06F 17/2785*** (2013.01)

(58) **Field of Classification Search**
None
See application file for complete search history.

(56) **References Cited**

U.S. PATENT DOCUMENTS

4,594,686	A *	6/1986	Yoshida	704/8
5,369,573	A *	11/1994	Holloran et al.	715/234
6,023,669	A *	2/2000	Suda et al.	704/2
6,205,456	B1 *	3/2001	Nakao	715/201
6,308,187	B1 *	10/2001	DeStefano	715/234
6,816,884	B1	11/2004	Summers	
6,895,257	B2	5/2005	Boman et al.	
7,120,865	B1	10/2006	Horvitz et al.	
7,346,494	B2 *	3/2008	Ando et al.	704/9
7,496,500	B2 *	2/2009	Reed et al.	704/9
7,587,309	B1 *	9/2009	Rohrs et al.	704/10
7,788,262	B1 *	8/2010	Shirwadkar	707/737
7,801,960	B2	9/2010	Hockey	
8,108,398	B2 *	1/2012	Guday et al.	707/739
RE43,861	E *	12/2012	McEntee et al.	704/4
8,392,183	B2 *	3/2013	Weber	704/231
2003/0158903	A1 *	8/2003	Rohall et al.	709/206
2003/0177190	A1 *	9/2003	Moody et al.	709/206
2004/0034520	A1 *	2/2004	Langkilde-Geary et al.	704/1
2004/0225651	A1	11/2004	Musgrove et al.	
2004/0260533	A1 *	12/2004	Wakita et al.	704/4
2005/0108338	A1 *	5/2005	Simske et al.	709/206
2005/0192992	A1 *	9/2005	Reed et al.	707/101
2008/0187125	A1	8/2008	Siegrist	
2010/0010815	A1	1/2010	Bells et al.	

(Continued)

FOREIGN PATENT DOCUMENTS

CA	2 414 330	A1	6/2003
CA	2 670 560	A1	1/2010

(Continued)

OTHER PUBLICATIONS

Corston-Oliver et al., "Task-focused Summarization of Email", In Proceedings of the ACL-04 (pp. 43-50), 2004.*

(Continued)

Primary Examiner — Brian Albertalli
(74) *Attorney, Agent, or Firm* — Ditthavong & Steiner, P.C.

(57) **ABSTRACT**

A method, apparatus and computer program are provided for summarizing one or more communications. The method, apparatus and computer program process and/or facilitate a processing of one or more communications to generate at least one summary. The method, apparatus and computer program further cause, at least in part, a transformation of the at least one summary based, at least in part, on at least one narrative viewpoint. The method, apparatus and computer program further cause, at least in part, a presentation of the transformation.

21 Claims, 10 Drawing Sheets

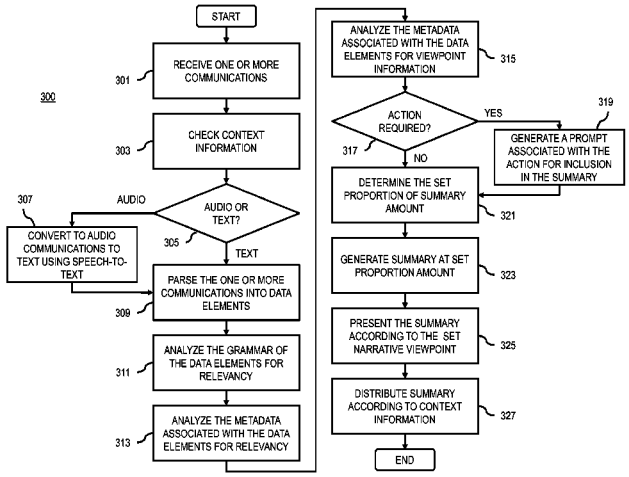

(56) **References Cited**

U.S. PATENT DOCUMENTS

2010/0010816	A1	1/2010	Bells et al.	
2012/0259852	A1 *	10/2012	Aasen et al.	707/737

FOREIGN PATENT DOCUMENTS

CA	2 670 562	A1	1/2010
EP	2 315 129	A1	4/2011
WO	WO 98/09228	A1	3/1998
WO	WO 2007/087120	A2	8/2007
WO	WO 2008/070094	A2	6/2008

OTHER PUBLICATIONS

Corston-Oliver, Simon, et al. "Task-focused summarization of email." ACL-04 Workshop: Text Summarization Branches Out. 2004.*

Faulring, Andrew, et al. "Agent-assisted task management that reduces email overload." Proceedings of the 15th international conference on Intelligent user interfaces. ACM, 2010.*

International Search Report for PCT/FI2012/050341 dated Jul. 24, 2012, pp. 1-5.

Written Opinion for PCT/FI2012/050341 dated Jul. 24, 2012, pp. 1-7.

"Autosummarize a document in Microsoft Office Word 2007," Microsoft in Education, accessed Aug. 11, 2011 (http://www.microsoft.com/education/autosummarize.aspx).

"TitleCase—Convert text to Title Case, UPPERCASE and lowercase," accessed Aug. 11, 2011 (http://titlecase.com/).

Antidze et al., "Software Tools for Morphological and Syntactic Analysis of Natural Language Texts," Tbilisi State University, Vekua Institute of Applied Mathematics.

Garvin, "The Fulcrum Syntactic Analyzer for Russian," The Bunker-Ramo Corporation, 1967.

Pancik, "Syntactic parser of English sentences," Jan. 14, 2008 (http://spes.sourceforge.net/).

Temperley, "Link Grammar," Aug. 20, 2009 (http://www.link.cs.cmu.edu/link/).

Extended European Search Report for related European Application No. 12782636.0, dated Oct. 10, 2014, 7 pages.

* cited by examiner

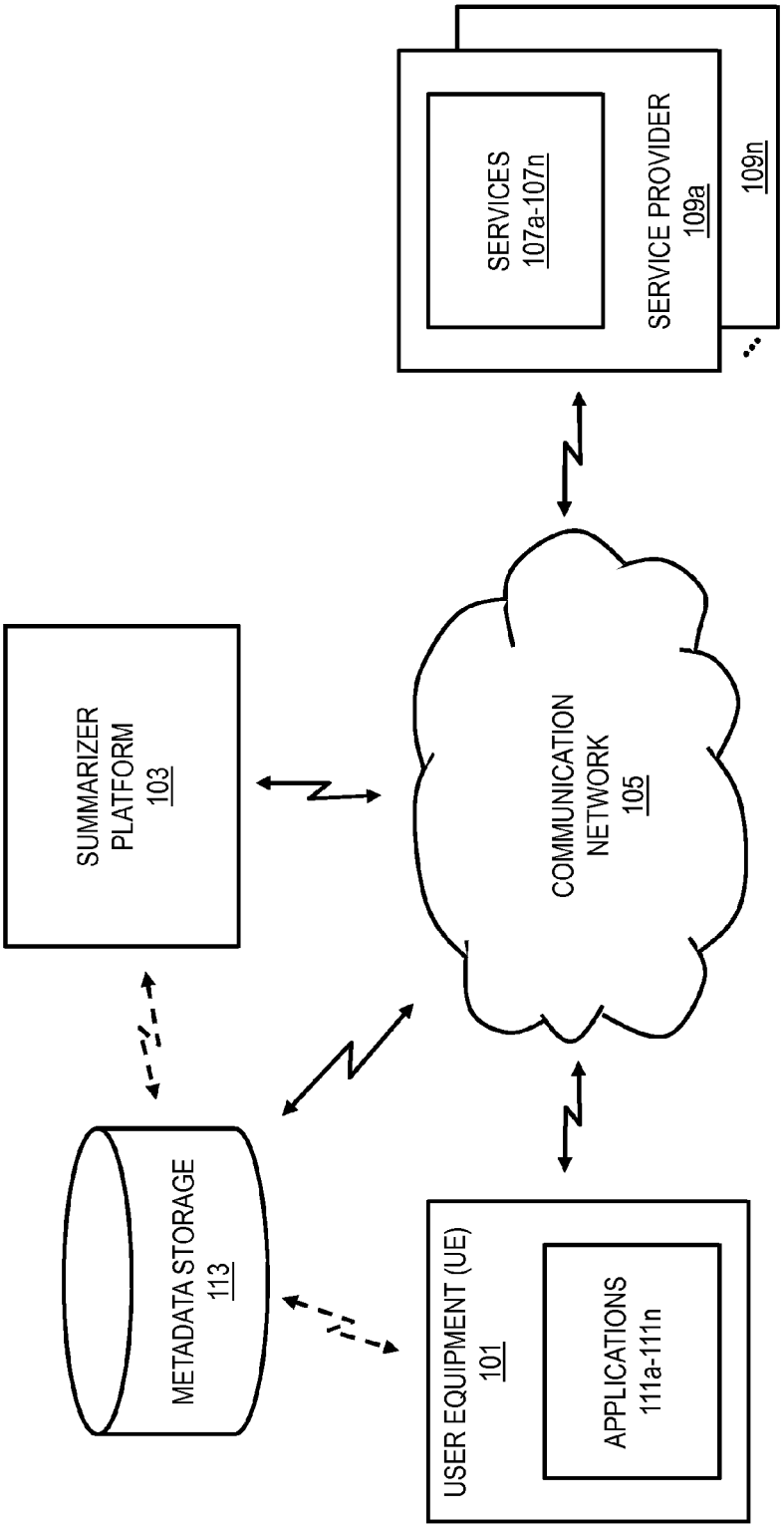
SERVICES
107a-107n
SERVICE PROVIDER
109a
109n
SUMMARIZER
PLATFORM
103
COMMUNICATION
NETWORK
105
METADATA STORAGE
113
USER EQUIPMENT (UE)
101
APPLICATIONS
111a-111n

FIG. 1

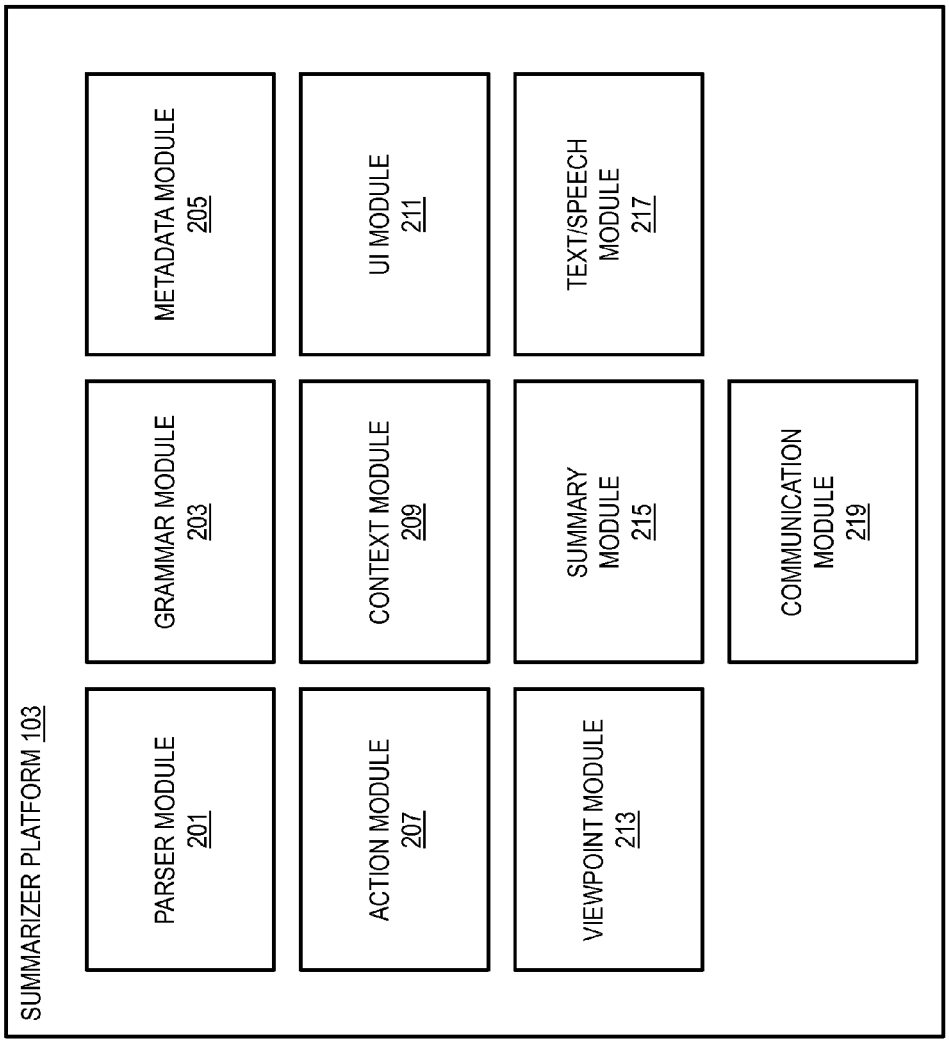
SUMMARIZER PLATFORM 103
PARSER MODULE 201
GRAMMAR MODULE 203
METADATA MODULE 205
ACTION MODULE 207
CONTEXT MODULE 209
UI MODULE 211
VIEWPOINT MODULE 213
SUMMARY MODULE 215
TEXT/SPEECH MODULE 217
COMMUNICATION MODULE 219

FIG. 2

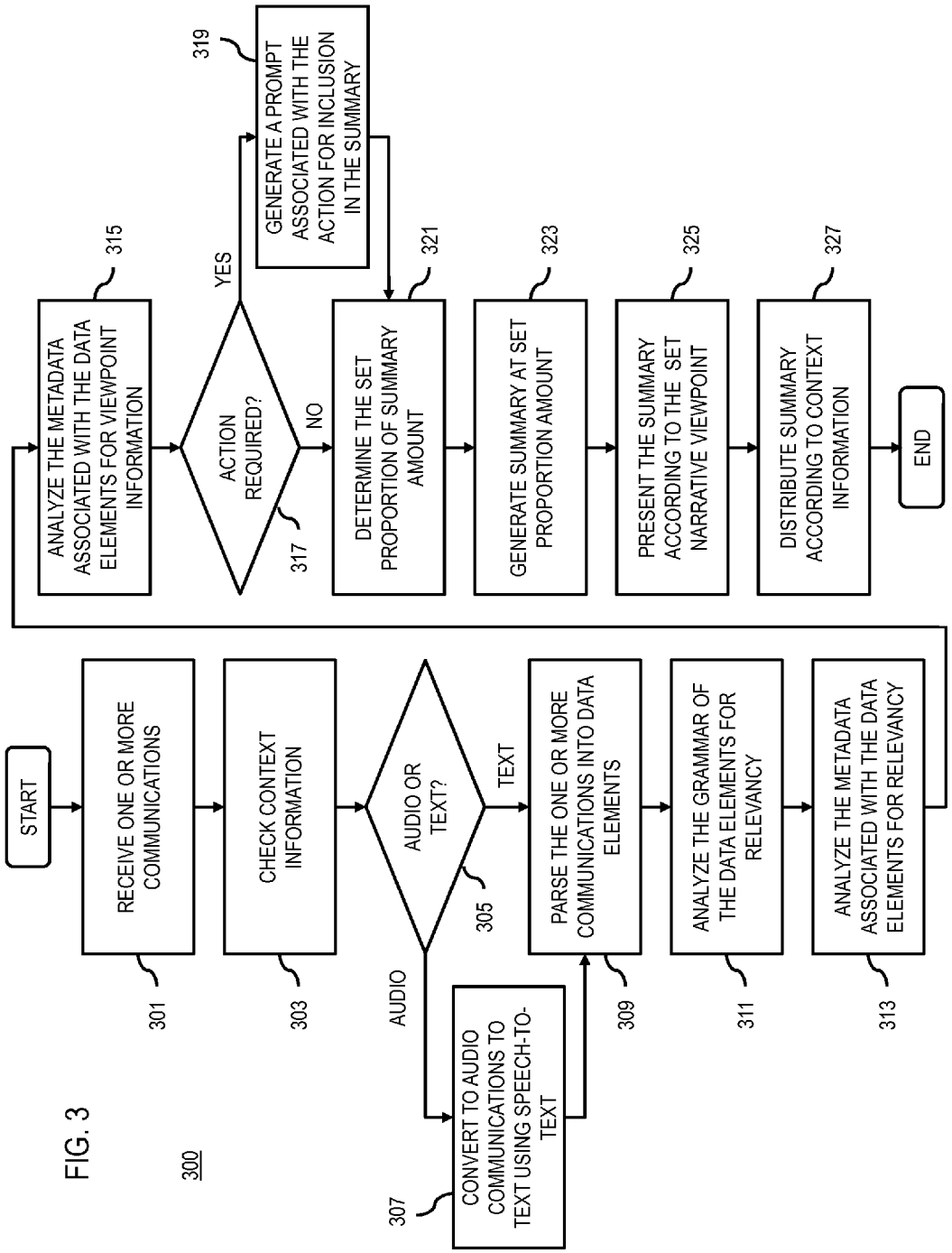
START
RECEIVE ONE OR MORE COMMUNICATIONS
301
CHECK CONTEXT INFORMATION
303
AUDIO OR TEXT?
305
AUDIO
TEXT
CONVERT TO AUDIO COMMUNICATIONS TO TEXT USING SPEECH-TO-TEXT
307
PARSE THE ONE OR MORE COMMUNICATIONS INTO DATA ELEMENTS
309
ANALYZE THE GRAMMAR OF THE DATA ELEMENTS FOR RELEVANCY
311
ANALYZE THE METADATA ASSOCIATED WITH THE DATA ELEMENTS FOR RELEVANCY
313
ANALYZE THE METADATA ASSOCIATED WITH THE DATA ELEMENTS FOR VIEWPOINT INFORMATION
315
ACTION REQUIRED?
317
YES
NO
GENERATE A PROMPT ASSOCIATED WITH THE ACTION FOR INCLUSION IN THE SUMMARY
319
DETERMINE THE SET PROPORTION OF SUMMARY AMOUNT
321
GENERATE SUMMARY AT SET PROPORTION AMOUNT
323
PRESENT THE SUMMARY ACCORDING TO THE SET NARRATIVE VIEWPOINT
325
DISTRIBUTE SUMMARY ACCORDING TO CONTEXT INFORMATION
327
END

FIG. 3

300

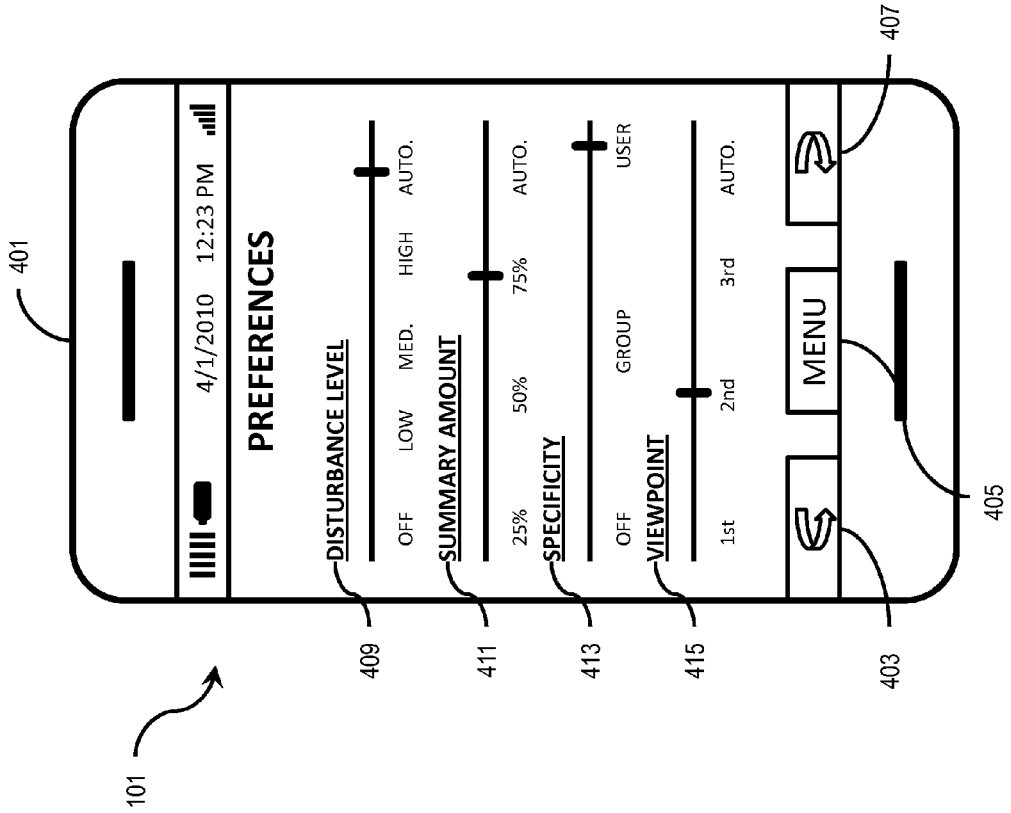
401
4/1/2010 12:23 PM
PREFERENCES
DISTURBANCE LEVEL
OFF LOW MED. HIGH AUTO.
SUMMARY AMOUNT
25% 50% 75% AUTO.
SPECIFICITY
OFF GROUP USER
VIEWPOINT
1st 2nd 3rd AUTO.
MENU
409
411
413
415
403
405
407
101

FIG. 4

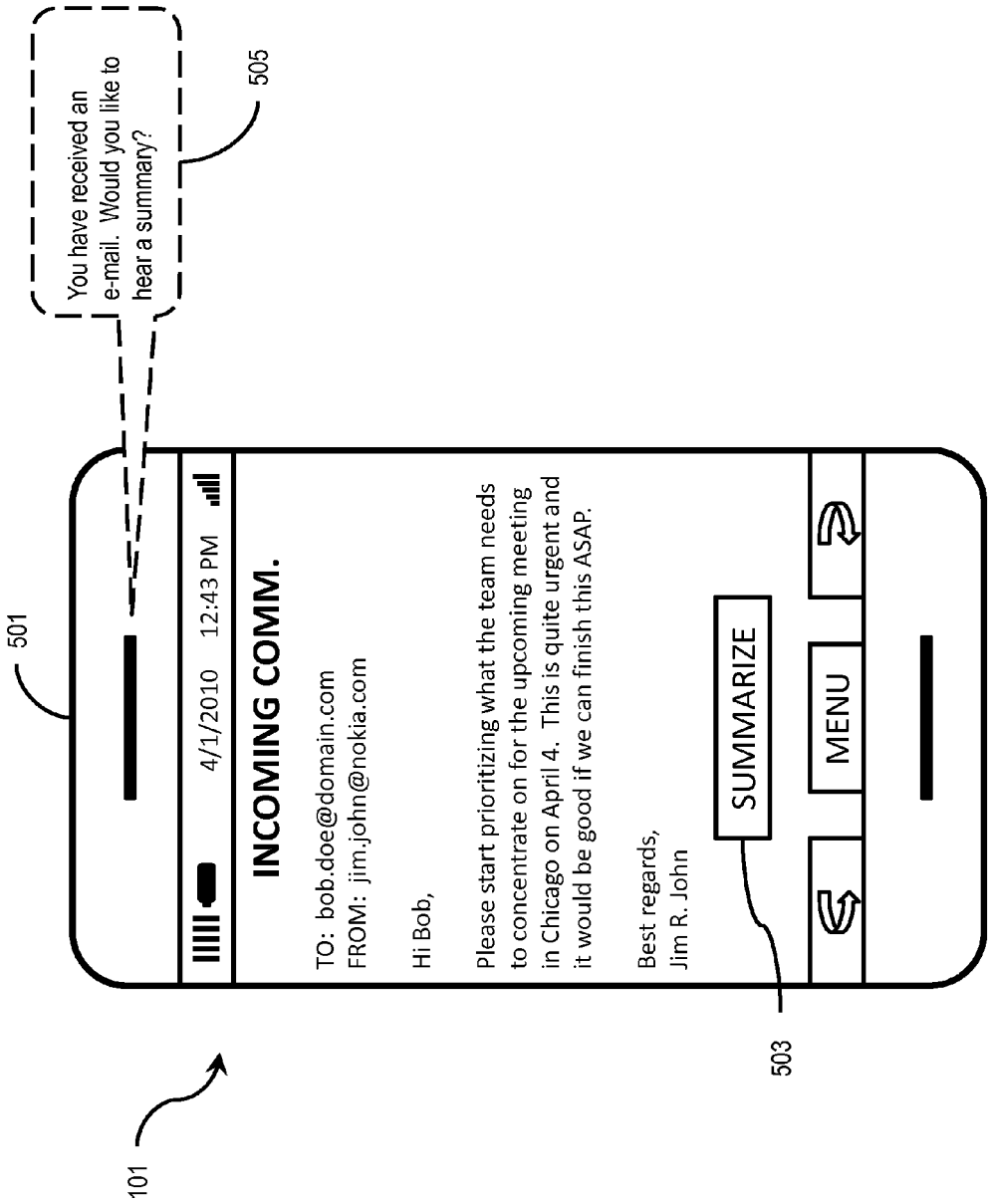
You have received an e-mail. Would you like to hear a summary?
505
501
4/1/2010 12:43 PM
INCOMING COMM.
TO: bob.doe@domain.com
FROM: jim.john@nokia.com
Hi Bob,
Please start prioritizing what the team needs to concentrate on for the upcoming meeting in Chicago on April 4. This is quite urgent and it would be good if we can finish this ASAP.
Best regards,
Jim R. John
SUMMARIZE
MENU
503
101

FIG. 5

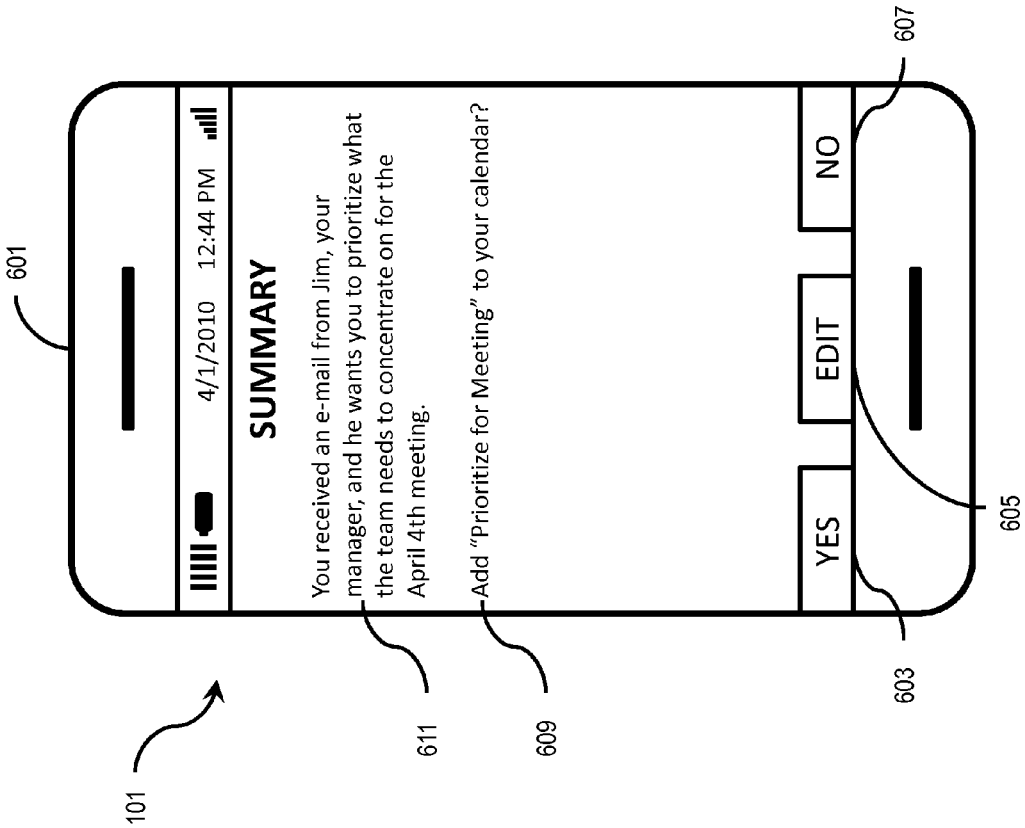
601
4/1/2010 12:44 PM
SUMMARY
You received an e-mail from Jim, your manager, and he wants you to prioritize what the team needs to concentrate on for the April 4th meeting.
Add "Prioritize for Meeting" to your calendar?
YES
EDIT
NO
101
611
609
603
605
607

FIG. 6A

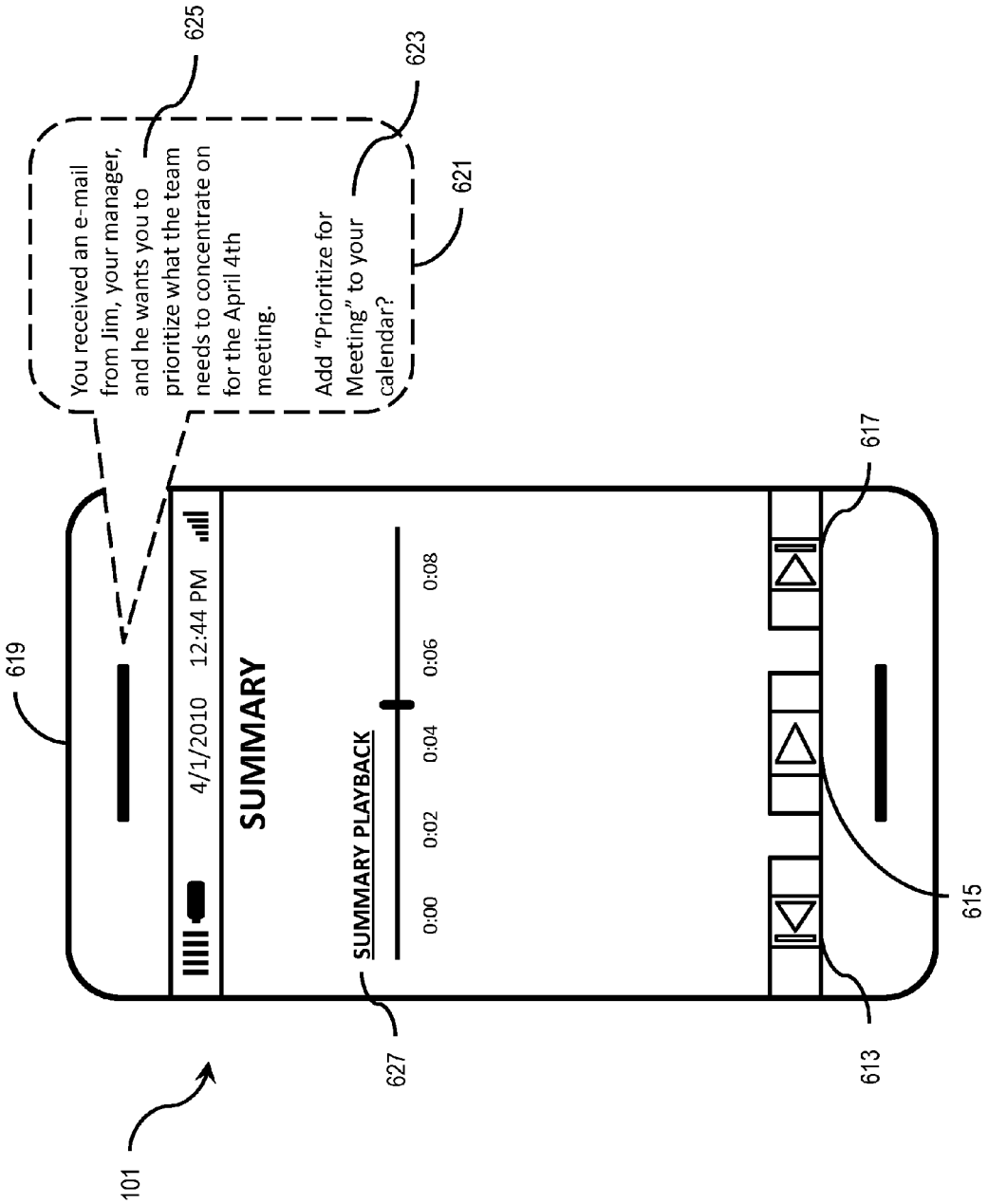
You received an e-mail from Jim, your manager, and he wants you to prioritize what the team needs to concentrate on for the April 4th meeting.
Add "Prioritize for Meeting" to your calendar?
4/1/2010 12:44 PM
SUMMARY
SUMMARY PLAYBACK
0:00
0:02
0:04
0:06
0:08
101
613
615
617
619
621
623
625
627

FIG. 6B

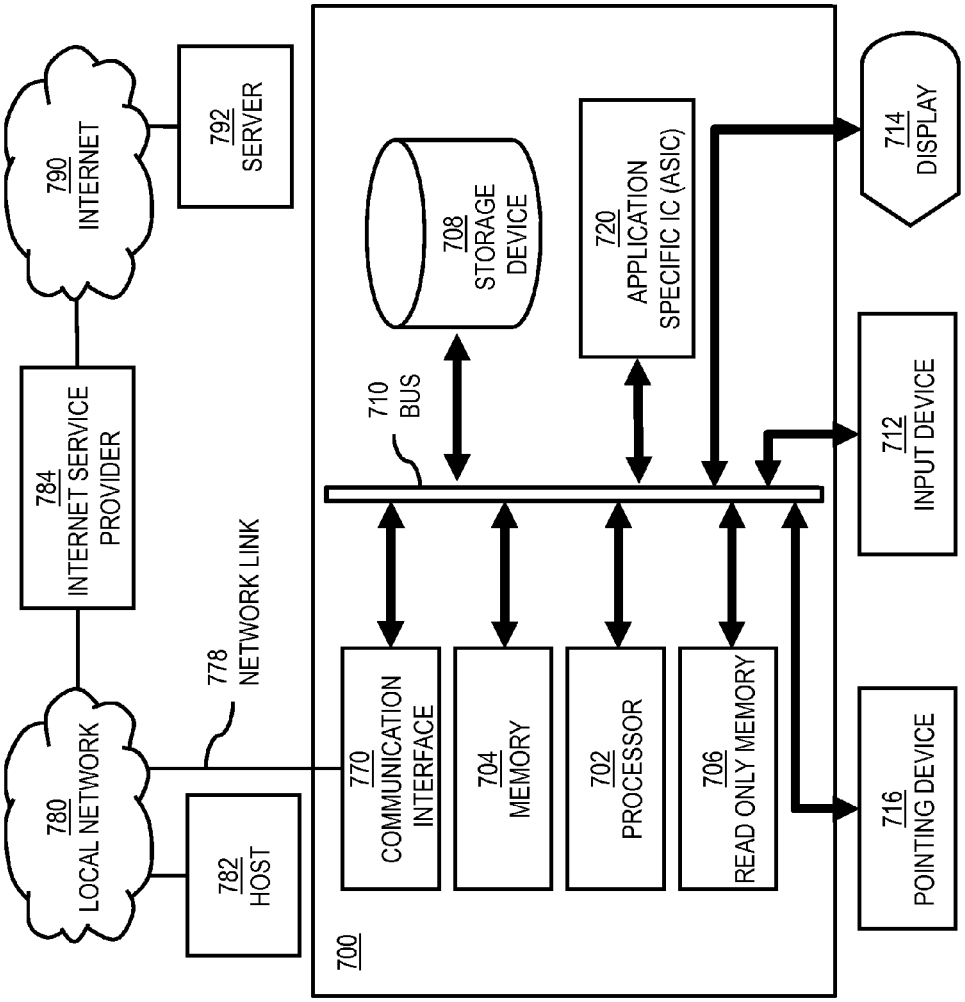
790
INTERNET
792
SERVER
784
INTERNET SERVICE PROVIDER
780
LOCAL NETWORK
782
HOST
778
NETWORK LINK
700
770
COMMUNICATION INTERFACE
704
MEMORY
702
PROCESSOR
706
READ ONLY MEMORY
710
BUS
708
STORAGE DEVICE
720
APPLICATION SPECIFIC IC (ASIC)
714
DISPLAY
712
INPUT DEVICE
716
POINTING DEVICE

FIG. 7

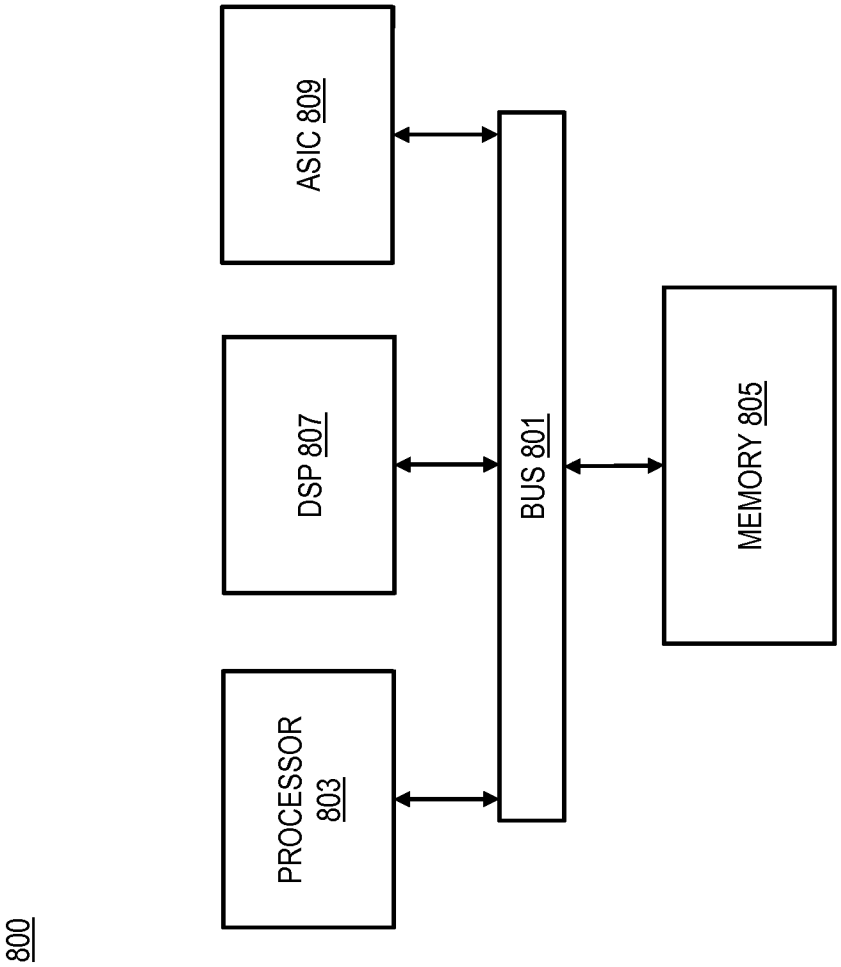

FIG. 8

FIG. 9

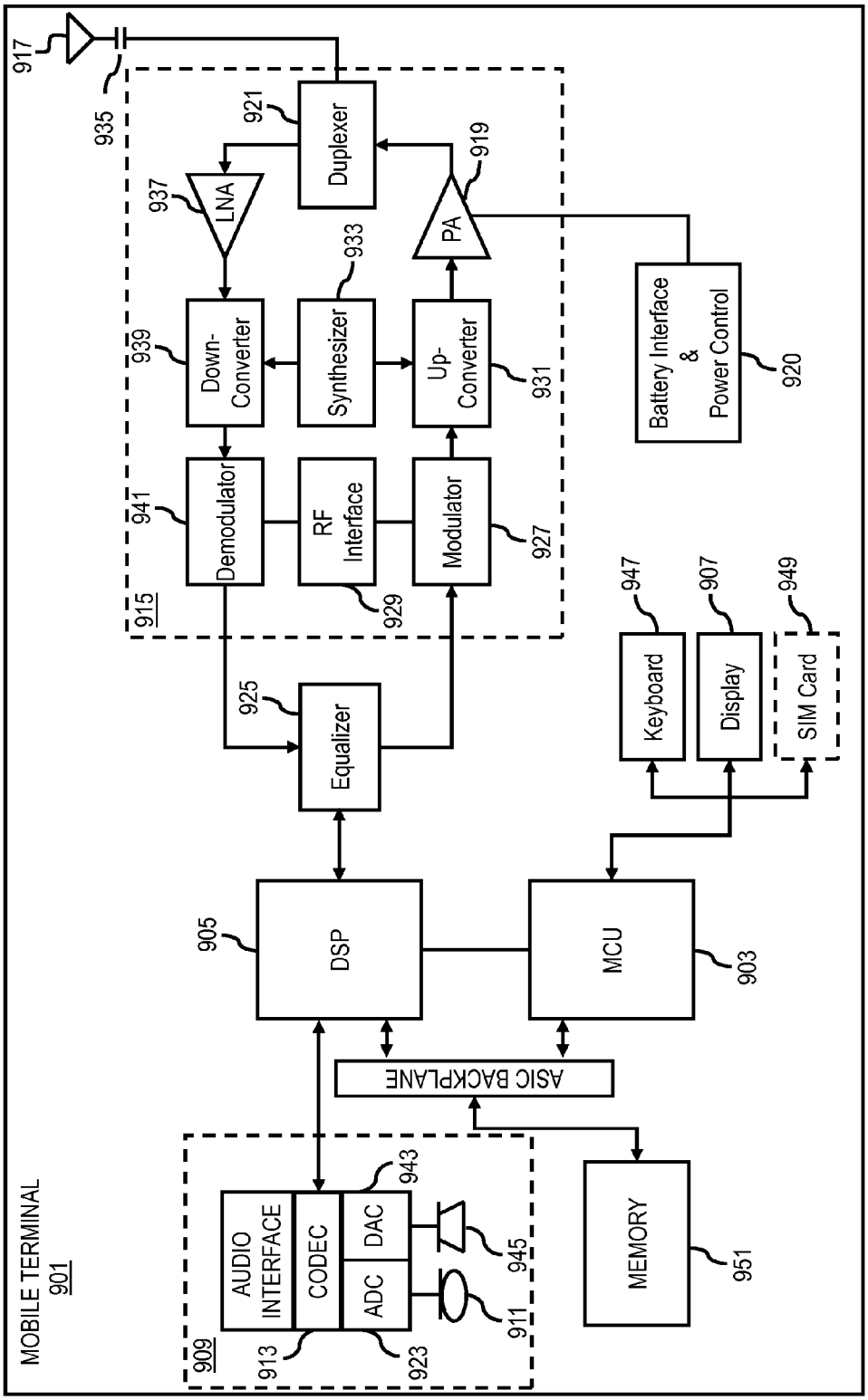
MOBILE TERMINAL
901
917
935
921
Duplexer
937
LNA
919
PA
933
939
Down-Converter
Synthesizer
Up-Converter
931
Battery Interface & Power Control
920
941
Demodulator
RF Interface
Modulator
927
929
915
947
907
949
Keyboard
Display
SIM Card
925
Equalizer
905
DSP
MCU
903
ASIC BACKPLANE
909
AUDIO INTERFACE
CODEC
DAC
ADC
943
945
911
913
923
MEMORY
951

METHOD AND APPARATUS FOR SUMMARIZING COMMUNICATIONS

BACKGROUND

Service providers and device manufacturers (e.g., wireless, cellular, etc.) are continually challenged to deliver value and convenience to consumers by, for example, providing compelling network services. With such diverse and sophisticated network services and devices, more and more consumers carry at least one communication device with them at all times. For example, many consumers carry a cell phone with voicemail, SMS and e-mail capabilities so that they are reachable by many forms of communication at all times. The convenience, however, of being reachable at all times by many forms of communication comes with some challenges. With a continual stream of incoming communications, consumers can suffer from information overload, needing to review countless communications at a time to stay current with their busy schedules. Consumers can also find themselves in situations that require most of their attention focused on a primary task, yet the consumers would still value the ability to receive communications in a less distracting form. As such, service providers and device manufacturers face significant technical challenges to providing services that ease information overload and maintain some level of connectivity despite situations that require limited distractions.

SOME EXAMPLE EMBODIMENTS

Therefore, there is a need for an approach for summarizing communications to filter each communication into a summary that includes the relevant information and presenting the summary to a user in a way that allows the user to apprehend the information quickly and with limited distraction, especially in situations where receiving the communication is not the primary task of the user.

According to one embodiment, a method comprises processing and/or facilitating a processing of one or more communications to generate at least one summary. The method also comprises causing, at least in part, a transformation of the at least one summary based, at least in part, on at least one narrative viewpoint. The method further comprises causing, at least in part, a presentation of the transformation.

According to another embodiment, an apparatus comprises at least one processor, and at least one memory including computer program code for one or more programs, the at least one memory and the computer program code configured to, with the at least one processor, cause, at least in part, the apparatus to process and/or facilitate a processing of one or more communications to generate at least one summary. The apparatus is also caused to transform the at least one summary based, at least in part, on at least one narrative viewpoint. The apparatus is further caused to present the transformation.

According to another embodiment, a computer-readable storage medium carries one or more sequences of one or more instructions which, when executed by one or more processors, cause, at least in part, an apparatus to process and/or facilitate a processing of one or more communications to generate at least one summary. The apparatus is also caused to transform the at least one summary based, at least in part, on at least one narrative viewpoint. The apparatus is further caused to present the transformation.

According to another embodiment, an apparatus comprises means for processing and/or facilitating a processing of one or more communications to generate at least one summary. The apparatus also comprises means for causing, at least in part, a transformation of the at least one summary based, at least in part, on at least one narrative viewpoint. The apparatus further comprises means for causing, at least in part, a presentation of the transformation.

In addition, for various example embodiments of the invention, the following is applicable: a method comprising facilitating a processing of and/or processing (1) data and/or (2) information and/or (3) at least one signal, the (1) data and/or (2) information and/or (3) at least one signal based, at least in part, on (including derived at least in part from) any one or any combination of methods (or processes) disclosed in this application as relevant to any embodiment of the invention.

For various example embodiments of the invention, the following is also applicable: a method comprising facilitating access to at least one interface configured to allow access to at least one service, the at least one service configured to perform any one or any combination of network or service provider methods (or processes) disclosed in this application.

For various example embodiments of the invention, the following is also applicable: a method comprising facilitating creating and/or facilitating modifying (1) at least one device user interface element and/or (2) at least one device user interface functionality, the (1) at least one device user interface element and/or (2) at least one device user interface functionality based, at least in part, on data and/or information resulting from one or any combination of methods or processes disclosed in this application as relevant to any embodiment of the invention, and/or at least one signal resulting from one or any combination of methods (or processes) disclosed in this application as relevant to any embodiment of the invention.

For various example embodiments of the invention, the following is also applicable: a method comprising creating and/or modifying (1) at least one device user interface element and/or (2) at least one device user interface functionality, the (1) at least one device user interface element and/or (2) at least one device user interface functionality based at least in part on data and/or information resulting from one or any combination of methods (or processes) disclosed in this application as relevant to any embodiment of the invention, and/or at least one signal resulting from one or any combination of methods (or processes) disclosed in this application as relevant to any embodiment of the invention.

In various example embodiments, the methods (or processes) can be accomplished on the service provider side or on the mobile device side or in any shared way between service provider and mobile device with actions being performed on both sides.

Still other aspects, features, and advantages of the invention are readily apparent from the following detailed description, simply by illustrating a number of particular embodiments and implementations, including the best mode contemplated for carrying out the invention. The invention is also capable of other and different embodiments, and its several details can be modified in various obvious respects, all without departing from the spirit and scope of the invention. Accordingly, the drawings and description are to be regarded as illustrative in nature, and not as restrictive.

BRIEF DESCRIPTION OF THE DRAWINGS

The embodiments of the invention are illustrated by way of example, and not by way of limitation, in the figures of the accompanying drawings:

FIG. **1** is a diagram of a system capable of summarizing one or more communications, according to one embodiment;

FIG. **2** is a diagram of the components of a summarizer platform, according to one embodiment;

FIG. **3** is a flowchart of a process for summarizing one or more communications, according to one embodiment;

FIG. **4** is a diagram of a user interface utilized in the process of FIG. **3**, according to one embodiment;

FIG. **5** is a diagram of a user interface utilized in the process of FIG. **3**, according to one embodiment;

FIGS. **6**A and **6**B are diagrams of a user interfaces utilized in the process of FIG. **3**, according to one embodiment;

FIG. **7** is a diagram of hardware that can be used to implement an embodiment of the invention;

FIG. **8** is a diagram of a chip set that can be used to implement an embodiment of the invention; and

FIG. **9** is a diagram of a mobile terminal (e.g., handset) that can be used to implement an embodiment of the invention.

DESCRIPTION OF SOME EMBODIMENTS

Examples of a method, apparatus, and computer program for summarizing communications are disclosed. In the following description, for the purposes of explanation, numerous specific details are set forth in order to provide a thorough understanding of the embodiments of the invention. It is apparent, however, to one skilled in the art that the embodiments of the invention may be practiced without these specific details or with an equivalent arrangement. In other instances, well-known structures and devices are shown in block diagram form in order to avoid unnecessarily obscuring the embodiments of the invention. Although various embodiments are discussed with respect to communications, it is contemplated that any type of language-based information not traditionally considered a communication (e.g., instructions, books, magazines, newspapers, attachments to communications, etc.) can be summarized in accordance with the embodiments discussed below.

FIG. **1** is a diagram of a system capable of summarizing communications, according to one embodiment. As discussed above, many consumers find themselves carrying at least one communication device with them at all time. Consumers do this, in part, because of the large flow of information that is accessible through their communication device. Consumers also do this, in part, because they are required to stay in communication with, for example, their job, family members, friends, clients, etc. Because of the large flow of information that occurs on a daily basis, sometimes consumers feel overloaded by the large amount of communications they need to review and the information contained within the communications. Consumers would appreciate reviewing summaries of the communications that still include the relevant and essential information from the original communication. Consumers would also appreciate having the summary presented to them in a way that is easily understandable.

Efforts to ease the information overload have included using text-to-speech synthesizers to read text communications to the consumers. However, especially, for long communications, such as detailed e-mail communications, converting the text into speech and reading the entire communication to the consumer does not effectively reduce the information overload. The user is still left overloaded by having to listen to and process the entire communication, rather than reading the entire communication. The ability to receive a communication in the form of speech, rather than having to read the communication, may allow the user to perform a primary task, such as driving a car, but the read to understand and process the entire e-mail can still heavily distract from the primary task. Rather than concentrating on the primary task, the user is left having to concentrate on listening to the communication read aloud and process the entire communication.

Efforts to ease the information overload also have included generating a summary of the communication and presenting the summary to the consumer rather than the entire original communication. However, attempts to generate a summary have failed to include the relevant information within the original communication. Additionally, attempts to generate the summary have failed to generate a summary that is easily understandable by the consumer. Previous attempts merely extracted terms out of the original communication and presented the terms in an unnatural language form. Although the consumer is has to process less information, processing the information is no less easy than processing the entire original communication because the user has to understand a summary that is not easily understandable, if at all.

To address these problems, a system **100** of FIG. **1** introduces the capability to generate a summary of one or more communications that contain the relevant information of the original one or more communications and present the summary in a manner that is easily understandable to a user. By way of example, a user receives an e-mail at the user's cell phone while driving a car. The system **100** automatically starts processing the e-mail to generate a summary in response to the system **100** detecting that the user's current primary task is driving the car. The system **100** parses the e-mail into the smallest data elements (e.g., the subjects, verbs and objects within the e-mail). After parsing the e-mail into the data elements, the system consolidates relevancy information regarding the data elements using a grammar analyzer for the target language. The system **100** also compares the data elements to metadata to generate the relevancy information. The metadata can include information from the user's cell phone, such as a contacts list, a e-mail application, a calendar application, etc. that contains information that the system can associate to the data elements extracted from the one or more communications. The system **100** further compares the data elements to the metadata to generate transformation information. The transformation information allows the system **100** generate the summary according a set narrative viewpoint so that the summary us presented in a more easily understandable form to the user. After the above analysis, the system **100** generates the summary of the relevant data elements in the set narrative viewpoint and presents the summary to the user using a text-to-speech synthesizer that causes little to no distraction of the primary task of driving. Thus, the system **100** allows the user to receive the relevant information regarding the one or more communications in any easy to understand format while maintaining his or her attention to the primary task of driving the car.

As shown in FIG. **1**, the system **100** comprises user equipment (UE) **101** having connectivity to a summarizer platform **103**, a metadata storage **113** and service providers **109***a*-**109***n* (collectively referred to as service providers **109**) via a communication network **105**. The UE **101** may run one or more applications **111***a*-**111***n* (collectively referred to applications **111**). The applications **111** can include, for example, e-mail applications, mapping applications, navigation applications, messaging applications, calendar applications, sensor applications, Internet browser applications, social networking applications, audio applications, text-to-speech and speech-to-text applications, etc. The service providers **109** can provide one or more services **107***a*-**107***n* (collectively known as services **107**) (e.g., communication services, location based services, mapping services, navigation services, social networking services, banking services, etc.) to the UE **101**. The

metadata storage **113** stores the metadata. In one embodiment, the metadata storage **113** is an independent element of the system **100**, as illustrated in FIG. **1**. In one embodiment, the metadata storage **113** can be part of the UE **101**. In one embodiment, the metadata storage **113** can be part of the summarizer platform. In one embodiment, the metadata storage **113** can be provided as one or more service **107** by one or more of the service providers **109**. The summarizer platform **103** generates the summaries of one or more communications, as discussed below. In one embodiment, the summarizer platform **103** is an independent element of the system **100**. In one embodiment, the summarizer platform **103** is part of the UE **101** as, for example, one of the applications **111** or a hardware module. In one embodiment, the summarizer platform **103** is provided by one or more service **107** by one or more service provider **109**.

By way of example, the communication network **105** of the system **100** includes one or more networks such as a data network (not shown), a wireless network (not shown), a telephony network (not shown), or any combination thereof. It is contemplated that the data network may be any local area network (LAN), metropolitan area network (MAN), wide area network (WAN), a public data network (e.g., the Internet), short range wireless network, or any other suitable packet-switched network, such as a commercially owned, proprietary packet-switched network, e.g., a proprietary cable or fiber-optic network, and the like, or any combination thereof. In addition, the wireless network may be, for example, a cellular network and may employ various technologies including enhanced data rates for global evolution (EDGE), general packet radio service (GPRS), global system for mobile communications (GSM), Internet protocol multimedia subsystem (IMS), universal mobile telecommunications system (UMTS), etc., as well as any other suitable wireless medium, e.g., worldwide interoperability for microwave access (WiMAX), Long Term Evolution (LTE) networks, code division multiple access (CDMA), wideband code division multiple access (WCDMA), wireless fidelity (WiFi), wireless LAN (WLAN), Bluetooth®, Internet Protocol (IP) data casting, satellite, mobile ad-hoc network (MANET), and the like, or any combination thereof.

The UE **101** is any type of mobile terminal, fixed terminal, or portable terminal including a mobile handset, station, unit, device, multimedia computer, multimedia tablet, Internet node, communicator, desktop computer, laptop computer, notebook computer, netbook computer, tablet computer, personal communication system (PCS) device, personal navigation device, personal digital assistants (PDAs), audio/video player, digital camera/camcorder, positioning device, television receiver, radio broadcast receiver, electronic book device, game device, or any combination thereof, including the accessories and peripherals of these devices, or any combination thereof. It is also contemplated that the UE **101** can support any type of interface to the user (such as "wearable" circuitry, etc.).

By way of example, the UE **101**, the metadata storage **113**, the summarizer platform **103** and the service providers **109** communicate with each other and other components of the communication network **105** using well known, new or still developing protocols. In this context, a protocol includes a set of rules defining how the network nodes within the communication network **105** interact with each other based on information sent over the communication links. The protocols are effective at different layers of operation within each node, from generating and receiving physical signals of various types, to selecting a link for transferring those signals, to the format of information indicated by those signals, to identifying which software application executing on a computer system sends or receives the information. The conceptually different layers of protocols for exchanging information over a network are described in the Open Systems Interconnection (OSI) Reference Model.

Communications between the network nodes are typically effected by exchanging discrete packets of data. Each packet typically comprises (1) header information associated with a particular protocol, and (2) payload information that follows the header information and contains information that may be processed independently of that particular protocol. In some protocols, the packet includes (3) trailer information following the payload and indicating the end of the payload information. The header includes information such as the source of the packet, its destination, the length of the payload, and other properties used by the protocol. Often, the data in the payload for the particular protocol includes a header and payload for a different protocol associated with a different, higher layer of the OSI Reference Model. The header for a particular protocol typically indicates a type for the next protocol contained in its payload. The higher layer protocol is said to be encapsulated in the lower layer protocol. The headers included in a packet traversing multiple heterogeneous networks, such as the Internet, typically include a physical (layer 1) header, a data-link (layer 2) header, an internetwork (layer 3) header and a transport (layer 4) header, and various application (layer 5, layer 6 and layer 7) headers as defined by the OSI Reference Model.

FIG. **2** is a diagram of the components of the summarizer platform **103**, according to one embodiment. By way of example, the summarizer platform **103** includes one or more components for providing summaries of communications. It is contemplated that the functions of these components may be combined in one or more components or performed by other components of equivalent functionality. In this embodiment, the summarizer platform includes a parser module **201**, a grammar module **203**, a metadata module **205**, an action module **207**, a context module **209**, a user interface (UI) module **211**, a viewpoint module **213**, a summary module **215**, a text/speech module **217** and a communication module **219**.

The parser module **201** parses one or more communications into the basic elements of the communications. By way of example, the parser module **201** parses an e-mail message into the various data elements that convey the information, such as the subjects, verbs and objects within the e-mail. In one embodiment, the parser module **201** can first parse the e-mail message into the various sentences that convey the information. The parser module **201** can then parse the various sentences into the various data elements that convey the information, such as the subjects, verbs and objects within each e-mail. The parser module **201** decomposes the one or more communications into the data elements for analysis of the elements by the other components of the summarizer platform **103**. In one embodiment, the parser module **201** can also translate the one or more communications into one or more different languages for processing and/or generating the one or more summaries. The parser module **201** translates the one or more communications using conventional translation methods.

The grammar module **203** contains one or more grammar analyzers that determine relevancy information of the various parsed data elements from the parser module **201** for ranking the data elements to later determine which data elements should be included and excluded from the generated summary. The grammar module **203** also determines the semantics of the data elements in the communication to determine

how the data elements used in the generated summary should be modified to correspond to the desired narrative viewpoint. By way of example, the grammar module **203** determines the narrative viewpoint of the data elements in the communication and determines how the narrative viewpoints should be modified by the viewpoint module **213** discussed below.

In one embodiment, the grammar module **203** applies extraction and abstraction natural language processing (NLP) technologies of word segmentation, stop word removal and summarization to each communication to determine the relevancy information of the various parsed data elements. In various embodiments, semantics of the various parsed data elements are determined based on a vocabulary model in the grammar module **203**. For example, in various embodiments, probabilistic latent semantic indexing (pLSI) or Latent Dirichlet allocation (LDA) is used to deduce semantics from words in the communication and determine relevancy. Such methods can be used to derive short text string words and topics from a set of documents that are directed to the everyday circumstances of consumers of network services. Because each topic is associated with a group of words in certain relative abundances, there is a topology relating topics to words and subtopics to higher level topics that breaks down the communication to determine the relevancy of the data elements.

By way of example, one grammar analyzer determines the respective frequencies of the one or more data elements within each sentence, within each communication and/or within all of the communications. For example, the grammar analyzer determines the frequencies of the subjects, verbs and objects parsed from the communication by the parser module **201**. By way of example, one grammar analyzer determines the relationship information among the one or more data elements, such as how the data elements refer to each other and/or modify each other. By way of example, one grammar analyzer compares the data elements to one or more definitions for each data element. In one embodiment, one grammar analyzer can perform a combination of the above three grammar analyzers. Based on the analysis of the grammar of the data elements, the grammar module **203** determines relevancy information for the data elements to determine, in part, which data elements are included in the summary presented to the user and which data elements are filtered out of the summary.

The metadata module **205** compares the data elements from the parser module **201** to metadata associated with the one or more data elements. The metadata module **205** generates relevancy information by comparing the data elements to the metadata to determine, in part, which data elements are presented to the user and which data elements are filtered out of the summary. The metadata module **205** also generates transformation information by comparing the data elements to the metadata. By way of example, the metadata module **205** compares e-mail addresses listed in the "TO:" and "FROM:" boxes to metadata contained, for example, in an address book or contacts list stored on a cell phone. Based on information stored in the address book or contacts list, the metadata module determines that the e-mail originates from the manager of the individual user that owns the cell phone. By way of example, based on the e-mail originating from the cell phone user's manager, any data element and/or sentence concerning the manager's name is deemed more relevant than data elements and/or sentences that do not concern the manager's name. By comparing the data elements to the metadata, the metadata data information can be included in the summary associated with the specific data elements to better relate the data elements to the user so that the user more easily processes the summary.

The action module **207** compares the data elements from the parser module **201** and, for example, relationship information from the grammar module **203** to determine whether any action is required by the user in response to the one or more communications. For example, in one communication, a question is posed to the user regarding their availability to attend a meeting. In response, the action module **207** generates a prompt for the user whether to RSVP to the meeting and whether to add the meeting to a calendar.

The context module **209** determines context information of the user, the UE **101** or a combination thereof to determine, for example, whether to generate summaries for one or more communications. The context module **209** can gather context information from, for example, one or more applications **111** running on the UE **101**, one or more hardware modules on the UE **101**, one or more services **107** provided by one or more service providers **109**, etc.

In one embodiment, the context module **209** determines whether the summarizer platform **103** should generate one or more summaries for one or communications. By way of example, the context module **209** determines that the UE **101** is currently running a navigation application with an active navigation route. In response, the context module **209** triggers the summarizer platform **103** to activate and generate summaries for one or more communications to avoid distracting the user from the primary task of driving.

In one embodiment, the context module **209** controls an approximate degree that the one or more communications are summarized. For example, the context module **209** determines from a signal from the speedometer of the car that the car is traveling faster than a certain threshold (e.g., 85 mph). In response, the context module **209** triggers the summarizer platform **103** to activate and generate summaries that have approximately less than 25% of the information and/or language contained in the original one or more communications. If the context module **209** determines from a signal from the speedometer that the car is traveling slower than the threshold, the context module **209** can trigger the summarizer platform **103** to activate and generate summaries that have approximately 75% of the information and/or language contained in the original communication, based on the assumption that more information can be presented to the user because the speed is slower.

Although the context module **209** controls the approximate degree that the one or more communications are summarized, the approximate degree is an estimation that is, in part, dependent on the capacity to condense the relevant information to the specified percentage. Thus, communications that have mostly relevant or mostly irrelevant information will be above or below the set approximation degrees, respectively. For example, a short message can contain highly relevant information such that, based on the length of the message and the highly relevant information, the generated summary will exceed the set approximation degree (e.g., approximately 25%). Conversely, a long message can contain mostly irrelevant information, such as information that does not pertain to the user of the UE **101**, and the generated summary will be below the set approximation degree (e.g., approximately 75%). In one embodiment, the content module **209** takes into account the relevancy of the information contained in the one or more communications, the length of the one or more communications and the set approximation degree, and generates the one or more summaries as close as possible to the set approximation degree.

In one embodiment, the context module **209** determines which communications should be passed to the UE **101** without generating summaries and which communications should be summarized, and a combination thereof. By way of example, if the context information of the UE **101** indicates that the user should receive little to no distraction, the context module **209** can determine to generate summaries for all of the incoming communications. If the context information of the UE **101** indicates that the user can receive some medium distractions, the context module **209** can determine that the summarizer platform **103** should generate summaries for incoming communications above a certain number of words and/or above a certain amount of time.

The UI module **211** generates the user interface used in interacting with the summarizer platform **103**.

The viewpoint module **213** allows for setting the summarizer platform **103** to a certain narrative viewpoint for generating the summaries of the one or more communications. The viewpoint module **213** determines the narrative viewpoint of the various data elements based on the determination of the current narrative viewpoint of the data elements by the grammar module **203**. In one embodiment, the summarizer platform **103** can be set between three different narrative viewpoints: first person, second person and third person. By way of example, a first-person summary refers to the user as "I," such as "I am scheduled to attend the April 16 meeting." The first-person summary is generated in the natural language as if the summary is the user's own thoughts, for example as if the user is reading the summary to himself or herself. The second-person summary refers to the user as "You," such as "You are scheduled to attend the April 16 meeting." The third-person summary refers to the user by name, such as "Bob Doe is scheduled to attend the April 16 meeting." The second-person and third-person summaries are generated in a natural language form as if a personal assistant is presenting the summary to the user, where the personal assistant is referring directly to the user in the second-person summary and addressing the user by name in the third-person summary. By presenting the summary in the second-person narrative viewpoint, as if a personal assistant is presenting the summary to the user directly, the user can easily comprehend and understand the summary without unnecessary additional thought. To generate the set narrative viewpoint, the viewpoint module **213** interacts with the metadata module **205** and the grammar module **203** to convert the data elements, and generate data elements, according to the set narrative viewpoint.

The summary module **215** interacts with the grammar module **203**, the metadata module **205**, the action module **207**, the context module **209** and the viewpoint module **213** to generate the summaries for the one or more communications. By way of example, the context module **209** determines, based on the context information of the UE **101**, that the generated summary should include approximately half of the language used in the original communication. Based on the relevancy rankings of the data elements by the grammar module **203**, in combination with the relevancy rankings of the metadata module **205**, the summary module **215** selects approximately the top 50% most relevant data elements from the original communication to contain in the summary. The summary module **215** interacts with the grammar module **203** and the viewpoint module **213** to ensure that the data elements used in the generated summary and added to the summary are either already in the correct narrative viewpoint or are converted into the correct narrative viewpoint. The summary module **215** also inserts any prompt generated by the action module **207** in the generated summary to complete the formation of the summary.

The text/speech module **217** has, in one embodiment, two roles. In one role, the text/speech module **217** converts the text of the generated summary into speech so that the summary can be presented to the user in the form of an audio message. In the other role, the text/speech module **217** converts the audio of one or more incoming communication into text for processing by the other modules of the summarizer platform **103**. For example, a voicemail is left on the user's cell phone because the user is busy driving and could not answer a phone call. In generating the summary with the summarizer platform **103**, the text/speech module **217** converts the voicemail into a text string for further processing by the summarizer platform **103**. In one embodiment, the text/speech module **217** only acts as a text-to-speech synthesizer for converting the one or more summaries into audio messages and does not convert one or more audio communications into text.

The communication module **219** presents the one or more generated summaries to the user. In one embodiment, the communication module **219** presents the one or more summaries as one or more audio messages using the text/speech module **217** to synthesize the audio messages. In one embodiment, the communication module **219** presents the one or more summaries as one or more messages displayed on the screen of the UE **101** and not in the form of audio messages. In one embodiment, the communication module **219** presents the one or more summaries as both one or more messages displayed on the screen of the UE **101** and one or more audio messages using the text/speech module **217** to synthesizer.

FIG. **3** is a flowchart of a process for summarizing communications, according to one embodiment. In one embodiment, the summarizer platform **103** performs the process **300** and is implemented in, for instance, a chip set including a processor and a memory as shown in FIG. **8**. In step **301**, the summarizer platform **103** receives one or more communications. In one embodiment, the communications can be in the form of audio communications and textual communications. For example, the one or more communications can be voicemails, SMS messages, MMS messages with text, e-mails, etc. In one embodiment, the communications can also include non-traditional communications that none-the-less have language in the form of audio or text, such as instructions from an instruction manual, newspapers, magazines, books, radio broadcasts, books on tape, etc. In one embodiment, the summarizer platform **103** also generates one or more summaries of one or more attachments to the communications. For example, one communication can be a brief e-mail that refers the user to a long document attached to the e-mail. The summarizer platform **103** can also summarizes the long document that is attached to the e-mail and which was the primary information contained in the e-mail. In one embodiment, the summarizer platform **103** stores one or more communications prior to processing the communications to create summaries for one or more of the communications at a later time. In one embodiment, the summarizer platform **103** processes each communication substantially immediately after receiving the communication.

In step **303**, the summarizer platform **103** checks the context module **209** for context information associated with the UE **101**, the user of the UE **101**, or a combination thereof to determine whether the context of the UE **101**, the user of the UE **101**, or the combination thereof requires summaries of the one or more communications. By way of example, as discussed above with respect to the context module **209**, if the UE **101** is currently running a navigation application **111** that has an active route guidance, the context module **209** of the summarizer platform **103** determines to generate one or more

summaries of one or more communications that are received at the UE **101** to distract the user a little as possible. In one embodiment, the determination in step **303** can be one of on or off. For example, either the context information of the UE **101**, the user of the UE **101**, or a combination thereof is such that either communications should be summarized or not. In one embodiment, the determination at step **303** can be both a determination of whether summaries should be generated as well as an approximation of the amount of the original information and/or language from the one or more communications that are contained in the summary. For example, if the context information indicates that little to no distraction is required, the summarizer platform **103** can generate short messages that contain approximately less than 25% of the information and/or language of the original one or more communications. If the context information indicates that medium distractions can be passed to the user, the summarizer platform **103** can generate medium to long messages that contain approximately 50% to 75% of the information and/or language of the original one or more communications. In one embodiment, the if the context information indicates that little to no distraction is required, the summarizer platform **103** can generate summaries for all of the incoming communications. If the context information indicates that medium distractions can be passed to the user, the summarizer platform **103** can pass low distraction communications to the user without generating summaries and generate summaries for high distraction communications.

In step **305**, the summarizer platform **103** determines whether the one more communications are audio or textual communications. In one embodiment, if one or more of the communications are audio, the process **300** proceeds to step **307**. If one or more of the communications are textual, or all of the communications are textual, the process also proceeds to step **309**, or proceeds to step **309** without also proceeding to step **307**, respectively. In one embodiment, where the summarizer platform **103** accepts only textual communications, step **305** is removed.

In step **307**, the summarizer platform **103** converts the audio communications into textual communications for further processing by the process **300**. The summarizer platform **103** converts the audio communications to text using conventional speech-to-text synthesizers. In one embodiment, where the summarizer platform **103** accepts only textual communications, step **307** is removed.

In step **309**, the summarizer platform **103** parses the one or more communications into various data elements using the parser module **201**. The various data elements can be, for example, sentences of the one or more communications and/or subjects, verbs and objects within the sentences. By parsing the one or more communications, the summarizer platform **103** is able to decompose the text of the one or more communications into basic grammar pieces that are later analyzed in the process **300** to generate the one or more summaries. In one embodiment, the parser module **201** in the summarizer platform **103** also has the ability to translate the one or more communications into one or more different languages using conventional translation processes. For example, a communication can be received in Spanish and parsed into English for analysis and generation of the one or more summaries.

In step **311**, the summarizer platform **103** analyzes the various data elements generated from step **309** using the grammar module **203** discussed above. By way of example, the grammar module **203** ranks the data elements and determines the semantics of the data elements in the communication to determine how the data elements used in the generated summary should be modified to correspond to the desired narrative viewpoint and the various relevancy rankings of the data elements. Using one or more grammar analyzers, the summarizer platform **103** determines the relevancy of the data elements by, for example, determining the frequency at which the data elements appear, with a higher relevancy given to data elements that have a higher frequency. By way of example, a name repeated throughout one communication is given a high relevancy rating because it is probably important to include the name in the summary, at least based on the frequency. The summarizer platform **103** can also determine relevancy of the data elements by, for example, determining the relationships between the data elements, with a higher relevancy given to data elements that share relationships with other data elements that have a high relevancy. By way of example, a subject or object that shares a relationship with a subject or object that appears repeatedly in the one or more communications is given a high relevancy because it is probably related to the relevancy of the subject or object that also has a high relevancy rating. The summarizer platform **103** can also determine relevancy of the data elements by, for example, determining the definitions of the data elements, with certain definitions given higher relevancy than other definitions. By determining the relevancy information of the various data elements, the summarizer platform **103** is able to filter the one or more communications to filter out what data elements are not important enough to include in the summary and what data elements are important enough to include in the summary, at least based in part on the grammar analysis.

In step **313**, the summarizer platform **103** compares the various data elements with metadata stored in, for example, the metadata storage **113**. As discussed above, the metadata can include various information, such as information from a contacts list, an address book, a calendar application, a client list, a company directory, an Internet phonebook, etc. The summarizer platform **103** compares the various data elements with the metadata to determine relevancy information that is used alone or in combination with the relevancy information generated from the grammar module **203**. By way of example, e-mail addresses listed in an e-mail are compared to metadata to gather information regarding the individuals associated with the emails. Thus, if an e-mail is sent to Bob Doe from Jim John, in step **313** the summarizer platform **103** compares the e-mail address of Jim John with the address book or contacts list for Bob Doe and determines that Jim John is Bob Doe's manager. That the e-mail is sent from a manager makes the data element of "Jim John" associated with the e-mail address relevant and more likely to be included in the summary. If, for example, the e-mail is from a party that is not recognized in the metadata, chances are the data element associated with the party is not relevant and the communication could be, for example, SPAM. Generating relevancy information by comparing the various data elements with metadata allows the summarizer platform **103** to filter the various data elements to determine which data elements are included in the summary. Comparing the data elements to the metadata can also determine relevant terms that should be included in the summary that the grammar analysis alone would not necessarily determine relevant based on, for example, the frequency information, the relationship information and/or the definition information.

In addition to determining additional relevancy information in step **313**, the summarizer platform **103** includes information generated from the metadata in the one or more generated summaries to provide greater information to the user. For example, instead of merely referring to the sender's name in the case of an e-mail, the summarizer platform **103** can

include the sender's relationship to the user, such as "Jim John, your manager" in the summary. The inclusion of "your manager" is based, in part, on the summarizer platform **103** determining from the metadata that Jim John is Bob Doe's manager and determining that including the term "manager" in the summary is relevant. This allows the user to place the information contained in the one or more communication in a better context. Further, the summarizer platform **103** can be set to summarize all of the one or more communications in terms of the subject of the communications. By way of example, the one or more communications are summarized regardless of the subject of the one or more communications. In one embodiment, the summarizer platform **103** can be set to summarize only parts of the one or more communications that pertain to the user either individually or in a group. For example, if, when comparing the metadata to the various data elements, the summarizer platform **103** determines that a reference to a group of individuals discussed in the one or more communications includes the user, the summarizer platform **103** may include reference to the portion of the one or more communications that concerns the group because it most likely concerns the individual and disregard the other portions of the one or more communications that do not concern the group or the user individually. In one embodiment, the summarizer platform **103** can be set to summarize only parts of the one or more communications that pertain to the user specifically. By way of example, the summarizer platform **103** will summarize only the portions of the one or more communications that pertain specifically to the user. This allows the user to control the specificity of the summarizes and further reduce the information overload felt by the user by disregarding and not having to comprehend information within the one or more communications that does not concern the user.

In step **315**, the summarizer platform **103** compares the various data elements with metadata stored in, for example, the metadata storage **113**. In this step, the summarizer platform **103** compares the various data elements with the metadata to determine viewpoint transformation information to provide a summary with a more natural language flow. By way of example, if an e-mail address is sent to Jim John, references to the name Jim John within the e-mail are associated with the various narrative viewpoints of language, such as first person, second person and third person. Thus, in the summary, rather than including the form of the name Jim John that is actually used in the communication, the name Jim John can be replaced with, for example, "I," "you" or another form of the name as determined by the summarizer platform **103** and/or set by the user. By being able to customize the narrative viewpoint of information presented in the summary, the summarizer platform **103** can create a summary with a more natural language. In situations where references to the user's name in the summary are changed to, for example, "you," the summary is presented to the user as if a personal assistant generated the summary specifically for the user and allows the user to process better the information in the summary. As a further example, for the situation above where the summarizer platform **103** includes metadata in the summary, the narrative viewpoint of the above example "Jim John, your manager" can be changed to "Jim John, my manager" or "Jim John, Bob Doe's manager" depending on the set narrative viewpoint. By changing the narrative viewpoint of the summary, the summarizer platform **103** can provide whatever narrative viewpoint is preferred by the user. Although the above examples pertain to only several words, the summarizer platform **103** generates the entire one or more summaries in the set narrative viewpoint so that all of the one or more summaries are entirely in the same narrative viewpoint.

In step **317**, the summarizer platform **103** determines whether one or more actions are required based on the information contained in the one or more communications. In one embodiment, the summarizer platform **103** determines that an action is required based on one or more sentences ending in a question mark and/or based on one or more sentences being phrased as a question. In response, the summarizer platform **103** determines that the information contained in the one or more sentences requires action from the user. In one embodiment, the summarizer platform **103** determines that the one or more communications require an action based on the analysis of the grammar. In one embodiment, the summarizer platform **103** determines that an action is required based on any one or more of the grammar analysis, the metadata analysis and whether one or more sentences end in a question mark or are phrased as a question. If the summarizer platform **103** determines that one or more actions are required, the process **300** proceeds to step **319**. If the summarizer platform **103** determines that the one or more communications do not require an action, the process **300** proceeds to step **321**.

In step **319**, the summarizer platform **103** generates one or more prompts that are included in the summary. By way of example, if one or more of the communications included a question regarding whether the user will be able to attend a function on a certain date, the summarizer platform **103** generates a prompt regarding whether the user wants to RSVP to the function on the date. In the same situation, the summarizer platform **103** generates a prompt regarding whether the user wants to add the function on the date to the user's calendar. Inclusion of the prompt adds to the functionality of the summary and to the ease of the information overload felt by the user receiving a multitude of communications. Prompts generated by the summarizer platform **103** and included in the summary can relate to any type of information and can interact with any one or more applications **111** running on the UE **101** or with any one or more service providers **109** running one or more services **107**. The prompts generated by the summarizer platform **103** are generated and/or presented in the same narrative viewpoint as the other portions of the one or more summaries.

In step **321**, the summarizer platform **103** determines the set proportion of information that is contained in the one or more communications that should be contained in the one or more summaries. By way of example, if the one or more communications contained approximately 100 words, and the set proportion for the summaries is approximately 50%, the one or more summaries would include approximately 50 words taking into account the capacity to reduce the one or more communications to approximately 50 words, as discussed above. By setting the proportion of the summary amount, the user can control the amount of potential information loss and/or the specificity of the summary. The set proportion of the one or more summaries compared to the one or more communications adds to filtering of the one or more communications for determining what information is contained in the one or more summaries. In one embodiment, all of the original words used in the one or more communications are used in determining the proportion amount. In one embodiment, only the subject, verbs and objections analyzed by the grammar module **203** are considered in determining the proportion amount.

In step **323**, the summarizer platform **103** generates one or more summaries based on, for example, the relevancy information generated from the grammar analysis and the metadata analysis, and the additional terms based on the metadata

information. The one or more summaries are also generated according to the set proportion. The summarizer platform **103** uses algorithms that take into account the relevancy information compared to the proportion amount to filter out the terms in the original one or more communications that are not included in the summary.

In step **325**, the summarizer platform **103** transforms the one or more summaries into the set narrative viewpoint, as discussed above, to give the proper sense and desired semantics to the final one or more summaries. In one example, the relevant terms from the one or more communications that are included in a summary are, "Jim John wants Bob Doe to start prioritizing what the team needs to concentrate on. It's urgent." In one embodiment, if the summarizer platform **103** is set to present the summary in the second-person narrative viewpoint to sound as if a personal assistant is presenting the summary to the user, the resulting summary after narrative viewpoint transformation would be, including a prompt based on the language in the original one or more communications, "You received an email from Jim John, your manager, and he wants you to prioritize what the teams needs to concentrate on. Would you like to add this to your TODO list?" Presenting the summary in a set narrative viewpoint, according to the desired semantics, allows the user to get a better sense of the information contained in the summary.

In step **327**, the summarizer platform **103** presents the one or more summaries according to the set method of presentation. In one embodiment, the summarizer platform **103** presents the one or more summaries for presentation on the display of the UE **101**. In one embodiment, the summarizer platform **103** presents the one or more summaries to a text-to-speech synthesizer and the one or more summaries are converted into audio messages that are then "read" to the user as if a personal assistant is reading a summary of the one or more communications to the user. The text-to-speech synthesizers can be any conventional text-to-speech synthesizer. In one embodiment, the summarizer platform **103** presents the one or more summaries on the display of the UE **101** and as audio messages read to the user.

FIG. **4** is a diagram of a user interface of a UE **101** utilized in the process **300** of FIG. **3**, according to one embodiment. Indicator **401** illustrates the user interface of the UE **101** when configuring the summarizer platform **103** for summarizing one or more communications. As seen in FIG. **4**, indicators **403**, **405** and **407** allow for navigation through the user interface of the UE **101**. Indicator **409** allows the user to configure whether the summarizer platform **103** summarizes one or more communications by turning on or off the summarizer platform **103**. In one embodiment, indicator **409** also allows to control the summarizer platform **103** based on the context information, such that "LOW" requires low levels of disturbance such that all communications are summarized, "MED." allows medium levels of disturbance such that medium to long communications are summarized and short communications are presented to the user without summarization, and "HIGH" allows high levels of disturbance such that only long communications are summarized and short to medium communications are passed to the user without summarization. Additionally, indicator **409** indicates that the disturbance level can be set to automatic and then determined based on the context information of the UE **101**, the user of the UE **101** or a combination thereof.

Indicator **411** allows the user to set the proportion of the language used in the one or more summaries to between, for example, approximately 25% to 75% of the original language of the one or more communications. Indicator **411** also allows the user to set the summarizer platform **103** to automatically determine the approximate proportion of the one or more summaries in comparison to the original one or more communications according to the "AUTO." setting.

Indicator **413** allows the user to set the specificity of the one or more summaries of the one or more communications. In one embodiment, "OFF" turns off the specificity option, "GROUP" excludes any information contained in the original one or more communications that does not refer to the user either individually or in a group, and "USER" excludes any information contained in the original one or more communications that does not refer to the user individually. By using the indicator **413**, the user can narrow down the summaries to only information that pertains indirectly (e.g., by way of a group) and/or directly to the user.

Indicator **415** allows the user to set the narrative viewpoint of the summary according to, for example, either the first-person, second-person or third-person narrative viewpoints, depending on the preference of the user. Indicator **415** also, for example, allows the user to let the summarizer platform **103** determine the narrative viewpoint automatically based on the information contained in the original one or more communications.

FIG. **5** is a diagram of a user interface of a UE **101** utilized in the process **300** of FIG. **3**, according to one embodiment. Indicator **501** illustrates the user interface of the UE **101** for an incoming communication. By way of example, the incoming communication illustrated by indicator **501** is an e-mail directed to Bob Doe from Jim John. In one embodiment, the incoming communication is summarized after the user of the UE **101** selects indicator **503**. In one embodiment, the incoming communication is summarized automatically by the summarizer platform **103** after the incoming message is displayed on, for example, the UE **101**. In one embodiment, the incoming communication is summarized automatically by the summarizer platform **103** without displaying the incoming communication on the display of the UE **101**. In one embodiment, as discussed above, the determination of whether to automatically generate the summary is based, at least in part, on the context information of the UE **101**, the user of the UE **101** or a combination thereof. In one embodiment, the UE **101** is set to interact with the user through a voice-operated user interface. Accordingly, indicator **503** is absent from indicator **501**. Rather, the UE **101** plays an audio message indicating that the incoming communication was received and prompts the user to listen to a summary of the incoming communication, as illustrated by indicator **505**. In one embodiment, the UE **101** plays an audio message indicating that the incoming communication was received and automatically generates a summary of the incoming communication without prompting the user.

FIG. **6**A is a diagram of a user interface of a UE **101** utilized in the process **300** of FIG. **3**, according one embodiment. Indicator **601** illustrates the user interface of the UE **101** displaying the summary of, for example, the communication illustrated in FIG. **5**. In one embodiment, the summarizer platform **103** presents the summary of the communication by displaying the summary on the display of the UE **101** illustrated by indictor **611**. As illustrated, the summary is presented to the user in the second-person narrative viewpoint as evidenced by references to the user being designed by, for example, the term "you." Metadata information is also included in the summary as evidenced by the reference to Jim being followed by "your manager." Accordingly, the user is able to quickly and efficiently understand the contents of the original message and act on the actions contained in the original message in an efficient manner with minimal to no distraction to a primary task, such as driving a car.

Further, indicator **609** illustrates a prompt generated in response to the communication. By way of example, the summarizer platform **103** determined a prompt of "Add 'Prioritize for Meeting' to your calendar" in response to receiving the communication. Using indicators **603**, **605** and/or **607**, the user of the UE **101** can accept the prompt, edit the prompt, or decline the prompt, respectively.

FIG. **6**B is a diagram of a voice-operated user interface of a UE **101** utilized in the process **300** of FIG. **3**, according one embodiment. Indicator **619** illustrates the voice-operated user interface of the UE **101** generating an audio message **621** in response to, for example, the communication illustrated in FIG. **5**. The audio message **621** includes a summary **625** of the communication and a prompt **623** generated in response to the communication. As discussed above, the summary **625** is presented to the user in the second-person narrative viewpoint because reference to the user is designated by, for example, the term "you." Metadata information is also included in the summary because reference to Jim is followed by "your manager." Accordingly, the user is able to quickly and efficiently understand the contents of the original message and act on the actions contained in the original message with minimal to no distraction to a primary task, such as driving a car. Because the summary **625** is presented to the user as an audio message **621**, the user can focus even more attention to a primary task, such as driving a car, without the need to look at the screen and read the summary. In response to the prompt played as an audio message, the user of the UE **101** can respond with a verbal command recognizable by an application **111** running one the UE **101** or by a service **107** running on one or more of the service providers **109** to respond to the prompt and perform the same functions of the indicators **603**, **605** and/or **607** discussed above in reference to FIG. **6**A. By presenting the summary and the prompt as a audio message, and allowing the user respond to the prompt with a verbal command, the summarizer platform **103** permits the user to focus on a primary task, such as driving, while still receiving and responding to his or her communications.

one embodiment, indicator **619** also includes a summary playback indicator **627** that illustrates, for example, the length of the audio message **621**. Indictor **619** also includes indicators **613**, **615** and **617** that allow the user rewind, replay or fast forward the audio message, respectively. In addition, verbal commands can be used instead of physically selecting the indicators **613**, **615** and **617** as part of the voice-activated user interface.

Although FIGS. **6**A and **6**B illustrate separate user interfaces utilized in the process **300** of FIG. **3**, the user interfaces can be combined in any desired combination such that a user operate the UE **101** graphically and verbally.

The processes described herein for summarizing communications may be advantageously implemented via software, hardware, firmware or a combination of software and/or firmware and/or hardware. For example, the processes described herein, may be advantageously implemented via processor(s), Digital Signal Processing (DSP) chip, an Application Specific Integrated Circuit (ASIC), Field Programmable Gate Arrays (FPGAs), etc. Such exemplary hardware for performing the described functions is detailed below.

FIG. **7** illustrates a computer system **700** upon which an embodiment of the invention may be implemented. Although computer system **700** is depicted with respect to a particular device or equipment, it is contemplated that other devices or equipment (e.g., network elements, servers, etc.) within FIG. **7** can deploy the illustrated hardware and components of system **700**. Computer system **700** is programmed (e.g., via computer program code or instructions) to summarize communications as described herein and includes a communication mechanism such as a bus **710** for passing information between other internal and external components of the computer system **700**. Information (also called data) is represented as a physical expression of a measurable phenomenon, typically electric voltages, but including, in other embodiments, such phenomena as magnetic, electromagnetic, pressure, chemical, biological, molecular, atomic, sub-atomic and quantum interactions. For example, north and south magnetic fields, or a zero and non-zero electric voltage, represent two states (0, 1) of a binary digit (bit). Other phenomena can represent digits of a higher base. A superposition of multiple simultaneous quantum states before measurement represents a quantum bit (qubit). A sequence of one or more digits constitutes digital data that is used to represent a number or code for a character. In some embodiments, information called analog data is represented by a near continuum of measurable values within a particular range. Computer system **700**, or a portion thereof, constitutes a means for performing one or more steps of summarizing communications.

A bus **710** includes one or more parallel conductors of information so that information is transferred quickly among devices coupled to the bus **710**. One or more processors **702** for processing information are coupled with the bus **710**.

A processor (or multiple processors) **702** performs a set of operations on information as specified by computer program code related to summarizing communications. The computer program code is a set of instructions or statements providing instructions for the operation of the processor and/or the computer system to perform specified functions. The code, for example, may be written in a computer programming language that is compiled into a native instruction set of the processor. The code may also be written directly using the native instruction set (e.g., machine language). The set of operations include bringing information in from the bus **710** and placing information on the bus **710**. The set of operations also typically include comparing two or more units of information, shifting positions of units of information, and combining two or more units of information, such as by addition or multiplication or logical operations like OR, exclusive OR (XOR), and AND. Each operation of the set of operations that can be performed by the processor is represented to the processor by information called instructions, such as an operation code of one or more digits. A sequence of operations to be executed by the processor **702**, such as a sequence of operation codes, constitute processor instructions, also called computer system instructions or, simply, computer instructions. Processors may be implemented as mechanical, electrical, magnetic, optical, chemical or quantum components, among others, alone or in combination.

Computer system **700** also includes a memory **704** coupled to bus **710**. The memory **704**, such as a random access memory (RAM) or any other dynamic storage device, stores information including processor instructions for summarizing communications. Dynamic memory allows information stored therein to be changed by the computer system **700**. RAM allows a unit of information stored at a location called a memory address to be stored and retrieved independently of information at neighboring addresses. The memory **704** is also used by the processor **702** to store temporary values during execution of processor instructions. The computer system **700** also includes a read only memory (ROM) **706** or any other static storage device coupled to the bus **710** for storing static information, including instructions, that is not changed by the computer system **700**. Some memory is composed of volatile storage that loses the information stored thereon when power is lost. Also coupled to bus **710** is a

non-volatile (persistent) storage device **708**, such as a magnetic disk, optical disk or flash card, for storing information, including instructions, that persists even when the computer system **700** is turned off or otherwise loses power.

Information, including instructions for summarizing communications, is provided to the bus **710** for use by the processor from an external input device **712**, such as a keyboard containing alphanumeric keys operated by a human user, or a sensor. A sensor detects conditions in its vicinity and transforms those detections into physical expression compatible with the measurable phenomenon used to represent information in computer system **700**. Other external devices coupled to bus **710**, used primarily for interacting with humans, include a display device **714**, such as a cathode ray tube (CRT), a liquid crystal display (LCD), a light emitting diode (LED) display, an organic LED (OLED) display, a plasma screen, or a printer for presenting text or images, and a pointing device **716**, such as a mouse, a trackball, cursor direction keys, or a motion sensor, for controlling a position of a small cursor image presented on the display **714** and issuing commands associated with graphical elements presented on the display **714**. In some embodiments, for example, in embodiments in which the computer system **700** performs all functions automatically without human input, one or more of external input device **712**, display device **714** and pointing device **716** is omitted.

In the illustrated embodiment, special purpose hardware, such as an application specific integrated circuit (ASIC) **720**, is coupled to bus **710**. The special purpose hardware is configured to perform operations not performed by processor **702** quickly enough for special purposes. Examples of ASICs include graphics accelerator cards for generating images for display **714**, cryptographic boards for encrypting and decrypting messages sent over a network, speech recognition, and interfaces to special external devices, such as robotic arms and medical scanning equipment that repeatedly perform some complex sequence of operations that are more efficiently implemented in hardware.

Computer system **700** also includes one or more instances of a communications interface **770** coupled to bus **710**. Communication interface **770** provides a one-way or two-way communication coupling to a variety of external devices that operate with their own processors, such as printers, scanners and external disks. In general the coupling is with a network link **778** that is connected to a local network **780** to which a variety of external devices with their own processors are connected. For example, communication interface **770** may be a parallel port or a serial port or a universal serial bus (USB) port on a personal computer. In some embodiments, communications interface **770** is an integrated services digital network (ISDN) card or a digital subscriber line (DSL) card or a telephone modem that provides an information communication connection to a corresponding type of telephone line. In some embodiments, a communication interface **770** is a cable modem that converts signals on bus **710** into signals for a communication connection over a coaxial cable or into optical signals for a communication connection over a fiber optic cable. As another example, communications interface **770** may be a local area network (LAN) card to provide a data communication connection to a compatible LAN, such as Ethernet. Wireless links may also be implemented. For wireless links, the communications interface **770** sends or receives or both sends and receives electrical, acoustic or electromagnetic signals, including infrared and optical signals, that carry information streams, such as digital data. For example, in wireless handheld devices, such as mobile telephones like cell phones, the communications interface **770** includes a radio band electromagnetic transmitter and receiver called a radio transceiver. In certain embodiments, the communications interface **770** enables connection to the communication network **105** for summarizing communications to the UE **101**.

The term "computer-readable medium" as used herein refers to any medium that participates in providing information to processor **702**, including instructions for execution. Such a medium may take many forms, including, but not limited to computer-readable storage medium (e.g., non-volatile media, volatile media), and transmission media. Non-transitory media, such as non-volatile media, include, for example, optical or magnetic disks, such as storage device **708**. Volatile media include, for example, dynamic memory **704**. Transmission media include, for example, twisted pair cables, coaxial cables, copper wire, fiber optic cables, and carrier waves that travel through space without wires or cables, such as acoustic waves and electromagnetic waves, including radio, optical and infrared waves. Signals include man-made transient variations in amplitude, frequency, phase, polarization or other physical properties transmitted through the transmission media. Common forms of computer-readable media include, for example, a floppy disk, a flexible disk, hard disk, magnetic tape, any other magnetic medium, a CD-ROM, CDRW, DVD, any other optical medium, punch cards, paper tape, optical mark sheets, any other physical medium with patterns of holes or other optically recognizable indicia, a RAM, a PROM, an EPROM, a FLASH-EPROM, an EEPROM, a flash memory, any other memory chip or cartridge, a carrier wave, or any other medium from which a computer can read. The term computer-readable storage medium is used herein to refer to any computer-readable medium except transmission media.

Logic encoded in one or more tangible media includes one or both of processor instructions on a computer-readable storage media and special purpose hardware, such as ASIC **720**.

Network link **778** typically provides information communication using transmission media through one or more networks to other devices that use or process the information. For example, network link **778** may provide a connection through local network **780** to a host computer **782** or to equipment **784** operated by an Internet Service Provider (ISP). ISP equipment **784** in turn provides data communication services through the public, world-wide packet-switching communication network of networks now commonly referred to as the Internet **790**.

A computer called a server host **792** connected to the Internet hosts a process that provides a service in response to information received over the Internet. For example, server host **792** hosts a process that provides information representing video data for presentation at display **714**. It is contemplated that the components of system **700** can be deployed in various configurations within other computer systems, e.g., host **782** and server **792**.

At least some embodiments of the invention are related to the use of computer system **700** for implementing some or all of the techniques described herein. According to one embodiment of the invention, those techniques are performed by computer system **700** in response to processor **702** executing one or more sequences of one or more processor instructions contained in memory **704**. Such instructions, also called computer instructions, software and program code, may be read into memory **704** from another computer-readable medium such as storage device **708** or network link **778**. Execution of the sequences of instructions contained in memory **704** causes processor **702** to perform one or more of the method

steps described herein. In alternative embodiments, hardware, such as ASIC **720**, may be used in place of or in combination with software to implement the invention. Thus, embodiments of the invention are not limited to any specific combination of hardware and software, unless otherwise explicitly stated herein.

The signals transmitted over network link **778** and other networks through communications interface **770**, carry information to and from computer system **700**. Computer system **700** can send and receive information, including program code, through the networks **780**, **790** among others, through network link **778** and communications interface **770**. In an example using the Internet **790**, a server host **792** transmits program code for a particular application, requested by a message sent from computer **700**, through Internet **790**, ISP equipment **784**, local network **780** and communications interface **770**. The received code may be executed by processor **702** as it is received, or may be stored in memory **704** or in storage device **708** or any other non-volatile storage for later execution, or both. In this manner, computer system **700** may obtain application program code in the form of signals on a carrier wave.

Various forms of computer readable media may be involved in carrying one or more sequence of instructions or data or both to processor **702** for execution. For example, instructions and data may initially be carried on a magnetic disk of a remote computer such as host **782**. The remote computer loads the instructions and data into its dynamic memory and sends the instructions and data over a telephone line using a modem. A modem local to the computer system **700** receives the instructions and data on a telephone line and uses an infra-red transmitter to convert the instructions and data to a signal on an infra-red carrier wave serving as the network link **778**. An infrared detector serving as communications interface **770** receives the instructions and data carried in the infrared signal and places information representing the instructions and data onto bus **710**. Bus **710** carries the information to memory **704** from which processor **702** retrieves and executes the instructions using some of the data sent with the instructions. The instructions and data received in memory **704** may optionally be stored on storage device **708**, either before or after execution by the processor **702**.

FIG. **8** illustrates a chip set or chip **800** upon which an embodiment of the invention may be implemented. Chip set **800** is programmed to summarize communications as described herein and includes, for instance, the processor and memory components described with respect to FIG. **7** incorporated in one or more physical packages (e.g., chips). By way of example, a physical package includes an arrangement of one or more materials, components, and/or wires on a structural assembly (e.g., a baseboard) to provide one or more characteristics such as physical strength, conservation of size, and/or limitation of electrical interaction. It is contemplated that in certain embodiments the chip set **800** can be implemented in a single chip. It is further contemplated that in certain embodiments the chip set or chip **800** can be implemented as a single "system on a chip." It is further contemplated that in certain embodiments a separate ASIC would not be used, for example, and that all relevant functions as disclosed herein would be performed by a processor or processors. Chip set or chip **800**, or a portion thereof, constitutes a means for performing one or more steps of providing user interface navigation information associated with the availability of functions. Chip set or chip **800**, or a portion thereof, constitutes a means for performing one or more steps of summarizing communications.

In one embodiment, the chip set or chip **800** includes a communication mechanism such as a bus **801** for passing information among the components of the chip set **800**. A processor **803** has connectivity to the bus **801** to execute instructions and process information stored in, for example, a memory **805**. The processor **803** may include one or more processing cores with each core configured to perform independently. A multi-core processor enables multiprocessing within a single physical package. Examples of a multi-core processor include two, four, eight, or greater numbers of processing cores. Alternatively or in addition, the processor **803** may include one or more microprocessors configured in tandem via the bus **801** to enable independent execution of instructions, pipelining, and multithreading. The processor **803** may also be accompanied with one or more specialized components to perform certain processing functions and tasks such as one or more digital signal processors (DSP) **807**, or one or more application-specific integrated circuits (ASIC) **809**. A DSP **807** typically is configured to process real-world signals (e.g., sound) in real time independently of the processor **803**. Similarly, an ASIC **809** can be configured to performed specialized functions not easily performed by a more general purpose processor. Other specialized components to aid in performing the inventive functions described herein may include one or more field programmable gate arrays (FPGA) (not shown), one or more controllers (not shown), or one or more other special-purpose computer chips.

In one embodiment, the chip set or chip **800** includes merely one or more processors and some software and/or firmware supporting and/or relating to and/or for the one or more processors.

The processor **803** and accompanying components have connectivity to the memory **805** via the bus **801**. The memory **805** includes both dynamic memory (e.g., RAM, magnetic disk, writable optical disk, etc.) and static memory (e.g., ROM, CD-ROM, etc.) for storing executable instructions that when executed perform the inventive steps described herein to summarize communications. The memory **805** also stores the data associated with or generated by the execution of the inventive steps.

FIG. **9** is a diagram of exemplary components of a mobile terminal (e.g., handset) for communications, which is capable of operating in the system of FIG. **1**, according to one embodiment. In some embodiments, mobile terminal **901**, or a portion thereof, constitutes a means for performing one or more steps of summarizing communications. Generally, a radio receiver is often defined in terms of front-end and back-end characteristics. The front-end of the receiver encompasses all of the Radio Frequency (RF) circuitry whereas the back-end encompasses all of the base-band processing circuitry. As used in this application, the term "circuitry" refers to both: (1) hardware-only implementations (such as implementations in only analog and/or digital circuitry), and (2) to combinations of circuitry and software (and/or firmware) (such as, if applicable to the particular context, to a combination of processor(s), including digital signal processor(s), software, and memory(ies) that work together to cause an apparatus, such as a mobile phone or server, to perform various functions). This definition of "circuitry" applies to all uses of this term in this application, including in any claims. As a further example, as used in this application and if applicable to the particular context, the term "circuitry" would also cover an implementation of merely a processor (or multiple processors) and its (or their) accompanying software/or firmware. The term "circuitry" would also cover if applicable to the particular context, for example, a baseband integrated circuit

or applications processor integrated circuit in a mobile phone or a similar integrated circuit in a cellular network device or other network devices.

Pertinent internal components of the telephone include a Main Control Unit (MCU) **903**, a Digital Signal Processor (DSP) **905**, and a receiver/transmitter unit including a microphone gain control unit and a speaker gain control unit. A main display unit **907** provides a display to the user in support of various applications and mobile terminal functions that perform or support the steps of summarizing communications. The display **907** includes display circuitry configured to display at least a portion of a user interface of the mobile terminal (e.g., mobile telephone). Additionally, the display **907** and display circuitry are configured to facilitate user control of at least some functions of the mobile terminal. An audio function circuitry **909** includes a microphone **911** and microphone amplifier that amplifies the speech signal output from the microphone **911**. The amplified speech signal output from the microphone **911** is fed to a coder/decoder (CODEC) **913**.

A radio section **915** amplifies power and converts frequency in order to communicate with a base station, which is included in a mobile communication system, via antenna **917**. The power amplifier (PA) **919** and the transmitter/modulation circuitry are operationally responsive to the MCU **903**, with an output from the PA **919** coupled to the duplexer **921** or circulator or antenna switch, as known in the art. The PA **919** also couples to a battery interface and power control unit **920**.

In use, a user of mobile terminal **901** speaks into the microphone **911** and his or her voice along with any detected background noise is converted into an analog voltage. The analog voltage is then converted into a digital signal through the Analog to Digital Converter (ADC) **923**. The control unit **903** routes the digital signal into the DSP **905** for processing therein, such as speech encoding, channel encoding, encrypting, and interleaving. In one embodiment, the processed voice signals are encoded, by units not separately shown, using a cellular transmission protocol such as enhanced data rates for global evolution (EDGE), general packet radio service (GPRS), global system for mobile communications (GSM), Internet protocol multimedia subsystem (IMS), universal mobile telecommunications system (UMTS), etc., as well as any other suitable wireless medium, e.g., microwave access (WiMAX), Long Term Evolution (LTE) networks, code division multiple access (CDMA), wideband code division multiple access (WCDMA), wireless fidelity (WiFi), satellite, and the like, or any combination thereof.

The encoded signals are then routed to an equalizer **925** for compensation of any frequency-dependent impairments that occur during transmission though the air such as phase and amplitude distortion. After equalizing the bit stream, the modulator **927** combines the signal with a RF signal generated in the RF interface **929**. The modulator **927** generates a sine wave by way of frequency or phase modulation. In order to prepare the signal for transmission, an up-converter **931** combines the sine wave output from the modulator **927** with another sine wave generated by a synthesizer **933** to achieve the desired frequency of transmission. The signal is then sent through a PA **919** to increase the signal to an appropriate power level. In practical systems, the PA **919** acts as a variable gain amplifier whose gain is controlled by the DSP **905** from information received from a network base station. The signal is then filtered within the duplexer **921** and optionally sent to an antenna coupler **935** to match impedances to provide maximum power transfer. Finally, the signal is transmitted via antenna **917** to a local base station. An automatic gain control (AGC) can be supplied to control the gain of the final stages of the receiver. The signals may be forwarded from there to a remote telephone which may be another cellular telephone, any other mobile phone or a land-line connected to a Public Switched Telephone Network (PSTN), or other telephony networks.

Voice signals transmitted to the mobile terminal **901** are received via antenna **917** and immediately amplified by a low noise amplifier (LNA) **937**. A down-converter **939** lowers the carrier frequency while the demodulator **941** strips away the RF leaving only a digital bit stream. The signal then goes through the equalizer **925** and is processed by the DSP **905**. A Digital to Analog Converter (DAC) **943** converts the signal and the resulting output is transmitted to the user through the speaker **945**, all under control of a Main Control Unit (MCU) **903** which can be implemented as a Central Processing Unit (CPU) (not shown).

The MCU **903** receives various signals including input signals from the keyboard **947**. The keyboard **947** and/or the MCU **903** in combination with other user input components (e.g., the microphone **911**) comprise a user interface circuitry for managing user input. The MCU **903** runs a user interface software to facilitate user control of at least some functions of the mobile terminal **901** to summarize communications. The MCU **903** also delivers a display command and a switch command to the display **907** and to the speech output switching controller, respectively. Further, the MCU **903** exchanges information with the DSP **905** and can access an optionally incorporated SIM card **949** and a memory **951**. In addition, the MCU **903** executes various control functions required of the terminal. The DSP **905** may, depending upon the implementation, perform any of a variety of conventional digital processing functions on the voice signals. Additionally, DSP **905** determines the background noise level of the local environment from the signals detected by microphone **911** and sets the gain of microphone **911** to a level selected to compensate for the natural tendency of the user of the mobile terminal **901**.

The CODEC **913** includes the ADC **923** and DAC **943**. The memory **951** stores various data including call incoming tone data and is capable of storing other data including music data received via, e.g., the global Internet. The software module could reside in RAM memory, flash memory, registers, or any other form of writable storage medium known in the art. The memory device **951** may be, but not limited to, a single memory, CD, DVD, ROM, RAM, EEPROM, optical storage, magnetic disk storage, flash memory storage, or any other non-volatile storage medium capable of storing digital data.

An optionally incorporated SIM card **949** carries, for instance, important information, such as the cellular phone number, the carrier supplying service, subscription details, and security information. The SIM card **949** serves primarily to identify the mobile terminal **901** on a radio network. The card **949** also contains a memory for storing a personal telephone number registry, text messages, and user specific mobile terminal settings.

While the invention has been described in connection with a number of embodiments and implementations, the invention is not so limited but covers various obvious modifications and equivalent arrangements, which fall within the purview of the appended claims. Although features of the invention are expressed in certain combinations among the claims, it is contemplated that these features can be arranged in any combination and order.

What is claimed is:

1. A method comprising facilitating a processing of and/or processing (1) data and/or (2) information and/or (3) at least one signal, the (1) data and/or (2) information and/or (3) at least one signal based, at least in part, on the following:

a processing, by a processor, of one or more telecommunications to generate at least one summary;

a parsing, by the processor, of the one or more telecommunications into one or more data elements;

a determination of metadata associated with the one or more data elements, wherein the metadata is based, at least in part, on information from sources other than the one or more telecommunications, and wherein the at least one summary is based, at least in part, on the one or more data elements, the metadata, or a combination thereof;

a selection of at least one narrative viewpoint;

a transformation, by the processor, of the at least one summary based, at least in part, on the at least one narrative viewpoint; and

a determination to cause, at least in part, a presentation of the transformation for reducing user information overload.

2. A method of claim 1, wherein the (1) data and/or (2) information and/or (3) at least one signal are further based, at least in part, on the following:

a determination of relevancy information of the one or more data elements,

wherein the generating of the at least one summary is based, at least in part, on the relevancy information.

3. A method of claim 2, wherein the (1) data and/or (2) information and/or (3) at least one signal are further based, at least in part, on the following:

a processing of the one or more data elements using at least one grammar analyzer to determine at least a portion of the relevancy information.

4. A method of claim 3, wherein the (1) data and/or (2) information and/or (3) at least one signal are further based, at least in part, on the following:

respective frequencies of the one or more data elements, relationship information among the one or more data elements, one or more definitions of the one or more data elements, or a combination thereof,

wherein the relevancy information is based, at least in part, on the respective frequencies, the relationship information, the one or more definitions, or a combination thereof.

5. A method of claim 2, wherein the (1) data and/or (2) information and/or (3) at least one signal are further based, at least in part, on the following:

a processing of the metadata to determine at least a portion of the relevancy information, one or more other data elements to include in the at least one summary, or a combination thereof.

6. A method of claim 2, wherein the (1) data and/or (2) information and/or (3) at least one signal are further based, at least in part, on the following:

a processing of the metadata to generate the transformation.

7. A method of claim 1, wherein the (1) data and/or (2) information and/or (3) at least one signal are further based, at least in part, on the following:

a processing of the one or more telecommunications, the at least one summary, or a combination thereof to determine one or more related actions; and

an inclusion of the one or more related actions in the at least one summary.

8. A method of claim 7, wherein the (1) data and/or (2) information and/or (3) at least one signal are further based, at least in part, on the following:

a determination of one or more applications, one or more services, or a combination thereof for performing the one or more related actions;

a generation of at least one prompt in the at least one narrative viewpoint to initiate the one or more applications, the one or more services, or a combination thereof; and

an inclusion of the at least one prompt in the at least one summary.

9. A method of claim 1, wherein the processing of the one or more telecommunications includes a determination of which of the one or more telecommunications should be summarized and the presentation of the transformation is via a voice-based user interface.

10. A method of claim 1, wherein the (1) data and/or (2) information and/or (3) at least one signal are further based, at least in part, on the following:

context information associated with at least one recipient of the one or more telecommunications,

wherein an initiation of the processing of the one or more telecommunications is based, at least in part, on the context information.

11. An apparatus comprising:

at least one processor; and

at least one memory including computer program code for one or more programs,

the at least one memory and the computer program code configured to, with the at least one processor, cause the apparatus to perform at least the following,

process and/or facilitate a processing of one or more telecommunications to generate at least one summary;

cause, at least in part, a parsing of the one or more telecommunications into one or more data elements;

determine metadata associated with the one or more data elements, wherein the metadata is based, at least in part, on information from sources other than the one or more telecommunications, and wherein the at least one summary is based, at least in part, on the one or more data elements, the metadata, or a combination thereof;

select at least one narrative viewpoint;

cause, at least in part, a transformation of the at least one summary based, at least in part, on the at least one narrative viewpoint; and

determine to cause, at least in part, a presentation of the transformation for reducing user information overload.

12. An apparatus of claim 11, wherein the apparatus is further caused to:

determine relevancy information of the one or more data elements,

wherein the generating of the at least one summary is based, at least in part, on the relevancy information.

13. An apparatus of claim 12, wherein the apparatus is further caused to:

process and/or facilitate a processing of the one or more data elements using at least one grammar analyzer to determine at least a portion of the relevancy information.

14. An apparatus of claim 13, wherein the apparatus is further caused to:

determine respective frequencies of the one or more data elements, relationship information among the one or more data elements, one or more definitions of the one or more data elements, or a combination thereof,

wherein the relevancy information is based, at least in part, on the respective frequencies, the relationship information, the one or more definitions, or a combination thereof.

15. An apparatus of claim **12**, further comprising:

process and/or facilitate a processing of the metadata to determine at least a portion of the relevancy information, one or more other data elements to include in the at least one summary, or a combination thereof.

16. An apparatus of claim **12**, wherein the apparatus is further caused to:

process and/or facilitate a processing of the metadata to generate the transformation.

17. An apparatus of claim **11**, wherein the apparatus is further caused to:

process and/or facilitate a processing of the one or more telecommunications, the at least one summary, or a combination thereof to determine one or more related actions; and

cause, at least in part, an inclusion of the one or more related actions in the at least one summary.

18. An apparatus of claim **17**, wherein the apparatus is further caused to:

determine one or more applications, one or more services, or a combination thereof for performing the one or more related actions;

cause, at least in part, a generation of at least one prompt to initiate the one or more applications, the one or more services, or a combination thereof; and

cause, at least in part, an inclusion of the at least one prompt in the at least one summary.

19. An apparatus of claim **11**, wherein the presentation of the transformation is via a voice-based user interface.

20. An apparatus of claim **11**, wherein the apparatus is further caused to:

determine context information associated with at least one recipient of the one or more telecommunications,

wherein an initiation of the processing of the one or more telecommunications is based, at least in part, on the context information.

21. A method of claim **1**, wherein the (1) data and/or (2) information and/or (3) at least one signal are further based, at least in part, on the following:

a determination of a set proportion of information that is contained in the one or more telecommunications that should be contained in the at least one summary,

wherein all of the original words in the one or more telecommunications are used in the determination of the set proportion.

* * * * *