US009476656B2

(12) **United States Patent**
Anwar

(10) **Patent No.: US 9,476,656 B2**
(45) **Date of Patent: Oct. 25, 2016**

(54) **HEAT EXCHANGER HAVING U-SHAPED TUBE ARRANGEMENT AND STAGGERED BENT ARRAY FOR ENHANCED AIRFLOW**

(71) Applicant: **TRANE INTERNATIONAL INC.**, Piscataway, NJ (US)

(72) Inventor: **Fahad Anwar**, Clarksville, TN (US)

(73) Assignee: **TRANE INTERNATIONAL INC.**, Piscataway, NJ (US)

(*) Notice: Subject to any disclaimer, the term of this patent is extended or adjusted under 35 U.S.C. 154(b) by 272 days.

(21) Appl. No.: **14/158,277**

(22) Filed: **Jan. 17, 2014**

(65) **Prior Publication Data**

US 2014/0196872 A1 Jul. 17, 2014

Related U.S. Application Data

(60) Provisional application No. 61/753,712, filed on Jan. 17, 2013.

(51) **Int. Cl.**

F28F 1/00	(2006.01)
F28F 13/12	(2006.01)
F28D 1/047	(2006.01)
F28F 1/06	(2006.01)

(52) **U.S. Cl.**

CPC ***F28F 13/12*** (2013.01); ***F28D 1/0475*** (2013.01); ***F28F 1/06*** (2013.01)

(58) **Field of Classification Search**

CPC F28D 1/0475; F28D 1/047; F28D 1/0476; F28D 1/0477; F28D 1/0478; F28F 1/06; F28F 13/12; F28F 1/424; F28F 1/426; F28F 2001/027

USPC ..... 165/177, 150, 176; 126/110 R, 116 R; 122/235.14, 235.23, 275–276

See application file for complete search history.

(56) **References Cited**

U.S. PATENT DOCUMENTS

514,338	A	2/1894	Row	
2,016,720	A	4/1933	Krause	
1,922,838	A	8/1933	Bossart	
4,014,962	A	3/1977	Del Notario	
4,332,236	A *	6/1982	Stora	F24C 15/003 126/152 B
4,332,294	A	6/1982	Drefahl et al.	
4,589,481	A	5/1986	Mansson	
4,830,600	A	5/1989	VerShaw et al.	
4,974,579	A *	12/1990	Shellenberger	F24H 3/087 126/110 R
5,271,376	A	12/1993	Lu et al.	
5,347,980	A *	9/1994	Shellenberger	F24H 3/087 126/110 R
5,393,224	A	2/1995	Allen et al.	
5,417,199	A *	5/1995	Jamieson	F24H 3/087 126/110 AA
5,540,276	A *	7/1996	Adams	F28F 1/32 165/150
5,573,062	A	11/1996	Ooba et al.	
5,839,505	A	11/1998	Ludwig et al.	
RE37,009	E	1/2001	Diesch	
6,364,008	B1	4/2002	Mannoni et al.	

(Continued)

Primary Examiner — Judy Swann
Assistant Examiner — Jose O Class-Quinones
(74) *Attorney, Agent, or Firm* — Hamre, Schumann, Mueller & Larson, P.C.

(57) **ABSTRACT**

Systems, apparatuses, and methods described herein are directed to a heat exchange tube structure and an arrangement of heat exchange tubes that enhance or help promote fluid flow through a heat exchanger. Bend portions of heat exchange tubes may be structured and configured to allow for gaps so that fluid may pass an assembly of the heat exchange tubes. The heat exchange tubes may be arranged to expose the air gaps at the bend portions of the heat exchange tubes to promote fluid flow.

8 Claims, 7 Drawing Sheets

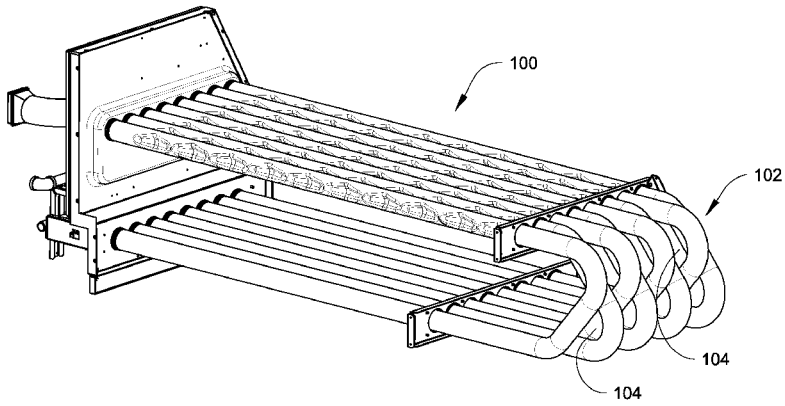

(56) **References Cited**

U.S. PATENT DOCUMENTS

6,422,306	B1	7/2002	Tomlinson et al.
6,688,378	B2	2/2004	O'Donnell et al.
6,945,320	B2	9/2005	Harvard, Jr. et al.
7,011,150	B2	3/2006	Komatsubara et al.
7,255,155	B2	8/2007	O'Donnell et al.
7,296,620	B2	11/2007	Bugler, III et al.
7,779,898	B2	8/2010	Morrison et al.
8,215,380	B2	7/2012	Li et al.
2002/0005275	A1*	1/2002	O'Donnell F24H 9/0026 165/109.1
2010/0258280	A1	10/2010	O'Donnell et al.

* cited by examiner

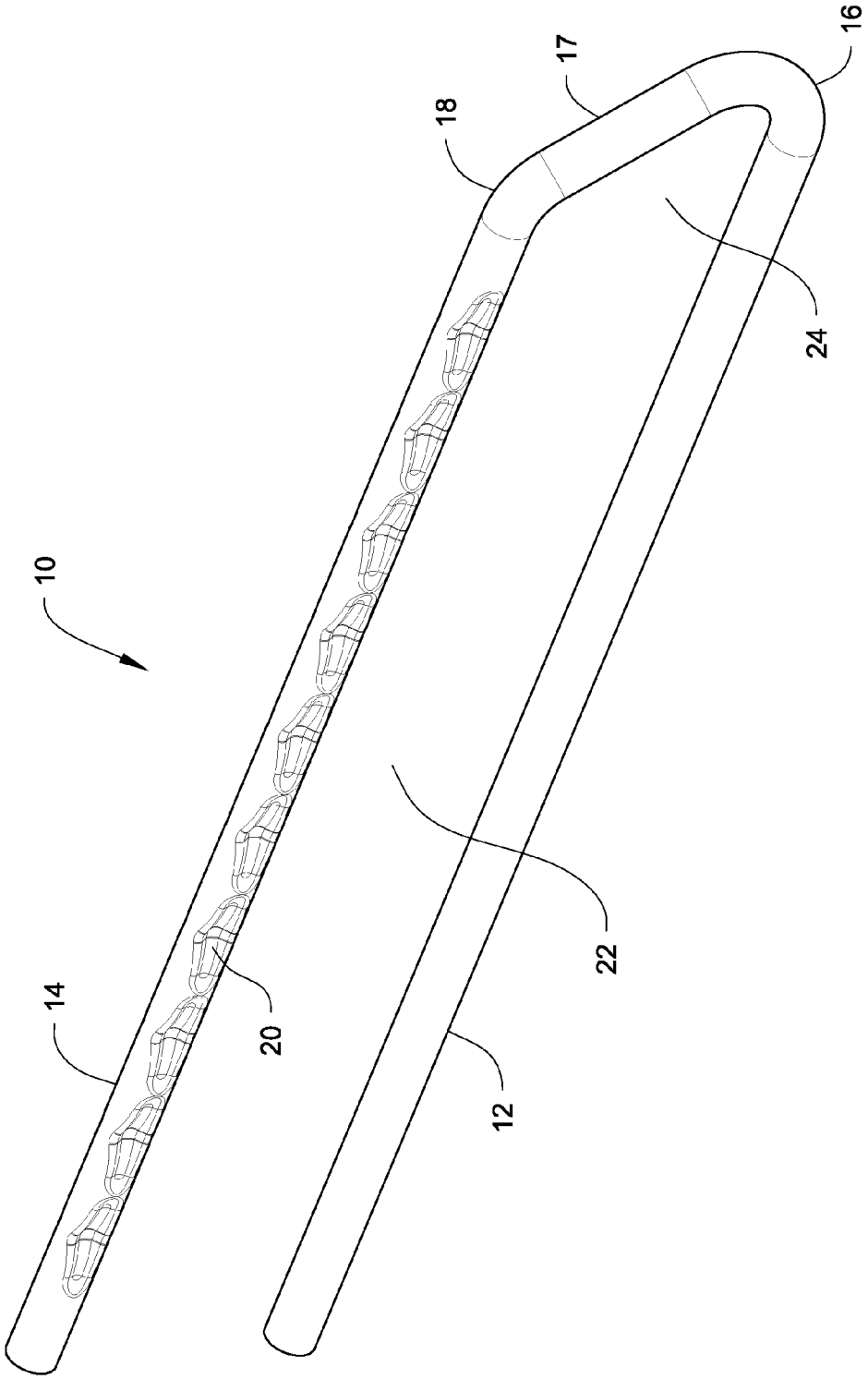

Fig. 1

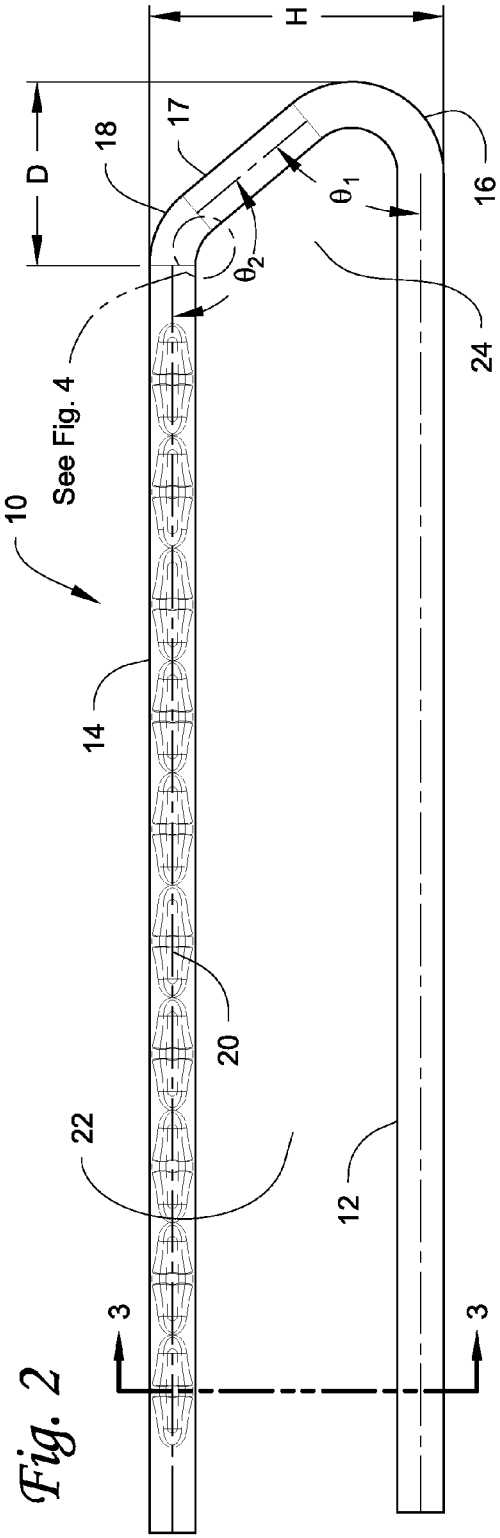

Fig. 2

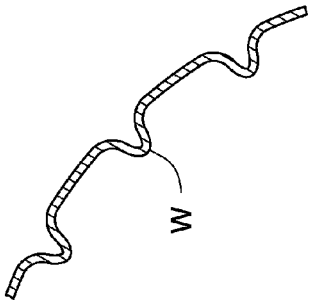

Fig. 4

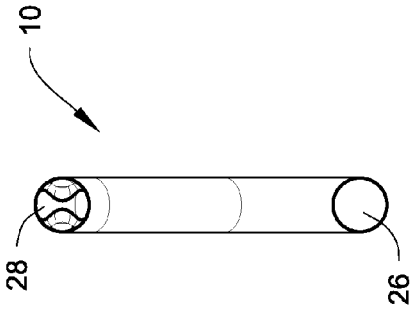

Fig. 3

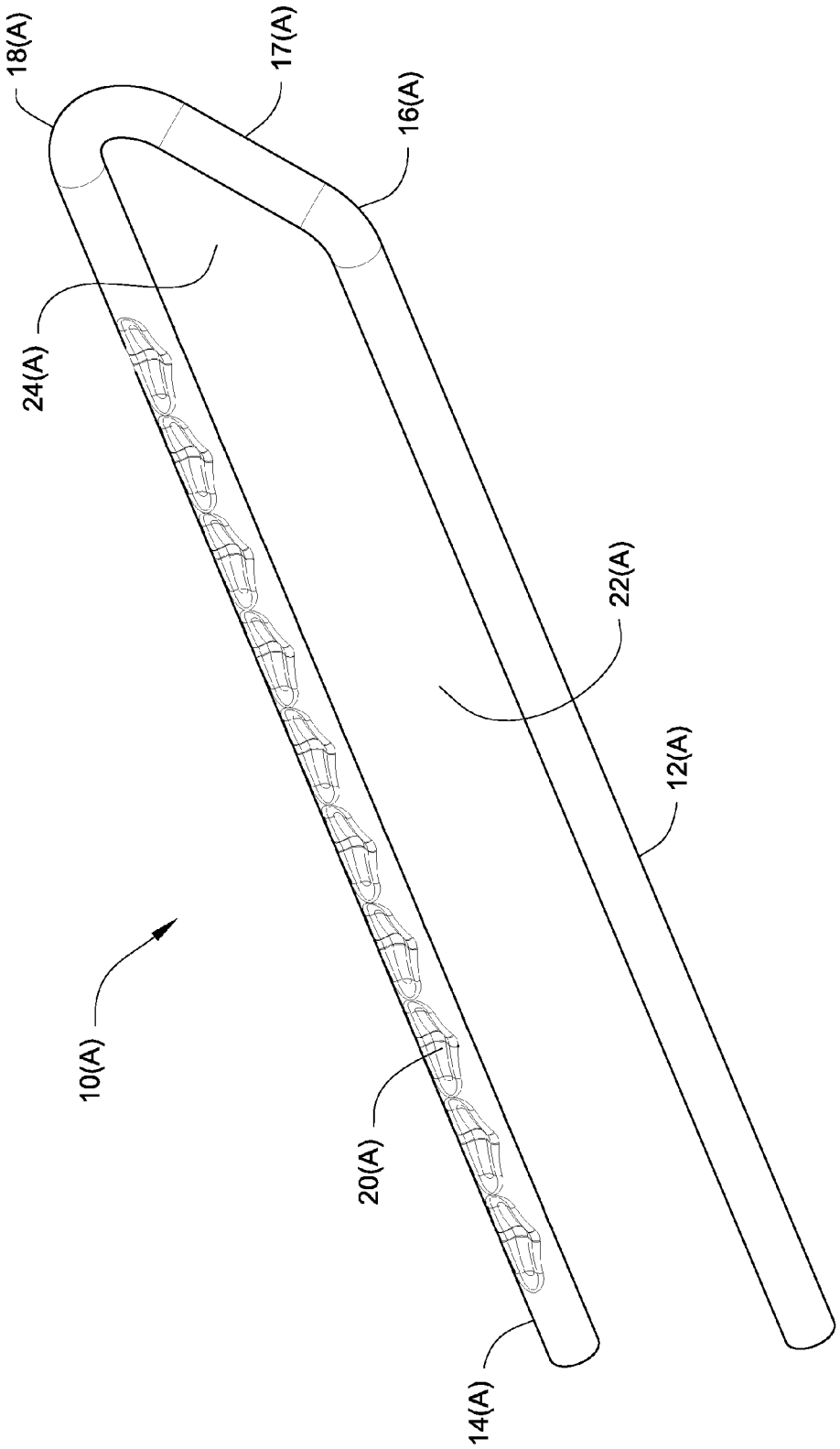

Fig. 5

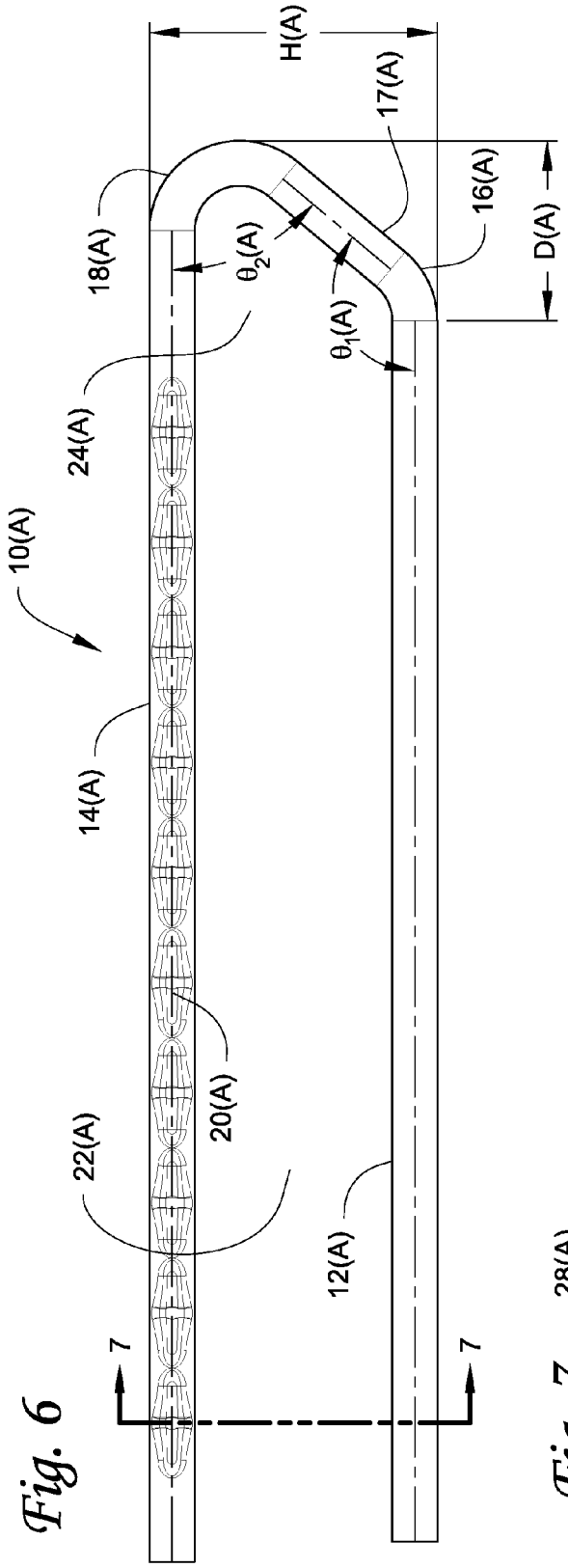
H(A)
17(A)
16(A)
D(A)
18(A)
θ_2(A)
θ_1(A)
24(A)
10(A)
14(A)
20(A)
22(A)
12(A)
7
7

Fig. 6

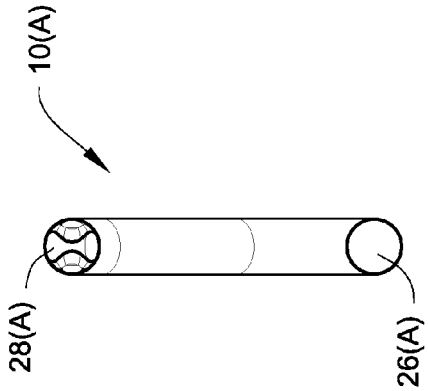
10(A)
28(A)
26(A)

Fig. 7

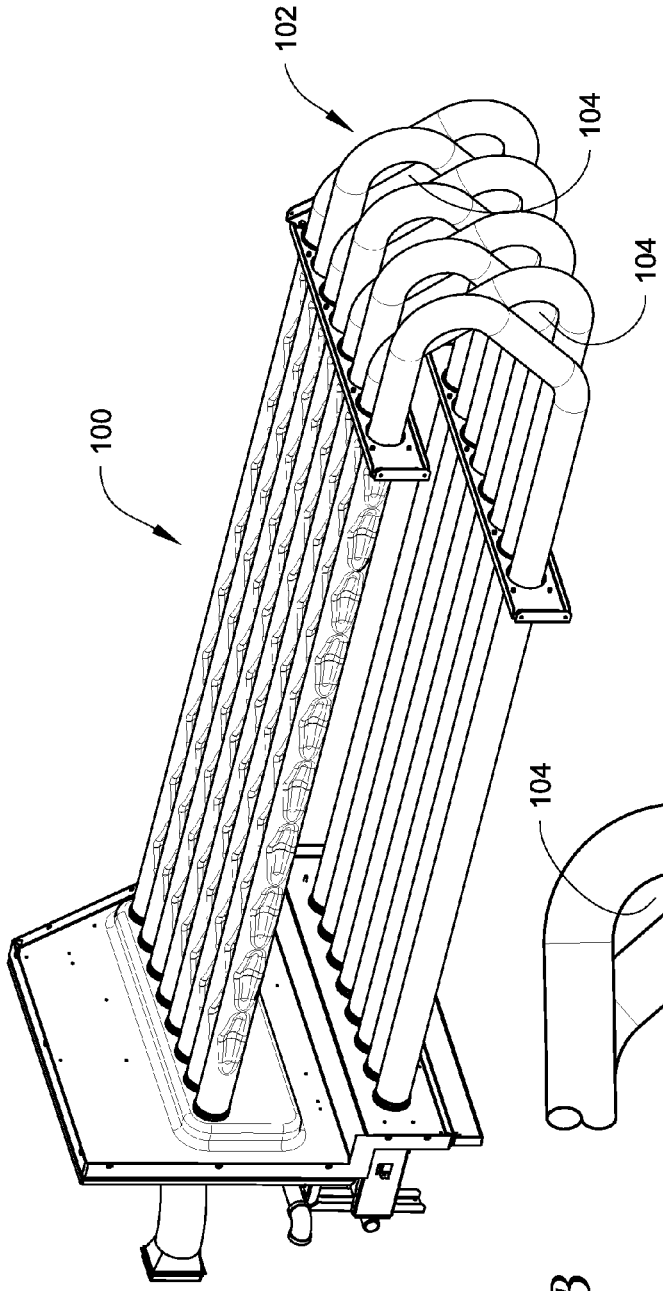

Fig. 8A

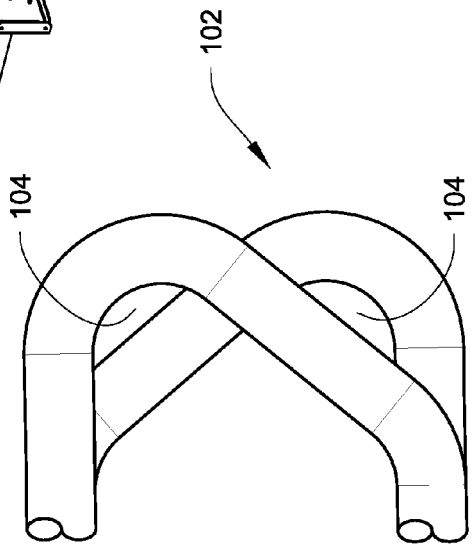

Fig. 8B

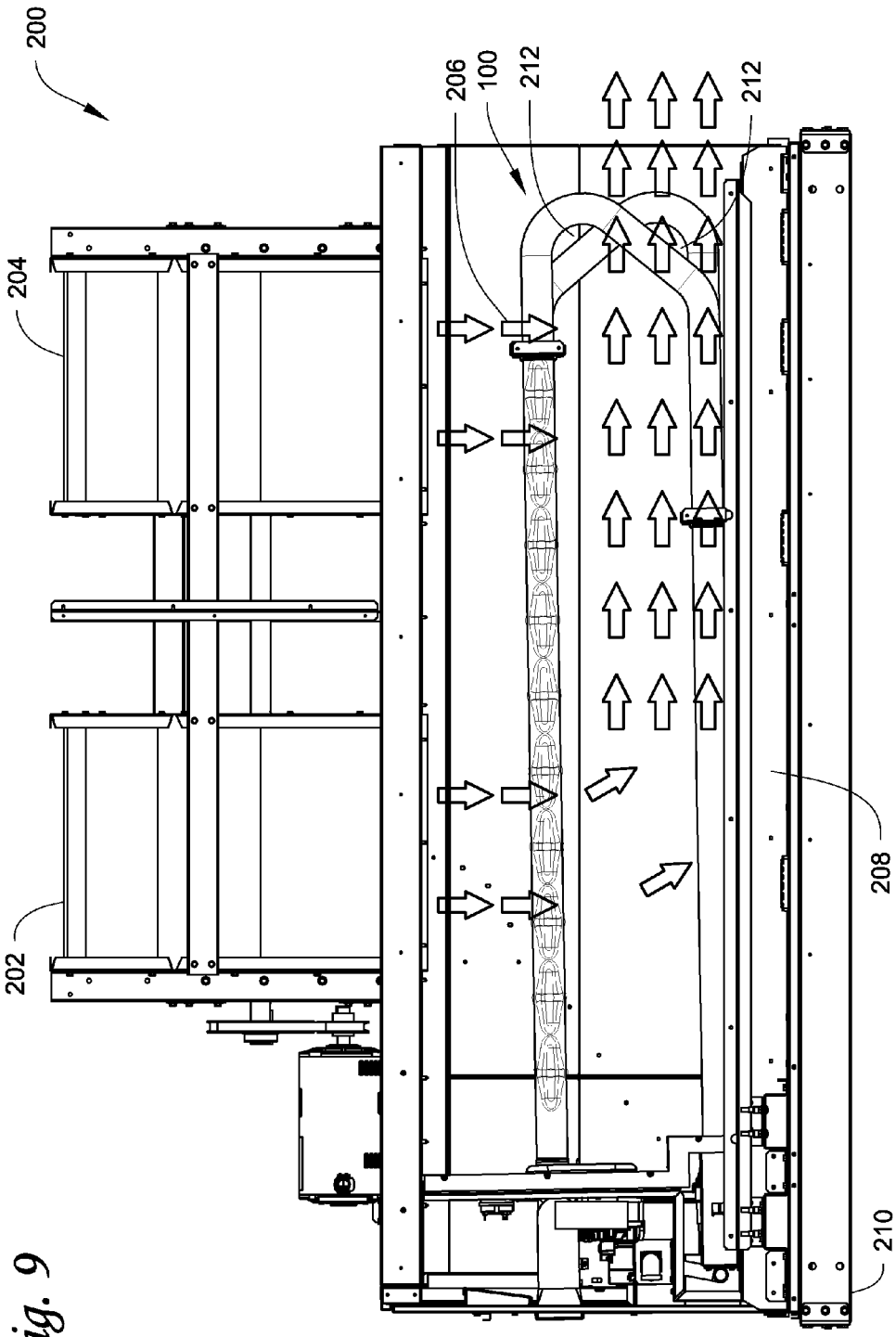

Fig. 9

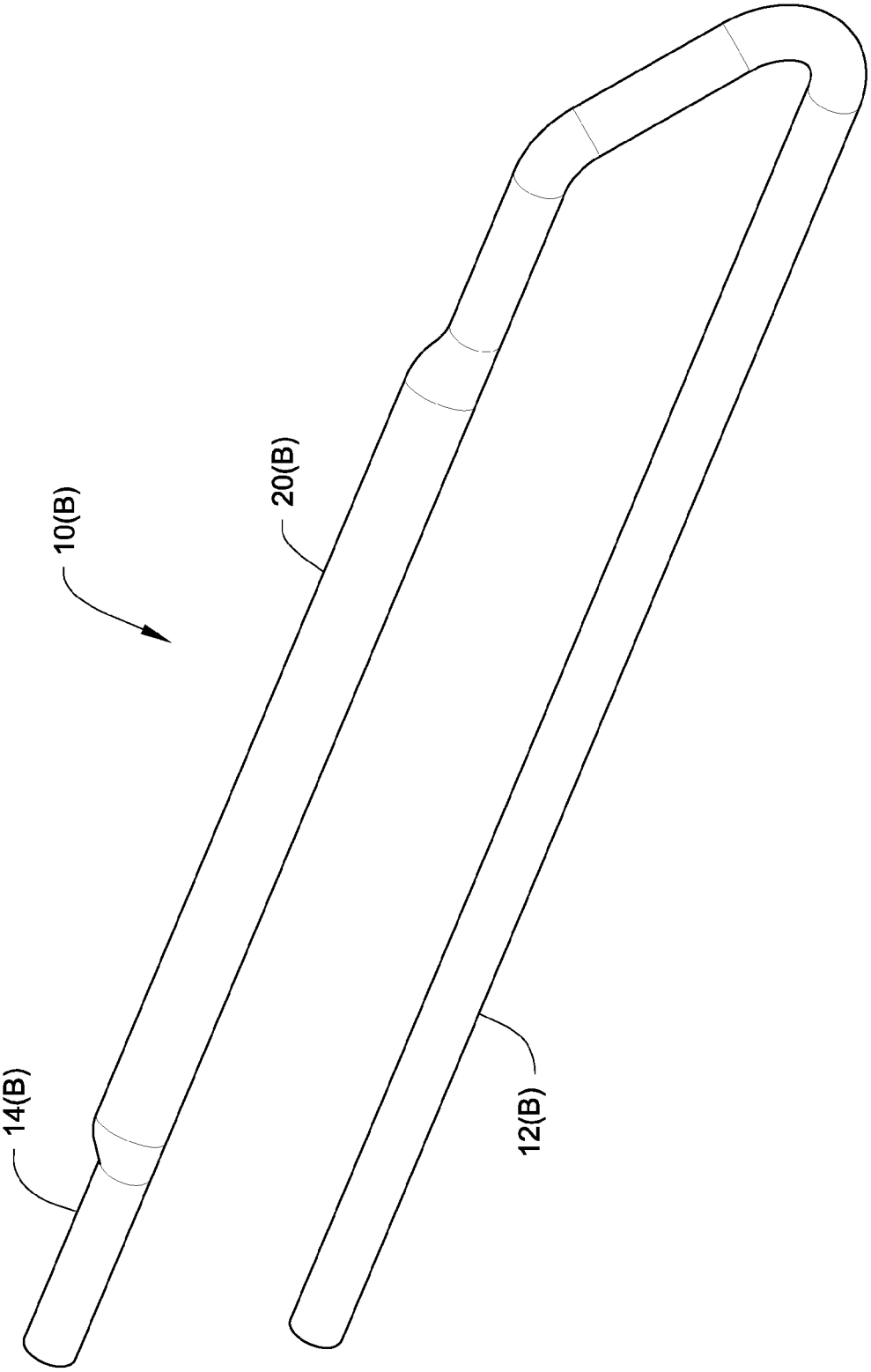

Fig. 10

HEAT EXCHANGER HAVING U-SHAPED TUBE ARRANGEMENT AND STAGGERED BENT ARRAY FOR ENHANCED AIRFLOW

FIELD OF TECHNOLOGY

Heat exchangers of heating, ventilation and air conditioning (HVAC) systems are described. Heat exchangers described herein are to embodiments and aspects of a heat exchange tube structure used in the heat exchanger and an arrangement of heat exchange tubes in the heat exchanger. The heat exchange tube structure and the tubes in their arrangement can enhance airflow through the heat exchanger, such as in an HVAC system.

BACKGROUND

A HVAC system can include a compressor or pump, one or more heat exchangers, and one or more fans to allow for return and supply air to appropriately move through the system. The heat exchanger(s) are configured to help establish a heat exchange relationship between a first fluid and a second fluid. For example, a heat exchanger designed as an arrangement of tubes can carry or otherwise circulate the first fluid, which can exchange heat with the second fluid that passes through the arrangement of tubes on the outside of the tubes. As one example, the first fluid can be a heated gas that is carried through the tubes and the second fluid can be air that flows or passes over the outside of the tubes, which is then heated through the heat exchange with the heated gas.

SUMMARY

Systems, apparatuses, and methods described herein are directed to a heat exchange tube structure and an arrangement of heat exchange tubes that enhance or help promote fluid flow through a heat exchanger. Generally, the heat exchange tubes and their arrangement are structured and configured to enhance fluid flow, which can include a reduction of pressure drop (or avoiding increase(s) in pressure drop), as a fluid passes through a heat exchanger, such as when fluid flows outside of the heat exchange tubes. Bend portions of heat exchange tubes may be structured and configured to allow for gaps so that fluid may pass through an assembly of the heat exchange tubes.

In one embodiment, a heat exchange tube can include a first leg connected to a bend portion, where the bend portion is connected to a second leg. The heat exchange tube can be formed or otherwise arranged to have the first and second legs generally parallel due to the connection with the bend portion. The heat exchange tube has a flow passage through the first leg, bend portion, and second leg, and the flow passage can carry or pass a fluid to establish a heat exchange relationship with a fluid passing over the outside of the heat exchange tube. The bend portion can have a first bend that connects the first leg to the bend portion and a second bend that connects the bend portion to the second leg. The first and second bends can create an opening proximate the bend portion with a certain geometry that can promote fluid flow passing over the heat exchange tube.

In some embodiments, the first bend has an inner angle that is relatively acute to the inner angle of the second bend, which would have an angle that is relatively obtuse to the inner angle of the first bend. In some embodiments the second bend has an inner angle that is relatively acute to the inner angle of the first bend, which would have an angle that is relatively obtuse to the inner angle of the second bend.

In some embodiments, an arrangement of heat exchange tubes can have one or more air gaps therebetween resulting from the geometry of the opening of each heat exchange tube. The air gap(s) can reduce pressure drop, which can also mean avoiding an increase(s) in pressure drop, where fluid may flow over the bend portions of the heat exchange tubes. In some embodiments, the heat exchange tubes can have a staggered or an offsetting arrangement, which in some embodiments may include an alternating array of the heat exchange tubes. The arrangement can expose the opening at the bend portions of some of the tubes, which can enhance or otherwise promote fluid flow.

Other features and aspects of the embodiments will become apparent by consideration of the following detailed description and accompanying drawings.

BRIEF DESCRIPTION OF THE DRAWINGS

FIG. **1** shows a perspective view of one embodiment of a heat exchange tube.

FIG. **2** shows a side view of the heat exchange tube of FIG. **1**.

FIG. **3** shows a sectional view of the heat exchange tube of FIG. **1** taken from line A-A of FIG. **2**.

FIG. **4** shows a wall section of the bend portions of the heat exchange tube of FIG. **1**.

FIG. **5** shows a perspective view of another embodiment of a heat exchange tube.

FIG. **6** shows a side view of the heat exchange tube of FIG. **5**.

FIG. **7** shows a sectional view of the heat exchange tube of FIG. **5** taken from line B-B of FIG. **6**.

FIG. **8**A shows one embodiment of an arrangement of heat exchange tubes, and shows the bend portions of the heat exchange tubes.

FIG. **8**B shows a side view of the arrangement of heat exchange tubes of FIG. **8**A at the bend portions of the heat exchange tubes.

FIG. **9** shows an inside plan view of one embodiment of a unit which may be used in a HVAC system that has the arrangement of heat exchange tubes of FIGS. **8**A and **8**B.

FIG. **10** shows perspective of another embodiment of a heat exchange tube with a flattened section.

Reference is now made to the drawings in which like reference numbers represent corresponding parts throughout.

DETAILED DESCRIPTION

Systems, apparatuses, and methods described herein are directed to a heat exchange tube structure and an arrangement of heat exchange tubes that enhance or help promote fluid flow through a heat exchanger. Generally, the heat exchange tubes and their arrangement are structured and configured to enhance fluid flow, which can include a reduction of pressure drop (or avoiding increase(s) in pressure drop), as a fluid passes through a heat exchanger, such as when fluid flows outside of the heat exchange tubes. Bend portions of the heat exchange tubes may be structured and configured to allow for gaps so that fluid may pass through an assembly of the heat exchange tubes.

In some embodiments, applications of the heat exchange tubes and their arrangement can be used for example in gas heat options. The heat exchange tubes can be made of a metal material, such as steel, however, it is to be appreciated

that the material of the heat exchange tubes are to be a material compatible with the fluid(s) used in the heat exchanger, which may depend upon the application. In many instances, such heat exchange tubes are bent back and forth to lengthen fluid paths, such as for example hot gas paths in a gas heat option. A fluid may be caused to flow over the outside of the heat exchange tubes to create a heat exchange relationship with the fluid passing inside the heat exchange tubes. For example, in a gas heat application, the fluid passing outside the heat exchange tubes can be a flow of air which is heated by heated gas passing through the heat exchange tubes, which the heated air flow can be used to heat an enclosed space such as in a building. It will be appreciated that the fluids for heat exchange are not limited to a gas heat option, and thus are not limited to heated gas and air as the fluids. Rather, the embodiments herein may be applicable for use with other fluids in heat exchange applications, such as but not limited to water, refrigerant, and other gas/air flows.

In some applications, such as in a unitary air conditioning/heating product with a gas heat option, a heat exchanger can be designed so that the heat exchange tubes allow reduced pressure drop of an air flow over the heat exchange tubes, which can enhance airflow performance by reducing the overall indoor fan power consumption. In some cases, this air flow can be in a certain direction, such as in a horizontal airflow application across the length of the heat exchange tubes. Such products may include applications in the light commercial and/or residential applications, which may include a gas heat option.

One function of the heat exchange tubes and their arrangement is to reduce the pressure drop through the heat exchanger by altering, such as by staggering, or such as by alternating every other heat exchange tube to expose openings of the heat exchange tubes that can reduce pressure drop and improve airflow performance. This can be useful, for example, in a horizontal airflow application through the heat exchanger. This can also be helpful in a down airflow application as well depending on the design and physical orientation of the heat exchanger and its application in the product. Generally, the arrangement of the heat exchange tubes allow for good airflow performance.

FIGS. **1** to **4** show one embodiment of a heat exchange tube **10**. In one embodiment, the heat exchange tube **10** can include a first leg **12** connected to a bend portion **17**, where the bend portion **17** is connected to a second leg **14**. As shown, the heat exchange tube **10** can be formed or otherwise arranged to have the first and second legs **12**, **14** generally parallel due to the connection with the bend portion **17**. A general opening **22** is defined between the first leg **12** and the second leg **14**. As shown in FIG. **3**, the heat exchange tube **10** has a flow passage **26**, **28** through the first leg **12**, bend portion **17**, and second leg **14**. The flow passage **26**, **28** can carry or pass a fluid to establish a heat exchange relationship with a fluid passing over the outside of the heat exchange tube **10**. The bend portion **17** can have a first bend **16** that connects the first leg **12** to the bend portion **17** and a second bend **18** that connects the bend portion **17** to the second leg **18**. The first and second bends **16**, **18** can create a fluid flow opening **24** proximate the bend portion **17** with a certain geometry that can promote fluid flow passing over the heat exchange tube **10**.

In some embodiments, the heat exchange tube **10** can have one or more external and/or internal surfaces **20** that can help promote turbulence in the flow internal and/or external to the tubes. Such surfaces can include but are not limited to dimples, recesses, contours, curvatures, and the like. As shown, the surfaces **20** are dimples **20** located along the second leg **14**, e.g. the top leg relative to the first or bottom leg **12**. In some embodiments, the dimples **20** can be a non-parabolic shape, where there is an internal gap of about 13% of the outer diameter of the overall tube **10**. In other embodiments, rather than dimples the surfaces **20**, may be flattened sections relative to the overall shape of the tube **10** and may extend on the along portions of the second leg **14**, e.g. the top leg relative to the first or bottom leg **12**. For example, the flattened section(s) may extend the same amount of the length of the second leg **14** as shown for the dimples. It will be appreciated that the surfaces are not limited to the dimples **20** and are not limited in their location on the second leg, but may be on other areas of the heat exchange tube **10** as may be desired, suitable and/or necessary. As shown in FIG. **3**, the dimples **20** can create inner channels in the flow passage **28** of the second leg **14**. For example, as shown in FIG. **3**, there is an internal gap, which may be about 0.3 inches between the internal surfaces of the tube **10**, and where the gap is at or about 13% of the outer diameter of the tube **10**, or in some cases about 13.3% or more. In some embodiments and applications, the outer diameter of the tube **10** may be at or about 2.25 inches. It will be appreciated that the gap relative to the outer diameter can be other percentages as desired, suitable, and/or necessary.

In some embodiments such as shown in FIG. **2**, the first bend **16** has an inner angle θ_1 that is relatively acute to the inner angle θ_2 of the second bend **18**, which would have an angle that is relatively obtuse to the inner angle θ_1 of the first bend. The configuration of the first and second bends **16**, **18** of the bend portion can create a certain geometry, such that when the heat exchange tube **10** is arranged with other heat exchange tubes, which may be similarly constructed, the fluid flow opening **24** can be exposed. FIG. **4** shows a wall section W of the bend portions of the heat exchange tube **10**, which can have wrinkles with sides that help maintain the structure.

As shown, the bend portion **17** and bends **16**, **18** can have a general height H and a length or distance D, where the first bend **16** is at one end of the length defined by D and the second bend **18** is at the other end of the length defined by D. As shown, the first bend is located farther from the first and second legs **12**, **14** relative to the second bend **18** in the longitudinal direction which is the lengths of the first and second legs **12**, **14**. As shown, the bend portion **17** and bends **16**, **18** generally form a triangle-like bend area of the heat exchange tube **10**, and where the opening **24** generally has a triangle-like shape defined by D and H of the bend portion **17**.

In some embodiments, the inner angles θ_1, θ_2 can generally have the sum of about 180° so that the bend portion **17** can accommodate the generally parallel relationship of the first and second legs **12**, **14**. In some embodiments, the inner angle θ_1 of the first bend can be about 30°, while the inner angle θ_2 of the second bend can be about 150°. It will be appreciated that these angles can vary and are not limited to these angles.

In some embodiments the second bend **18** has an inner angle θ_2 that is relatively acute to the inner angle θ_1 of the first bend **16**, which would have an angle that is relatively obtuse to the inner angle θ_2 of the second bend. FIGS. **5** to **7** show one embodiment of this.

FIGS. **5** to **7** show another embodiment of a heat exchange tube **10**(A). The heat exchange tube **10**(A) is substantially similar to the heat exchange tube **10**, except the heat exchange tube **10**(A) has been "flipped" compared to

heat exchange tube **10**. Generally, the first leg **12**(A) is shorter than the second leg **14**(A), so that the inner angles θ_1(A) and θ_2(A) have been switched when comparing to the heat exchange tube **10**. The heat exchange tube **10**(A) otherwise has a similar structure and includes the first leg **12**(A) connected to a bend portion **17**(A), where the bend portion **17**(A) is connected to the second leg **14**(A). The heat exchange tube **10**(A) also can be formed or otherwise arranged to have the first and second legs **12**(A), **14**(A) generally parallel due to the connection with the bend portion **17**(A). A general opening **22**(A) is defined between the first leg **12**(A) and the second leg **14**(A). As shown in FIG. **7**, the heat exchange tube **10**(A) has a flow passage **26**(A), **28**(A) through the first leg **12**(A), bend portion **17**(A), and second leg **14**(A). The flow passage **26**(A), **28**(A) can carry or pass a fluid to establish a heat exchange relationship with a fluid passing over the outside of the heat exchange tube **10**(A). The bend portion **17**(A) can have a first bend **16**(A) that connects the first leg **12**(A) to the bend portion **17**(A) and a second bend **18**(A) that connects the bend portion **17**(A) to the second leg **18**(A). The first and second bends **16**(A), **18**(A) can create a fluid flow opening **24**(A) proximate the bend portion **17**(A) with a certain geometry that can promote fluid flow passing over the heat exchange tube **10**(A).

In some embodiments, the heat exchange tube **10**(A) can have one or more external and/or internal surfaces **20**(A) that can help promote turbulence in the flow internal and/or external to the tubes. Such surfaces can include but are not limited to dimples, recesses, contours, curvatures, and the like. As shown, the surfaces **20**(A) are dimples **20**(A) located along the second leg **14**(A), e.g. the top leg relative to the first or bottom leg **12**(A). In some embodiments, the dimples **20**(A) can be a non-parabolic shape, where there is an internal gap of about 13% of the outer diameter of the overall tube **10**(A). In other embodiments, rather than dimples the surfaces **20**(A), may be flattened sections relative to the overall shape of the tube **10**(A) and may extend on the along portions of the second leg **14**(A), e.g. the top leg relative to the first or bottom leg **12**(A). For example, the flattened section(s) may extend the same amount of the length of the second leg **14**(A) as shown for the dimples. It will be appreciated that the surfaces are not limited to the dimples **20**(A) and are not limited in their location on the second leg, but may be on other areas of the heat exchange tube **10**(A) as may be desired, suitable and/or necessary. As shown in FIG. **7**, the dimples **20**(A) can create inner channels in the flow passage **28**(A) of the second leg **14**(A). For example, as shown in FIG. **7**, there is an internal gap, which may be about 0.3 inches between the internal surfaces of the tube **10**(A), and where the gap is at or about 13% of the outer diameter of the tube **10**(A), or in some cases about 13.3% or more. In some embodiments and applications, the outer diameter of the tube **10**(A) may be at or about 2.25 inches. It will be appreciated that the gap relative to the outer diameter can be other percentages as desired, suitable, and/or necessary.

In the example of a flattened section(s), FIG. **10** shows one embodiment of a tube **10**(B) with a flattened section **20**(B) that extends higher than the top of the tube **10**(B), but can be relatively level with the bottom of the tube **10**(B). As shown in FIG. **10**, the flattened section is **20**(B), the second or upper leg is **14**(B), and the first or lower leg is **12**(B). In some embodiments, the flattened section **20**(B) such as shown in FIG. **10** may be vertically oriented or upright relative to the axis of the tube **10**(B) perpendicular to the longitudinal axis of the tube **10**(B). It will be appreciated that the flattened section **20**(B) may also be angled relative to the axis of the tube **10**(B) perpendicular to the longitudinal axis of the tube **10**(B). It will be appreciated that the tube **10**(B) is similar to the tube **10** in FIG. **1**, and can include the same bend portion, bends, and relative bend angles. It will also be appreciated that the tube **10**(A) in FIG. **5** may also be constructed to have a flattened portion(s).

In some embodiments such as shown in FIG. **6**, the first bend **16**(A) has an inner angle θ_1(A) that is relatively obtuse to the inner angle θ_2(A) of the second bend **18**(A), which would have an angle that is relatively acute to the inner angle θ_1(A) of the first bend **16**(A). The configuration of the first and second bends **16**(A), **18**(A) of the bend portion can create a certain geometry, such that when the heat exchange tube **10**(A) is arranged with other heat exchange tubes, which may be similarly constructed, the fluid flow opening **24**(A) can be exposed.

As shown, the bend portion **17**(A) and bends **16**(A), **18**(A) can have a general height H(A) and a length or distance D(A), where the first bend **16**(A) is at one end of the length defined by D and the second bend **18**(A) is at the other end of the length defined by D. As shown, the second bend **18**(A) is located farther from the first and second legs **12**(A), **14**(A) relative to the first bend **16**(A) in the longitudinal direction which is the lengths of the first and second legs **12**(A), **14**(A). As shown, the bend portion **17**(A) and bends **16**(A), **18**(A) generally form a triangle-like bend area of the heat exchange tube **10**(A), and where the opening **24**(A) generally has a triangle-like shape defined by D(A), H(A) of the bend portion **17**(A).

In some embodiments, the inner angles θ_1(A), θ_2(A), can generally have the sum of about 180° so that the bend portion **17**(A) can accommodate the generally parallel relationship of the first and second legs **12**(A), **14**(A). In some embodiments, the inner angle θ_1(A) of the first bend can be about 30°, while the inner angle θ_2(A) of the second bend can be about 150°. It will be appreciated that these angles can vary and are not limited to these angles.

FIGS. **1** to **7** show individual tubes **10** and **10**(A) that generally have two bends (one obtuse and one acute), where the sum of the angles of two bends is about 180°.

FIGS. **8**A and **8**B show one embodiment of an arrangement **100** of heat exchange tubes. In some embodiments, an arrangement **100** of heat exchange tubes can have one or more air gaps **104** therebetween resulting from the geometry of the openings, e.g. **24**, **24**(A) of each heat exchange tube. FIGS. **8**A and **8**B show one embodiment of an arrangement of heat exchange tubes using the tubes **10** and **10**(A) from FIGS. **1** to **7** above. The air gap(s) **104** can reduce pressure drop, which can also mean avoiding an increase(s) in pressure drop, where fluid may flow over the bend portions of the heat exchange tubes. The air gaps can be located between the bend region **102** of the arrangement **100**.

In some embodiments, the heat exchange tubes can have a staggered or an offsetting arrangement, which in some embodiments may include an alternating array of the heat exchange tubes. In the embodiment shown in FIGS. **8**A and **8**B, the heat exchange tubes are arranged in an alternating configuration. However, it will be appreciated that the alternating configuration is not required, as other arrangements are possible to create one or more of the air gaps as desired, suitable, and/or necessary. Generally, the arrangement is to expose one or more of the openings (e.g. **24**, **24**(A)) located at bend portions (e.g. **17**, **17**(A)) of some of the heat exchange tubes (e.g. **10**, **10**(A)), which can enhance or otherwise promote fluid flow for example at this portion of the heat exchanger.

The arrangement as shown in FIGS. **8**A and **8**B can use two different tubes which are flipped in 180° in an alternating configuration, e.g. one tube with respect to the other tube, to achieve air gaps for the indoor air to pass without excessive pressure drop through the heat exchanger system in a cooling and a heat mode.

FIG. **9** shows one embodiment of a unit **200** which may be used in a HVAC system that has the arrangement **100** of heat exchange tubes of FIGS. **8**A to **8**C. The unit **200** can be a rooftop unit, for example, that may have air supply inlets **202**, **204** which direct air flow **206** into the unit **200** and over the heat exchanger **208** along the base **210**. In some embodiments, the application of the tube arrangement **100** can be for air flow that is directed downward into the unit **200** and horizontally out of the unit (see direction of arrows **206**) over the heat exchanger. It will be appreciated that this air flow configuration is merely exemplary and the arrangement **100** is not limited for use with horizontal air flow applications, e.g. and may also be useful in down flow applications. At **212**, the air gaps (e.g. **104**) are shown which can help promote fluid flow (e.g. air) through the heat exchanger, so as to reduce (or limit increase) in pressure drop.

It will be appreciated that the flipped angled tube arrangement as shown is just one orientation of the heat exchange tube with respect to another heat exchange tube, such as the adjacent tube in the arrangement. In some examples the arrangement can be alternating to every other tube as shown. It will be appreciated that the arrangement does not have to be alternating but can generally be staggered so that tubes with the same geometry at the bend portions can be arranged to create the air gaps. It will also be appreciated that the air gaps do not have to be present between each of the tubes in certain circumstances that may be desired and/or needed. Rather, the air gaps can be present with less frequency, where some tubes do not have the air gap therebetween.

It will also be appreciated that the geometry of the bend portions of the heat exchange tubes is not to be limiting, and is not limited to the triangle-like shape of FIGS. **1** to **7**. For example, in some cases, the angles may be roughly 90°, such as in cases where a triangle-like shape is not employed, but where an arrangement of heat exchange tubes have bend portions that do not extend in equal distances in the longitudinal direction, and can have an offsetting arrangement in the longitudinal direction of the tubes.

Generally, the inner angles (e.g. θ_1, θ_2, θ_1(A), θ_2(A)) of the first and second bends (e.g. **16**, **18**, **16**(A), **18**(A)) can vary to obtain the desired opening (e.g. **24**, **24**(A)) used in the heat exchanger design. Such different configurations can avoid too many of the tubes from having the same orientation, which can introduce pressure drop when the large amount of airflow passes through these tubes. Where enough tubes are arranged in the same orientation, such an arrangement can form a wall for flow external to the heat exchange tubes, e.g. air flow, which can cause pressure drop. The embodiments herein can avoid or at least reduce such an effect.

With regard to the foregoing description, it is to be understood that changes may be made in detail, especially in matters of the construction materials employed and the shape, size and arrangement of the parts without departing from the scope of the present invention. It is intended that the specification and depicted embodiment to be considered exemplary only, with a true scope and spirit of the invention being indicated by the broad meaning of the claims.

The invention claimed is:

1. A heat exchanger, comprising:

an arrangement of heat exchange tubes including

a first heat exchange tube;

a second heat exchange tube; and

a fluid flow gap configured from an arrangement of the first heat exchange tube and the second heat exchange tube,

the first heat exchange tube comprises: a first leg, a second leg, a bend portion connected to the first leg and the second leg, and a flow passage through the first leg, the bend portion, and the second leg,

the bend portion disposed between the first leg and the second leg,

the first and second legs are generally parallel to each other due to the connection with the bend portion, the bend portion is disposed at one end of the first heat exchange tube, and the first and second legs have free ends disposed at an end opposite the bend portion,

the flow passage suitable to pass a first portion of a first fluid inside the first heat exchange tube to establish a heat exchange relationship with a second fluid passing over and outside the first heat exchange tube,

the bend portion includes a first bend that connects the first leg to the bend portion and a second bend that connects the bend portion to the second leg, the first and second bends create a fluid flow opening proximate the bend portion suitable to promote fluid flow through the fluid flow opening of the first heat exchange tube and to pass outside the first heat exchange tube,

the second heat exchange tube respectively comprises: a first leg, a second leg, a bend portion connected to the first leg and the second leg, and a flow passage through the first leg, the bend portion, and the second leg,

the bend portion disposed between the first leg and the second leg,

the first and second legs are generally parallel to each other due to the connection with the bend portion, the bend portion is disposed at one end of the second heat exchange tube, and the first and second legs have free ends disposed at an end opposite the bend portion,

the flow passage suitable to pass a second portion of the first fluid inside the second heat exchange tube to establish a heat exchange relationship with the second fluid passing over and outside the second heat exchange tube,

the bend portion includes a first bend that connects the first leg to the bend portion and a second bend that connects the bend portion to the second leg, the first and second bends create a fluid flow opening proximate the bend portion suitable to promote fluid flow through the fluid flow opening of the second heat exchange tube and to pass outside the second heat exchange tube,

the fluid flow gap formed by a portion of the bend portion of the first heat exchange tube extending beyond a portion of the bend portion of the second heat exchange tube,

wherein the fluid flow gap is defined by the fluid flow openings of the first heat exchange tube and the second heat exchange tube being at least partially exposed, and

wherein in one of the first heat exchange tube or the second heat exchange tube, the first bend includes an inner angle that is acute relative to an inner angle of the second bend, and the second bend includes an inner angle that is obtuse relative to the inner angle of the first bend, and wherein in the other of the first heat exchange

tube or the second heat exchange tube, the first bend includes an inner angle that is obtuse relative to an inner angle of the second bend, and the second bend includes an inner angle that is acute relative to the inner angle of the first bend,

wherein one of the first leg and the second leg of each of the first heat exchange tube and of the second heat exchange tube is oriented relatively above the other of the first leg and the second leg of each of the first heat exchange tube and the second heat exchange tube, and has at least one of an internal surface and an external surface that are suitable to promote turbulence of fluid flowing through the flow passage.

2. The heat exchanger of claim **1**, wherein the first and second bends of the first and second heat exchange tubes respectively form the fluid flow openings to resemble a triangle-like bend area.

3. The heat exchanger of claim **1**, wherein the surface is one or more dimples.

4. The heat exchanger of claim **1**, wherein the arrangement of heat exchange tubes includes heat exchange tubes that are alternated to form a staggered configuration at ends of the heat exchange tubes so as to form multiple fluid flow gaps.

5. The heat exchanger of claim **1**, wherein the arrangement of heat exchange tubes is a component of one of a unitary air conditioning product and a unitary air heating product.

6. A method of fluid heat exchange, comprising:

directing a first fluid through an arrangement of heat exchange tubes;

directing a second fluid over and outside of the arrangement of heat exchange tubes, the arrangement of heat exchange tubes including a first heat exchange tube, a second heat exchange tube, and a fluid flow gap,

a) the first heat exchange tube comprises: a first leg, a second leg, a bend portion connected to the first leg and the second leg, and a flow passage through the first leg, the bend portion, and the second leg, the bend portion disposed between the first leg and the second leg, the first and second legs are generally parallel to each other due to the connection with the bend portion, the bend portion is disposed at one end of the first heat exchange tube, and the first and second legs have free ends disposed at an end opposite the bend portion, the flow passage suitable to pass a first portion of the first fluid inside the first heat exchange tube to establish a heat exchange relationship with the second fluid passing over outside the first heat exchange tube, the bend portion includes a first bend that connects the first leg to the bend portion and a second bend that connects the bend portion to the second leg, the first and second bends create a fluid flow opening proximate the bend portion suitable to promote fluid flow through the fluid flow opening of the first heat exchange tube and to pass outside the first heat exchange tube,

b) the second heat exchange tube respectively comprises: a first leg, a second leg, a bend portion connected to the first leg and the second leg, and a flow passage through the first leg, the bend portion, and the second leg, the bend portion disposed between the first leg and the second leg, the first and second legs are generally parallel to each other due to the connection with the bend portion, the bend portion is disposed at one of the second heat exchange tube, and the first and second legs have free ends disposed at an end opposite the bend portion, the flow passage suitable to pass a second portion of the first fluid inside the second heat exchange tube to establish a heat exchange relationship with the second fluid passing over outside the second heat exchange tube, the bend portion includes a first bend that connects the first leg to the bend portion and a second bend that connects the bend portion to the second leg, the first and second bends create a fluid flow opening proximate the bend portion suitable to promote fluid flow through the fluid flow opening of the second heat exchange tube and to pass outside the second heat exchange tube,

c) the fluid flow gap formed by a portion of the bend portion of the first heat exchange tube extending beyond a portion of the bend portion of the second heat exchange tube, wherein the fluid flow gap is defined by the fluid flow openings of the first heat exchange tube and the second heat exchange tube being at least partially exposed, wherein in one of the first heat exchange tube or the second heat exchange tube, the first bend includes an inner angle that is acute relative to an inner angle of the second bend, and the second bend includes an inner angle that is obtuse relative to the inner angle of the first bend, and wherein in the other of the first heat exchange tube or the second heat exchange tube, the first bend includes an inner angle that is obtuse relative to an inner angle of the second bend, and the second bend includes an inner angle that is acute relative to the inner angle of the first bend, and wherein one of the first leg and the second leg of each of the first heat exchange tube and of the second heat exchange tube is oriented relatively above the other of the first leg and the second leg of each of the first heat exchange tube and the second heat exchange tube, and has at least one of an internal surface and an external surface that are suitable to promote turbulence of fluid flowing through the flow passage;

directing the second fluid through the fluid flow gap at the ends of the heat exchange tubes where the bend portions are disposed; and

limiting increase in pressure drop when the second fluid passes through the fluid flow gap.

7. The method of claim **6**, wherein the directing the second fluid flow over and outside of the arrangement of heat exchange tubes includes directing the second fluid to flow horizontally.

8. The method of claim **6**, wherein the directing the second fluid through the fluid flow gap includes directing the second fluid to flow horizontally.

* * * * *