US009202355B2

(12) **United States Patent**
Hill

(10) **Patent No.: US 9,202,355 B2**
(45) **Date of Patent: Dec. 1, 2015**

(54) **SELF ADAPTING HAPTIC DEVICE**

(71) Applicant: **Apple Inc.**, Cupertino, CA (US)

(72) Inventor: **Matthew Hill**, Cupertino, CA (US)

(73) Assignee: **Apple Inc.**, Cupertino, CA (US)

(*) Notice: Subject to any disclaimer, the term of this patent is extended or adjusted under 35 U.S.C. 154(b) by 0 days.

(21) Appl. No.: **14/512,927**

(22) Filed: **Oct. 13, 2014**

(65) **Prior Publication Data**

US 2015/0061848 A1 Mar. 5, 2015

Related U.S. Application Data

(60) Division of application No. 13/943,639, filed on Jul. 16, 2013, now Pat. No. 8,860,562, which is a continuation of application No. 12/750,054, filed on Mar. 30, 2010, now Pat. No. 8,487,759, which is a continuation-in-part of application No. 12/571,326, filed on Sep. 30, 2009, now Pat. No. 8,552,859.

(51) **Int. Cl.**

H04B 3/36	(2006.01)
G08B 6/00	(2006.01)
H04M 1/725	(2006.01)
H04M 19/04	(2006.01)

(52) **U.S. Cl.**

CPC ***G08B 6/00*** (2013.01); ***H04M 1/72563*** (2013.01); ***H04M 19/04*** (2013.01); *H04M 19/047* (2013.01)

(58) **Field of Classification Search**

CPC H04M 19/047; G08B 6/00

USPC 340/407.1, 407.2, 514, 540, 541, 665, 340/635, 638, 10.2; 455/550.1, 567, 574, 455/575.3, 566

See application file for complete search history.

(56) **References Cited**

U.S. PATENT DOCUMENTS

4,412,148	A	10/1983	Klicker et al.
4,414,984	A	11/1983	Zarudiansky
5,245,734	A	9/1993	Issartel
5,283,408	A	2/1994	Chen
5,293,161	A	3/1994	MacDonald et al.
5,434,549	A	7/1995	Hirabayashi et al.

(Continued)

FOREIGN PATENT DOCUMENTS

CN	101409164	4/2009
EP	0483955	5/1992

(Continued)

OTHER PUBLICATIONS

Hasser et al., "Preliminary Evaluation of a Shape-Memory Alloy Tactile Feedback Display," Advances in Robotics, Mechatronics, and Haptic Interfaces, ASME, DSC—vol. 49, pp. 73-80, 1993.

(Continued)

Primary Examiner — Tai T Nguyen

(74) *Attorney, Agent, or Firm* — Brownstein Hyatt Farber Schreck, LLP

(57) **ABSTRACT**

Methods and apparatuses are disclosed that allow an electronic device to autonomously adapt one or more user alerts of the electronic device. For example, some embodiments may include a method for operating a haptic device including driving a haptic device using a control signal, measuring a frequency related to the operation of the haptic device and comparing the measured frequency with a target frequency. A control signal is adjusted based on the comparison to drive the haptic device to the target frequency.

20 Claims, 11 Drawing Sheets

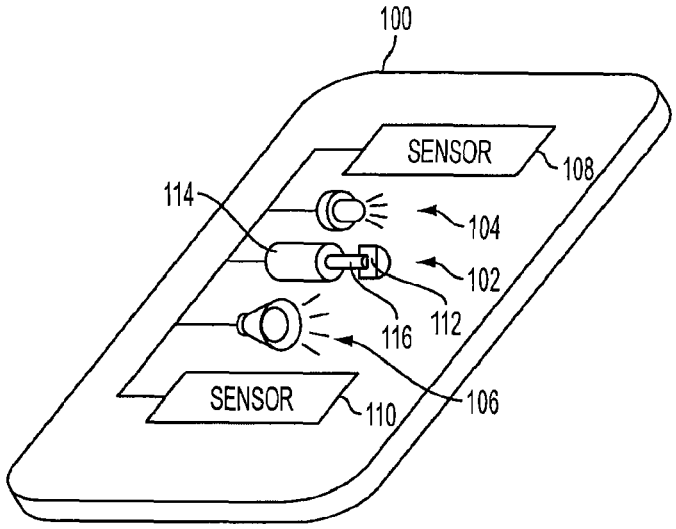

(56) **References Cited**

U.S. PATENT DOCUMENTS

5,436,622 A 7/1995 Gutman et al.
5,510,584 A 4/1996 Norris
5,510,783 A 4/1996 Findlater et al.
5,587,875 A 12/1996 Sellers
5,590,020 A 12/1996 Sellers
5,602,715 A 2/1997 Lempicki et al.
5,619,005 A 4/1997 Shibukawa et al.
5,621,610 A 4/1997 Moore et al.
5,625,532 A 4/1997 Sellers
5,635,928 A 6/1997 Takagi et al.
5,739,759 A 4/1998 Nakazawa et al.
5,742,242 A 4/1998 Sellers
5,783,765 A 7/1998 Muramatsu
5,793,605 A 8/1998 Sellers
5,812,116 A 9/1998 Malhi
5,818,149 A 10/1998 Safari et al.
5,951,908 A 9/1999 Cui et al.
5,982,304 A 11/1999 Selker et al.
5,982,612 A 11/1999 Roylance
5,995,026 A 11/1999 Sellers
5,999,084 A 12/1999 Armstrong
6,135,886 A 10/2000 Armstrong
6,222,525 B1 4/2001 Armstrong
6,342,880 B2 1/2002 Rosenberg et al.
6,351,205 B1 2/2002 Armstrong
6,373,465 B2 4/2002 Jolly et al.
6,408,187 B1 6/2002 Merriam
6,411,276 B1 6/2002 Braun et al.
6,438,393 B1 8/2002 Surronen
6,444,928 B2 9/2002 Okamoto et al.
6,693,626 B1 2/2004 Rosenberg
6,717,573 B1 4/2004 Shahoian et al.
6,809,462 B2 10/2004 Pelrine et al.
6,864,877 B2 3/2005 Braun et al.
6,906,697 B2 6/2005 Rosenberg
6,906,700 B1 6/2005 Armstrong
6,906,703 B2 6/2005 Vablais et al.
6,952,203 B2 10/2005 Banerjee et al.
6,954,657 B2 10/2005 Bork et al.
6,995,752 B2 2/2006 Lu
7,022,927 B2 4/2006 Hsu
7,121,147 B2 10/2006 Okada
7,123,948 B2 10/2006 Nielsen
7,130,664 B1 10/2006 Williams
7,136,045 B2 11/2006 Rosenberg et al.
7,161,580 B2 1/2007 Bailey et al.
7,170,498 B2 1/2007 Huang
7,176,906 B2 2/2007 Williams et al.
7,182,691 B1 2/2007 Schena
7,219,561 B2 5/2007 Okada
7,253,350 B2 8/2007 Noro et al.
7,333,604 B2 2/2008 Zernovizky et al.
7,348,968 B2 3/2008 Dawson
7,392,066 B2 6/2008 Hapamas
7,423,631 B2 9/2008 Shahoian et al.
7,446,752 B2 11/2008 Goldenberg et al.
7,508,382 B2 3/2009 Denoue et al.
7,561,142 B2 7/2009 Shahoian et al.
7,569,086 B2 8/2009 Chandran
7,675,414 B2 3/2010 Ray
7,679,611 B2 3/2010 Schena
7,710,399 B2 5/2010 Bruneau et al.
7,798,982 B2 9/2010 Zets et al.
7,946,483 B2 5/2011 Miller et al.
7,952,261 B2 5/2011 Lipton et al.
7,952,566 B2 5/2011 Poupyrev et al.
7,956,770 B2 6/2011 Klinghult et al.
7,961,909 B2 6/2011 Mandella et al.
8,044,940 B2 10/2011 Narusawa
8,077,145 B2 12/2011 Rosenberg et al.
8,081,156 B2 12/2011 Ruettiger
8,082,640 B2 12/2011 Takeda
8,125,453 B2 2/2012 Shahoian et al.
8,174,372 B2 5/2012 da Costa
8,179,202 B2 5/2012 Cruz-Hernandez et al.
8,232,494 B2 7/2012 Purcocks
8,253,686 B2 8/2012 Kyung et al.
8,344,834 B2 1/2013 Niiyama
8,378,797 B2 2/2013 Pance et al.
8,378,965 B2 2/2013 Gregorio et al.
8,487,759 B2 7/2013 Hill
8,547,341 B2 10/2013 Takashima et al.
8,552,859 B2 10/2013 Pakula et al.
8,570,291 B2 10/2013 Motomura
8,587,955 B2 11/2013 DiFonzo et al.
8,599,152 B1 12/2013 Wurtenberger et al.
8,614,431 B2 12/2013 Huppi et al.
8,633,916 B2 1/2014 Bernstein et al.
8,710,966 B2 4/2014 Hill
8,836,502 B2 9/2014 Culbert et al.
8,860,562 B2 10/2014 Hill
8,866,600 B2 10/2014 Yang et al.
8,928,621 B2 1/2015 Ciesla et al.
2003/0210259 A1 11/2003 Liu
2004/0021663 A1 2/2004 Suzuki et al.
2004/0127198 A1 7/2004 Roskind et al.
2005/0057528 A1 3/2005 Kleen
2005/0107129 A1 5/2005 Kaewell et al.
2005/0110778 A1 5/2005 Ben Ayed
2005/0118922 A1 6/2005 Endo
2005/0248549 A1 11/2005 Dietz et al.
2006/0154674 A1 7/2006 Landschaft et al.
2006/0209037 A1 9/2006 Wang et al.
2006/0239746 A1 10/2006 Grant
2006/0252463 A1 11/2006 Liao
2007/0099574 A1 5/2007 Wang
2007/0152974 A1 7/2007 Kim et al.
2007/0188450 A1 8/2007 Hernandez et al.
2008/0084384 A1 4/2008 Gregorio et al.
2008/0158149 A1 7/2008 Levin
2008/0165148 A1 7/2008 Williamson
2008/0181706 A1 7/2008 Jackson
2008/0192014 A1 8/2008 Kent et al.
2008/0255794 A1 10/2008 Levine
2009/0115734 A1 5/2009 Fredriksson et al.
2009/0128503 A1 5/2009 Grant et al.
2009/0135142 A1 5/2009 Fu et al.
2009/0167702 A1 7/2009 Nurmi
2009/0167704 A1 7/2009 Terlizzi et al.
2009/0200880 A1* 8/2009 Mortimer et al. 310/81
2009/0218148 A1 9/2009 Hugeback et al.
2009/0225046 A1 9/2009 Kim et al.
2009/0267892 A1 10/2009 Faubert
2009/0267920 A1 10/2009 Faubert et al.
2009/0313542 A1 12/2009 Cruz-Hernandez et al.
2010/0053087 A1 3/2010 Dai et al.
2010/0141606 A1 6/2010 Bae et al.
2010/0194547 A1 8/2010 Terrell et al.
2010/0231508 A1 9/2010 Cruz-Hernandez et al.
2010/0231550 A1 9/2010 Cruz-Hernandez et al.
2010/0265197 A1 10/2010 Purdy
2010/0328229 A1 12/2010 Weber et al.
2011/0107958 A1 5/2011 Pance et al.
2011/0121765 A1 5/2011 Anderson et al.
2011/0128239 A1 6/2011 Polyakov et al.
2011/0203912 A1 8/2011 Niu
2011/0291950 A1 12/2011 Tong
2012/0068957 A1 3/2012 Puskarich et al.
2012/0075198 A1 3/2012 Sulem et al.
2012/0127088 A1 5/2012 Pance et al.
2012/0268412 A1 10/2012 Cruz-Hernandez et al.
2012/0327006 A1 12/2012 Israr et al.
2013/0120290 A1 5/2013 Yumiki et al.
2013/0181913 A1 7/2013 Cole et al.
2014/0091857 A1 4/2014 Bernstein
2014/0267952 A1 9/2014 Sirois
2015/0109215 A1 4/2015 Puskarich

FOREIGN PATENT DOCUMENTS

EP 1047258 10/2000
EP 1686776 8/2006
EP 2073099 6/2009
EP 2194444 6/2010

(56) **References Cited**

FOREIGN PATENT DOCUMENTS

EP	2395414	12/2011
EP	2631746	8/2013
JP	2004236202	8/2004
KR	20050033909	4/2005
TW	200518000	11/2007
WO	WO 97/16932	5/1997
WO	WO 02/073587	9/2002
WO	WO 03/038800	5/2003
WO	WO 2006/057770	6/2006
WO	WO 2007/114631	10/2007
WO	WO 2008/075082	6/2008
WO	WO 2009/038862	3/2009
WO	WO 2009/068986	6/2009
WO	WO 2009/097866	8/2009
WO	WO 2009/122331	10/2009
WO	WO 2009/150287	12/2009
WO	WO 2010/087925	8/2010

OTHER PUBLICATIONS

Hill et al., "Real-time Estimation of Human Impedance for Haptic Interfaces," Stanford Telerobotics Laboratory, Department of Mechanical Engineering, Standford University, 6 pages, at least as early as Sep. 30, 2009.

Lee et al, "Haptic Pen: Tactile Feedback Stylus for Touch Screens," Mitsubishi Electric Research Laboratories, http://wwwlmerl.com, 6 pages, Oct. 2004.

* cited by examiner

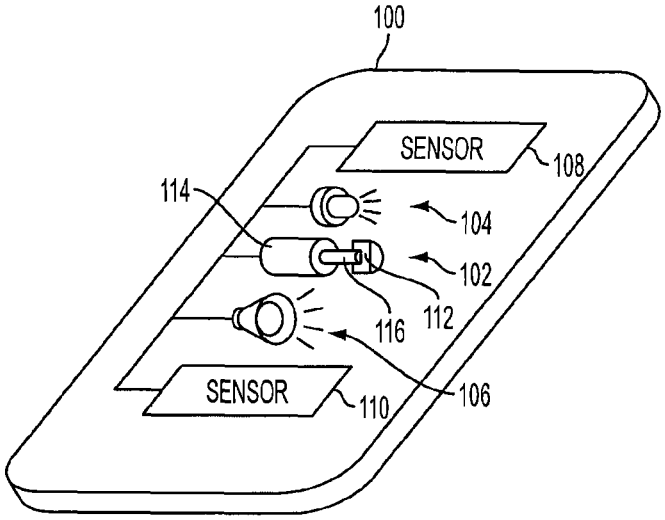

FIG. 1

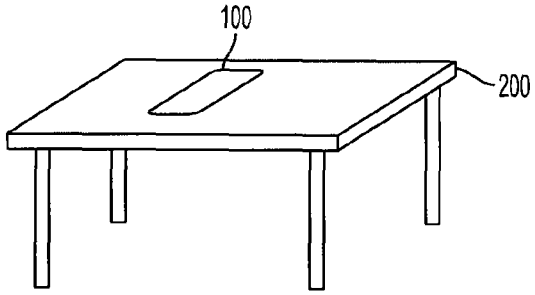

FIG. 2

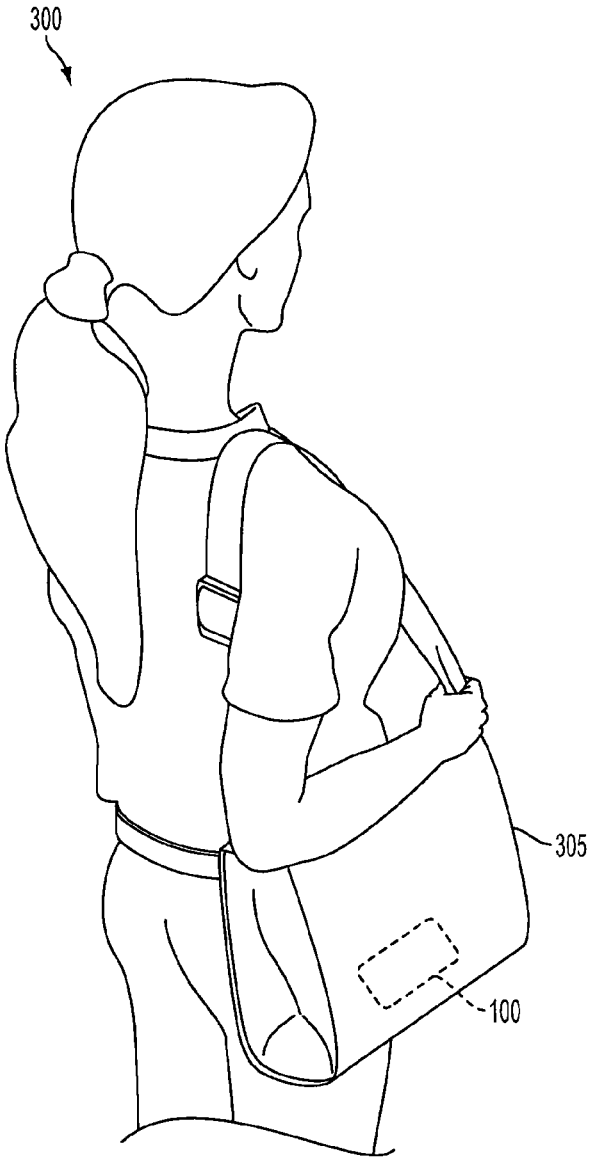

FIG. 3

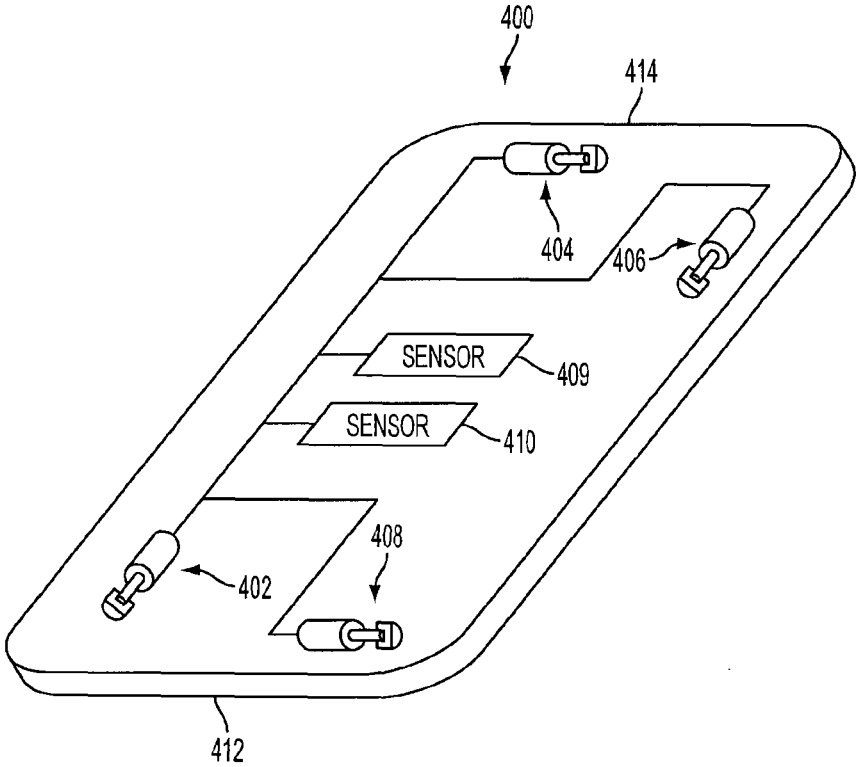

FIG. 4

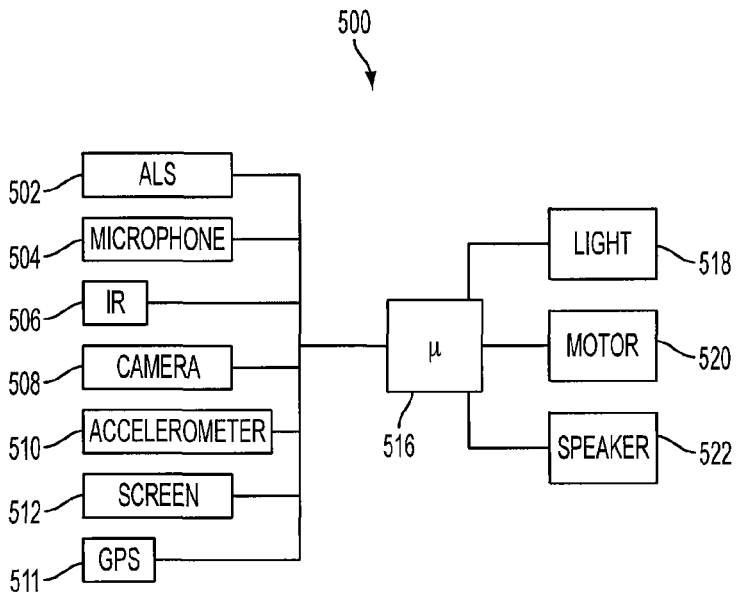
500
502
ALS
504
MICROPHONE
506
IR
508
CAMERA
510
ACCELEROMETER
512
SCREEN
511
GPS
μ
516
LIGHT
518
MOTOR
520
SPEAKER
522

FIG. 5

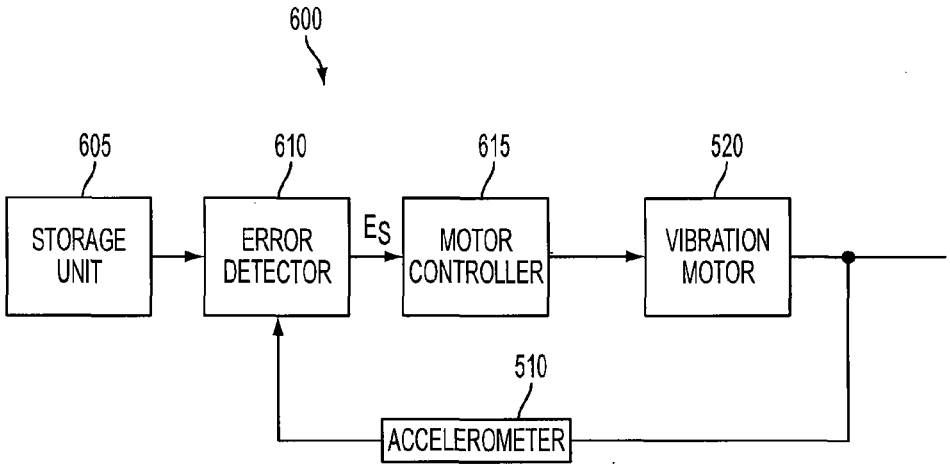
600
605
STORAGE UNIT
610
ERROR DETECTOR
Es
615
MOTOR CONTROLLER
520
VIBRATION MOTOR
510
ACCELEROMETER

FIG. 6

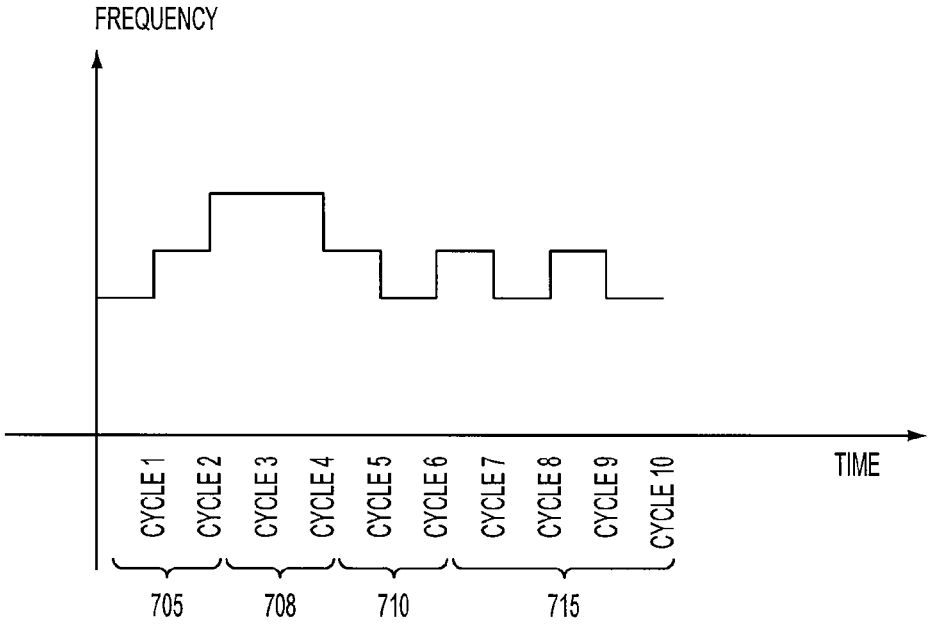
FREQUENCY
TIME
CYCLE 1
CYCLE 2
CYCLE 3
CYCLE 4
CYCLE 5
CYCLE 6
CYCLE 7
CYCLE 8
CYCLE 9
CYCLE 10
705
708
710
715

FIG. 7

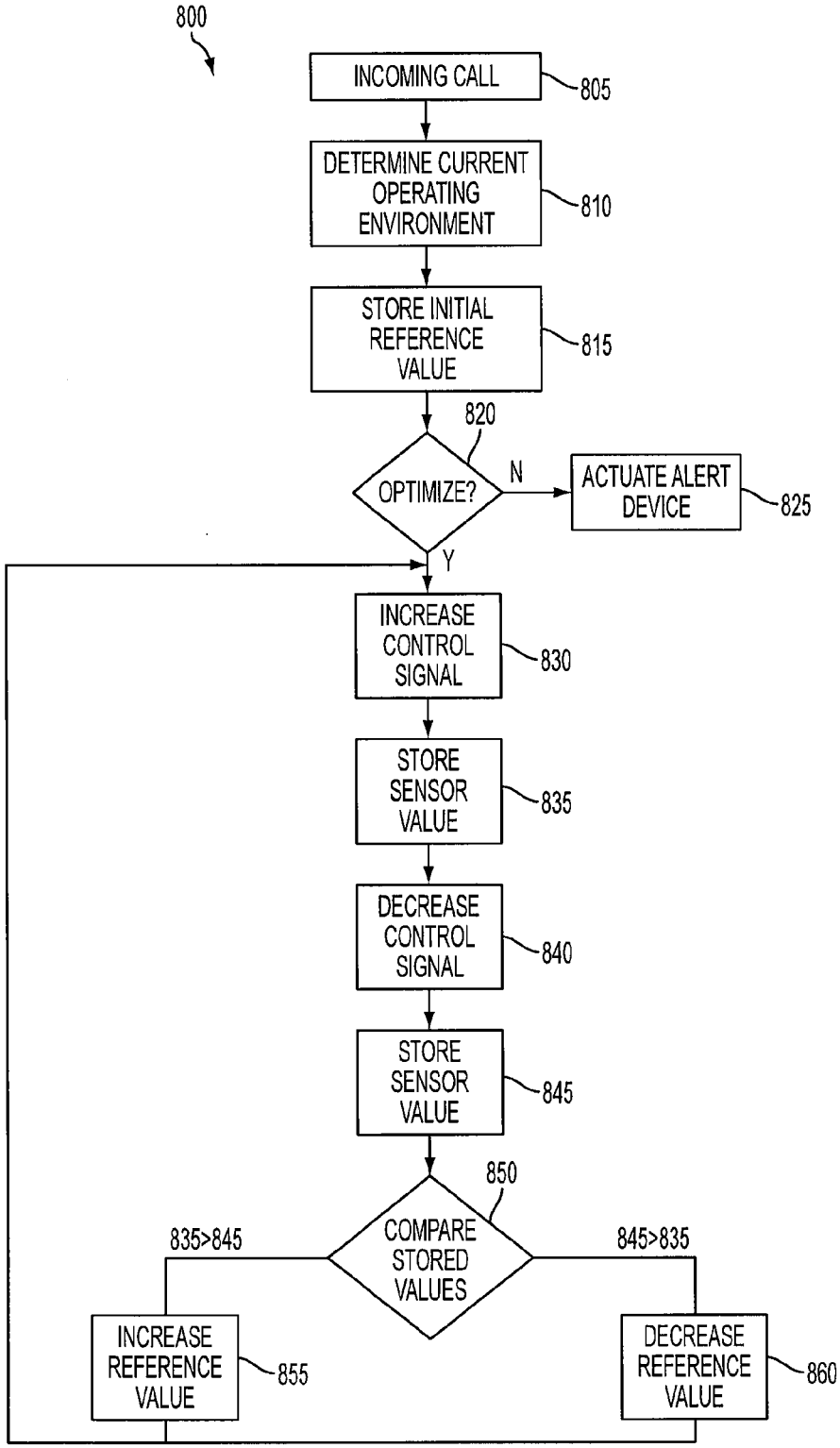
800
INCOMING CALL
805
DETERMINE CURRENT OPERATING ENVIRONMENT
810
STORE INITIAL REFERENCE VALUE
815
820
OPTIMIZE?
N
ACTUATE ALERT DEVICE
825
Y
INCREASE CONTROL SIGNAL
830
STORE SENSOR VALUE
835
DECREASE CONTROL SIGNAL
840
STORE SENSOR VALUE
845
850
COMPARE STORED VALUES
835>845
845>835
INCREASE REFERENCE VALUE
855
DECREASE REFERENCE VALUE
860

FIG. 8

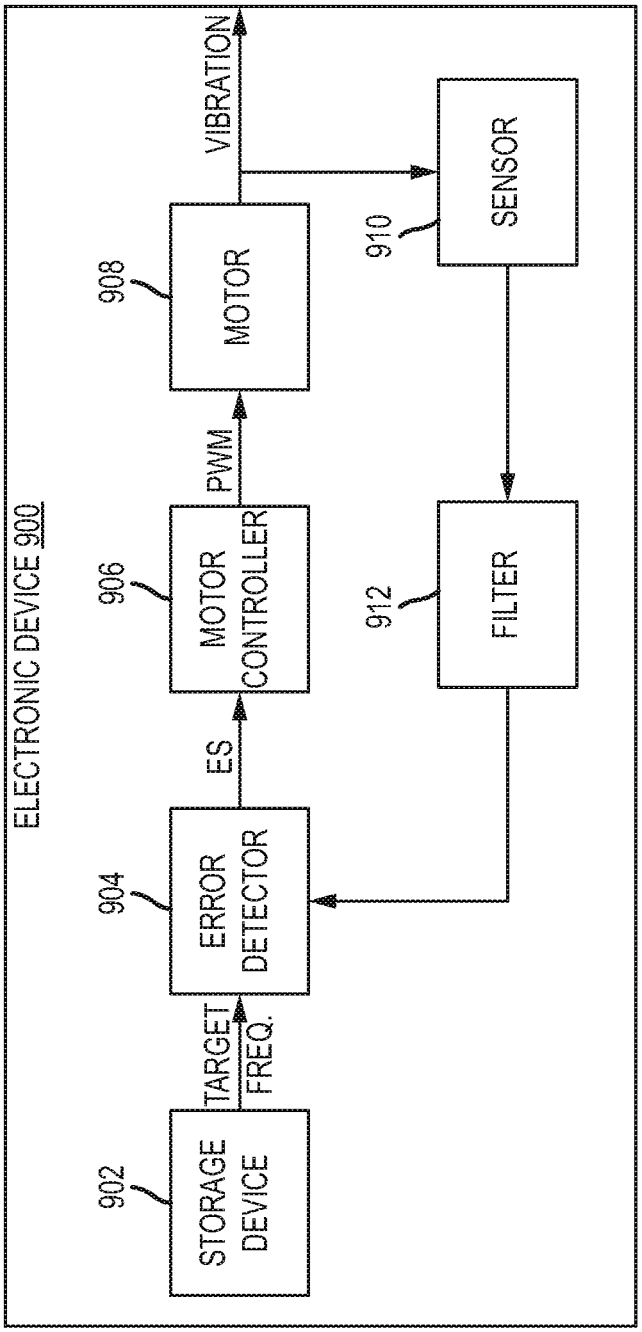
ELECTRONIC DEVICE 900
902
STORAGE DEVICE
TARGET FREQ.
904
ERROR DETECTOR
ES
906
MOTOR CONTROLLER
PWM
908
MOTOR
VIBRATION
910
SENSOR
912
FILTER

FIG.9

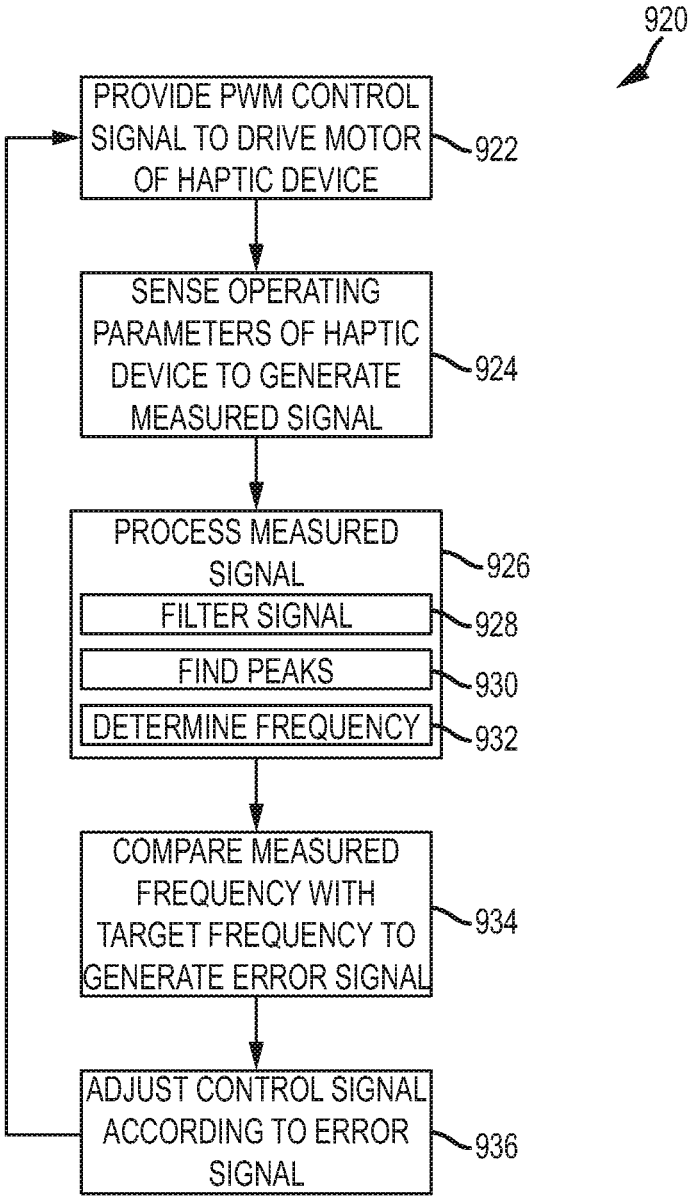
920
PROVIDE PWM CONTROL SIGNAL TO DRIVE MOTOR OF HAPTIC DEVICE
922
SENSE OPERATING PARAMETERS OF HAPTIC DEVICE TO GENERATE MEASURED SIGNAL
924
PROCESS MEASURED SIGNAL
926
FILTER SIGNAL
928
FIND PEAKS
930
DETERMINE FREQUENCY
932
COMPARE MEASURED FREQUENCY WITH TARGET FREQUENCY TO GENERATE ERROR SIGNAL
934
ADJUST CONTROL SIGNAL ACCORDING TO ERROR SIGNAL
936

FIG.10

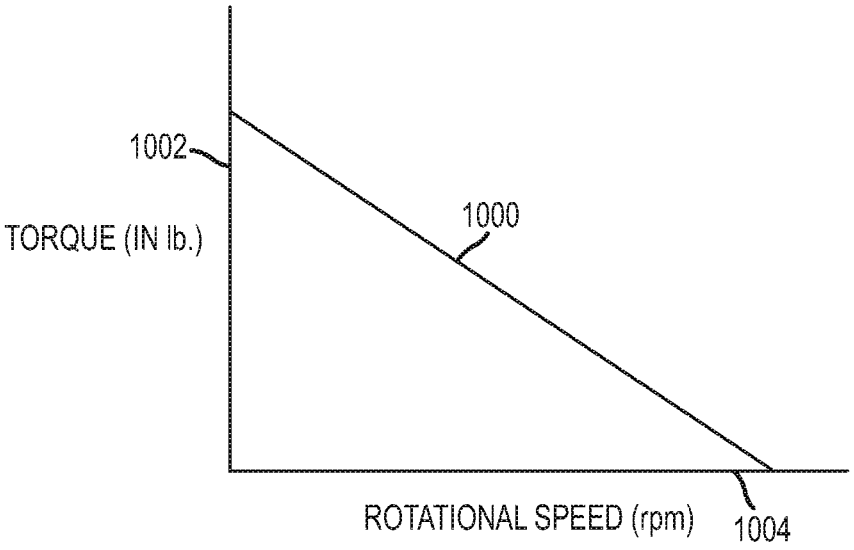
1002
TORQUE (IN lb.)
1000
ROTATIONAL SPEED (rpm)
1004

FIG.11

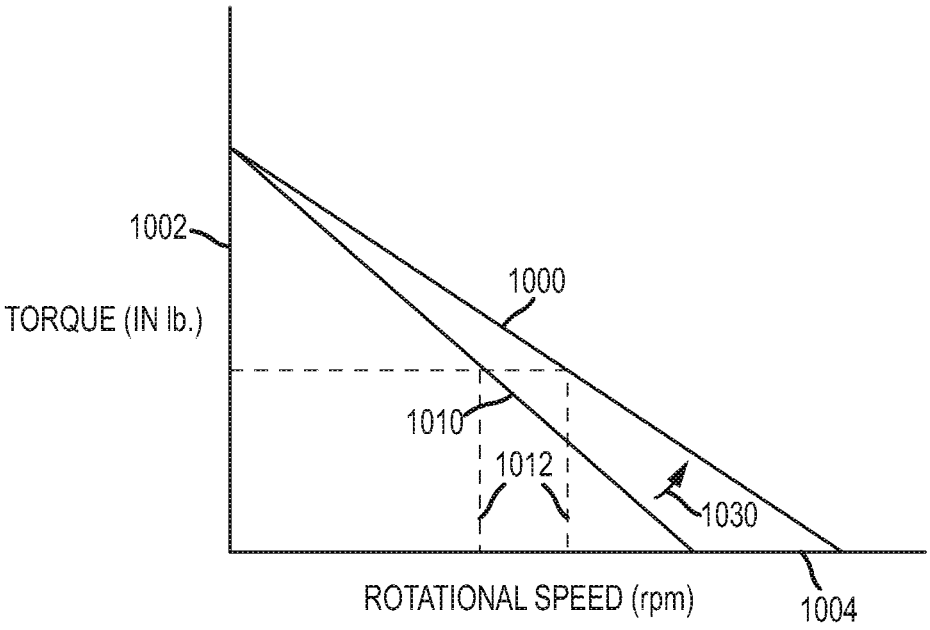
1002
TORQUE (IN lb.)
1000
1010
1012
1030
ROTATIONAL SPEED (rpm)
1004

FIG.12

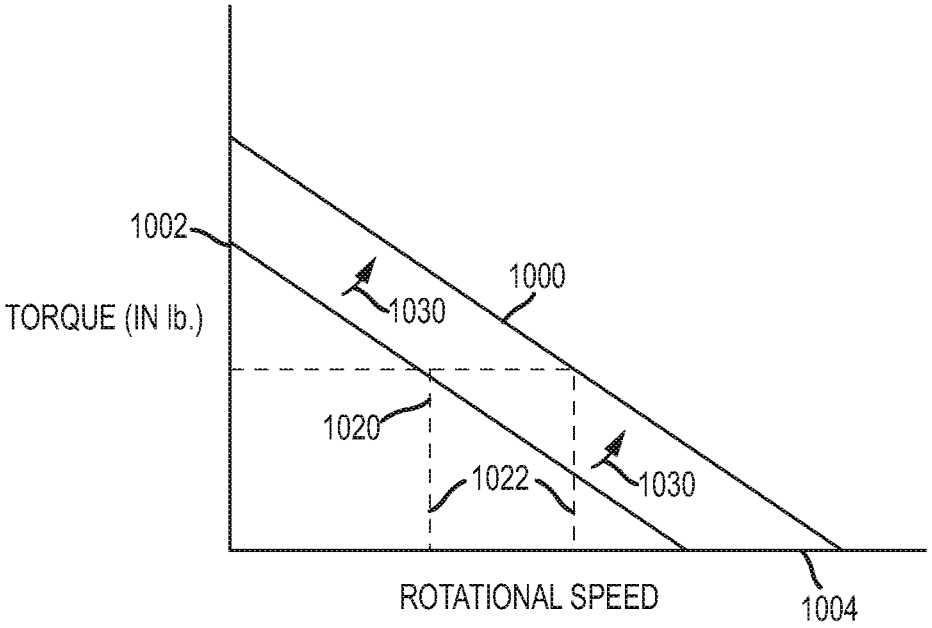
1002
TORQUE (IN lb.)
1000
1030
1020
1022
1030
ROTATIONAL SPEED
1004

FIG.13

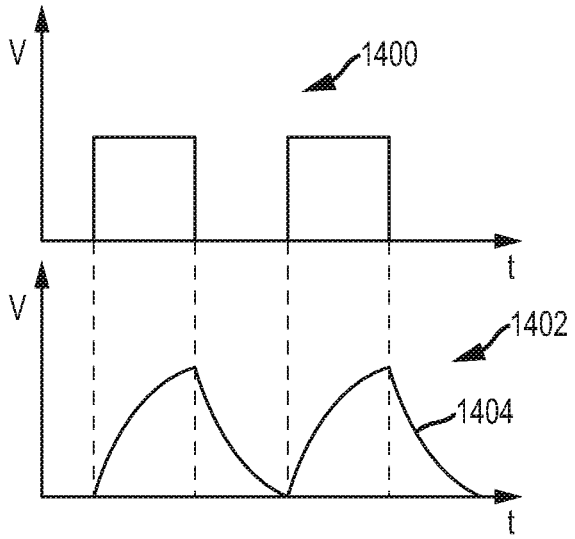

FIG.14

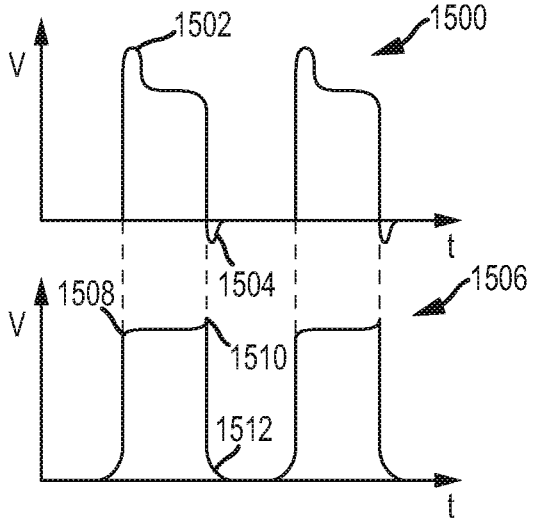

FIG.15

SELF ADAPTING HAPTIC DEVICE

CROSS-REFERENCE TO RELATED APPLICATIONS

The present application is a divisional of U.S. patent application Ser. No. 13/943,639, filed Jul. 16, 2013, titled "Self Adapting Haptic Device, which is a continuation of U.S. patent application Ser. No. 12/750,054, filed on Mar. 30, 2010, titled "Self Adapting Haptic Device," which is a continuation-in-part of U.S. patent application Ser. No. 12/571,326, filed on Sep. 30, 2009, titled "Self Adapting Alert Device," which applications are incorporated by reference as if fully disclosed herein.

TECHNICAL FIELD

The present invention relates generally to haptic devices in electronic systems, and more particularly to a self adapting haptic device.

BACKGROUND

Electronic devices are ubiquitous in society and can be found in everything from wristwatches to computers. Many of these electronic devices are portable and also include the ability to obtain a user's attention through the use of an alert device. For example portable electronic devices like cellular phones and watches contain alert devices such as vibrating motors, speakers, and/or lights to attract the user's attention. Because of their portable nature, many of these portable electronic devices are made as small as possible by miniaturizing the components therein. As part of this miniaturization effort, the alert devices in the electronic devices are often made as small as possible in order to conserve space. However, these miniaturized alert devices can be problematic for several reasons.

First, these miniaturized alert devices may be inadequate to obtain the user's attention in a variety of different situations. For example, if the user of a cell phone is in an environment where there is a great deal of ambient noise, such as a concert or live sporting event, then the user may be unable to see a visual alert from a miniaturized light on the phone, hear an auditory alert from a miniaturized speaker in the phone and/or unable to detect vibration coming from the phone's miniaturized vibration motor.

Additionally, because of electronic devices often contain slight variations in the way they were manufactured, the actual response of the alert device within the electronic device may vary between electronic devices. In other words, slight variations in the actual manufacturing of an electronic device may cause the electronic device to react differently to the same force driving the alert device. For example, the vibration frequency may vary between phones of the same make and model because of manufacturing tolerance, and therefore, the same amount of vibration from a vibrating motor may unintentionally produce different levels of user alerts. Furthermore, performance variation may occur over time due to bearing wear, dust, oxides on brushes, and/or temperature changes.

Thus, methods and systems that adaptively adjust the alert devices within electronic devices to overcome one or more of these problems are desirable.

SUMMARY

Methods and apparatuses are disclosed that allow an electronic device to autonomously adapt one or more user alerts of the electronic device. For example, some embodiments may include a method for operating a haptic device including driving a haptic device using a control signal, measuring a frequency related to the operation of the haptic device and comparing the measured frequency with a target frequency. A control signal is adjusted based on the comparison to drive the haptic device to the target frequency.

Other embodiments may include an electronic device that autonomously adjusts at least one operating parameter of a haptic device. The electronic device includes a haptic device and a sensor configured to monitor the haptic device during operation of the haptic device. A feedback loop is provided that includes a filter coupled to the sensor and an error detector coupled to the filter, wherein the error detector is configured to compare a measured signal with a target signal to generate an error signal. A controller configured to receive the error signal and adjust a control signal in response to the error signal to achieve a desired operational parameter is also provided.

Still other embodiments may include a method of adjusting user alerts in an electronic device. The method including initiating operation of a haptic device by overdriving a control signal provided to the haptic device and actively braking a motor of the haptic device to stop operation of the haptic device.

BRIEF DESCRIPTION OF THE DRAWINGS

FIG. **1** illustrates an electronic device capable of self adapting one or more of its alert devices to obtain the attention of a user in different environments.

FIG. **2** illustrates one operating environment for the electronic device.

FIG. **3** illustrates an alternate operating environment for the electronic device.

FIG. **4** illustrates an alternate embodiment of an electronic device that includes a plurality of motors.

FIG. **5** illustrates a block diagram of an electronic device capable of self adapting one or more of its alert devices to obtain the attention of a user in different environments.

FIG. **6** illustrates a feedback and control system that may allow the electronic device to achieve a target frequency that is customized to the current operating environment.

FIG. **7** illustrates a control signal that may be generated by the feedback and control system shown in FIG. **6**.

FIG. **8** illustrates operations for determining a reference value corresponding to a maximum target frequency corresponding to a current operating environment of the electronic device.

FIG. **9** illustrates an electronic device with a feedback and control system for adjusting operating parameters of a haptic device.

FIG. **10** is a flowchart illustrating operation of the electronic device of FIG. **9** in accordance with an example embodiment.

FIGS. **11-13** illustrate example torque and angular speed curves for a haptic device.

FIGS. **14** and **15** illustrate drive signals and corresponding vibration amplitudes for haptic devices.

The use of the same reference numerals in different drawings indicates similar or identical items.

DETAILED DESCRIPTION

Embodiments of electronic devices are disclosed that allow the electronic device to autonomously observe its current operating condition and adjust its user alerts accordingly. The

electronic device may determine its current operating environment (e.g., indoors, outdoors, contained in a purse or bag, etc.) through a series of sensor measurements. Based upon these sensor measurements the electronic device may both select and/or optimize the user alerts to suit the current operating environment. For example, some embodiments may utilize the sensor measurements to determine which of the possible user alerts is best suited to the current operating environment of the electronic device—e.g., if the current operating environment is indoors in a conference room, then the auditory alerts may not be the most suitable user alert in this operating environment. Other embodiments may utilize the sensor measurements to optimize the user alerts. For example some embodiments may include operating a motor to cause the electronic device to vibrate and obtain the user's attention through tactile sensation. In these embodiments, the sensor measurements may be utilized to actively tune the motor such that the electronic device achieves a target frequency that best corresponds to the current operating environment of the electronic device.

Although one or more of the embodiments disclosed herein may be described in detail with reference to a particular electronic device, the embodiments disclosed should not be interpreted or otherwise used as limiting the scope of the disclosure, including the claims. In addition, one skilled in the art will understand that the following description has broad application. For example, while embodiments disclosed herein may focus on portable electronic devices such as cell phones, it should be appreciated that the concepts disclosed herein equally apply to other portable electronic devices such as the IPOD brand portable music player from Apple Inc. In addition, it should be appreciated that the concepts disclosed herein may equally apply to non-portable electronic devices, such as computer equipment (keyboard, mice, etc.) and/or gaming devices (e.g., gaming controllers). Furthermore, while embodiments disclosed herein may focus on optimizing the vibration output of the electronic devices, the concepts disclosed herein equally apply to other forms of user alerts, such as sound devices and/or light devices. Accordingly, the discussion of any embodiment is meant only to be exemplary and is not intended to suggest that the scope of the disclosure, including the claims, is limited to these embodiments.

FIG. **1** illustrates an electronic device **100** capable of autonomously adjusting one or more of its alert devices to obtain the attention of a user of the electronic device **100** in different environments. For the sake of discussion, the electronic device **100** is shown in FIG. **1** as a cell phone, such as an IPHONE brand cell phone from Apple Inc. The electronic device **100** may include one or more alert devices capable of obtaining the attention of the user of the electronic device **100**, including a vibration motor **102**, a light source **104**, and/or a speaker **106**. FIG. **1** also shows that these alert devices **102**, **104**, and **106** may be coupled to one or more sensors **108** and **110** located within the electronic device **100**. As will be discussed in greater detail below, the sensors **108** and **110** in the electronic device **100** may include devices that measure indications about the environment in which the electronic device **100** is operating. These measurements may include the movement, proximity to the user, location, whether the user is holding the electronic device **100**, ambient light levels, and/or ambient noise levels experienced by the electronic device **100** to name just a few.

In some embodiments, the sensors **108** and **110** may be configured to provide a primary functionality, such as receiving user or environmental input related to applications or programs running on the device. These sensors may be repurposed or additionally used to provide secondary functionality for the device. "Secondary functionality" generally refers to the use of one or more sensors for an operation, or to provide input or output, other than their primary purpose. Thus, a temperature sensor configured to monitor the heat of a casing may also be used to detect a rise in heat from the presence of a user's hand as "secondary functionality."

As another example of secondary functionality, sensor(s) may be used to determine the operating parameters of haptic devices. As a more specific example, measurements from an accelerometer are often primarily used to determine an orientation of the device **100**. However, in some instances, the signals outputted by the accelerometer may be used with interactive software (such as a video game) to provide an additional input device for user gameplay, thereby providing secondary functionality for the accelerometer. Continuing this example, the accelerometer may be repurposed for determining the operation of a haptic device. For example, when the haptic device operates, the accelerometer may be used to indirectly measure the operating parameters (such as frequency) of the haptic device to determine whether there is degradation in the haptic feedback. The accelerometer may compare the range of motion of the haptic device during operation to a stored profile to determine if the haptic feedback is too great or too weak. A feedback control loop may be provided to correct for any deviance from a determined operating range, as described in detail below.

Based these measurements, the electronic device **100** may autonomously decide the most effective way to obtain the user's attention in that particular environment. FIGS. **2** and **3** illustrate two distinct operating environments for the electronic device **100**, where the alert used to obtain the user's attention may vary between these two operating environments. Referring first to the operating environment shown in FIG. **2**, the electronic device **100** may be lying flat on a table **200** such as may be the case when the user is in a classroom or meeting. If the sensors **108** and **110** are implemented as an accelerometer and microphone respectively, then the electronic device **100** may detect that it is in a classroom or meeting by the sensors **108** and **110** reporting no movement from the accelerometer and/or a relatively low ambient noise level from the microphone. Upon detecting that it is operating in this environment, the electronic device **100** may silence any audible alerts to the user, such as when there is an incoming phone call.

Conversely, FIG. **3** illustrates a user **300** carrying the electronic device **100** in a purse **305** where it may be jostled around. If the sensors **108** and **110** are implemented as an accelerometer and an ambient light sensor (ALS) respectively, then the electronic device **100** in this operating environment may detect that it is in a confined space that is dark by the ALS reporting a relatively low ambient light level and that the electronic device **100** is being moved around by the accelerometer reporting movement. This operating environment may require louder user alerts than the situation shown in FIG. **2**, for example, the strength of user alerts, both auditory and vibrations, may be increased in these situations.

Referring again to the electronic device **100** shown in FIG. **1**, the motor **102** shown includes an eccentric weight **112** coupled to a motor body **114** via a shaft **116**. When an electric signal, such as a voltage signal, is applied to the motor body **114**, the shaft **116** begins to rotate causing the weight **112** to move in a substantially orbital path. Because the weight **112** is uneven, as the weight **112** begins to be rotated in this substantially orbital path, the motor **102** begins to vibrate, and as a result, the motor **102** causes the entire electronic device **100** to vibrate. When the electronic device **100** is deployed in different operating environments, the maximum target fre-

quency of the electronic device **100**, or frequency at which the entire electronic device **100** experiences its maximum vibration, may vary between different operating environments. For example, comparing the two operating environments shown in FIGS. **2** and **3**, the electronic device **100** making physical contact with the table **200** will have a different target frequency than the same electronic device **100** being jostled around in the purse **305**. By monitoring the sensors **108** and **110** based upon these measured parameters, the target frequency of the electronic device in these different operating environments may be determined. Furthermore, by actively adjusting the vibration of the motor **102** based upon these measured parameters, the electronic device **100** may be adjusted to achieve this target frequency in different operating environments. That is, the electronic device **100** may actively "tune" itself to its target frequency using measurements obtained from the sensors **108** and **110** and adjusting the motor **102**. In the embodiments where the electronic device **100** is a phone, this active adjustment may occur within the period of a single ring of the phone, such that the phone is ringing at its target frequency before the end of the first ring of an incoming call to maximize the chances of obtaining the user's attention. Similarly, when the electronic device **100** is a multi-function device that includes the ability to check electronic mail, this active adjustment may occur within the period of time it takes to notify the user of a new mail event.

FIG. **4** illustrates an alternate embodiment of an electronic device **400**, which includes a plurality of motors **402-408** coupled to the sensors **409** and **410**. As shown, in this embodiment, the plurality of sensors **402-408** may be in different locations within the electronic device **400** so as to vibrate different portions of the electronic device **400**. In this embodiment, the target frequency of the electronic device **400** may be achieved by actuating the plurality of motors **402-408** in different patterns, where the pattern of actuating the plurality of motors **402-408** varies according to the different operating environments of the electronic device **400**. For example, if the electronic device **400** is located within the purse **305** as shown in FIG. **3** and the sensors **409** and **410** indicate that one end **412** of the electronic device is touching the bottom of the purse **305** and the other end **414** is not touching the bottom of the purse **305**, then the motors **402** and **408** may be actuated to achieve the target frequency of the electronic device **400** while the other motors in the plurality **404** and **406** are not actuated. Thus, the electronic device **400** may be tuned to its target frequency in different environments by selectively actuating one or more of the motors within the plurality **402-408**.

FIG. **5** illustrates a block diagram of an electronic device **500** that may be employed in the embodiments shown above. As shown, the electronic device **500** includes a plurality of sensors **502-512** that couple to a processor **516**. These sensors **502-512** may be used alone or in combination to determine the current operating environment of the electronic device **500**. The microprocessor **516** may be further coupled to one or more alert devices **518-522**.

As was mentioned above, the ALS **502** senses the ambient light of the environment that the electronic device **500** is in and reports this information to the processor **516**. When the processor **516** receives this ambient light information, it can modify alert operations of the electronic device **500** accordingly. Thus, in the embodiments where the electronic device **500** is a phone, if ambient light measurements indicate that the level of ambient light is relatively high, then alert mechanisms other than the light **518** may be used to obtain the user's attention, such as the motor **520** and/or speaker **522**, because the light **518** may be unperceivable to the user because the ambient light conditions. As was mentioned above, the information from the sensors may be combined such that the ambient light measurement from the ALS **502** may be used in conjunction with other measurements, such as ambient noise level, to detect a current operating environment of the electronic device **500**.

The microphone **504** may sample the ambient noise level of the environment that the electronic device **500** is in and report this information to the processor **516**. Thus, the microphone **504** may indicate that the ambient noise level is too high for the speaker **522** to obtain the user's attention, and therefore, alert mechanisms other than the speaker **522** may be used to obtain the user's attention, such as the motor **520** and/or the light **518**. In the embodiments where the electronic device **500** is a phone, then the microphone **504** may be the microphone used by the user of the electronic device **500** when using the phone.

The infrared (IR) detector **506** may detect a user's proximity to the electronic device **500** and report this information to the processor **516**. In some embodiments, the IR detector **506** may include one or more solid state sensors, such as pyroelectric materials, which detect heat from a user's body being near the electronic device **500**. In other embodiments, the IR sensor may include a light emitting diode (LED) that emits infrared light which bounces off a user in close proximity to the electronic device **500** and is detected by an IR sensor that is based upon a charge coupled device (CCD), where the CCD may detect reflected IR light emitted by the LEDs. In still other embodiments, a photoresistor may be used in place of or in conjunction with the CCD. Regardless of the actual implementation of the IR detector **506**, the IR detector **506** may convey its signal to the processor **516** as an indication of a user's presence near the electronic device **500**, and this indication may be used in conjunction with one or more of the other sensors to determine the current operating environment of the electronic device **500**.

The camera **508** may capture certain visual queues for use in determining the operating environment of the electronic device **500**. In some embodiments, the camera **508** may be integrated within the ALS **502**. In other embodiments, the camera **508** may be located on a separate portion of the electronic device **500** and may be used to confirm measurements from one of the other sensors, such as the ALS **502**. For example, in the event that the electronic device **500** is implemented as a phone and the ALS **502** is positioned on one side of the phone, such as the face side that the user positions against their head when using the phone, and the camera **508** is positioned on the opposite side of the electronic device **500** as the ALS **502**, then the camera **508** may be used to confirm measurements indicating that the phone is in a certain operating environment.

Furthermore, in some embodiments, measurements from the camera **508** may be used to provide additional information regarding the operating environment of the electronic device **500**. For example, if the electronic device **500** is implemented as the phone shown in FIG. **2**, where the phone is lying face down, and the ALS **502** is located on the face of the phone while the camera **508** is located on the opposite side of the phone, then by the ALS **502** indicating that it is receiving substantially no light while the camera **508** indicates that it is receiving light, then may indicate that the phone is lying face down on the table.

The accelerometer **510** may indicate the general orientation of the electronic device **500**. In some embodiments, this indication may be through measurement of a damped mass on an integrated circuit, such as a micro electro-mechanical system (MEMS) For example, the accelerometer **510** may

include one or more "in-plane" MEMS accelerometers, which are sensitive in a plane that is parallel to the sensing element (such as the damped mass), and therefore multiple dimension (such as two and three dimension accelerometers) may be formed by combining two or more in-plane accelerometers orthogonal to each other. Other embodiments may utilize out-of-plane MEMS accelerometers, which are sensitive to positional movements in a direction that is in a plane that is perpendicular to the sensing element (sometimes referred to as Coriolis movement). Some embodiments may combine one or more in-plane MEMS sensors with one or more out-of-plane MEMS sensors to form the accelerometer **510**. As mentioned above, the accelerometer **510** may be used to determine orientation of the electronic device **500** (such as face up, face down, tilted, etc.) and/or whether the electronic device **500** is being jostled about by the user (such as inside of the purse **305** shown in FIG. **3**). By providing the measurements from the accelerometer **510** to the processor **516** in addition to measurements from other sensors, the processor **516** may combine the measurements and confirm of the other sensors. For example, if the combination of the ALS **502** and the camera **508** indicate that the electronic device **500** is lying face down (as discussed above with regard to FIG. **2**), then the processor **516** may utilize measurements from the accelerometer **510** to confirm this positional information.

The global positioning system (GPS) sensor **511** may indicate the position of the electronic device **500** with respect to the latitude and longitude coordinates of the Earth as determined by signals from a plurality of geosynchronous satellites orbiting the Earth. Since the GPS sensor **511** may be unable to receive satellite signals while indoors, the GPS sensor **511** may be used to detect whether the electronic device **500** is indoors or outdoors, and the processor **516** may adjust the alerts accordingly.

The capacitive screen sensor **512** may detect whether the user is making contact with the electronic device **500**, and/or how much contact the user is making with the electronic device. For example, if the user is holding the electronic device **500** in their pocket, then the capacitive screen sensor **512** may indicate a certain capacitance level associated with the user's body. On the other hand, in the event that the electronic device **500** is located the purse **305** as shown in FIG. **3**, then the capacitive screen sensor **512** may indicate a different capacitance associated with the fabric of the purse **305**. Also, when the capacitive screen sensor **512** senses substantially no capacitance value, then the electronic device **500** may be on a table **200** as shown in FIG. **2**.

Table 1 illustrates how values from the capacitive screen sensor **512** may be confirmed by the other sensors, such as the ALS **502**. For example, when the ALS indicates that the ambient light level is low, such as when the phone may be in a pocket or in the purse **305**, then the capacitive screen sensor **512** may be consulted by the processor **516** to determine if the capacitance value corresponds to human versus non-human capacitance so that the processor **516** may determine the operating environment an adjust the user alerts accordingly. Similarly, in the event that the capacitive screen sensor **512** indicates that substantially no capacitance is measured, then the ALS **502** may be consulted to determine if the light level is high indicating that the operating environment is on the table **200** in a bright room or, if the light level is low, indicating that the operating environment is on the table **200** in a dark room, such as a night stand. The processor **516** then may adjust the alerts accordingly, such as by silencing alerts from the speaker **522** in the event that the electronic device **500** is on a night stand.

TABLE 1

		ALS 502	
		High	Low
Capacitive Screen Sensor 512	Full screen, human		In pocket
	Full screen, non-human		In purse
	Nothing	On conference table	On night-stand

Referring still to FIG. **5**, each of the sensors **502-512** may be used by the processor to optimize the performance of the light **518**, the motor **520** and/or the speaker **522** to the operating environment of the electronic device **500**. FIG. **6** depicts a block diagram of an illustrative feedback and control system **600** that may be implemented by the electronic device **500** to control the motor **520** such that its movement allows the electronic device **500** to achieve a target frequency that is customized to the operating environment. As shown in block **605** of FIG. **6**, the control system **600** may include a storage unit **605** that includes a reference value that is reported to other items in the control system **600**. For the sake of discussion, this disclosure will discuss the reference value as based upon an accelerometer measurement, although it should be appreciated that this measurement may be based upon a wide variety of sensors, such as one or more of the sensors **502-512**. Also, the reference value in the storage unit **605** may be a combination of measurements from more than one of the sensors **502-512**.

The control system **600** may include an error detector **610** coupled to the storage unit **605** and the accelerometer **510**. The accelerometer **510** may report its measurements to the error detector **610** in the same form as the reference measurements stored in the storage unit **605**. As was mentioned above, measurements from the accelerometer **510** may represent movement of the electronic device **500** in the current operating environment of the electronic device **500**, and as a result, the measurements from the accelerometer **510** may be used to measure the target frequency of the electronic device **500**. During operation, the error detector **610** may compare the reference value stored in the storage unit **605** with the current measurement from the accelerometer **510** and output an error signal E_s.

The error detector **610** may couple to a motor controller **615** and thereby provide the error signal E_s to the controller **615**. The controller **615** may utilize the error signal E_s in controlling the input signals to the motor **520**, such as by generating a control signal that is proportional to the difference between the reference value stored in the storage unit **605** and the accelerometer **510**. As mentioned above, the electrical signal applied to the motor **520** may be a voltage, and therefore, the control signal generated by the motor controller **615** may vary one or more aspects of the voltage that is applied to the motor **520**. For example, control of the motor **520** may be accomplished by varying the amplitude, frequency, and/or duty cycle of the voltage that is applied to the motor **520**.

In some embodiments, the motor **520** may be controlled using a pulse width modulated (PWM) signal. This PWM signal may allow more robust control of the motor **520** than conventional methods, such as an on/off control. In these embodiments, the PWM signal may be used to initially overdrive the motor **520** to reduce the rise time or 'spin up' for the motor **520** thereby producing a sharper turn on of the motor **520**. Similarly, in these embodiments, the PWM signal may be used to underdrive the motor **520**, or inductively brake the

motor **520**, so as to achieve a sharper turn off of the motor **520**. This sharper on and off action of the motor **520** may result in more noticeable tactile sensations to a user when using the motor **520** as an alert device.

FIG. **7** illustrates varying the frequency of the control signal where the frequency varies with respect to time. Note that the varying frequency may be monotonically increasing during each cycle of the control system **600** (section **705**), unchanged during each cycle of the control system **600** (section **708**), monotonically decreasing during each iteration of the control system **600** (section **710**), or be dithered between two or more values during each cycle of the control system **600** (section **715**).

Referring back to the control system **600** shown in FIG. **6** in conjunction with the electronic device **500** shown in FIG. **5**, in some embodiments, the storage unit **605**, error detector **610**, and motor controller **615** may be incorporated into the microprocessor **516**. Thus, during operation, the microprocessor **516** may sample values from the accelerometer **510** (which represents movement of the electronic device **500** within its current operating environment) and actively control the motor **520** such that the error signal E_s is minimized and the reference value stored in the storage unit **605** is achieved. The reference value that is stored in the storage unit **605** may be modified autonomously by the electronic device so that the control system **600** is actively tuning itself to this changing reference value. By changing the reference value stored in the storage unit **605**, and tracking the measurements from the accelerometer **510** in response to this varying reference value, the target frequency of the electronic device **500** in its current operating environment may be calculated. For example, as the reference value is varied, the reference value that causes the electronic device **500** to achieve maximum resonance in the current operating environment (as measured by the accelerometer **510**), may be stored in the storage unit **605**.

FIG. **8** illustrates operations **800** for determining a reference value corresponding to a target frequency of the electronic device. The target frequency of the electronic device may be a resonant frequency of the electronic device **500** in its current operating environment, or alternatively, may be a frequency of the device that maximizes a user's perception of the alert. It should be appreciated that the operations shown in FIG. **8** are illustrative, and that other operations for determining a reference value may be performed in other embodiments. The operations **800** are discussed herein in the context of the electronic device **500** being a phone that is receiving an incoming call, however, the operations **800** may be applied in other contexts, such as in the context of a personal digital assistant (PDA) alerting a user to an appointment for example.

Referring now to FIG. **8**, block **805** shows the electronic device **500** receiving an incoming call. Generally, the duration of a single ring for an incoming call may be five seconds and the phone may ring for a total of five rings before being transferred to voicemail, or twenty five seconds. In some embodiments, the operations **800** may be triggered when the electronic device **500** beings to ring on the first ring and complete within this first ring, and therefore the block **805** occur on first ring. In other embodiments, the operations **800** may occur on a subsequent ring and complete within that subsequent, and therefore the block **805** may be a subsequent ring. In still other embodiments, the operations **800** may begin at the beginning of the first ring and complete before the phone transfers the call to voicemail.

Once the electronic device **500** receives an incoming call, the electronic device **500** will detect the current system state per block **810**. For example, the microprocessor **516** may observe the values of one or more of the sensors **502-512** to determine their values, and as was discussed above, based upon one or more of these measurements, the electronic device **500** may predict the operating environment of the electronic device (e.g., on a table as shown in FIG. **2** versus in the purse **305** as shown in FIG. **3**).

Next, in block **815**, the initial reference value may be loaded into the storage unit **605**. The initial reference value to be stored may correspond to an initial estimation of the reference value that matches the current operating environment. For example, momentarily to FIGS. **3** and **6**, if the processor **516** determines that the phone is in the purse **305**, then the processor **516** may consult a lookup table to determine a predetermined reference value to be stored in the storage unit **605** such that the initial target frequency achieved by the control system **600** generally corresponds to the phone being located in the purse **305**. This initial target frequency stored in the storage unit **605** may be optimized by subsequent operations.

Referring back to FIG. **8**, block **820** includes a decision block to determine whether the initial reference value is to be optimized. In the event that no optimization is desired, such as when the control system **600** determines that the initial reference value achieves a target frequency that is within a threshold of a predetermined maximum target frequency, then control may flow to block **825**, where the motor **520** may be actuated corresponding to the initial reference value.

On the other hand, in the event that the block **820** determines that optimization is desired, then a dithering process may be utilized to determine the target frequency of the electronic device **500**. This dithering process may begin in block **830** where the control signal provided to the motor **520** may be increased, for example, by increasing the frequency as illustrated in the section **705** of FIG. **7**. In block **835**, each time the control signal is increased by the controller **615**, this value may be stored for determination of the target frequency of the electronic device **500**. Next, in block **840** the control signal provided to the motor **520** may be decreased, for example, by decreasing the frequency with the controller **615** as illustrated in the section **710** of FIG. **7**. In block **845**, each time the control signal is decreased, this value may be stored for determination of the target frequency of the electronic device **500**.

Next, in block **850**, the microprocessor **516** may compare the values stored in blocks **835** and **845** and adjust the reference value in the storage unit **605** accordingly. For example, if the value stored during block **835** is greater than the value stored during block **845**, then increasing the control signal per block **830** may result in the electronic device **500** getting closer to its target frequency than decreasing the control signal per block **840**. Thus, the controller **615** may increase the frequency of the control signal to the motor **520** by increasing the reference value stored in the storage unit **605** per block **855** and then control may flow back to block **830** where the dithering process begins again.

Likewise, if the value stored during block **845** is greater than the value stored during block **835**, then decreasing the control signal per block **840** may result in the electronic device **500** getting closer to its target frequency than increasing the control signal per block **830**. Thus, the controller **615** may decrease the frequency of the control signal to the motor **520** by increasing the reference value stored in the storage unit **605** per block **860** and then control may flow back to block **830** where the dithering process begins again.

The dithering operations shown in blocks **830-845** are merely illustrative of the operations that may be implemented in determining the maximum target frequency of the electronic device **500** in its current operating environment and the

operations **800** shown in FIG. **8** may vary in other embodiments. For example, in some embodiments, there may be a disproportionate number of increases (block **830**) in the control signal compared to decreases (block **840**) in the control signal or vice versa. Also, in some embodiments, instead of modifying the frequency of the control signal, other portions of the control signal, such as the duty cycle or amplitude of the voltage, may be modified during the dithering process.

In still other embodiments, the maximum target frequency may be determined by stepping through reference values incrementally. For example, the reference value stored in the storage unit **605** may be substantially zero (e.g., on the order of several hertz) and this reference value may be stepped up from this initial value to a maximum reference value. As this reference value is stepped and the control system **600** reacts to this changing reference value, the measurement of the accelerometer **510** may be stored by the processor **516** in order to find a maximum target frequency of the electronic device **500**. By stepping through a range of reference values in this manner, the processor **516** may determine if there are multiple harmonic target frequencies in the target frequency spectrum of the electronic device **500** and determine which of these harmonics produces the largest target frequency of the electronic device **500**.

Because one or more characteristics of the motor **520** may vary as a function of temperature (e.g., the electrical resistance of windings in the motor may increase with temperature), wear (e.g., the brushes that commutate the windings in the motor **520** may have an increasing the electrical resistance over time), and/or friction (e.g., the internal bearing structures of the motor **520** may have an increase in the amount of friction over time, causing the motor to spin more slowly in response to applied voltage). These characteristics may include macro scale changes due to aging and wear and/or micro scale changes due to temporary heating in a hot car or due to the generation of heat in the motor windings during operation. Using one or more of the above identified methods, the motor **520** may be operated in such a manner so as to counteract one or more of these effects. For example, using a PWM control signal, in conjunction with measurements from the one or more sensors, changes in performance of the motor **520** as a function of time may be compensated for. Such measurements could be inferred indirectly from measurements of the armature resistance of the motor **520** (e.g., to compensate for temperature/brush wear) or directly from measurements of motor speed at a known duty cycle (e.g., using the accelerometer **510**). In addition, while these degradations in performance may be compensated for, they may also be used to trigger a repair or diagnostic history to be communicated to the user, or to the manufacturer or seller of the device.

FIG. **9** illustrates an example electronic device **900** having a feedback loop for controlling the operating parameters of a haptic device. The electronic device **900** may include any or all of a storage device **902**, an error detector **904**, a motor controller **906**, a motor **908**, a sensor **910** and a filter **912**, as shown, as well as other components and/or devices. The motor controller **906** may utilize an error signal provided from the error detector **904** to control the operating signals provided to the motor **908**. In particular, the motor controller **906** may adjust the frequency, amplitude and/or duty cycle of a PWM control signal to control the operating parameters of the motor **908**.

Turning to FIG. **10**, a flowchart **920** illustrating operation of the electronic device **900** in accordance with the embodiment of FIG. **9** is shown. Generally, the flowchart **920** relates to using an accelerometer to sense vibrations of a haptic device. However, it should be appreciated that the same or similar steps to those shown in the flowchart **920** may be implemented with other sensors and other haptic (or other output) devices to achieve a desired level of control for such devices. For example, thermocouples, gyroscopes, compasses, and so on may be used to monitor or sense parameters related to the operation of a motor used in a fan or a hard drive and provide a feedback signal. In some embodiments, the measurements may be taken directly while in other embodiments, indirect measurements may be taken. That is, it should be appreciated that in some embodiments, effects of the operation of the motor is measured (i.e., the vibration from the motor) rather than the actual operation parameters. For the purposes of this discussion, however, the term "operating parameters refers" to measurements related to the operation of the motors and is not exclusive to either the effects of operation or the actual operation parameters.

In some embodiments, one or more sensors may be repurposed from a primary purpose, or additionally used, to sense the operation of the motor. For example, an accelerometer may be repurposed to determine the operating frequency of a haptic device. That is, measurements from an accelerometer may generally be used to determine an orientation of the device **100** and/or may be used with interactive software, such as a video game, to provide an additional input device for user gameplay as primary purposes. Upon actuation of a haptic element, the accelerometer may be repurposed to measure the operating parameters of the haptic element, such as the amount of vibration induced in the device **100** by the haptic element. As such, it should be appreciated that a sensor(s) already provided with a particular electronic device may be used to monitor the operation of a haptic element.

Returning to FIG. **10**, a PWM control signal is provided from the controller **906** to the motor **908** to drive the motor (Block **922**). As voltage is provided to the motor **908** via the PWM control signal, current rises and drives the motor which results in a vibration/acceleration output that may be sensed by a user. The operation of the motor is also sensed by sensor **910** to generate a measured signal (Block **924**). The measured signal is then processed (Block **926**). In one embodiment, an output of the sensor **910** is filtered with a bandpass or notch filter **912** to allow vibrations having frequencies near the target operating frequency of the haptic element to be passed through for further processing, thus eliminating acceleration measurements unrelated to the motor (Block **928**). Peaks within the filtered signal are found (Block **930**) and the frequency of the measured signal is then determined (Block **932**). The finding of peaks of the filtered signal may be used to determine a period of the measured signal. The period may then be converted into a frequency signal, for example, for a comparison as detailed below with respect to Block **934**. Generally, if the period is determined to be longer than a period corresponding to the target frequency, it indicates that the motor is operating at a speed slower than the target frequency.

In some embodiments, the error detector **904** may include software, hardware and/or a combination of the two and may be configured to convert the filtered signals from the sensor **910** and filter **912** into a signal having units indicative of an operating parameter of the motor **908**, such as frequency, temperature, angular velocity, and so on. In other embodiments, discrete components other than the error detector **904** may be used to convert the measured signal into units that may indicate an operating parameter for the motor **908**.

The measured frequency is compared with a target frequency provided from the storage device **902** to the error detector **904** to generate an error signal (Block **934**). The

generated error signal is provided to the motor controller **906** and the control signal is adjusted according to the error signal (Block **936**). In one embodiment, a duty cycle of a PWM control signal may be adjusted by the motor controller **906** to achieve the target frequency. For example, to increase the current in the motor armature, the duty cycle of the PWM control signal may be increased. The control signal is then provided to the motor **908** to drive the motor (Block **922**).

In some embodiments, the motor controller **906** may store or have access to information related to the target frequency and/or the torque and angular speed curve information so that it may appropriately adjust the control signal to achieve the target frequency. As such, in some embodiments, the information accessible by the controller **906** may serve as a reference point for the operation of the haptic element to determine changed circumstances related to the operation of the haptic element over time, thus allowing for adjustment of the operating parameters to achieve and/or maintain operations at or near desired operating parameters.

FIGS. **11-13** illustrate example torque and angular speed curves. In particular, FIG. **11** illustrates an example torque and angular speed curve **1000** which may be representative for the motor **908**. The vertical axis **1002** represents the torque which may have suitable units such as inches pounds or the like, while the horizontal axis **1004** represents the angular speed which may have suitable units such as revolutions per min (RPMs) or the like. In some embodiments, the curve **1000** may be generally linear, as illustrated, while in other embodiments the curve may be non-linear.

FIG. **12** illustrates sample torque and angular speed curves **1000**, and a sample pivoted curve **1010**, after the motor **908** has experienced wear, aging, and/or other effects that increase the friction of the motor and degrade the operation of the motor **908**. Generally and as shown in the pivoted curve **1010**, the increased friction causes the curve **1010** to pivot downward from a point along the vertical axis resulting in lower operating speeds. FIG. **13** illustrates the torque and angular speed curve **1000** and a shifted curve **1020** resulting from high operating temperatures. As shown, the shifted curve **1020** results also in lower operating speeds. In FIGS. **12** and **13**, the dashed lines **1012** and **1022** indicate the lower speeds achieved when the motor operates at a constant torque. The lowered speeds illustrated by the pivoted curve **1010** and the shifted curve **1020** and indicative of slower operating speeds for the motor **916** may also result in poor performance of a haptic element as it is not operating at the target frequency.

In order to achieve operation at the target frequency, the speed of the motor **916** may be increased by adjustment of the PWM control signal. Specifically, the duty cycle of the PWM control signal can be adjusted to increase the current in the armature of the motor **908** and thereby increase the speed of the motor to achieve the target frequency. Thus, the PWM control signal allows for adjustments to be made to the operating parameters of the motor while providing a constant voltage level signal and acts as a variable voltage drive without actual varying the voltage level.

The increased current increases the PWM cycle of the motor, and thus moves the pivoted curve **1010** and the shifted curve **1020** so that they reflect the original curve **1000**, as indicated by arrows **1030** in FIGS. **12** and **13**. It should be appreciated that the pivoted and shifted curves **1010** and **1020** and the corresponding shifts due to increased current are simply presented as examples. In other contexts, due to certain operating conditions, the curves may be shifted and or pivoted in an opposite direction.

In addition to testing and adjusting of the operating parameters of the motor **908**, periodically or at random intervals, the operating parameters may be tested for informational purposes. That is, the operation of the motor may be audited to discover how the motor is performing. This may be useful to a manufacturer or reseller to know how an installed base of motors is performing. Thus, the information related to the operation of the motor (i.e., the information collected by the sensor **910**) may be transmitted or provided to a computer database owned, operated or accessed by a manufacturer, for example, for informational purposes. The transmittal of the information may be via any suitable mode including wired and wireless modes. Moreover, the transmittal may be passive and unnoticeable to a user of the device. In some embodiments, the information may be provided to a user interface of the device in which the haptic element is operating to inform a user of any performance issues. This may be useful for knowing when a cooling fan is not operating properly, for example, so that it may be fixed before a system overheats or to know when a hard disk drive is beginning to fail.

In the foregoing examples, it should be appreciated that the motion of a device is measured to control a haptic element within the device. Thus, not only is the sensor (e.g., accelerometer) being used for a secondary purpose, it also takes an indirect measurement in order to tune the haptic (or other) device. The feedback loop may include one or more sensors and the sensors implemented may take various different measurements. For example, in some embodiments, a thermocouple may be used for measuring a device temperature to infer a motor operating temperature. In another embodiment, a microphone may be used for measuring a ringtone volume or quality. In some embodiments, the microphone may also be used to determine a volume for a hard disk drive when spinning. In some embodiments, a gyroscope may be used to determine acceleration of a device when a vibrating haptic element is actuated.

In some embodiments, the ramp up and stopping of motors may be improved. FIGS. **14** and **15** illustrate drive control curves with corresponding vibration amplitudes. Specifically, FIG. **14** illustrates a traditional on/off drive control signal **1400** for the motor **908** with voltage in the vertical axis and time in the horizontal axis. A corresponding vibration amplitude curve **1402** is illustrated below the traditional drive control signal. The vibration amplitude has a sawtooth form **1404** because the mechanical time constant of the vibration motor may be long with respect to the input signal, resulting in a slow rise time and a "soft" feel to transition between on an off vibration.

In contrast, FIG. **15** illustrates a drive control curve **1500** and a corresponding vibration amplitude curve **1506** achievable using PWM control signals. As illustrated, the drive control curve **1500** is overdriven in the rise **1502** and in the spin down **1504**, resulting in crisper rise time in the vibration amplitude **1508** and in the vibration spin down **1510** and **1512**. Generally, the rise time can be overdriven in a PWM control signal by increasing the duty cycle of the signal. The spin down time after an one signal can be reduced by shorting the leads of the motor to generate an inductive braking effect on the motor or by applying an opposite polarity to the leads to actively brake the motor. These techniques provide a crisper, more noticeable transient between the on and off states of a vibrating alert device.

Although concepts have been presented in relation to specific embodiments, it should be appreciated, that the concepts may be applicable over a number embodiments not specifically described herein but falling within the scope of the present disclosure. Accordingly, embodiments disclosed herein are not to be construed as limiting.

I claim:

1. A method of adjusting user alerts in an electronic device, the method comprising:

initiating operation of a haptic device by overdriving a control signal provided to the haptic device to reduce a spin-up time of a motor of the haptic device; and

actively braking the motor of the haptic device to stop operation of the haptic device.

2. The method of claim 1, wherein overdriving a control signal comprises increasing a duty cycle of a pulse width modulated signal.

3. The method of claim 1, wherein actively braking the motor comprises shorting leads of the motor to generate an inductive braking effect.

4. The method of claim 1, wherein actively braking the motor comprises applying an opposite polarity to leads of the motor.

5. The method of claim 1, further comprising:

measuring a frequency related to the operation of the haptic device;

comparing the measured frequency with a target frequency; and

modifying the control signal to drive the haptic device to the target frequency.

6. The method of claim 5, wherein the act of measuring the frequency comprises:

isolating a vibration signal of the haptic device;

finding a plurality of peaks in the vibration signal; and

determining a period of the vibration signal from the plurality of peaks.

7. The method of claim 5, wherein the haptic device comprises a vibrating motor.

8. The method of claim 5, wherein the control signal comprises a pulse width modulation signal.

9. An electronic device, comprising:

a processor; and

a memory coupled to the processor, the memory for storing instructions which, when executed by the processor, performs a method for operating a haptic device, the method comprising:

initiating operation of a haptic device by overdriving a control signal provided to the haptic device to reduce a spin-up time of a motor of the haptic device; and

actively braking the motor of the haptic device to stop operation of the haptic device.

10. The electronic device of claim 9, wherein overdriving a control signal comprises increasing a duty cycle of a pulse width modulated signal applied to the haptic device.

11. The electronic device of claim 9, wherein actively braking the motor comprises shorting leads of the motor to generate an inductive braking effect.

12. The electronic device of claim 9, wherein actively braking the motor comprises applying an opposite polarity to leads of the motor.

13. The electronic device of claim 9, further comprising instructions for:

measuring a frequency related to the operation of the haptic device;

comparing the measured frequency with a target frequency; and

modifying the control signal to drive the haptic device to the target frequency.

14. The electronic device of claim 13, wherein the act of measuring the frequency comprises:

isolating a vibration signal of the haptic device;

finding a plurality of peaks in the vibration signal; and

determining a period of the vibration signal from the plurality of peaks.

15. The electronic device of claim 13, wherein the control signal comprises a pulse width modulation signal.

16. The electronic device of claim 9, wherein actively braking the motor comprises underdriving the motor.

17. A non-transitory computer-readable storage medium encoding computer executable instructions which, when executed by a processor, performs a method for operating a haptic device, the method comprising:

initiating operation of the haptic device by overdriving a control signal provided to the haptic device; and

actively braking a motor of the haptic device to stop operation of the haptic device.

18. The computer-readable storage medium of claim 17, wherein overdriving a control signal comprises increasing a duty cycle of a pulse width modulated signal applied to the haptic device.

19. The computer-readable storage medium of claim 17, wherein actively braking the motor comprises shorting leads of the motor to generate an inductive braking effect.

20. The computer-readable storage medium of claim 17, further comprising instructions for:

measuring a frequency related to the operation of the haptic device;

comparing the measured frequency with a target frequency; and

modifying the control signal to drive the haptic device to the target frequency.

* * * * *