US00D678154S

(12) United States Design Patent

Musk et al.

(10) Patent No.: US D678,154 S

(45) Date of Patent: ** Mar. 19, 2013

(54) **VEHICLE DOOR**

(75) Inventors: **Elon Reeve Musk**, Los Angeles, CA (US); **Franz von Holzhausen**, Malibu, CA (US); **Bernard Lee**, Aliso Viejo, CA (US)

(73) Assignee: **Tesla Motors, Inc.**, Palo Alto, CA (US)

(**) Term: **14 Years**

(21) Appl. No.: **29/412,841**

(22) Filed: **Feb. 8, 2012**

(51) **LOC (9) Cl.** **12-16**

(52) **U.S. Cl.** **D12/196**; D12/86; 296/146.9

(58) **Field of Classification Search** D12/82, D12/83, 85, 86, 88, 89, 90, 91, 93, 94, 196; D21/424, 433, 434; 296/146.2, 146.5, 146.9, 296/181.1, 181.5

See application file for complete search history.

(56) **References Cited**

U.S. PATENT DOCUMENTS

D418,471 S * 1/2000 Gabath D12/196
D432,051 S * 10/2000 Lee et al. D12/92
D467,849 S * 12/2002 Murkett D12/196
D491,860 S * 6/2004 Velazco D12/196
D511,129 S * 11/2005 Nagashima D12/196
D525,910 S * 8/2006 Sugiura et al. D12/91
D542,178 S * 5/2007 Moushegian D12/91
D558,112 S * 12/2007 Leclercq D12/196
D573,522 S * 7/2008 Sato et al. D12/196
D580,331 S * 11/2008 Gueler et al. D12/196
D583,289 S * 12/2008 Leclercq D12/196
D617,682 S * 6/2010 Frei et al. D12/91
D619,500 S * 7/2010 Hsu et al. D12/91
D620,861 S * 8/2010 Froehlich D12/196
D621,764 S * 8/2010 Huet D12/196
D631,398 S * 1/2011 Oda et al. D12/91
D631,811 S * 2/2011 Schneider D12/196
D633,839 S * 3/2011 Matei et al. D12/196
D634,243 S * 3/2011 Frei et al. D12/91
D642,093 S * 7/2011 Kubo et al. D12/91
D645,388 S * 9/2011 Kumai et al. D12/196
D653,187 S * 1/2012 Tomatsu et al. D12/196
8,104,822 B2 * 1/2012 Kriese et al. 296/138
D654,418 S * 2/2012 Hakamata et al. D12/196
D654,419 S * 2/2012 Tomatsu et al. D12/196
D657,295 S * 4/2012 Fetherston et al. D12/196
8,210,600 B1 * 7/2012 Verhee et al. 296/180.1
D671,471 S * 11/2012 Yamada et al. D12/196

* cited by examiner

Primary Examiner — Philip S Hyder
Assistant Examiner — John T Applewhite
(74) *Attorney, Agent, or Firm* — Patent Law Office of David G. Beck

(57) **CLAIM**

The ornamental design for a vehicle door, as shown and described.

DESCRIPTION

FIG. **1** is a perspective view of a vehicle door mounted and in a closed position;
FIG. **2** is an alternate perspective view with the vehicle door mounted and in an opened position;
FIG. **3** is a side elevational view thereof;
FIG. **4** is a front elevational view thereof;
FIG. **5** is a rear elevational view thereof; and,
FIG. **6** is a top elevational view thereof.
The dashed broken lines illustrate environmental structure that forms no part of the claimed design. The dot dash broken line illustrates a boundary between the claimed and unclaimed structure.

1 Claim, 6 Drawing Sheets

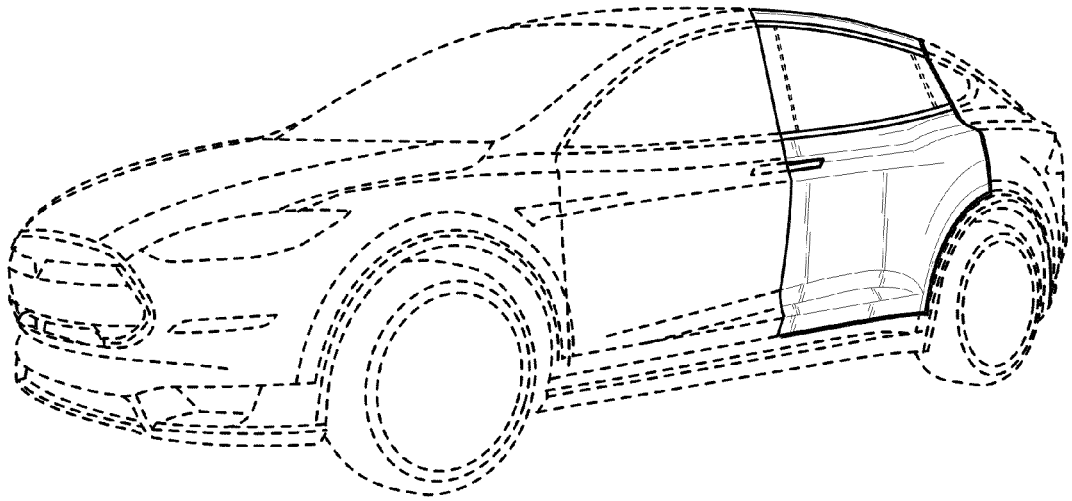

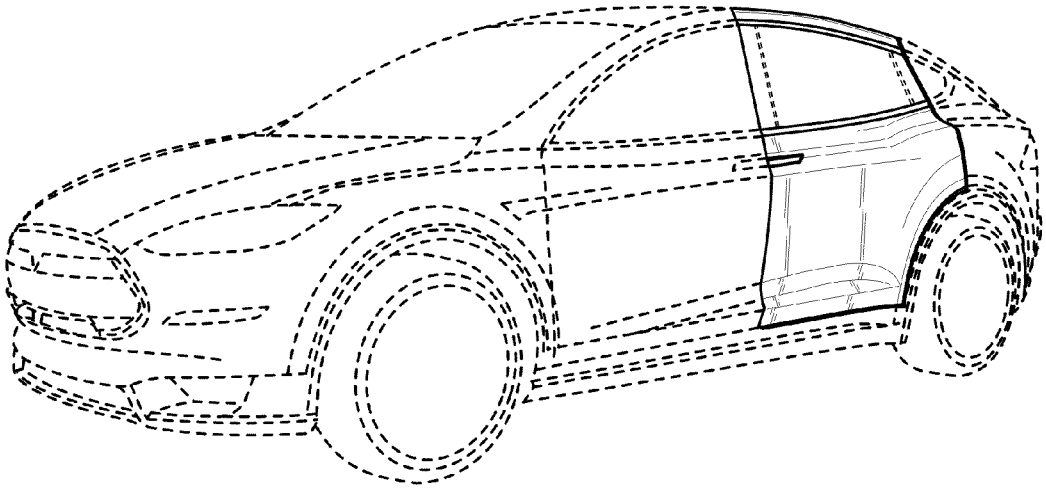

FIG. 1

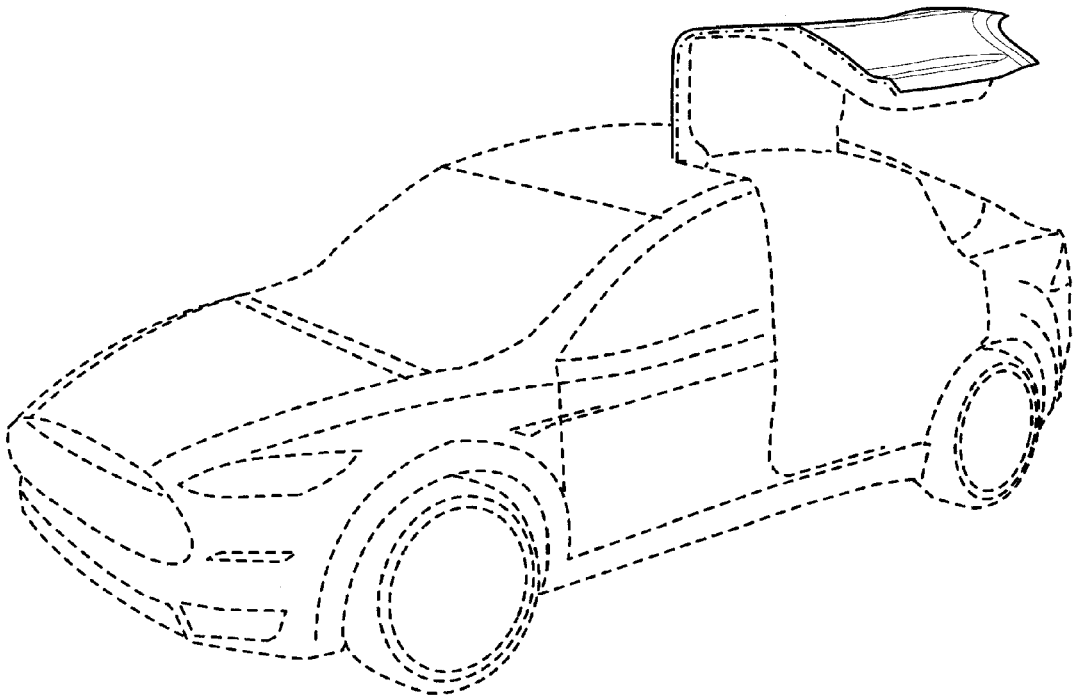

FIG. 2

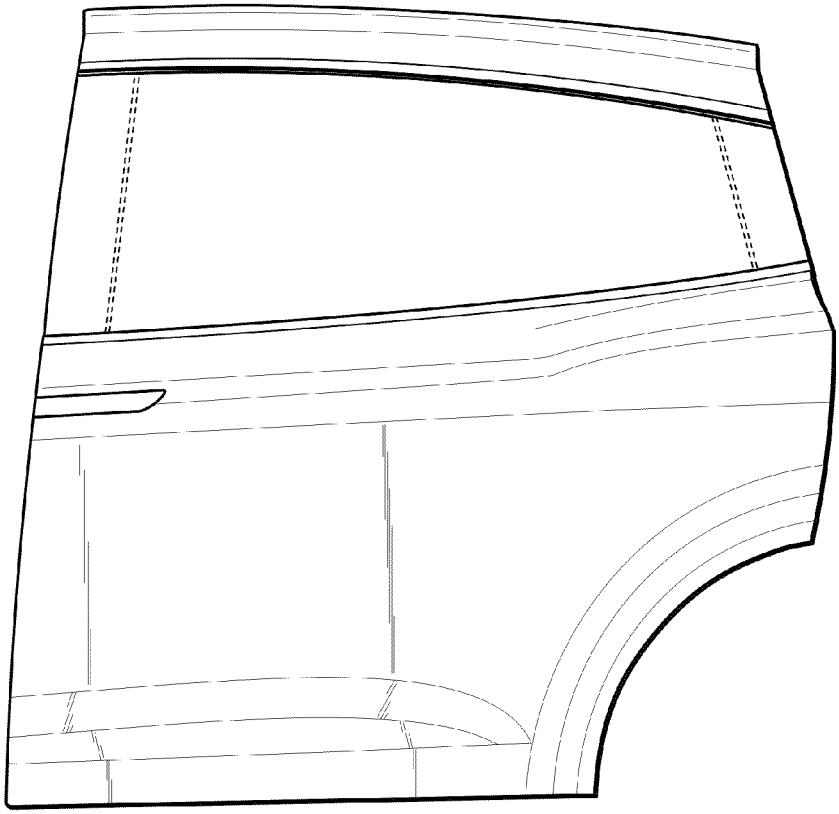

FIG. 3

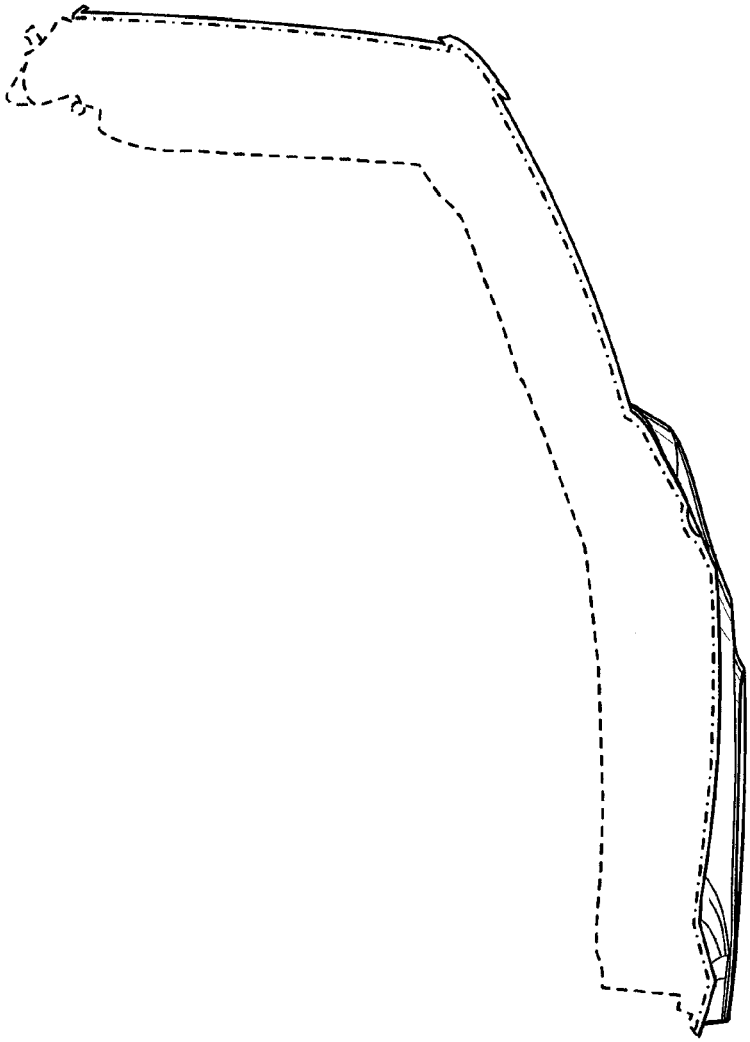

FIG. 4

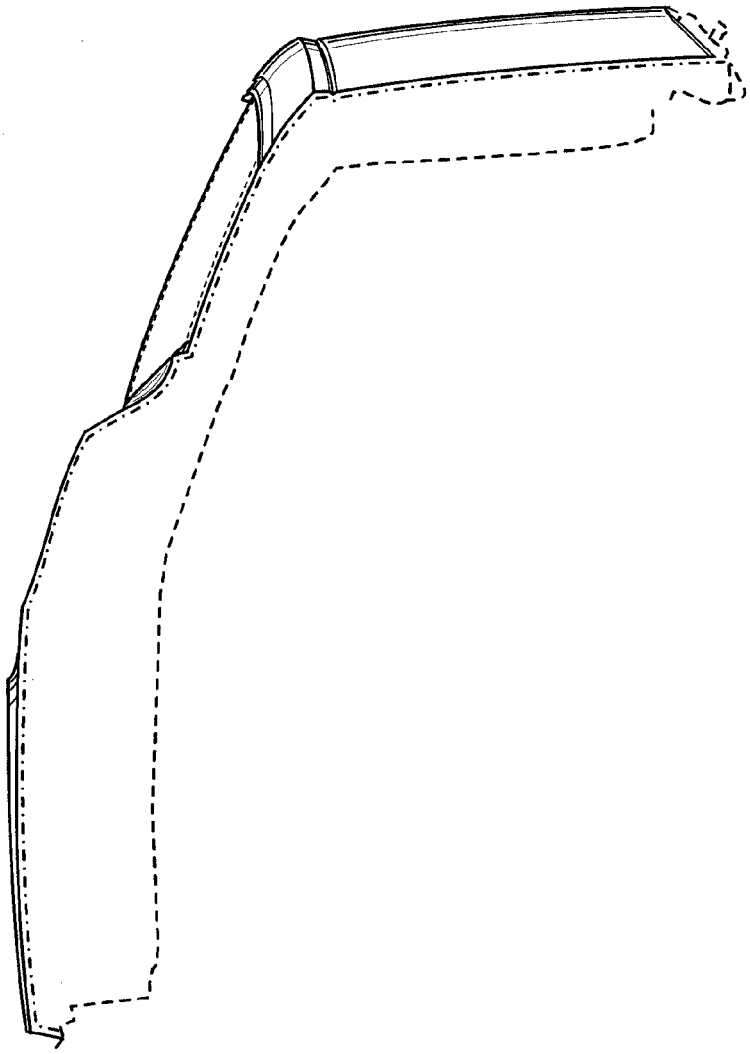

FIG. 5

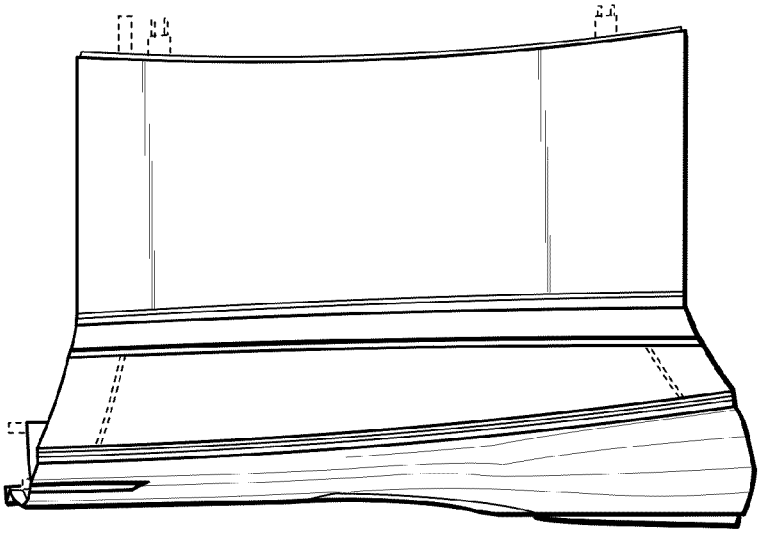

FIG. 6