US009475354B1

(12) **United States Patent**
Hinz

(10) **Patent No.: US 9,475,354 B1**
(45) **Date of Patent: Oct. 25, 2016**

(54) **IFS INCLUDING STRUT PIVOTALLY SECURED TO CHASSIS WITH CLEVIS RING**

(71) Applicant: **Reyco Granning, LLC**, Mount Vernon, MO (US)

(72) Inventor: **John A Hinz**, Monticello, IN (US)

(73) Assignee: **Reyco Granning, LLC**, Mount Vernon, MO (US)

(*) Notice: Subject to any disclaimer, the term of this patent is extended or adjusted under 35 U.S.C. 154(b) by 0 days.

(21) Appl. No.: **14/684,697**

(22) Filed: **Apr. 13, 2015**

(51) **Int. Cl.**

B60G 3/06	(2006.01)
B60G 11/28	(2006.01)
B62D 7/18	(2006.01)
B60G 11/27	(2006.01)
B60G 7/00	(2006.01)

(52) **U.S. Cl.**
CPC ***B60G 3/06*** (2013.01); ***B60G 7/001*** (2013.01); ***B60G 11/27*** (2013.01); ***B60G 11/28*** (2013.01); ***B62D 7/18*** (2013.01); *B60G 2200/142* (2013.01); *B60G 2204/126* (2013.01); *B60G 2204/4106* (2013.01)

(58) **Field of Classification Search**
CPC B60G 3/06; B60G 7/001; B60G 11/28; B60G 11/27; B60G 2204/4106; B60G 2200/142; B60G 2204/126; B62D 7/18
See application file for complete search history.

(56) **References Cited**

U.S. PATENT DOCUMENTS

2,018,653	A		11/1933	Best
2,842,230	A		10/1955	MacPherson
2,757,016	A		7/1956	Adolff et al.
2,856,198	A		10/1958	Muller
2,908,233	A	*	10/1959	Furrer B61F 3/16 105/168
2,916,296	A		12/1959	Muller
2,935,334	A		5/1960	Felts
2,967,066	A		1/1961	Mueller
3,037,787	A		6/1962	Gottschald
3,156,481	A	*	11/1964	Dangauthier B60G 15/12 280/124.106
3,333,653	A	*	8/1967	Eirhart, Jr. B60G 3/01 180/359
3,346,272	A		10/1967	Smith
3,430,977	A		3/1969	Riehl
3,462,168	A		8/1969	Gebler
3,490,785	A		1/1970	Moss
3,560,016	A		2/1971	Bundorf
3,573,880	A		4/1971	Sakai
3,703,215	A		11/1972	Takahashi
3,727,940	A		4/1973	Hug
3,733,087	A		5/1973	Allison
3,926,454	A		12/1975	Van Winsen
3,941,401	A		3/1976	Allison
3,957,128	A		5/1976	Le Salver et al.
4,084,837	A		4/1978	Milner
4,111,456	A		9/1978	Arnold et al.
4,159,125	A	*	6/1979	Buchwald B60G 3/06 180/253

(Continued)

Primary Examiner — Paul N Dickson
Assistant Examiner — Timothy Wilhelm
(74) *Attorney, Agent, or Firm* — George Pappas

(57) **ABSTRACT**

An IFS assembly having a single lower control arm having an inboard end pivotally secured to a chassis support structure, an air spring supported by an air spring seat relative to the lower control arm, a strut having an upper end pivotally secured to the chassis support structure and a lower end coupled to the lower control arm outboard end, and a steering knuckle fixed to the strut lower end, the steering knuckle disposed below the lower air spring seat and whose rotative movement about the strut axis is unconfined by proximity between the steering knuckle and the lower air spring seat, whereby available wheel cut is maximized. Also an IFS module including right and left side IFS assemblies and adapted for installation into a vehicle.

8 Claims, 10 Drawing Sheets

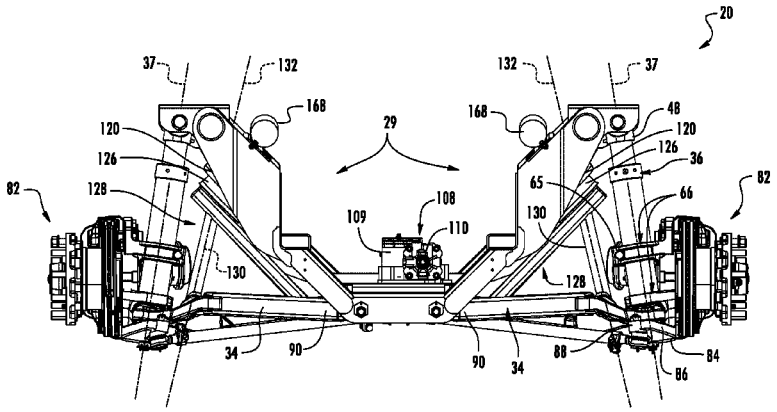

(56) **References Cited**

U.S. PATENT DOCUMENTS

4,206,907	A	6/1980	Harrod	
4,210,343	A	7/1980	Shiomi et al.	
4,213,631	A	7/1980	Wilkerson	
4,260,177	A	4/1981	Pflughaupt et al.	
4,274,654	A	6/1981	Travaglio	
4,286,802	A	9/1981	Roche	
4,321,988	A	3/1982	Bich	
4,341,396	A	7/1982	Decouzon et al.	
4,366,969	A	1/1983	Benya et al.	
4,480,852	A	11/1984	Rumpel	
4,515,391	A	5/1985	Koide	
4,555,096	A	11/1985	Pryor	
4,610,461	A	9/1986	Guzzetta	
4,620,720	A	11/1986	Sakata et al.	
4,648,623	A	3/1987	Cameron	
4,653,772	A	3/1987	Sautter	
4,655,438	A	4/1987	Cameron	
4,662,615	A	5/1987	Paton	
4,712,776	A	12/1987	Geno et al.	
4,763,920	A	8/1988	Huidekoper	
4,778,198	A	10/1988	Gold	
4,826,204	A	5/1989	Cameron	
4,828,232	A	5/1989	Harrod et al.	
4,911,466	A	3/1990	Blair	
4,961,594	A	10/1990	Pees	
4,963,759	A	10/1990	Leonti et al.	
4,966,384	A	10/1990	Endo et al.	
4,974,872	A	12/1990	Riese	
5,009,401	A	4/1991	Weitzenhof	
5,192,100	A	3/1993	Rumpel et al.	
5,228,717	A	7/1993	Perkins	
5,301,932	A	4/1994	Shibaya	
5,451,073	A	9/1995	Inoue	
5,480,129	A *	1/1996	Gilsdorf	B60G 13/003 188/322.12
6,007,345	A *	12/1999	Francis	F16F 9/463 188/282.2
6,305,701	B1	10/2001	Bobinger et al.	
6,382,602	B1	5/2002	Morrow	
6,637,555	B2 *	10/2003	Miller	B60G 13/003 188/266.2
6,676,145	B2	1/2004	Carlstedt et al.	
6,893,033	B2	5/2005	Dean et al.	
7,140,625	B2	11/2006	Dean	
7,185,902	B1	3/2007	Lloyd	
7,226,045	B2 *	6/2007	Brookes	B60G 13/003 188/321.11
7,370,869	B2	5/2008	Kang	
7,384,053	B1	6/2008	Boecker et al.	
7,490,840	B2 *	2/2009	Luttinen	B60G 3/265 280/124.126
8,152,185	B2	4/2012	Siebeneick	
8,430,413	B2 *	4/2013	Kuwabara	B60G 3/20 280/124.155
8,480,107	B2 *	7/2013	Henksmeier	B62D 17/00 280/124.128
2002/0056969	A1	5/2002	Sawai et al.	
2006/0083586	A1 *	4/2006	Fuller	B60G 13/003 403/408.1
2007/0267259	A1 *	11/2007	Furman	B60G 13/003 188/322.16

* cited by examiner

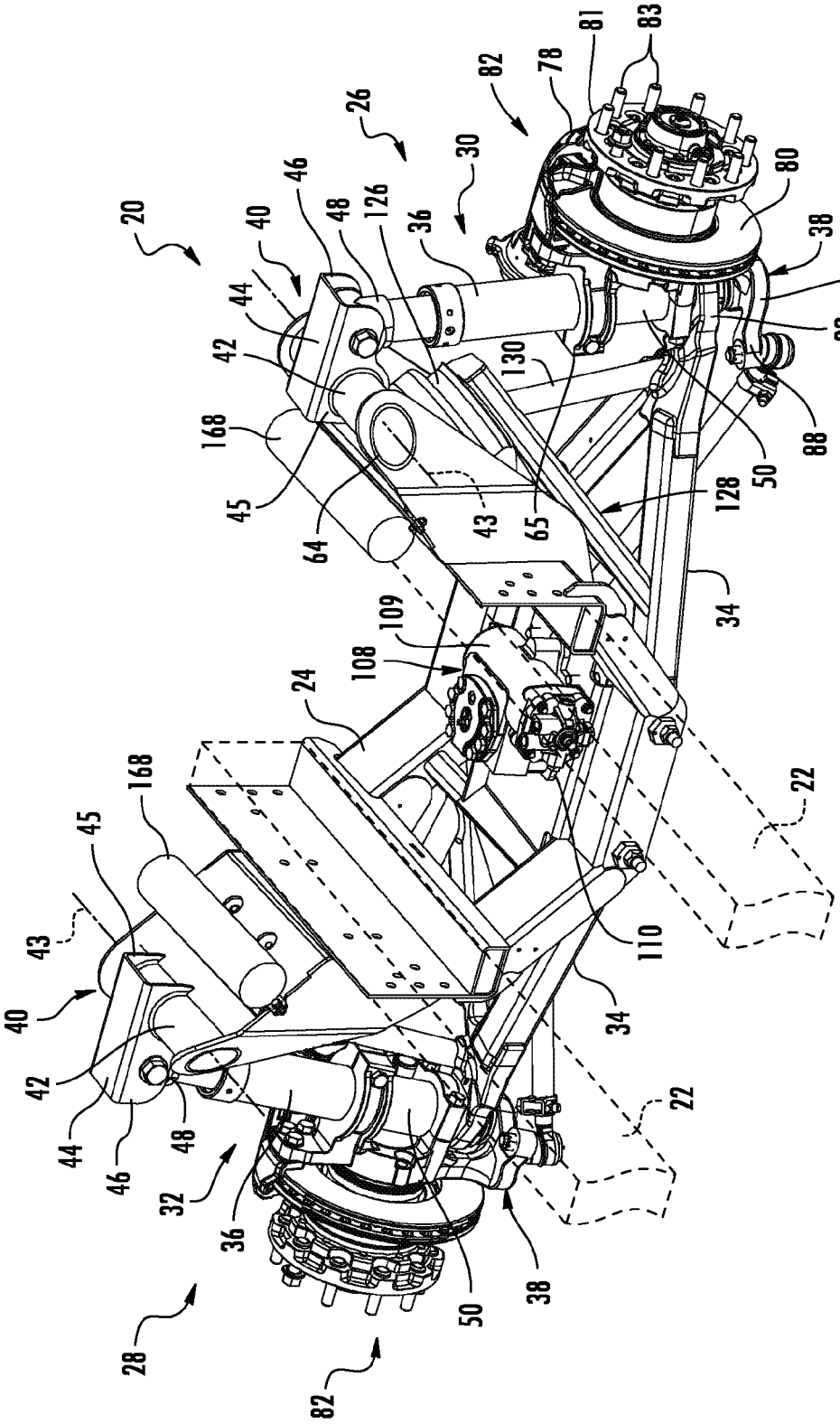
20
40
44
42
168
45
46
48
126
36
26
30
82
78
81
83
80
38
86
92
88
50
128
130
65
43
64
34
109
108
24
22
110
32
28

FIG. 1

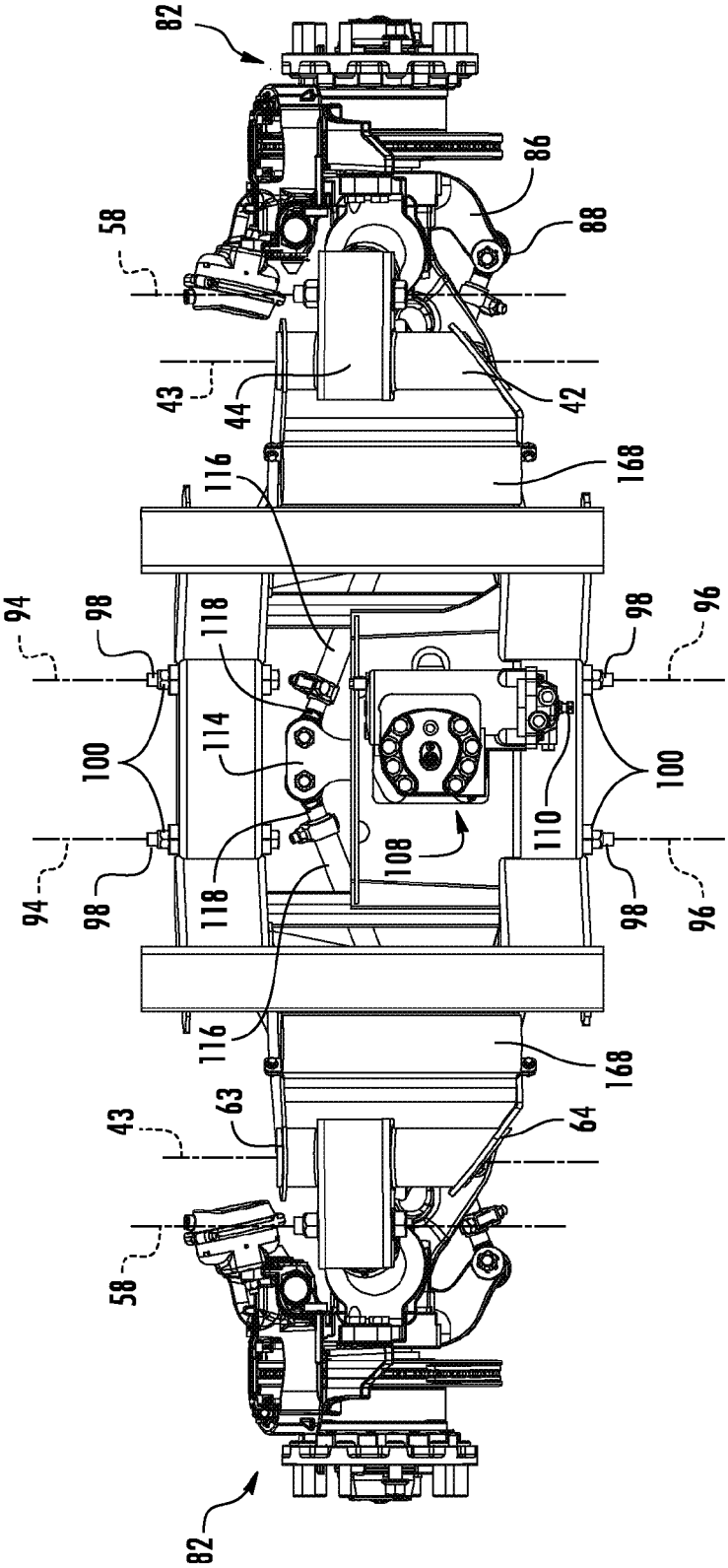

FIG. 2

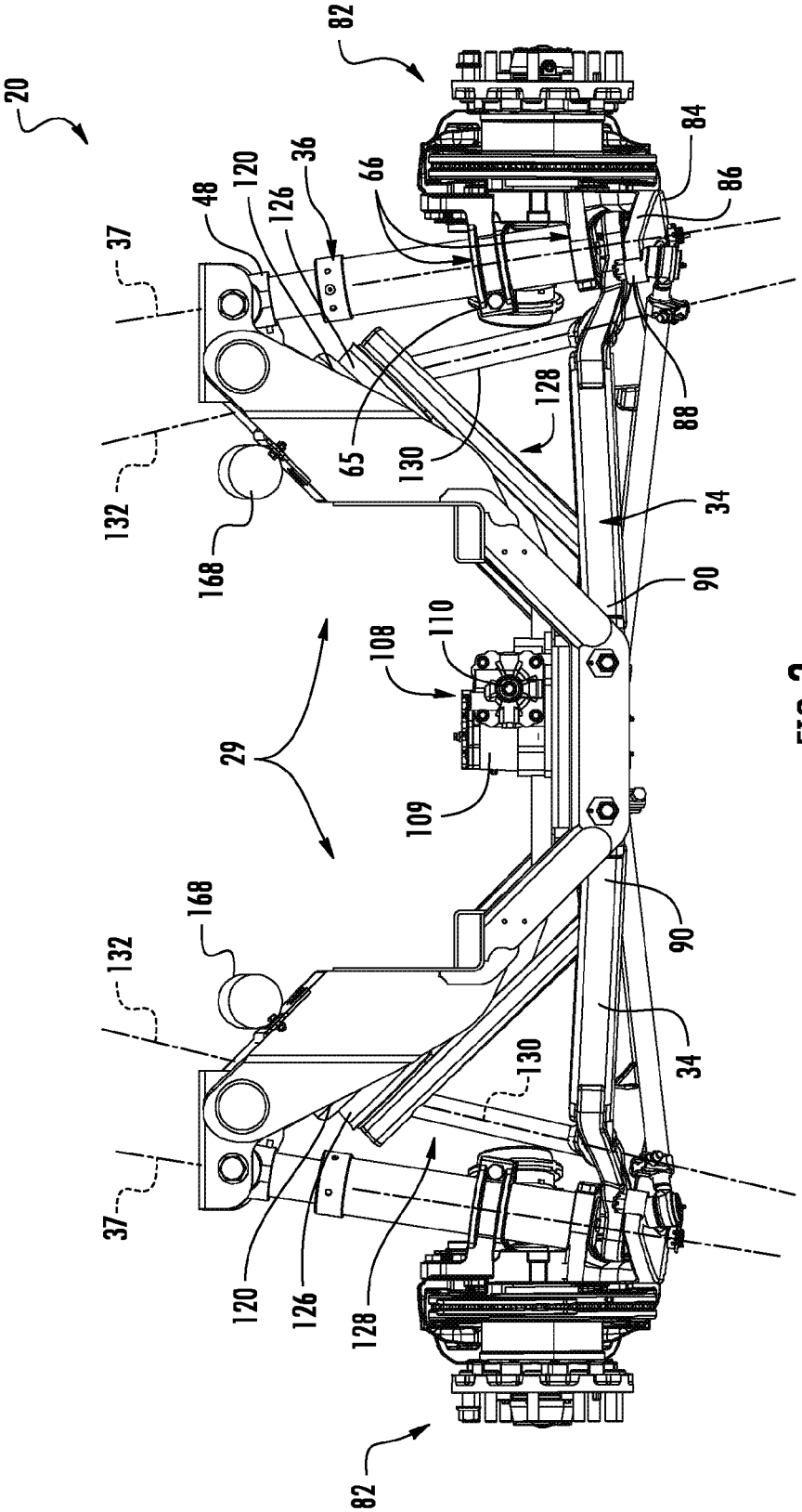
20
82
84
86
36
66
120
126
48
37
128
88
65
130
132
168
34
90
110
108
29
109
168
132
90
130
34
37
120
126
128
82

FIG. 3

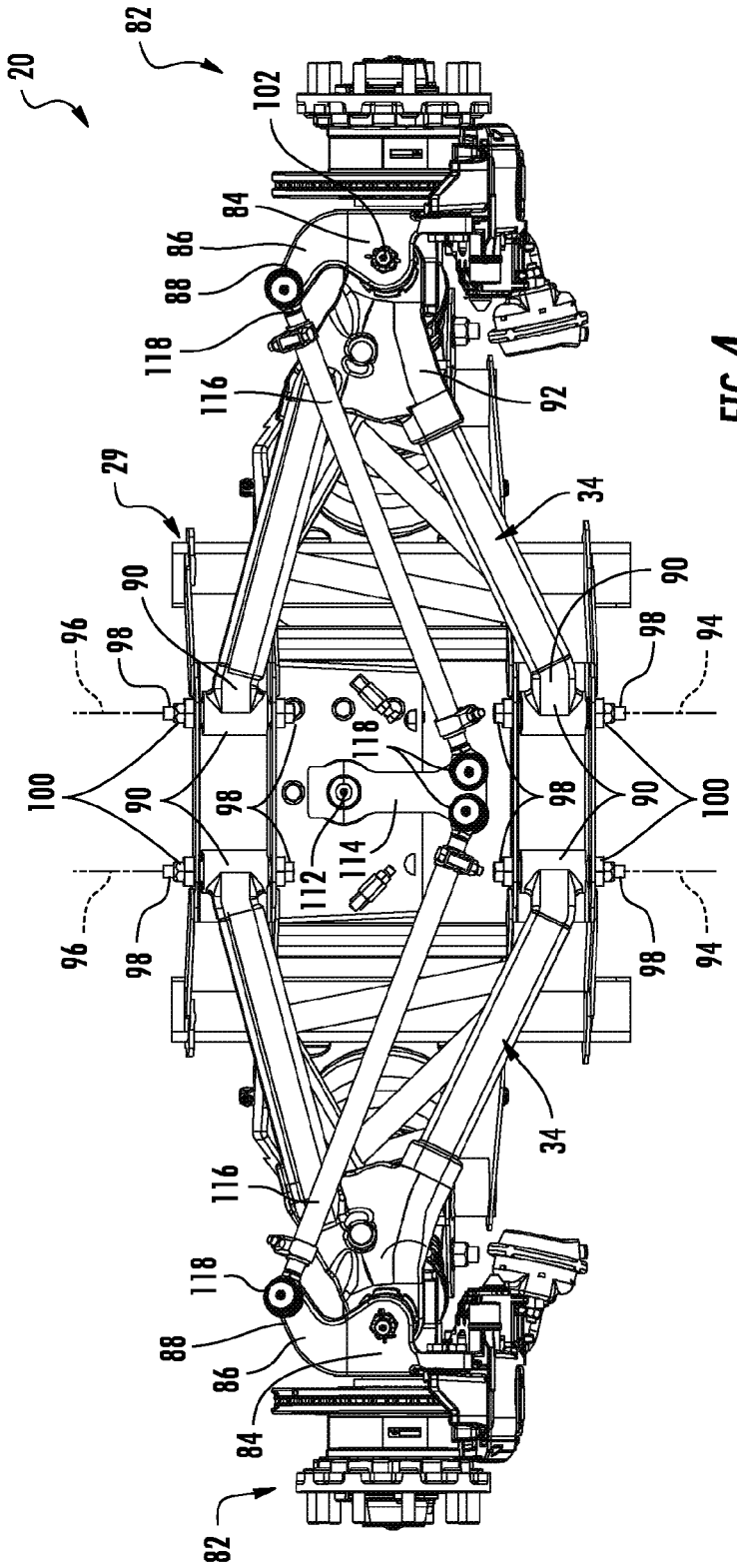

FIG. 4

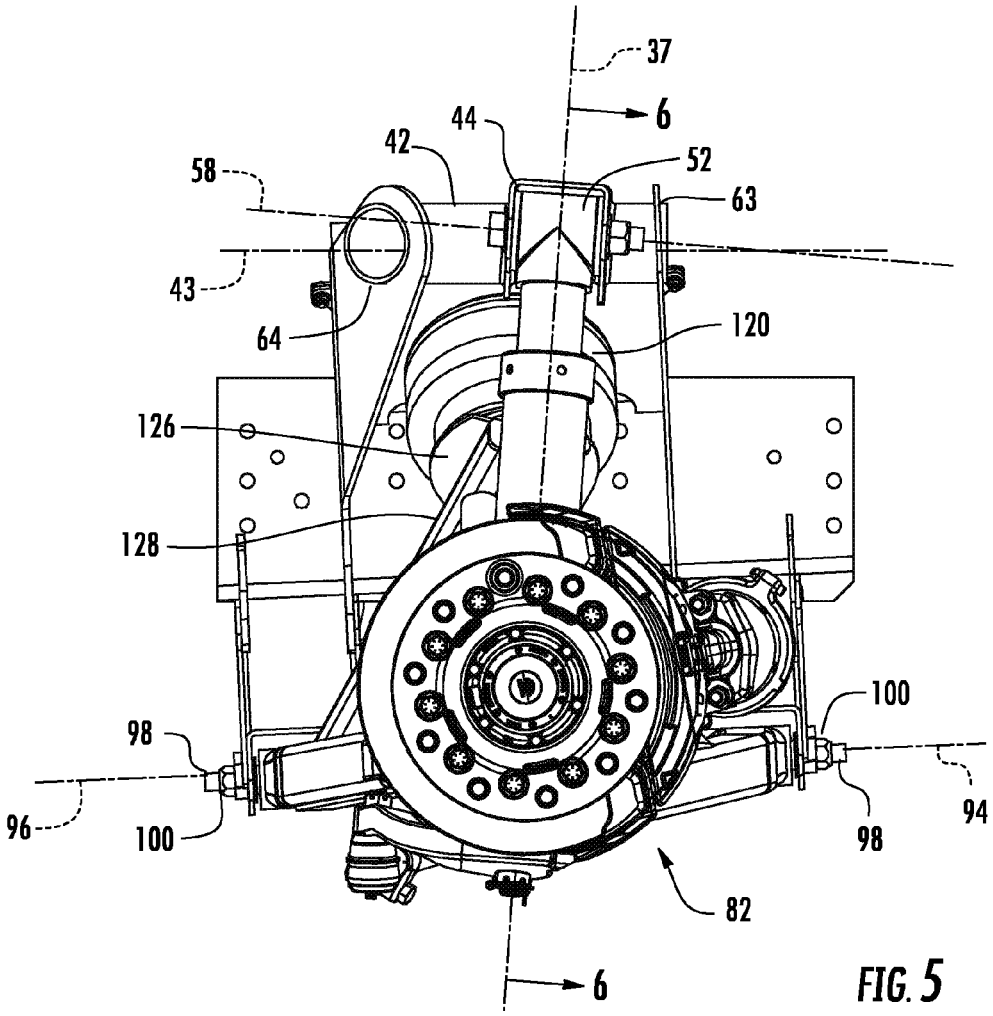

FIG. 5

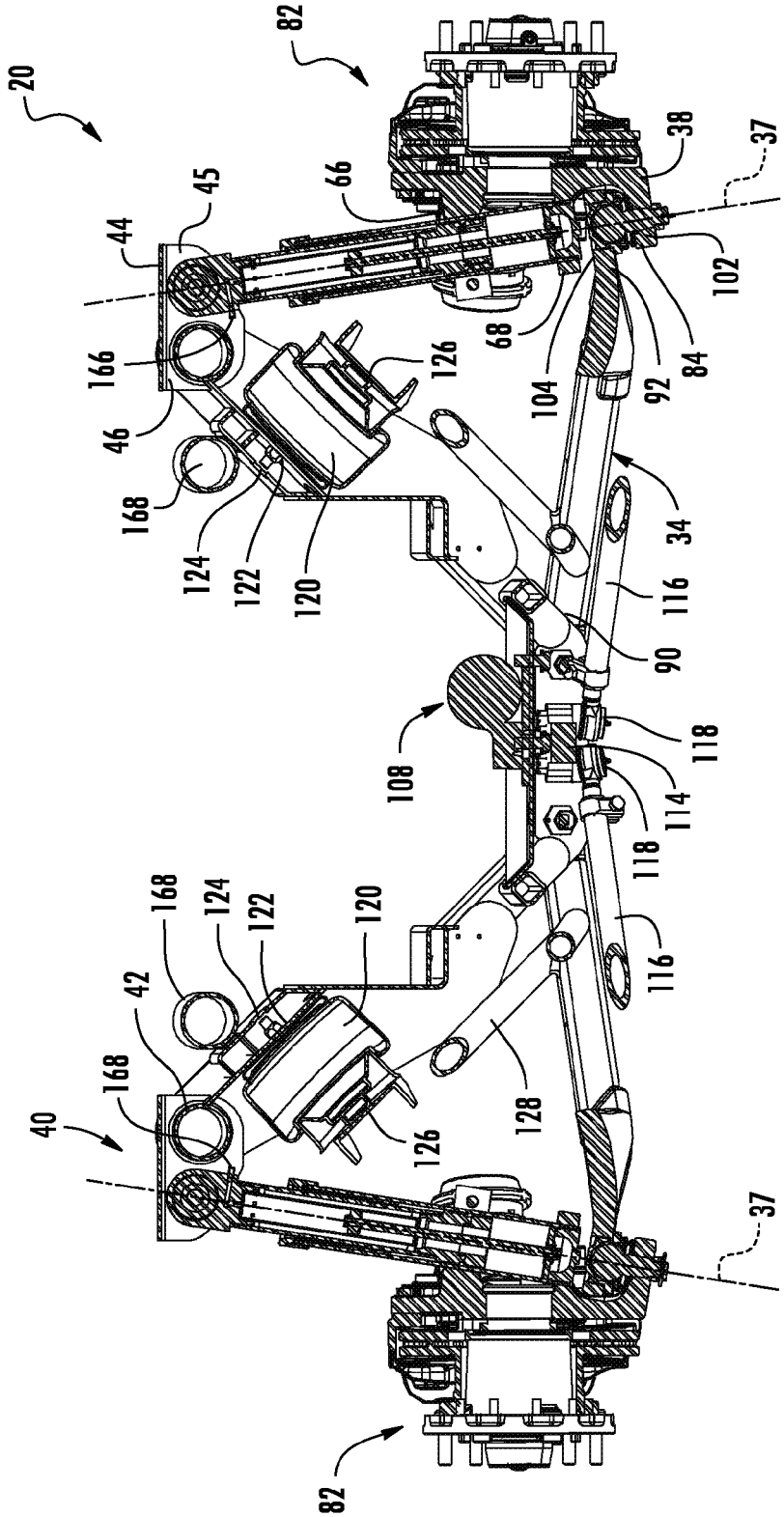
20
82
38
37
66
45
44
102
68
84
92
104
166
126
46
168
124
122
120
34
116
90
108
118
114
118
116
168
124
122
120
42
168
40
126
128
37
82

FIG. 6

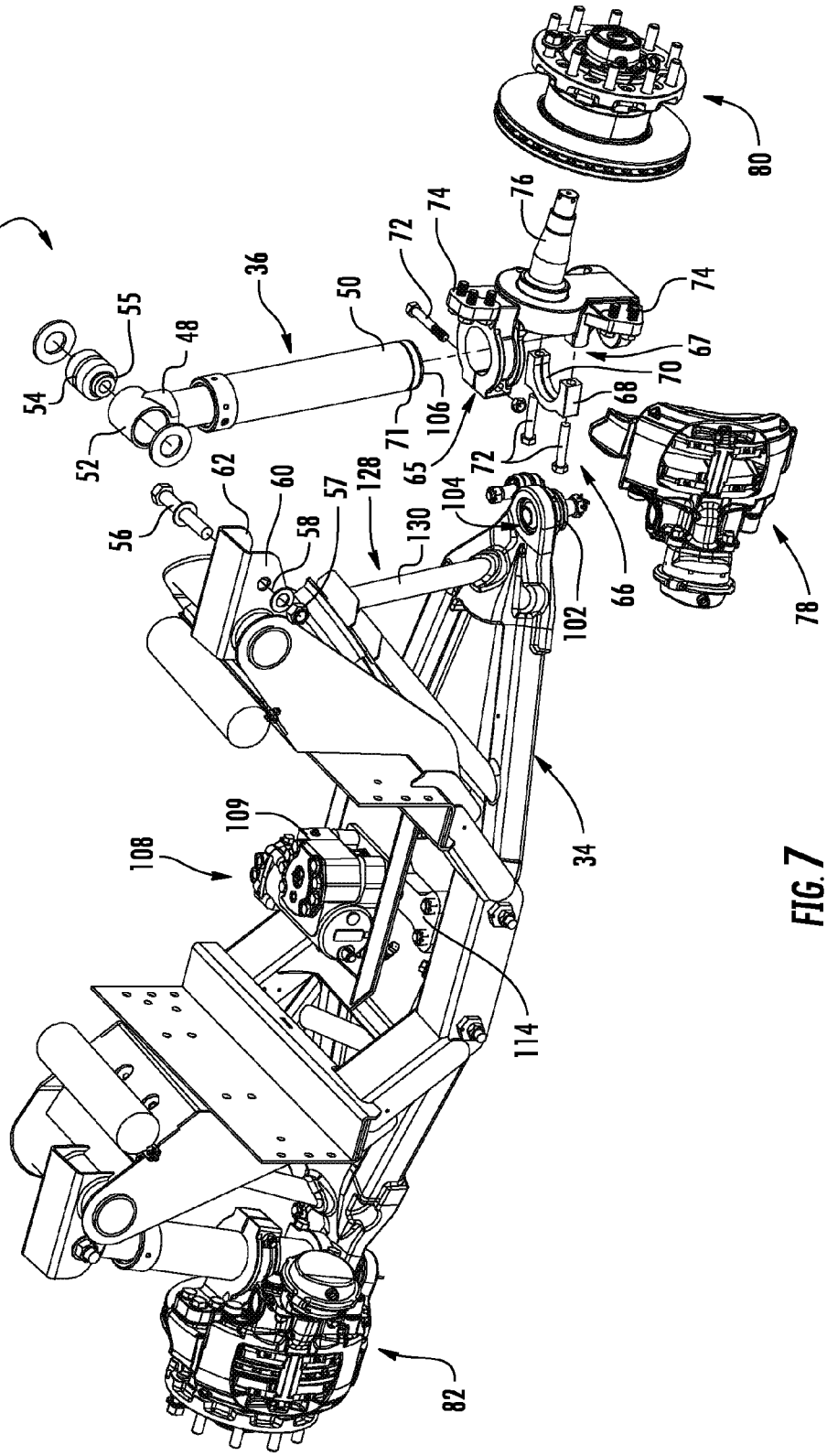
20
36
50
55
48
54
52
71
106
65
72
74
76
74
67
70
68
72
80
66
78
62
60
57
128
130
104
56
58
102
34
109
108
114
82

FIG. 7

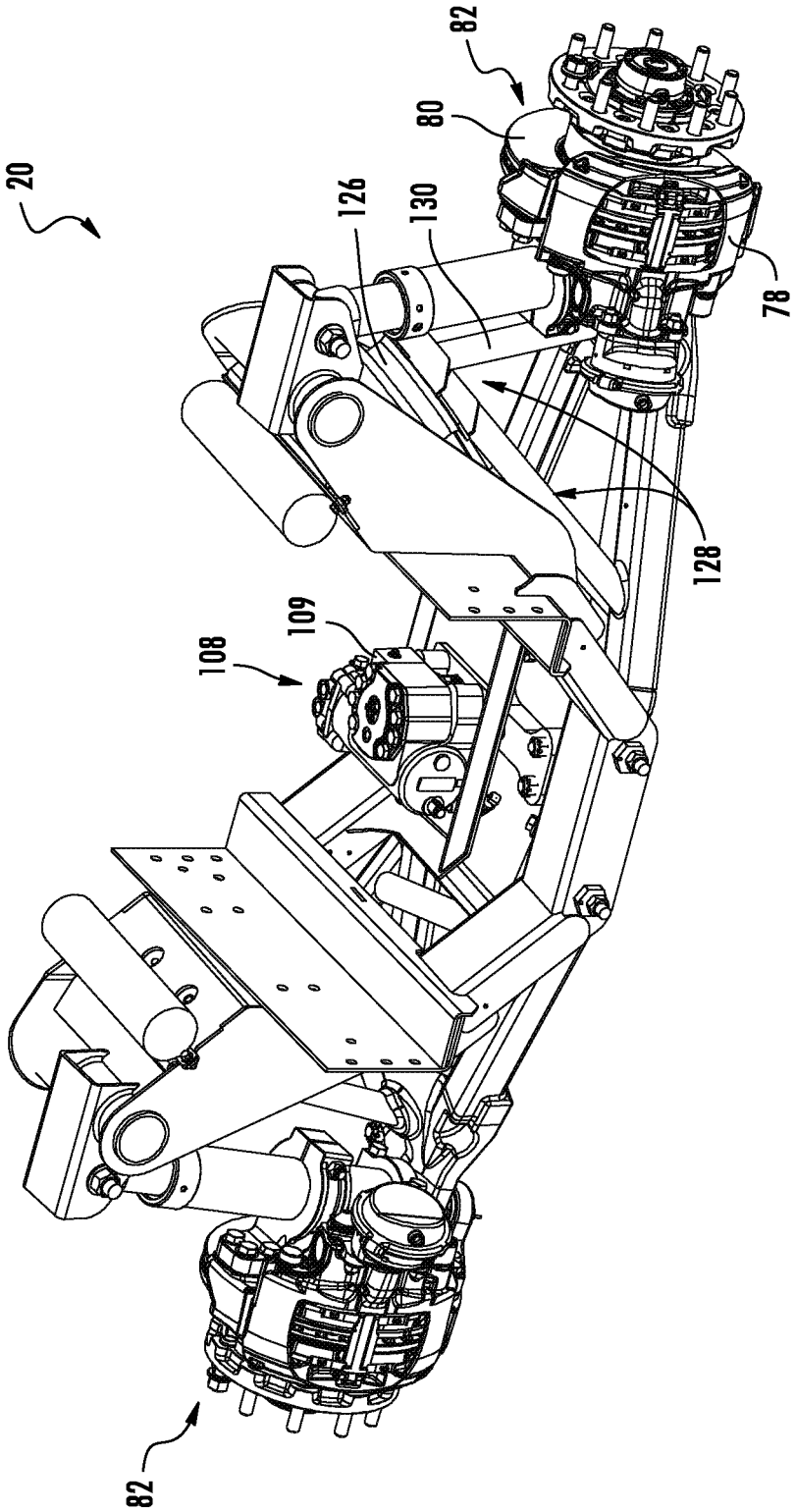

FIG. 8

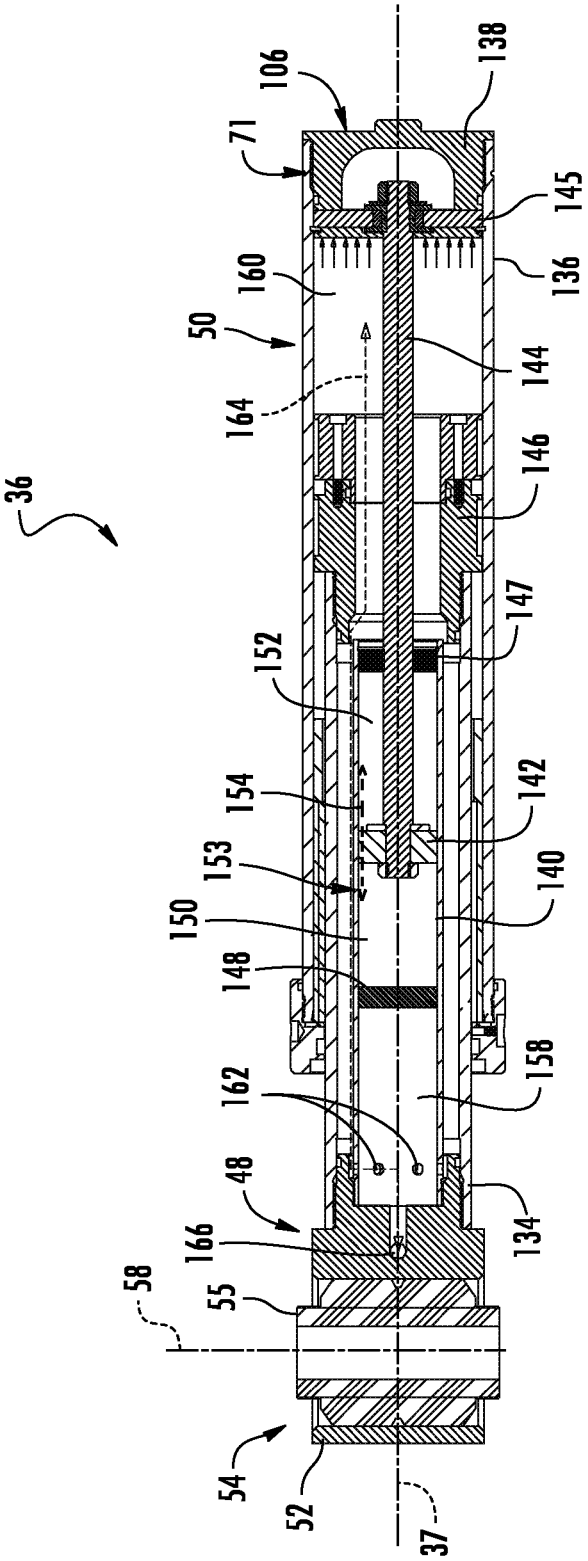
36
106
71
138
145
136
160
50
144
164
146
147
152
154
142
153
140
150
148
158
162
48
134
166
58
55
54
52
37

FIG. 9

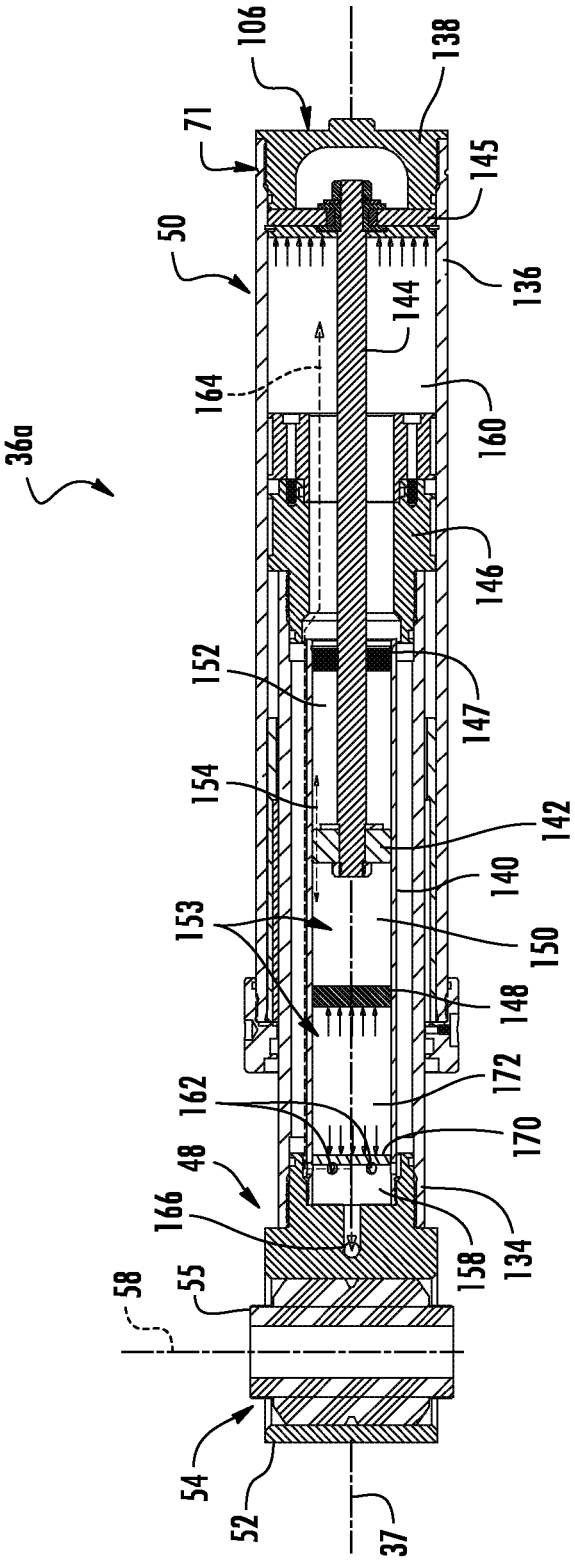
36a
106
71
50
138
145
136
144
164
160
146
152
147
154
142
140
153
150
148
172
162
170
48
166
158
134
58
55
54
52
37

FIG. 10

IFS INCLUDING STRUT PIVOTALLY SECURED TO CHASSIS WITH CLEVIS RING

BACKGROUND

The present disclosure relates to vehicle suspension systems, particularly independent front suspension ("IFS") assemblies.

IFS assemblies employing struts, which are capable of supporting a side load and typically provide damping capabilities, are well known. It is also known to provide an IFS assembly including struts that provide upward support axially therealong, and such suspensions typically employ a single lower control arm. Moreover, it is known to employ air springs with such struts. For example, MacPherson type strut IFS assemblies wherein an air spring is located above and generally in line with the strut are disclosed by U.S. Pat. Nos. 4,206,907; 4,655,438; 4,974,872; and 6,382,602. Of these patents, the '907 and '602 patents also disclose varying the air spring pressure for load and ride height adjustment purposes.

Further examples of MacPherson type strut IFS assemblies in which coil springs and leaf springs are located between a single lower control arm and the vehicle chassis are disclosed by U.S. Pat. Nos. 2,018,653; 2,842,230; 2,967,066; 3,333,653; 3,926,454; and 4,653,772.

It is also known to provide MacPherson type strut IFS assemblies wherein the steering knuckle includes an arm portion extending below and transferring the load to the strut, as disclose, for example, in U.S. Pat. No. 5,192,100.

It is desirable to reduce loading of both struts and air springs in an IFS assembly, to maximize the available wheel cut of an IFS assembly, to simplify vehicle suspension installations by OEM manufacturers, provide variable load-carrying and right height capabilities, and provide other advancements in areas of IFS technologies and configurations.

SUMMARY

The present disclosure beneficially provides such advancements.

According to a first aspect, the present disclosure provides an IFS assembly including a single lower control arm having laterally-spaced inboard and outboard ends, the inboard end adapted to be pivotally secured to a chassis support structure. A lower air spring seat is supported by the lower control arm, the lower air spring seat adapted to upwardly support the chassis support structure relative to the lower control arm through an air spring engaging the chassis support structure. The IFS assembly includes a strut having upper and lower ends disposed along a strut axis, the strut upper and lower ends having relative movement along and about the strut axis. The strut upper end is adapted to be pivotally secured to the chassis support structure and the strut lower end is coupled to the lower control arm outboard end. A steering knuckle is rotatably and axially secured to the strut lower end, the steering knuckle disposed below the lower air spring seat and has rotative movement about the strut axis that is unconfined by proximity between the steering knuckle and the lower air spring seat and/or the air spring through which the lower air spring seat is adapted to support the chassis support structure. Consequently, available wheel cut is maximized.

According to a second aspect, the present disclosure provides an IFS assembly including a chassis support structure and a single lower control arm having laterally-spaced inboard and outboard ends, the inboard end pivotally secured to the chassis support structure. A lower air spring seat is supported by the lower control arm, and an air spring is supported by the lower air spring seat and engages the chassis support structure. The chassis support structure is upwardly supported by the air spring relative to the lower air spring seat. The IFS assembly includes a strut having upper and lower ends disposed along a strut axis, the strut upper and lower ends having relative movement along and about the strut axis. The strut upper end is pivotally secured to the chassis support structure, and the strut lower end is coupled to the lower control arm outboard end. A steering knuckle is rotatably and axially secured to the strut lower end and is disposed below the lower air spring seat. The steering knuckle has rotative movement about the strut axis that is unconfined by proximity between the steering knuckle and the lower air spring seat. Consequently, available wheel cut is maximized.

According to a third aspect, the present disclosure provides an IFS assembly including a single lower control arm defining laterally-spaced inboard and outboard ends, the inboard end adapted to be pivotally secured to a chassis support structure. The IFS assembly includes a strut having upper and lower ends disposed along a strut axis, the strut upper and lower ends having relative movement along and about the strut axis. The strut upper end is adapted to be pivotally secured to the chassis support structure. The IFS assembly includes a steering knuckle including a strut supporting portion affixed to and supporting the strut lower end, and a load arm extending below and secured to the lower control arm. The outboard end of the lower control arm is disposed between the load arm and the strut lower end, and the lower control arm is upwardly supported by the load arm.

According to a fourth aspect, the present disclosure provides an IFS assembly including a chassis support structure and a single lower control arm defining laterally-spaced inboard and outboard ends, the inboard end pivotally secured to the chassis support structure. The IFS assembly includes a strut having upper and lower ends disposed along a strut axis, the strut upper and lower ends having relative movement along and about the strut axis. The strut upper end is pivotally secured to the chassis support structure. The IFS assembly includes a steering knuckle including a strut supporting portion affixed to and supporting the strut lower end, and a load arm extending below and secured to the lower control arm. The outboard end of the lower control arm is disposed between the load arm and the strut lower end, and the lower control arm is upwardly supported by the load arm.

According to a fifth aspect, the present disclosure provides an IFS assembly including a single lower control arm defining laterally-spaced inboard and outboard ends, the inboard end adapted to be pivotally secured to a chassis support structure, and a steering knuckle secured to the lower control arm outboard end. The IFS assembly includes a strut having upper and lower ends disposed along a strut axis, the strut upper and lower ends having relative movement along and about the strut axis. The strut lower end is fixed relative to the steering knuckle, and the strut upper end provided with a clevis ring structure adapted to surround a bushing extending therethrough. The strut upper end is adapted to be pivotally secured to the chassis support structure through the clevis ring structure and the bushing about a generally horizontal first axis.

According to a sixth aspect, the present disclosure provides an IFS assembly including a chassis support structure

and a single lower control arm defining laterally-spaced inboard and outboard ends, the inboard end pivotally secured to the chassis support structure. A steering knuckle is secured to the lower control arm outboard end. The IFS assembly includes a bushing and a strut having upper and lower ends disposed along a strut axis, the strut upper and lower ends having relative movement along and about the strut axis. The strut lower end is fixed relative to the steering knuckle, and the strut upper end provided with a clevis ring structure. The bushing extends through and is surrounded by the clevis ring structure, and the strut upper end is pivotally secured to the chassis support structure through the clevis ring structure and the bushing about a generally horizontal first axis.

According to a seventh aspect, the present disclosure provides an IFS assembly including a single lower control arm having laterally-spaced inboard and outboard ends, the inboard end adapted to be pivotally secured to a chassis support structure, and a steering knuckle secured to the lower control arm outboard end. The IFS assembly includes a strut having upper and lower ends disposed along a strut axis, the strut upper and lower ends having relative movement along and about the strut axis. The strut lower end is fixed relative to the steering knuckle. A torque tube assembly includes an elongate torque tube extending between first and second joints at which the torque tube is adapted to be rigidly fixed relative to the chassis support structure, and an upper strut mount having laterally-spaced first and second ends. The first end is rigidly affixed to the torque tube between the first and second joints. The strut upper end is adapted to be pivotally secured to the second end.

According to an eighth aspect, the present disclosure provides an IFS assembly including a chassis support structure having a first portion and a torque tube assembly, and a single lower control arm having laterally-spaced inboard and outboard ends. The inboard end is pivotally secured to the chassis support structure first portion, and a steering knuckle is secured to the lower control arm outboard end. The IFS assembly includes a strut having upper and lower ends disposed along a strut axis, the strut upper and lower ends having relative movement along and about the strut axis. The strut lower end is fixed relative to the steering knuckle. The torque tube assembly includes an elongate torque tube extending between first and second joints at which the torque tube is rigidly fixed relative to the chassis support structure first portion, and an upper strut mount having laterally-spaced first and second ends. The first end is rigidly affixed to the torque tube between the first and second joints, and the strut upper end is pivotally secured to the second end.

According to a ninth aspect, the present disclosure provides an IFS module adapted for installation into a vehicle. The IFS module includes a chassis support structure having laterally opposite right and left sides, and adapted for attachment to the vehicle frame. The IFS module includes a pair of left and right side single lower control arms, each lower control arm defining laterally-spaced inboard and outboard ends, and each inboard end is pivotally secured to the chassis support structure. The IFS module includes a pair of left and right side struts, each strut having upper and lower ends disposed along a respective strut axis, the upper and lower ends of each strut having relative movement along and about the respective strut axis. The strut upper ends are pivotally secured to the chassis support structure. The IFS module also includes a pair of left and right side steering knuckles, each steering knuckle fixed relative to the respective strut lower end and secured to the respective lower control arm outboard end.

BRIEF DESCRIPTION OF THE DRAWINGS

The various objects, features and attendant advantages of the present invention will become fully appreciated as the same becomes better understood when considered in conjunction with the accompanying drawings, wherein like reference characters designate the same, similar or corresponding parts throughout the several views:

FIG. **1** is a rear, upper perspective view of an IFS module incorporating right and left side IFS assemblies according to an embodiment of the present disclosure;

FIG. **2** is a top plan view of the IFS module of FIG. **1**;

FIG. **3** is a rear elevation of the IFS module of FIG. **1**;

FIG. **4** is a bottom plan view of the IFS module of FIG. **1**;

FIG. **5** is right side elevation of the IFS module of FIG. **1**;

FIG. **6** is a partially sectioned view of the IFS module of FIG. **5** along line **6-6**;

FIG. **7** is a partially exploded, front, upper perspective view of the IFS module of FIG. **1**;

FIG. **8** is a front, upper perspective view of the IFS module of FIG. **1**;

FIG. **9** is a longitudinal sectional view of a first embodiment strut used in an IFS assembly according to the present disclosure; and

FIG. **10** is a longitudinal sectional view of a second embodiment strut used in an IFS assembly according to the present disclosure.

DETAILED DESCRIPTION

The invention is adaptable to various modifications and alternative forms, and the specific embodiments thereof shown by way of example in the drawings are herein described in detail. The exemplary embodiments of the present disclosure are chosen and described so that others skilled in the art may appreciate and understand the principles and practices of the present disclosure. It should be understood, however, that the drawings and detailed description are not intended to limit the invention to the particular forms disclosed, but on the contrary, the intention is to cover all modifications, equivalents and alternatives falling within the spirit and scope of the present invention as defined by the appended claims.

FIGS. **1-8** depict an embodiment of IFS module **20** which is a free standing assemblage adapted for installation into a vehicle. IFS module **20** may be affixed to vehicle frame **22** shown in dashed lines in FIG. **1**, for example. IFS module **20** includes chassis support structure **24** having right side **26** and left side **28** sharing substantially rigid chassis support structure first portion **29** to which is attached, or which forms a part of, right side IFS assembly **30** and left side IFS assembly **32**. Alternatively, chassis support structure **24** or first portion **29** thereof may form an integral part of the vehicle to which right and left side IFS assemblies **30**, **32** are installed directly, rather than through an IFS module such as IFS module **20**. Chassis support structure **24** may be a stamped sheet metal and/or metal beam weldment formed of suitably rigid material. Chassis support structure right and left sides **26**, **28** as shown are substantially mirror images of each other. In other words, chassis support structure **24** is substantially symmetrical about its lateral center, which

coincides with the lateral center of the vehicle. Likewise, right and left side IFS assemblies **30**, **32** as shown are substantially mirror images of each other. Unless indicated otherwise, structural and functional descriptions herein which specify neither chassis support structure right or left side **26**, **28**, nor right or left side IFS assembly **30**, **32**, or components thereof, should be construed to relate to the chassis support structure, IFS assembly and components of either side. Moreover, corresponding elements between the right and left sides have a common reference numeral and in the accompanying Figures, the element of only the right or left side element may be indicated.

In the depicted embodiment, each IFS assembly **30**, **32** includes lower control arm **34**, strut **36** which extends generally vertically along its strut axis **37**, steering knuckle **38**, and torque tube assembly **40**. As shown, torque tube assembly **40** is an integrated part of the respective chassis support structure right or left side **26**, **28**, but may be a separate component affixed thereto. Torque tube assembly **40** is formed of an elongate torque tube **42** that extends fore and aft along generally horizontal axis **43**, and laterally extending upper strut mount **44**. Relative to chassis support structure first portion **29**, torque tube **42** is secured at fixed forward joint **63** and aft joint **64** spaced along torque tube axis **43**. Joints **63**, **64** may be welds. Upper strut mount **44** has inboard end **45** affixed, as by welds, to torque tube **42** at a location between joints **63**, **64**, and outboard end **46** which extends laterally outward from inboard end **45** in a generally horizontal plane.

Strut upper end **48** and strut lower end **50** are disposed along strut axis **37**, and have relative movement along and about strut axis **37**. Strut upper end **48** is provided with steel clevis ring structure **52** that surrounds bushing **54**. In the depicted embodiment, bushing **54** is a compliance bushing formed of elastomeric material such as vulcanized rubber surrounding and bonded to cylindrical steel sleeve **55** and/or the interior surface of clevis ring structure **52**. Sleeve **55** is concentric with clevis ring structure **52**, and compliance bushing **54** may be a component part of strut **36**. Strut upper end **48** is pivotally secured to upper strut mount outboard end **46** with bolt **56** and nut **57**. Bolt **56** extends along axis **58** through upper strut mount outboard end **46** and bushing sleeve **55**. In the depicted embodiment, upper strut mount **44** is defined by an inverted U-shaped channel having spaced parallel forward flange **60** and aft flange **62** provided at outboard end **46** with apertures aligned along axis **58**. Upper strut mount **44**, strut upper end **48**, and elongate bolt **56** thus define a clevis joint. The interior of bushing sleeve **55** is closely fitted about bolt **56** to resist rotation of strut upper end **48** with strut lower end **50**, though a degree of compliance is obtained through elastic deformation of compliance bushing **54**, generally in a plane perpendicular to strut axis **37**. Strut upper end **48** also has a nominal position relative to chassis support structure **24** in which the axes of bolt **56**, bushing sleeve **55** and clevis ring structure **52** are coincident with axis **58**, and strut axis **37** is substantially perpendicular to axis **58**. In the nominal position, elastically deformable compliance bushing **54** is substantially undeformed. Deviation from the nominal position is the result of the compliance facilitated by elastic deformation of bushing **54**. Deviation from the nominal position is typically caused by angular displacement of clevis ring structure **52** about strut axis **37** due to frictionally induced torque imparted on strut upper end **48** by strut lower end **50**, at the onset of or during rotative movement of steering knuckle **38** about strut axis **37**. In some embodiments, deviation from the nominal position may also be caused by strut **36** experiencing a bending moment in fore or aft directions generally parallel with axis **58**.

Strut lower end **50** is fixed at two locations along strut axis **37** to strut supporting portion **66** of steering knuckle **38**. Strut supporting portion **66** includes encircling clamp **65** which surrounds strut lower end **50** received therethrough, and boss **67** and mating bracket **68** located below encircling clamp **65**. Each of boss **67** and bracket **68** is configured with a semi-cylindrical inner surface that engages the outer cylindrical surface of strut lower end **50**. The semi-cylindrical inner surfaces of boss **67** and bracket **68** are provided with circumferentially extending, radially inwardly projecting ridges **70** that are received in cooperating circumferential groove **71** (FIGS. **9** and **10**) provided in the cylindrical outer surface of strut lower end **50**. Ridges **70** and groove **71** axially align strut lower end **50** relative to steering knuckle **38** and secure them against relative movement along strut axis **37**. Frictional engagement between the cylindrical outer surface of strut lower end **50** and the interfacing cylindrical surfaces of encircling clamp **65**, and the clamp defined by boss **67** and bracket **68**, rotatably and axially fix strut lower end **50** to steering knuckle strut supporting portion **66**. Bolts **72** hold bracket **68** and boss **67** together against strut lower end **50**; bolt **72** and nut **73** hold encircling clamp **65** tightly closed upon strut lower end **50**.

Certain embodiments of IFS module **20** are provided with components that may be included in IFS assembly **30**, **32** as individually installed in a vehicle, or which may be installed subsequent to installation of the IFS assemblies **30**, **32**. Steering knuckle **38** includes caliper assembly mounts **74** and spindle **76**, to which caliper assembly **78** and rotor **80** of disk brake assembly **82** are respectively attached. Rotor **80** as shown is provided with central wheel mounting flange **81** provided with wheel mounting lugs **83** for attachment of the vehicle wheels (not shown). A portion of rotor **80** is disposed within caliper assembly **78** in a manner well-known to those having ordinary skill in the art, whereby caliper assembly **78** and rotor **80** are operatively engageable. As discussed herein below, IFS assembly **30**, **32** maximizes the available wheel cut, i.e., the angle in either direction about strut axis **37** that a vehicle front wheel can be turned.

As perhaps best seen in FIGS. **4** and **6**, steering knuckle **38** is provided with load arm **84** that extends laterally inwardly and below lower control arm **34**, to which load arm is secured. Steering knuckle **38** also has elongate turning arm **86** which, in the depicted embodiment, extends rearwardly and laterally inwardly from load arm **84** to turning arm terminal end **88**. Lower control arm **34** has laterally-spaced inboard and outboard ends **90**, **92**. Lower control arm inboard end **90** is pivotally secured to chassis support structure first portion **29** at a pair of locations that are spaced fore and aft. These pivotal attachments are about generally horizontal and parallel forward and aft axes **94**, **96** that extend fore and aft, the attachments being made with bolts **98** and nuts **100**, as perhaps best seen in FIG. **4**.

Lower control arm outboard end **92** is rotatably secured to, and is upwardly supported by, steering knuckle load arm **84** through interconnecting ball joint **102**. Steering knuckle **38** thus places a compressive force onto ball joint **102** and lower control arm **34**. Strut axis **97** extends through ball joint **102**. Referring to FIGS. **6** and **7**, lower control arm outboard end **92** has top surface **104** disposed above ball joint **102** and is superposed by strut axial end **106** defined by strut lower end **50**. As noted above, strut lower end **50** is axially supported by steering knuckle strut supporting portion **66**, and so strut axial end **106** is in spaced superposition with top

surface **104**. Thus, lower control arm outboard end **92** is sandwiched between strut **36** and steering knuckle load arm **84** along strut axis **37**.

IFS module **20** includes steering box **108** having housing **109** secured to chassis support structure first portion **29** at a laterally central position between right and left side lower control arm inboard ends **90**. Steering box **108** has rotatable input shaft **110** extending rearwardly from housing **109**, the rearward end of input shaft **110** adapted to be rotatably connected to a steering shaft (not shown). Steering box **108** also has rotatable output shaft **112** downwardly extending through an aperture in chassis support structure first portion **29** at the lateral center of chassis support structure **24**. Rotatable input and output shafts **110**, **112** are operably coupled within housing **109** for corresponding rotation. Pitman arm **114** is rotatably secured to steering box output shaft **112** and converts angular movement of output shaft **112** to linear movement of a pair of elongate right and left side tie rods **116** each individually secured at one end to pitman arm **114** via an interconnecting tie rod end **118**, as perhaps best seen in FIG. **4**. Each tie rod **116** is secured at its opposite end to a turning arm terminal end **88** via an interconnecting tie rod end **118**. Pitman arm **114**, tie rods **116** and tie rod ends **118** thus form steering linkage between steering box **108** and turning arms **86**, through which coordinated rotative movements of right and left side steering knuckles **38** about their respective strut axes **37** is accomplished, these rotative movements induced by rotation steering box input shaft **110** through steering box output shaft **112** and the steering linkage.

IFS module **20** and the IFS assemblies **30**, **32** include a pair of right and left side air springs **120** operably disposed between the respective chassis support structure right or left side **26**, **28** and the respective right or left side lower control arm **34**. Each air spring **120** engages chassis support structure **24** at a respective right or left side location **122** at which the air spring is retained to chassis support structure **24** with threaded fastener **124**. Chassis support structure **24** and air springs **120** are upwardly supported relative to lower control arms **34**, and thus by steering knuckle load arms **84**.

Air spring **120** is supported by lower air spring seat **126**, which is supported by seat support structure **128** of lower control arm **34**. Seat support structure **128** is located laterally between lower control arm inboard and outboard ends **90**, **92**, and projects upwardly relative thereto. Seat support structure **128** includes rigid strut member **130** which extends along longitudinal axis **132** between lower air spring seat **126** and a location on lower control arm **34** proximate its outboard end **92**, as perhaps best seen in FIGS. **1** and **3**. Steering knuckle **38** is disposed below lower air spring seat **126** and air spring **120**, and rigid strut member longitudinal axis **132** diverges from strut axis **37** in an upward direction from lower control arm **34**. Lower air spring seat **126**, air spring **120**, and rigid strut member **130** are thus located well out of the path of rotative movement of steering knuckle **38** and disk brake assembly **82** carried thereby, whereby rotative movement of steering knuckle **38** about strut axis **37** is unconfined by proximity between steering knuckle **38** and lower air spring seat **126** and/or air spring **120** is unconfined by proximity therebetween and available wheel cut is maximized. Moreover, a portion of disk brake assembly **82** carried by steering knuckle **38** is receivable beneath lower air spring seat **126** during rotative movement of steering knuckle **38** about strut axis **37**.

FIG. **9** shows the internal structure and further details of strut **36**, and FIG. **10** shows the internal structure and details of alternative embodiment strut **36***a*, which may be substituted for strut **36**. Except for distinctions between strut **36** and strut **36***a* discussed below and revealed by a comparison between FIGS. **9** and **10**, reference herein and in FIGS. **1-8** to strut **36** shall be understood to apply to and encompass strut **36***a*. Additionally, it is to be understood that the horizontal orientation of struts **36**, **36***a* depicted in FIGS. **9** and **10** is merely to provide a larger view than obtainable by depicting them in a substantially vertical orientation, and does not alter the context used heretofore with respect to descriptors such as "upper" and "lower"; "above" and "below"; "top" and "bottom"; "vertical" and "horizontal"; and the like.

Referring to FIG. **9**, strut upper end **48** is defined by cylindrical strut upper portion **134** and strut lower end **50** is defined by cylindrical strut lower portion **136**. Strut upper and lower portions **134**, **136** are telescopically engaged along strut axis **37**, and respectively form a strut rod and a strut body. Strut lower portion **136** is sealably closed at its free end by end cap **138** that defines above-mentioned strut axial end **106**. Above-mentioned clevis ring structure **52** is sealably fixed to the free end of strut upper portion **134**. Concentrically disposed within strut upper portion **134** is cylindrical damper body **140**, within which is slidably disposed annular damper valve **142**, Damper valve **142** is affixed to one end of elongate damper rod **144** that extends therethrough. The opposite end of damper rod **144** is secured to plate **145** sealably fixed to the interior wall of strut lower portion **136** and relative to end cap **138**. One end of cylindrical damper body **140** is sealably affixed to strut upper end **48**; the opposite end of damper body **140** is affixed to sliding bearing member **146**. The cylindrical space between the superposing cylindrical surfaces of strut upper portion **134** and strut lower portion **136** located above sliding bearing member **146** is vented to atmosphere. Sliding bearing member **146** is slidably disposed within cylindrical lower portion **136**, and surrounds and moves axially along valve rod **144**. Sealably surrounding valve rod **144** at the end of damper body **140** affixed to sliding bearing member **146**, and located below the lower side of damper valve **142** is annular seal **147**. Above the upper side of damper valve **142** is disk-shaped floating piston **148**, slidably sealed to the inner diameter of damper body **140**. First oil chamber **150** is defined between damper valve **142** and floating piston **148**, and second oil chamber **152** is defined between damper valve **142** and annular seal **147**, thereby defining internal monotube damper assembly **153** having controlled oil flow across damper valve **142** between first and second oil chambers **150**, **152** along the path defined by arrow **154**. Damper **153** is thus housed within strut upper and lower portions **134**, **136** and dampens relative motion between strut upper and lower ends **48**, **50** along strut axis **37**.

Also housed within strut upper and lower portions **134**, **146** is gas spring **156**, which may utilize high pressure nitrogen as the working fluid. Gas spring **156** includes first gas chamber **158** located in damper body **140** between clevis ring structure **52** and floating piston **148**, and second gas chamber **160** located in strut lower portion **136** and sliding bearing member **146** annular seal **147** and plate **145**. The pressurized nitrogen gas within gas spring **156** provides the biasing force that urges strut upper and lower ends **48**, **50** apart along strut axis **37**, and thus allows struts **39** to upwardly support chassis support structure **24** relative to steering knuckles **38**. Additionally, the high pressure nitrogen gas within gas spring, which acts on the upper side of floating piston **148**, prevents cavitation in the hydraulic oil of damper **153**. First gas chamber **158** is provided with a circumferentially arranged plurality of orifices **162** through

the cylindrical wall of damper body **140** proximate the axial end thereof. First and second gas chambers are in fluid communication along a path indicated by arrow **164**, which extends through orifices **162**, along the outer cylindrical surface of damper body **140**, and about damper rod **144** within sliding bearing member **146**. Above the axial end of cylindrical damper body **140**, in clevis ring structure **52**, strut upper end **48** is provided with gas port **166** adapted for connection with gas reservoir **168** externally of strut **36**. IFS module **20** includes right and left side gas reservoirs **168** respectively mounted to chassis support structure right and left sides **26**, **28**. Each gas spring **156** is adapted to receive gas from and discharge gas to its connected gas reservoir **168**, and is capable of containing gas at selectively variable pressures so as to compensate for different loads between the strut upper and lower ends **48**, **50** and/or establish different nominal axial distances therebetween, thereby enabling changes to vehicle ride height and providing vehicle kneeling capabilities.

Referring now to FIG. **10**, strut **36***a* is substantially identical to strut **36** except for providing circular wall **170** sealably fixed within cylindrical damper body **140** just below orifices **162**, and sealed, third gas chamber **172** within damper body **140** between wall **170** and floating piston **148**. Third gas chamber **172** provides damper **153** with a sealed nitrogen charge which bears on the upper side of floating piston **148**.

Forces imparted by the pressurized nitrogen in gas spring **156** urge strut upper and lower ends **48**, **50** apart, and struts **36**, **36***a* therefore upwardly support chassis support structure **24**. Struts **36**, **36***a* act in parallel with air springs **120** to upwardly support chassis support structure **24** and other portions of a vehicle's sprung weight relative to different portions of steering knuckles **38**. Air springs **120** may thus be smaller than prior air springs operably disposed in series connection with struts or other springs, and positioned so as not to constrain rotative movement of the steering knuckles, maximizing available wheel cut.

While exemplary embodiments have been disclosed hereinabove, the present invention is not limited thereto. Instead, this application is intended to cover any variations, uses, or adaptations of the present disclosure using its general principles.

What is claimed is:

1. An IFS assembly comprising:

a chassis support structure;

a single lower control arm defining laterally-spaced inboard and outboard ends, the inboard end pivotally secured to the chassis support structure;

a steering knuckle secured to the lower control arm outboard end;

a bushing;

a strut having upper and lower ends disposed along a strut axis, the strut upper and lower ends having relative movement along and about the strut axis, the strut lower end fixed relative to the steering knuckle, the strut upper end provided with a clevis ring structure, the bushing extending through and surrounded by the clevis ring structure, the strut upper end pivotally secured to the chassis support structure through the clevis ring structure and the bushing about a generally horizontal first axis; and,

wherein the chassis support structure comprises a torque tube assembly including an elongate torque tube fixed at longitudinally spaced first and second locations along the torque tube and an upper strut mount having laterally-spaced inboard and outboard ends, the upper strut mount inboard end affixed to the torque tube between the first and second locations, the strut upper end pivotally secured to the upper strut mount outboard end.

2. The IFS assembly of claim **1**, wherein the chassis support structure comprises a pair of horizontally spaced flanges between which the clevis ring structure is disposed and to which the strut upper end is pivotally secured.

3. The IFS assembly of claim **2**, wherein the strut upper end has a nominal position relative to the chassis support structure in which the strut axis is substantially perpendicular to the first axis.

4. The IFS assembly of claim **3**, wherein the bushing is an elastically deformable compliance bushing, and deviation from the nominal position is facilitated by elastic deformation of the compliance bushing.

5. The IFS assembly of claim **2**, wherein the opening defined by the clevis ring structure is substantially aligned with a pair of apertures in the chassis support structure flanges along the first axis.

6. The IFS assembly of claim **1**, wherein the strut upper end comprises the bushing surrounded by the clevis ring structure.

7. The IFS assembly of claim **1**, further comprising a bolt extending through the bushing and about which the strut upper end is pivotally secured to the chassis support structure.

8. The IFS assembly of claim **1**, wherein the upper strut mount comprises a pair of horizontally spaced flanges between which the clevis ring structure is disposed and to which the strut upper end is pivotally secured.

* * * * *