US009404454B2

(12) **United States Patent**
Achor

(10) **Patent No.: US 9,404,454 B2**
(45) **Date of Patent: Aug. 2, 2016**

(54) **FUEL LEVEL SENSOR FOR MARINE FUEL VAPOR SEPARATOR EXTERNAL TO UNIT**

(75) Inventor: **Kyle Achor**, Monticello, IN (US)

(73) Assignee: **Carter Fuel Systems LLC**, Cleveland, OH (US)

(*) Notice: Subject to any disclaimer, the term of this patent is extended or adjusted under 35 U.S.C. 154(b) by 179 days.

(21) Appl. No.: **13/354,373**

(22) Filed: **Jan. 20, 2012**

(65) **Prior Publication Data**

US 2012/0186562 A1 Jul. 26, 2012

Related U.S. Application Data

(60) Provisional application No. 61/434,461, filed on Jan. 20, 2011.

(51) **Int. Cl.**

G01F 23/30	(2006.01)
F02M 37/20	(2006.01)
F02B 61/04	(2006.01)
F02M 37/00	(2006.01)

(52) **U.S. Cl.**

CPC ***F02M 37/20*** (2013.01); ***G01F 23/30*** (2013.01); *F02B 61/045* (2013.01); *F02M 37/0052* (2013.01)

(58) **Field of Classification Search**

CPC F02M 25/08; F02M 37/22; G01F 23/72; G01F 23/74; G01F 23/30; G01F 23/64; G01F 23/76; G01F 25/0061; G01F 25/0069

USPC ..... 123/509, 518, 514, 520, 516; 73/290 R, 73/313–314

See application file for complete search history.

(56) **References Cited**

U.S. PATENT DOCUMENTS

1,838,135	A	*	12/1931	Derby	G01F 23/64 200/225
3,586,015	A	*	6/1971	Kitzner	137/39
4,056,979	A	*	11/1977	Bongort	G01F 23/74 200/84 C
4,091,250	A	*	5/1978	Siiberg	H01H 36/02 200/84 C

(Continued)

FOREIGN PATENT DOCUMENTS

JP	9-184749	7/1997
JP	2009-515076 A	4/2009
WO	03074863 A1	9/2003

OTHER PUBLICATIONS

International Search report PCT/US2012/021941 mailed on May 18, 2012.

(Continued)

Primary Examiner — Hung Q Nguyen
Assistant Examiner — Josh Campbell
(74) *Attorney, Agent, or Firm* — Jones Day

(57) **ABSTRACT**

A fuel vapor separator assembly including a housing having an open interior and a float disposed therein. At least one magnet is disposed on the float, and a sensor assembly which is responsive to magnetic fields is disposed externally of the housing. The sensor assembly senses the position of the float to determine whether vapor is present in the fuel vapor separator. If the sensor assembly determines that vapor is present in the fuel vapor separator, then it generates a signal, which a controller receives and activates a vapor vent valve to discharge the vapor and/or activates a fuel lift pump to pump additional fuel into the fuel vapor separator. The sensor assembly could be, for example, a Hall effect sensor or a reed-type sensor.

10 Claims, 8 Drawing Sheets

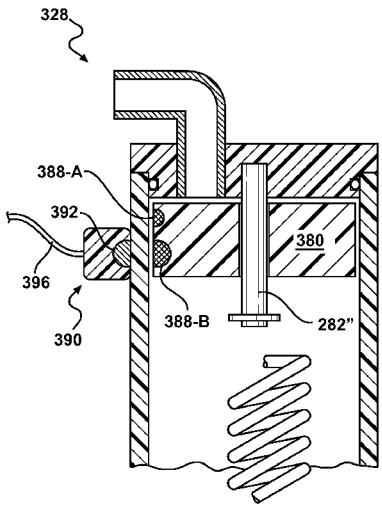

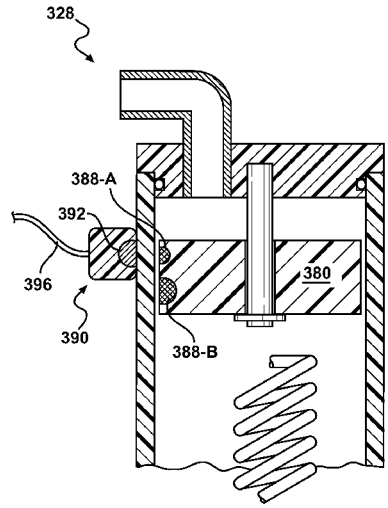

(56) **References Cited**

U.S. PATENT DOCUMENTS

4,253,332	A	3/1981	Sabatino et al.	
4,602,605	A *	7/1986	Adkins	123/516
4,649,898	A *	3/1987	Martinson	A23L 3/10 126/348
4,804,944	A *	2/1989	Golladay et al.	340/624
5,115,784	A *	5/1992	Mito	F02B 61/045 123/514
5,586,466	A *	12/1996	Steiner	G01F 23/30 73/311
5,653,103	A *	8/1997	Katoh	60/283
5,666,819	A *	9/1997	Rockenfeller et al.	62/480
6,158,972	A	12/2000	Ruth	
6,390,871	B1 *	5/2002	Wickman et al.	440/88 R
6,553,974	B1 *	4/2003	Wickman et al.	123/516
7,112,110	B1 *	9/2006	Kollmann	F02M 37/20 440/88 F
7,431,021	B1	10/2008	Achor	
7,503,314	B2	3/2009	Achor	
7,617,725	B2 *	11/2009	Howayshell	73/322
7,640,916	B2 *	1/2010	Ulrey et al.	123/446
2001/0039944	A1 *	11/2001	Braun et al.	123/510
2006/0048757	A1 *	3/2006	Harvey	F02M 37/0047 123/516
2006/0107932	A1	5/2006	Shibata et al.	
2006/0288777	A1 *	12/2006	Lazaris	A47J 31/4457 73/313
2007/0079815	A1 *	4/2007	Shinkarenko et al.	123/525
2008/0121217	A1 *	5/2008	Guterres	F02M 37/0017 123/516
2009/0071448	A1 *	3/2009	Smith	F02M 37/20 123/516
2009/0293843	A1	12/2009	Kato et al.	
2010/0018498	A1 *	1/2010	Hirose	123/337

OTHER PUBLICATIONS

Office Action dated Nov. 6, 2015, from Corresponding Chinese Patent Application No. 201280005974.8, and English translation of same.

Office Action dated Jan. 19, 2016, from Corresponding Japanese Patent Application No. 2013-550594, and English translation of same.

Office Action dated Jun. 2, 2016, from Corresponding EPO Patent Application No. 127021103-1606.

* cited by examiner

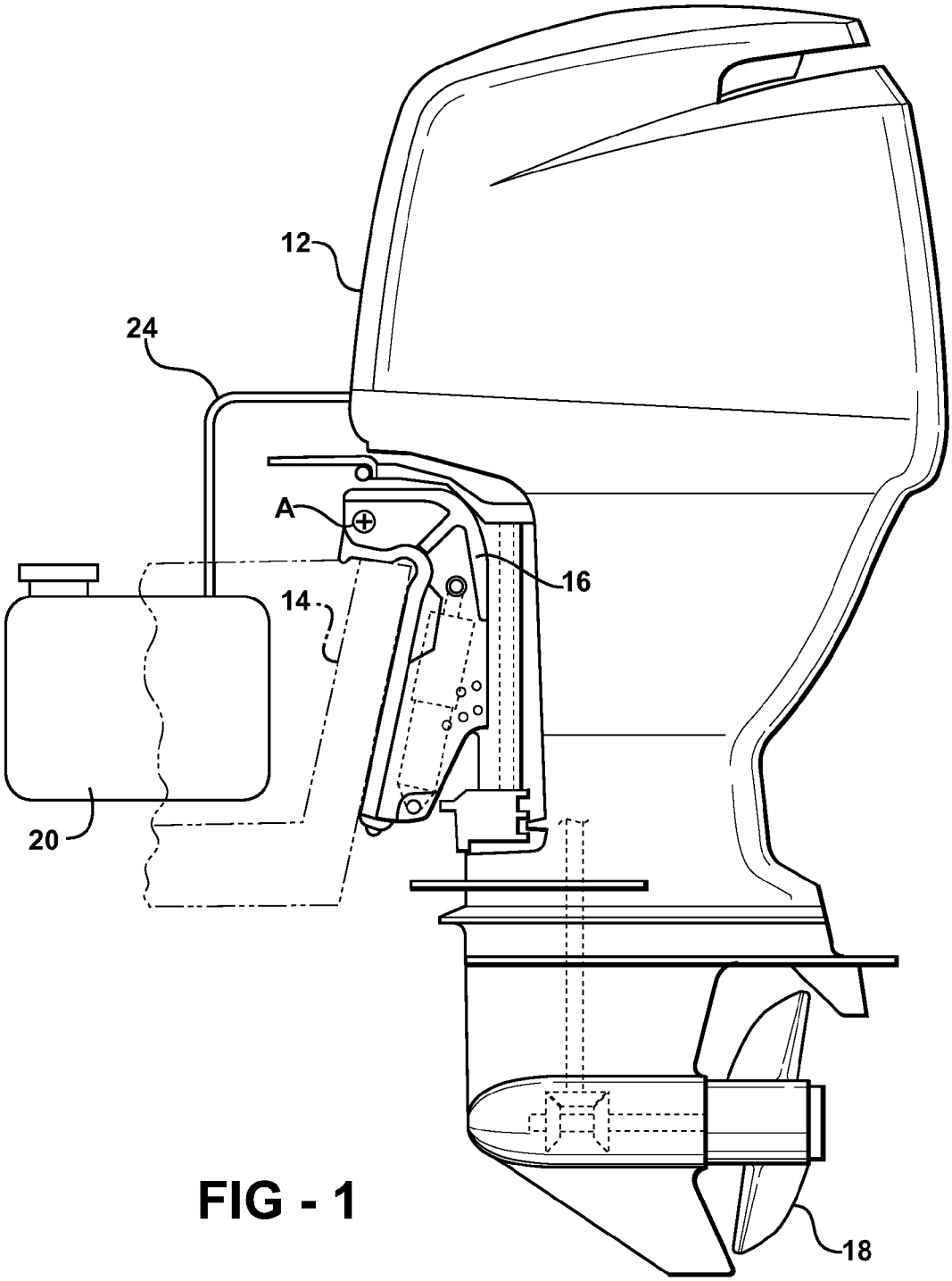

FIG - 1

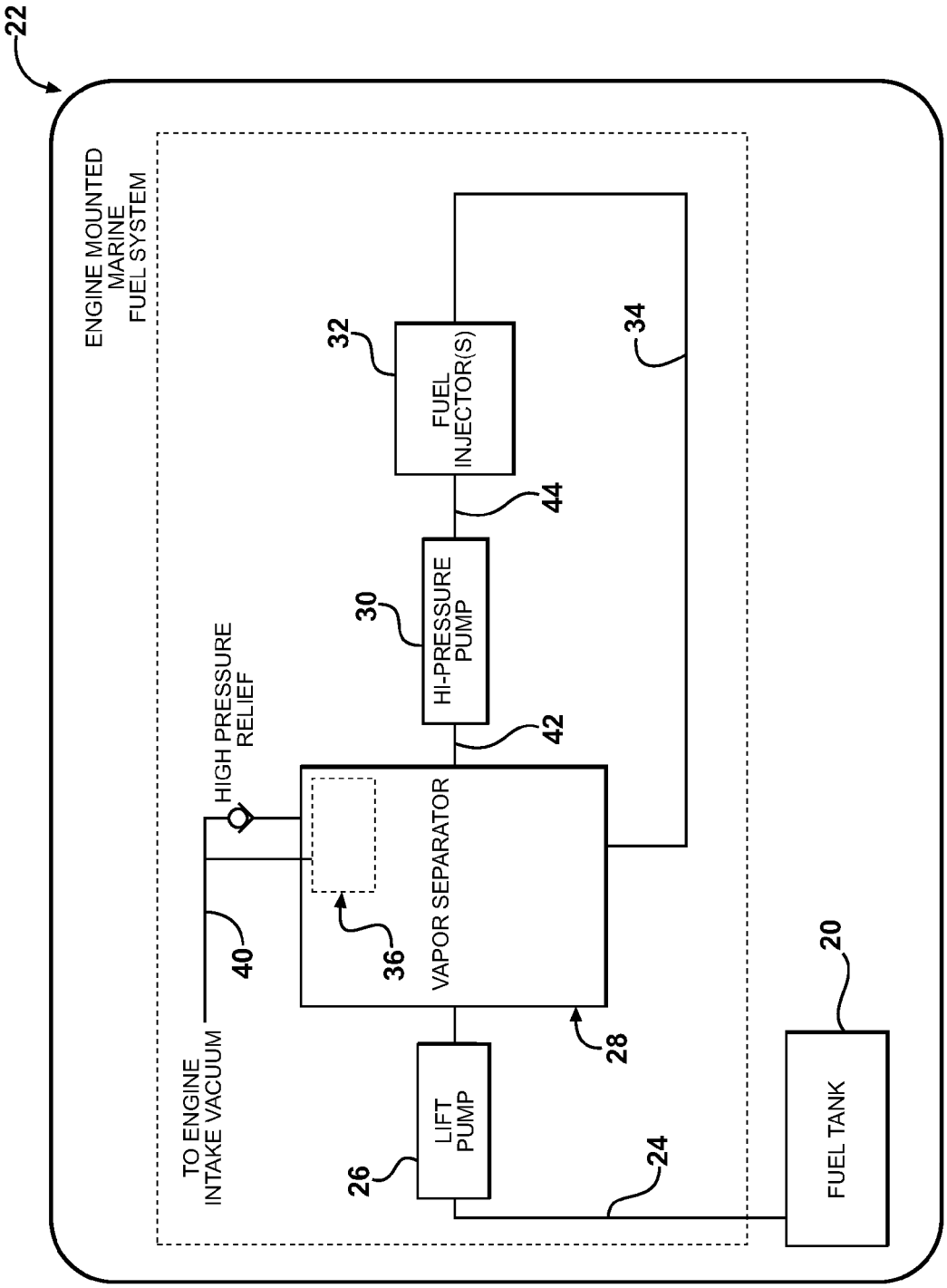
22
ENGINE MOUNTED
MARINE
FUEL SYSTEM
32
FUEL
INJECTOR(S)
34
44
30
HI-PRESSURE
PUMP
42
HIGH PRESSURE
RELIEF
VAPOR SEPARATOR
36
40
TO ENGINE
INTAKE VACUUM
28
26
LIFT
PUMP
24
20
FUEL TANK

FIG - 2

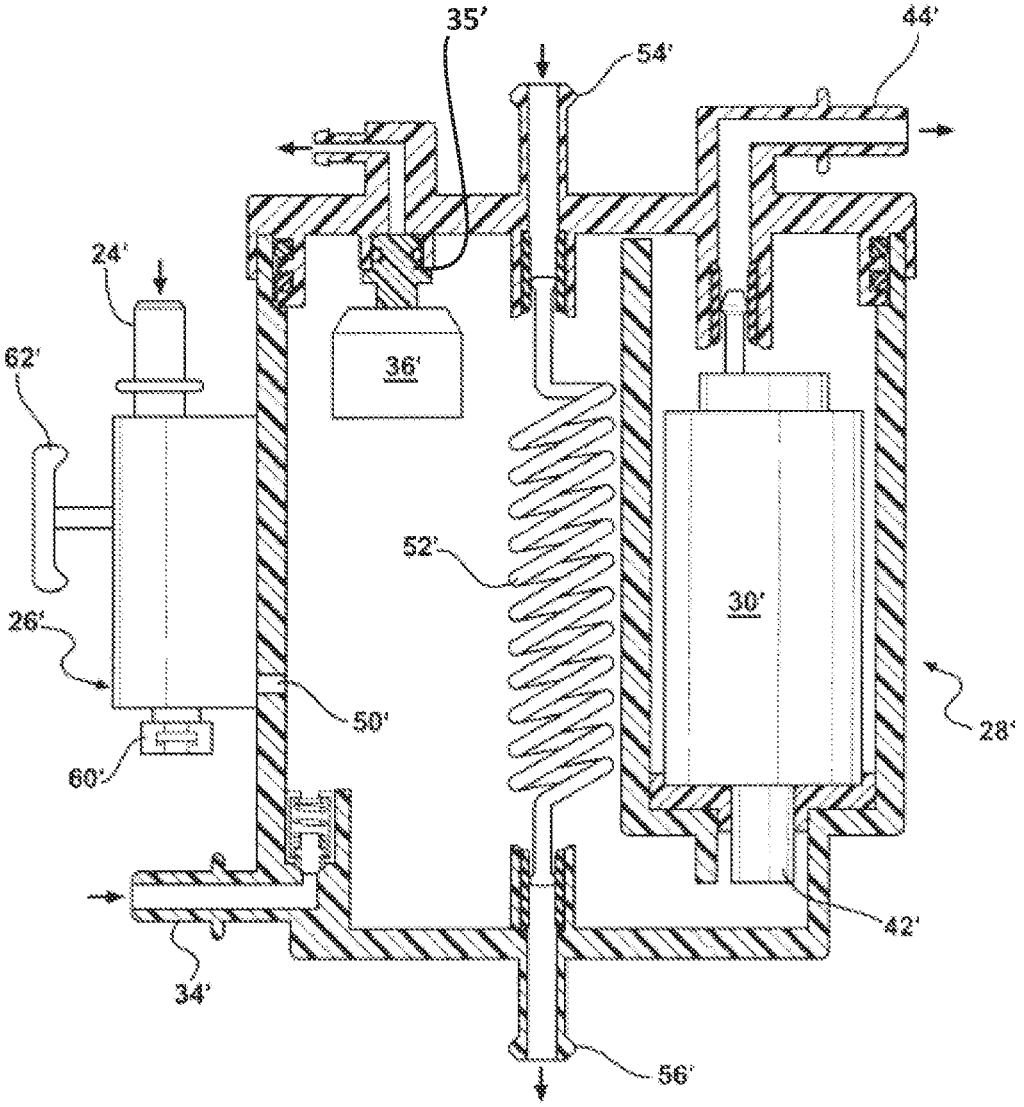

FIG - 3
PRIOR ART

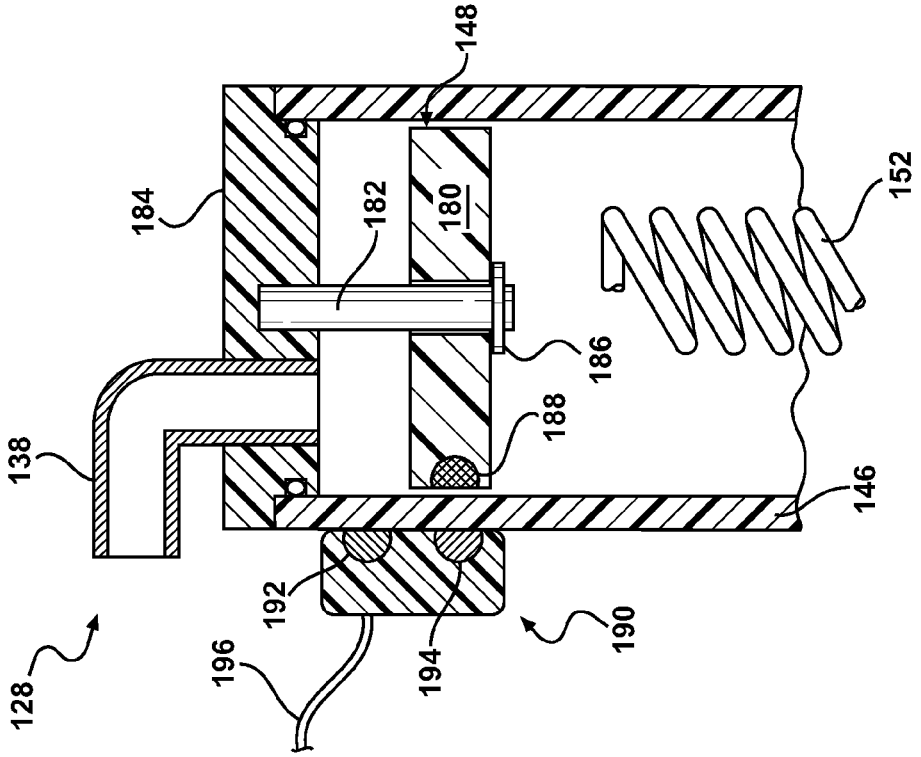
148
184
182
180
152
186
188
138
146
192
194
190
196
128

FIG - 4B

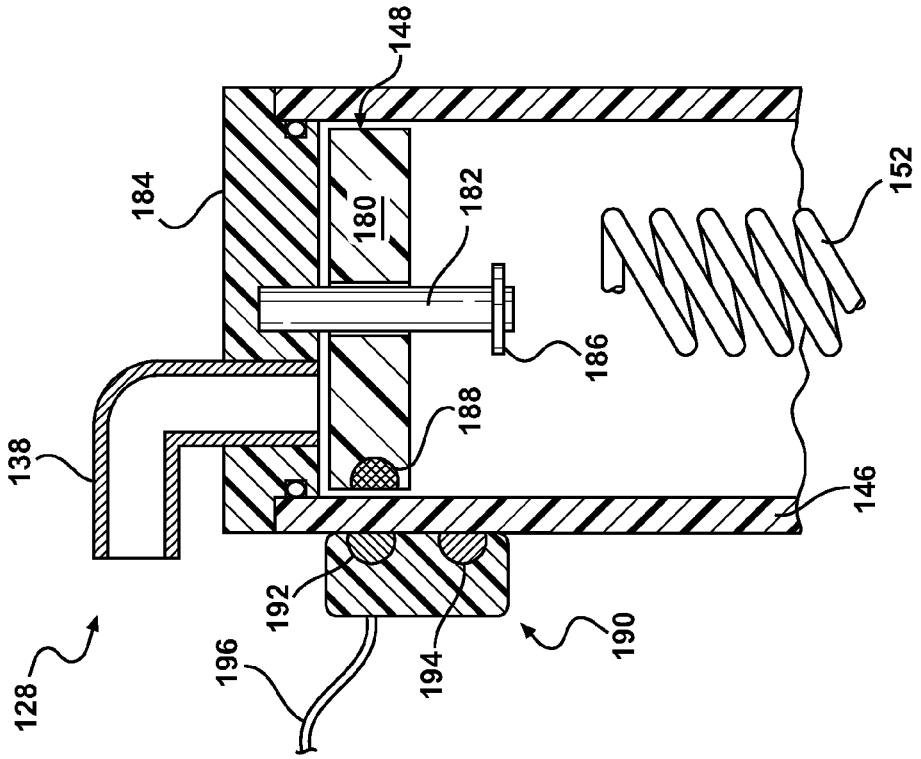
148
184
180
182
152
186
188
138
146
192
194
190
196
128

FIG - 4A

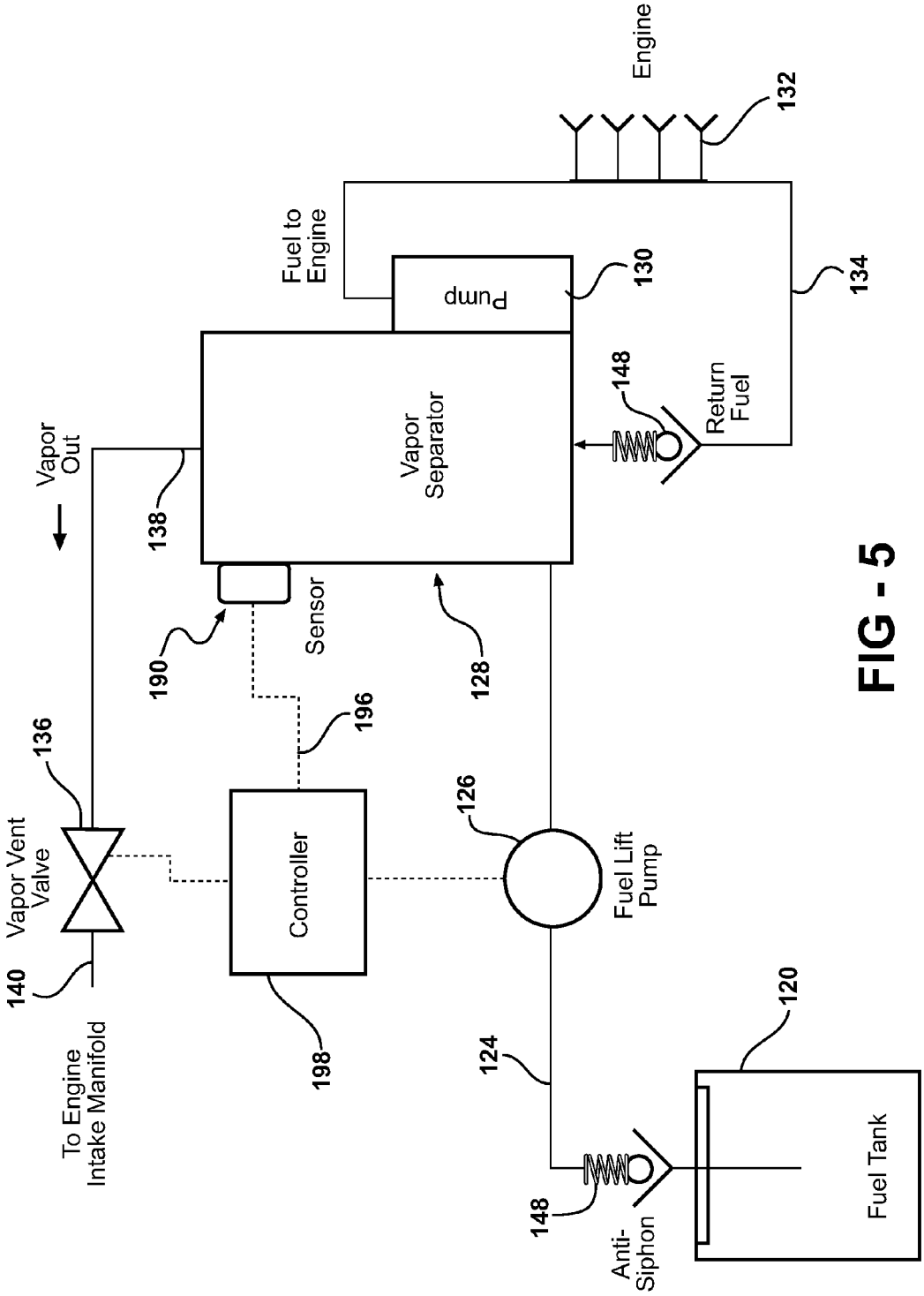
Engine
132
Fuel to Engine
Pump
130
134
148
Return Fuel
Vapor Separator
Vapor Out
138
190
Sensor
128
196
136
Vapor Vent Valve
Controller
126
Fuel Lift Pump
140
To Engine Intake Manifold
198
124
120
148
Anti-Siphon
Fuel Tank

FIG - 5

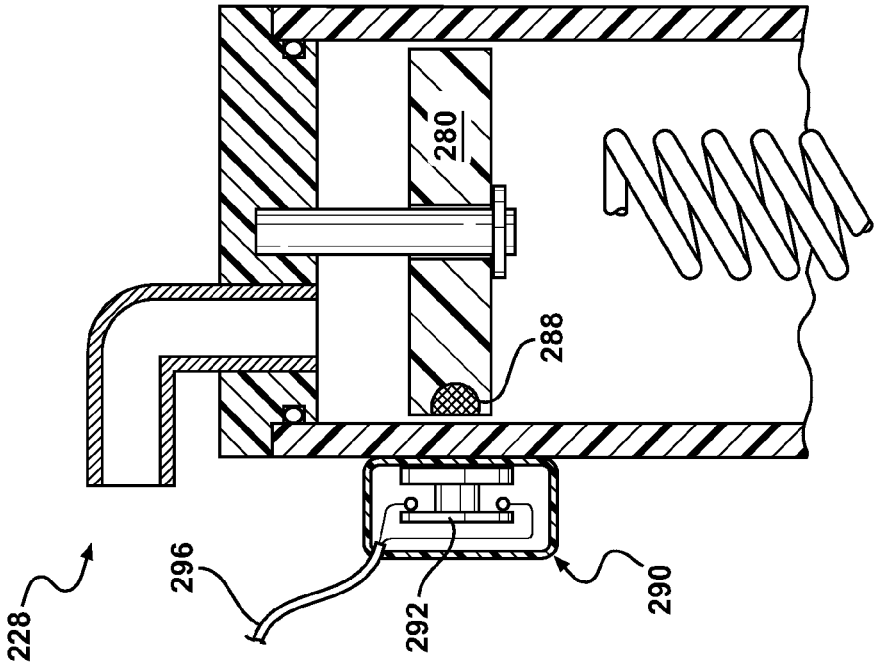

FIG - 6B

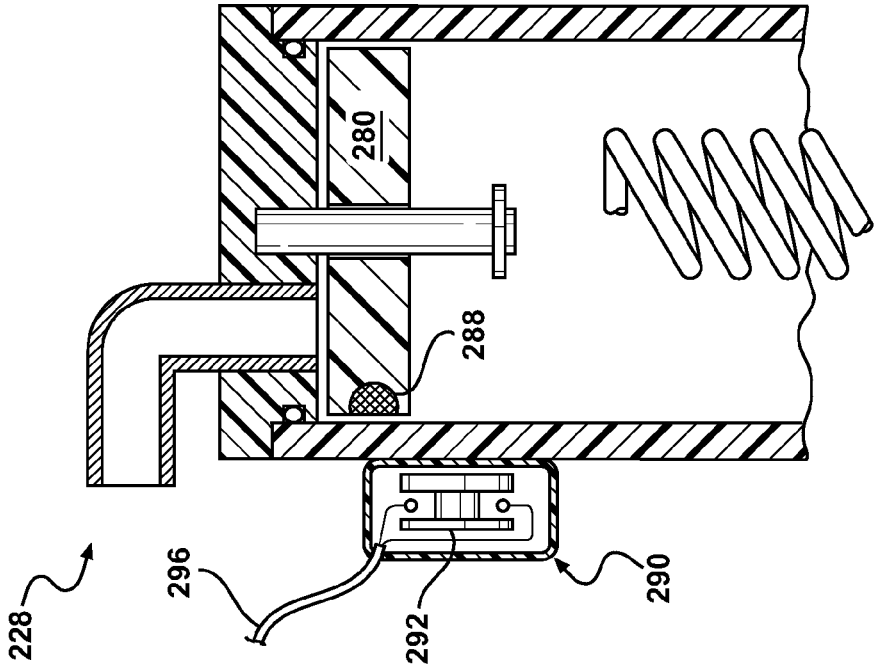

FIG - 6A

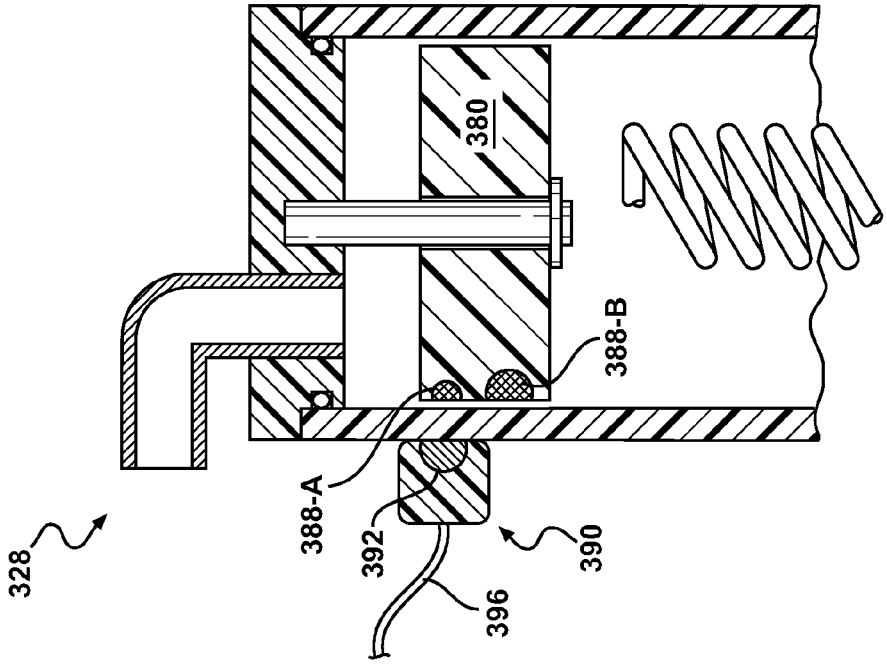

FIG - 7B

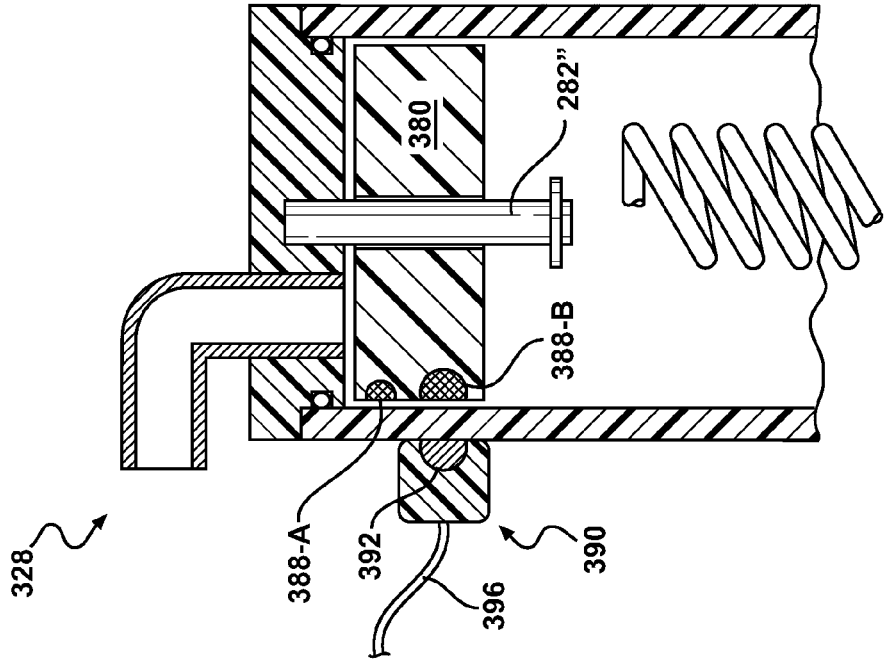

FIG - 7A

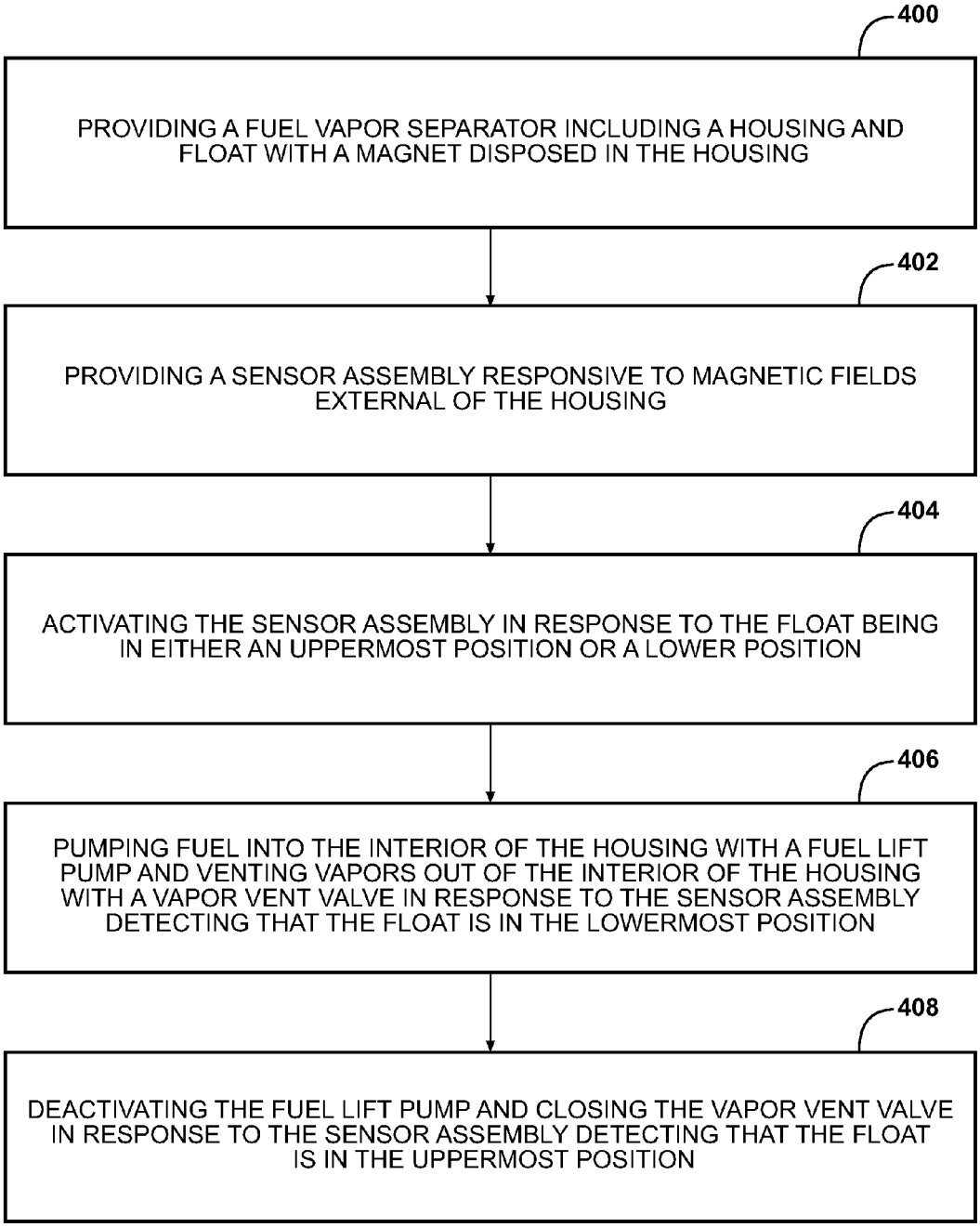
400
PROVIDING A FUEL VAPOR SEPARATOR INCLUDING A HOUSING AND FLOAT WITH A MAGNET DISPOSED IN THE HOUSING
402
PROVIDING A SENSOR ASSEMBLY RESPONSIVE TO MAGNETIC FIELDS EXTERNAL OF THE HOUSING
404
ACTIVATING THE SENSOR ASSEMBLY IN RESPONSE TO THE FLOAT BEING IN EITHER AN UPPERMOST POSITION OR A LOWER POSITION
406
PUMPING FUEL INTO THE INTERIOR OF THE HOUSING WITH A FUEL LIFT PUMP AND VENTING VAPORS OUT OF THE INTERIOR OF THE HOUSING WITH A VAPOR VENT VALVE IN RESPONSE TO THE SENSOR ASSEMBLY DETECTING THAT THE FLOAT IS IN THE LOWERMOST POSITION
408
DEACTIVATING THE FUEL LIFT PUMP AND CLOSING THE VAPOR VENT VALVE IN RESPONSE TO THE SENSOR ASSEMBLY DETECTING THAT THE FLOAT IS IN THE UPPERMOST POSITION

FIG - 8

FUEL LEVEL SENSOR FOR MARINE FUEL VAPOR SEPARATOR EXTERNAL TO UNIT

CROSS REFERENCE TO RELATED APPLICATIONS

This application claims priority to Provisional Patent Application No. 61/434,461 filed Jan. 20, 2011, the entire disclosure of which is hereby incorporated by reference and relied upon.

BACKGROUND OF THE INVENTION

1. Field of the Invention

The present invention is related to vapor separators, and more particularly to vapor separators for fuel systems of marine engines.

2. Related Art

Fuel vapor is a long recognized issue in the marine fuel industry. Small outboard marine engines, including transom mounted and stern drive units frequently utilize an integrated fuel system which draws liquid fuel under suction from a can or tank located in the boat. The fuel is drawn under suction because boat safety regulations require that fuel routed between the tank and engine be sucked under a vacuum to prevent fuel from spilling into the boat should the fuel line rupture. However, the fact that fuel is withdrawn from the tank at a negative pressure can be problematic because, at such low pressures, the fuel can readily evaporate. This, combined with the vapor-producing effects of high temperatures and jarring conditions, could lead to vapor lock and diminished pumping efficiencies if not addressed.

The excessive vapor issue is typically addressed by routing the fuel through a fuel vapor separator unit and then delivering it at a high pressure to the fuel injection system of the engine. In addition to the naturally arising vapors from the vacuum drawing steps, unused, hot fuel from the fuel rail is returned to the vapor separator where fuel vapors are condensed back to liquid before the fuel is reintroduced to the high pressure pump and fuel rail. Uncondensed fuel vapors can be vented to atmosphere or pulled into the engine intake system through a vacuum line connection.

FIGS. **1** and **2** generally depict an outboard marine engine **12** affixed to the transom **14** of a boat, as described more fully in Applicant's U.S. Pat. No. 7,503,314, the entire disclosure of which is hereby incorporated by reference. Outboard marine engines **12** of this type are often mounted to a bracket **16** so that the engine **12** can be quickly removed from the boat for transportation and/or maintenance. The bracket **16** in this example allows the motor head to be rotated about axis A launching, shallow conditions maneuvering, and trim control.

An engine of the type shown in FIG. **1**, as well as other marine engine types, commonly run on a liquid fuel like gasoline or ethanol. Liquid fuel is drawn from a fuel tank **20** by an engine-mounted marine fuel system, such as the system generally shown at **22** in FIG. **2**. Except for the fuel tank **20** and a supply line **24**, the remainder of the fuel system **22** is typically (but not necessarily) integrated into the engine **12**.

In operation, a low pressure fuel supply pump **26** sucks fuel from the tank **20** through the supply line **24**. The fuel is delivered to a vapor separator, generally indicated at **28**. The vapor separator **28** collects and discharges vapors given off from the incoming low pressure fuel and also from the hot, agitated fuel returning from the engine **12**. A high pressure pump **30** then pumps the fuel under pressure into the fuel injector system **32** to be consumed by the engine. Unused fuel is returned to the vapor separator **28** via return line **34**. A vent valve device, generally indicated at **36**, may be provided for connection to the engine intake vacuum system. The vacuum system creates a negative pressure in the vent line **40** so that fuel vapors can be cycled through the engine **12**.

The low pressure fuel supply pump **26**, also known as a lift pump, may be of the pulsed diaphragm type or any other suitable type. Diaphragm type fuel pumps are sometimes preferred in these applications because they are less susceptible to pumping problems when the fuel is hot and there is a high vapor concentration. Typically, these pulsed diaphragm pumps are operated by air pressure fluctuations generated in the crank case portion of the engine **12**. One exemplary pulse pump is shown in Applicant's own U.S. Pat. No. 6,158,972, which is incorporated herein by reference in its entirety.

FIG. **3** shows a simplified, cross-sectional view of one known type of fuel vapor separator assembly **28'**. The lift pump **26'** is of the diaphragm type but not energized by engine pulses. Rather, an electro-mechanical device is used to reciprocate a diaphragm (not shown) within the lift pump **26'** to generate the vacuum. The electro-mechanical device may be a linear motor (e.g., a solenoid), a rotating shaft motor, or any other type of electro-mechanical machine. Fuel is drawn, under vacuum, from a tank (not shown) through the supply line **24'** and discharged into the interior of the fuel vapor separator assembly **28'** via inlet **50'**. Hot fuel returning from the fuel injectors via return line **34'** also enters the interior of the vapor separator assembly **28'** and intermingles with fuel delivered from the lift pump **26'**. A cooling tube **52'** is positioned inside the vapor separator **28'** for the purpose of exchanging heat and reducing the temperature of fuel inside the vapor separator **28'**. A continuous supply of water is fed through the cooling tube **52'** from an inlet **54'** to an outlet **56'**. A vapor vent **35'** allows fuel vapors to be drawn out of the fuel vapor separator **28'**. A high pressure pump **30'** draws fuel from a fuel intake **42'** and discharges the fuel through an outlet **44'** to the fuel injection system of the engine.

Considering the lift pump **26'** in greater detail, FIG. **3** shows an power source **60'** for powering the electro-mechanical device inside the lift pump **26'**. A manual prime lever **62'** may be included for the purpose of manually priming the lift pump **26'** in appropriate circumstances.

As will be understood by those of skill in the art, many known vapor separators, such as those described above in connection with FIGS. **2** and **3**, use a float/needle assembly **36**, **36'** for fuel vapor out control and/or fuel inlet control. However, such float/needle assemblies **36**, **36'** are susceptible to wear and leakage. Alternative concepts have been developed using electronic sensors (not shown) disposed inside of the vapor separator unit which require routing wires through the separator housing some form of pass-through sealed connector. Such pass-through sealed connectors often leak and can be associated with common failure modes.

SUMMARY OF THE INVENTION

At least one aspect of the subject invention provides for a marine fuel vapor separator with an externally mounted sensor. The vapor separator includes a housing having an open interior and a float disposed in the housing. The float is moveable in a vertical direction in response to changing fluid levels in the open interior between a pair of pre-established constraints. At least one magnet is disposed on the float, and a sensor assembly which is responsive to movement of the magnet is disposed externally of the housing. When the fluid level of the tank lowers, the sensor assembly detects the lowering of the float and transmits a signal to a controller, which takes remedial action by activating a fuel lift pump to

pump additional fuel into the vapor fuel separator and/or opening a vapor vent valve to discharge vapors out of the fuel vapor separator.

The externally mounted sensor assembly with the separate vapor vent valve is advantageous over float/needle assemblies because it is less susceptible to wear and leakage. Additionally, because the sensor is mounted externally of the housing, a pass-through connector for running wires into the housing is not required. Thus, the fuel vapor separator is more reliable and less susceptible to wear and leakage than other known fuel vapor separators.

The marine fuel vapor separator could be used with any type of boat engine, e.g. an outboard motor, an inboard/outboard motor or an inboard motor. It could also be mounted internally to or externally of to the engine. The sensor assembly could be any type of sensor assembly which is responsive to magnetic fields including, for example, a Hall effect sensor or a reed-type sensor. A Hall Effect sensor might be preferred for reliability purposes because it has no moving parts.

According to another aspect of the invention, the sensor assembly includes a pair of sensor elements spaced vertically from one another. One of the sensor elements generates an electric signal when the float and magnet are in an uppermost position, and the other sensor element generates a different electrical signal when the float and magnet are in a lowermost position.

According to yet another aspect of the invention, a pair of magnets spaced vertically from one another are disposed on the float, and the sensor assembly only includes a single sensor element. The magnets have either different strengths from one another or different polarities. When the float is in an uppermost position, one of the magnets is in proximity with the sensor element, and the sensor element generates a signal. When the float is in the lowermost position, the other magnet is in proximity with the sensor element, and the sensor element generates a different signal.

BRIEF DESCRIPTION OF THE DRAWINGS

These and other features and advantages of the present invention will be readily appreciated, as the same becomes better understood by reference to the following detailed description when considered in connection with the accompanying drawings wherein:

FIG. **1** is a side and elevation view of a known outboard marine engine;

FIG. **2** is a schematic view of a known engine mounted marine fuel system;

FIG. **3** is a cross-sectional view of a known vapor fuel separator;

FIG. **4**A is a cross-sectional and fragmentary view of a vapor separator constructed according to one aspect of the invention with a float being in an uppermost position;

FIG. **4**B is a cross-sectional and fragmentary view of the vapor separator of FIG. **4**A and with the float being in a lowermost position;

FIG. **5** is a schematic view of a marine fuel delivery system constructed according to an aspect of the subject invention;

FIG. **6**A is a cross-sectional and fragmentary view of a vapor separator constructed according to another aspect of the invention with a float being in an uppermost position;

FIG. **6**B is a cross-sectional and fragmentary view of the vapor separator of FIG. **6**A and with the float being in a lowermost position;

FIG. **7**A is a cross-sectional and fragmentary view of a vapor separator constructed according to yet another aspect of the subject invention and with the float being in an uppermost position;

FIG. **7**B is a cross-sectional and fragmentary view of the vapor separator of FIG. **7**A and with the float being in a lowermost position; and

FIG. **8** is a flow chart of an exemplary method of operating a marine fuel delivery system.

DETAILED DESCRIPTION OF THE PREFERRED EMBODIMENT

Referring to FIGS. **4**A and **4**B, a fuel vapor separator assembly constructed according to one aspect of the present invention is shown generally at **128**. For convenience, features like or corresponding to in those described above are indicated with previously established reference numerals together with factors offset by 100. In this design, the float assembly **148** includes a puck-like float body **180** slideably carried on a short shaft **182** extending downwardly from a cap **184** on a housing **146**. A retainer clip **186** is attached to the distal end of the shaft **182** as a keeper to trap the float **180** on the shaft **182** and inside the vapor separator **128**. The float body **180** may be circular or any other suitable shape. The float body **180** is less dense than the preferred fuel for the engine, and thus, the float body **180** is responsive to the level of fuel in the vapor separator unit **128** and is moveable along the shaft **182** between an upper constraint established by the cap **184** and a lower constraint established by the retainer clip **186**. The vapor separator **128** also includes a vent pipe **138** extending outwardly from the cap **184** for venting fuel vapors out of the open interior, as will be discussed in further detail below. Further, the fuel vapor separator **128** includes a cooling tube **152** for exchanging heat between water and the fuel in the fuel vapor separator **128**. The fuel vapor separator **128** could be used with any desirable type of marine engine including, for example, outboard engines, inboard/outboard engines or inboard engines.

At least a portion of the outer edge, or the perimeter, of the float body **180** carries at least one magnet **188**. Directly opposite the magnet **188** and disposed externally of the housing **146** is a sensor assembly **190** which is responsive to magnetic fields. The externally mounted sensor assembly **190** is preferably of the Hall Effect type, i.e. the sensor assembly **190** produces a voltage (the Hall voltage) in response to a magnetic field. Hall Effect sensors generally have no moving parts, and thus, are known to offer enhanced reliability in extreme environments. They also have a long life expectancy as compared to the traditional float/needle assemblies **36**, **36'** described above and other types of electromechanical switches. The sensor assembly **190** can be mounted to the exterior of the housing **146** using any suitable technique, such as welding, brazing, bonding or mechanical fasteners. Preferably, the sensor assembly **190** is encapsulated in an appropriate protective material which does not have to be of a material resistant to fuel because the sensor assembly **190** is not disposed in the interior of the housing **146**.

The sensor assembly **190** of this embodiment is a dual detection type device including first **192** and second **194** sensing elements. Each sensing element **192**, **194** is responsive to the magnet **188** moving into proximity therewith or to the magnet **188** moving away therefrom. In FIG. **4**A, the fuel level in the vapor separator **128** is very high, and thus, the float **180** is shown in an upper-most position such that the magnet **188** is in proximity with the first sensing element **192**. The sensor assembly **190** then generates an electrical signal of the

type well-known to those of skill in the electronic sensor arts. The electrical signal thus generated may be transmitted via an electrical cable **196** or wirelessly to a controller **198** (shown in FIG. **6**), as will be discussed in further detail below. In FIG. **4**B, the fuel level in the vapor separator **128** is low, and thus, the float **180** is in a lower-most position with the second sensing element **194** being in proximity with the magnet **188**. The sensor assembly **190** then generates a different electrical signal which is also transmitted via an electrical cable **196** (or wirelessly) to the controller **198**. As will be discussed in further detail below, when the fuel level in the vapor separator **128** is low, then undesirable fuel vapors are likely present in the vapor separator **128**, which could cause vapor lock if not vented.

A schematic view of the marine fuel delivery system according to one aspect of the subject invention is shown in FIG. **5**. In operation, a lift pump **126** sucks fuel from the fuel tank **120** through the supply line **124**. The fuel is delivered to the vapor separator **128**, which collects and discharges vapors given off from the incoming low pressure fuel and also from the hot agitated fuel returning from the engine (not shown). A high pressure pump **130** then pumps the fuel under pressure into the fuel injector system **132** (or carburetor) to be consumed by the engine. Unused fuel is returned to the vapor separator **128** via a return line **134**. A vent valve device **136** is attached to the vent pipe **138** for selectively allowing vapors to flow into the engine intake manifold via vent line **140** so that the vapors are cycled through the engine and burned. Alternately, the vapors could be discharged into the atmosphere. The fuel delivery system may also include at least one check valve **148** for preventing fuel from flowing back into the fuel PCT/US12/21941 tank **120** from the supply line **124** or from flowing to the fuel injectors **132** through the return line **134**.

Referring back to FIGS. **4**A and **4**B, as discussed above, the first sensing element **192** is associated with a high fuel condition and the second sensing element **194** is associated with a low fuel condition. When the float **180** drops enough for the second sensor element **194** to detect the presence of the magnet **188**, a signal is provided to a controller **198**. The controller **198**, in turn, takes remedial action by turning on the fuel lift pump **126** to inject more fuel into the vapor separator **128** and/or opening a vapor vent valve **136** to vent the fuel vapors out of the vapor separator **128**. When the float **180** rises high enough for the first sensor element **192** to detect the presence of the magnet **188**, a different signal is provided by the sensor assembly **190** to the controller **198**, which takes remedial action by turning off the fuel lift pump **126** and/or by closing the vapor vent valve **136**.

Those of skill in the art will appreciate alternative mounting arrangements for the float **180**, such as a pivoting mount rather than the sliding arrangement shown. Other designs could also be implemented without departing from this concept of an externally mounted Hall Effect fuel level sensor **190** for a marine fuel vapor separator unit **128**, which eliminates the need for pass-through connectors and enables a simplified design of the vapor separator unit **128** that is less susceptible to premature wear.

FIGS. **6**A and **6**B are similar to the FIGS. **4**A and **4**B, but illustrate a vapor separator **228** constructed according to an alternate aspect of the invention wherein like or corresponding parts use the same reference numbers but offset by 100. In this embodiment, the sensor assembly **290** includes only a single, reed-type sensor element **292** as opposed to the two sensor elements **192**, **194** discussed above. As will be appreciated by those having skill in the art of electronics, a reed-type switch is an electrical switch which is either opens or closes in the presence of a magnetic field and returns to a rest state (either open or closed) when separated from the magnetic field. In this embodiment, the magnet **288** carried in the float **280** acts on the reed switch element **292** when the float **280** and the magnet **288** are in the lower-most position shown in FIG. **6**B. The sensor assembly **290**, in turn, generates an electrical signal which is transmitted via the electrical cable **296** (or wirelessly) to a controller. Upon receiving the electrical signal, the controller takes remedial action, which might be turning the lift pump on and/or opening the vapor vent valve. It should be appreciated that the sensor assembly **290** could alternately be positioned to generate the electrical signal when the float **280** is in the upper-most condition. Even further, the reed-type switch assembly could be re-configured to operate in a dual-signal manner similar to the sensor assembly **190** shown in FIGS. **4**A and **4**B and discussed above.

FIGS. **7**A and **7**B are similar to the FIGS. **4**A and **4**B, but illustrate a vapor separator **328** constructed according to yet another aspect of the invention wherein like or corresponding parts use the same reference numbers but offset by 200. In this embodiment, the sensor assembly **390** includes only a single sensor element **392**, and the float **380** carries two magnets **388**-A and **388**-B which are vertically spaced from one another and have either two different strengths or two different polarities. In this embodiment, magnet **388**-A acts on the sensor element **392** when the float **380** is in lower-most condition shown in FIG. **7**B. The sensor assembly **390**, in turn, generates an electrical signal which is transmitted via the electrical cable **396** (or wirelessly) to a controller. Upon receiving the electrical signal, the controller takes remedial action, which might be turning the fuel lift pump on to pump more fuel into the fuel vapor separator **328** and/or opening the vapor vent valve to discharge vapor from the fuel vapor separator **328**. Then, when the float **380** is raised to the position shown in FIG. **7**A, magnet **388**-B, which has a different strength or a different polarity than magnet **388**-A, acts on the sensor element **392**. The sensor assembly **390**, in turn, generates a different electrical signal which is transmitted via the electrical cable **396** (or wirelessly) to the controller. Upon receiving this electrical signal, the controller takes remedial action, which might be turning the lift pump off and/or closing the vent valve. It should be appreciated that this embodiment of the vapor separator **328** could be reconfigured to accommodate a reed-type switch element, like that shown in FIGS. **6**A and **6**B.

Referring now to the flow chart of FIG. **8**, the vapor separator **128** of FIG. **4** and the marine fuel delivery system of FIG. **5**, another aspect of the present invention is a method of operating a marine fuel delivery system. The method starts with the step **400** of providing a fuel vapor separator **128** having an open interior with a float **180** disposed therein, wherein the float **180** is moveable in the open interior within pre-established constraints in response to changing fluid levels and wherein at least one magnet **188** is disposed on the float **180**. The method continues with the step **402** of providing a sensor assembly **190** responsive to the magnet **188** and disposed externally of the fuel vapor separator **128**. As discussed above, the sensor assembly **190** could be, for example, a Hall Effect type sensor, a reed-type sensor or any other type of sensor responsive to magnetic fields.

The method then continues with the step **404** of activating the sensor assembly **190** in response to the float **180** being in either the upper or the lower of the vertically spaced pre-established constraints. The method may also include the step **406** of pumping fuel into the open interior of the fuel vapor separator **128** with a fuel lift pump **126** and/or venting fuel vapors out of the open interior with a vapor vent valve **136** in

response to the sensor assembly **190** detecting that the float **180** is in the lower of the pre-established constraints. The method may additionally include the step **408** of deactivating the fuel lift pump **126** and/or closing the vapor vent valve **136** in response to the sensor assembly **190** detecting that the float **180** is in the upper of the pre-established constraints.

The foregoing invention has been described in accordance with the relevant legal standards, thus the description is exemplary rather than limiting in nature. Variations and modifications to the disclosed embodiment may become apparent to those skilled in the art and fall within the scope of the invention.

What is claimed is:

1. A fuel vapor separator apparatus comprising:

a low pressure pump configured to pump fuel from a fuel tank;

a vapor separator chamber configured to (i) receive the fuel pumped from the fuel tank, (ii) contain the received fuel, (iii) enable vapor to separate from the fuel while the fuel is contained in the vapor separator chamber, and (iv) provide the fuel to an engine;

a vent pipe extending from a top end of the chamber to channel a flow of the vapor out of the chamber;

a float that is located in the chamber, and configured to move vertically with vertical movement of a level of the fuel in the chamber, and vertically constrained between an uppermost position and a lowermost position;

a magnet assembly that is located inside the chamber and includes:

an upper magnet that is on the float and is configured to enable detecting that the float is at a lower level; and

a lower magnet that is on the float and lower than the upper magnet and of different magnetic strength or different magnetic polarity than the upper magnet, and is configured to enable detecting that the float is at an upper level;

a sensor that is located outside the chamber and configured to be acted on by the lower magnet when the float is in the uppermost position and to be acted on by the upper magnet when the float is in the lowermost position, to detect, based on the difference in the magnetic strength or the difference in magnetic polarity, whether the float is at the higher level or at the lower level; and

a valve that is located along the vent pipe and configured to selectively enable and disable flow of the vapor out of the chamber;

a controller configured to:

in response to detecting that the float is at the lower level, (i) turn on the low pressure pump and (ii) control the valve to enable flow of the vapor out of the chamber, and

in response to detecting that the float is at the upper level, (i) turn off the low pressure pump and (ii) control the valve to disable flow of the vapor out of the chamber.

2. The apparatus of claim **1**, wherein the apparatus is configured for the vapor, that flows out of the chamber through the vent pipe, to be discharged to the atmosphere.

3. The apparatus of claim **1**, further comprising a high pressure pump configured to pump the fuel from the chamber to the engine.

4. A fuel vapor separator apparatus comprising:

a low pressure pump configured to pump fuel from a fuel tank;

a vapor separator chamber configured to (i) receive the pumped fuel from the low pressure pump, (ii) contain the received fuel, (iii) enable vapor to separate from the fuel while the fuel is contained in the vapor separator chamber, and (iv) provide the fuel to an engine;

a float that is located in the chamber, and configured to move vertically with vertical movement of a level of the fuel in the chamber, and vertically constrained between an uppermost position and a lowermost position;

a magnet assembly that is located inside the chamber and includes:

an upper magnet that is on the float and is configured to enable detecting that the float is at a lower level; and

a lower magnet that is on the float and lower than the upper magnet and of different magnetic strength or different magnetic polarity than the upper magnet, and is configured to enable detecting that the float is at an upper level;

a sensor that is located outside the chamber and configured to be acted on by the lower magnet when the float is in the uppermost position and to be acted on by the upper magnet when the float is in the lowermost position, to detect, based on the difference in the magnetic strength or the difference in magnetic polarity, whether the float is at the higher level or at the lower level; and

a controller configured to (i) turn on the low pressure pump in response to detecting that the float is at the lower level and (ii) turn off the low pressure pump in response to detecting that the float is at the upper level.

5. The apparatus of claim **1**, further comprising a valve configured to be controlled by the controller to (i) enable flow of the vapor out of the chamber in response to detecting that the float is at the lower level and (ii) disable flow of the vapor out of the chamber in response to detecting that the float is at the upper level.

6. The apparatus of claim **5**, further comprising a vent pipe extending from the chamber to channel a flow of the vapor out of the chamber, wherein the valve is located along the vent pipe.

7. The apparatus of claim **6**, wherein the vent pipe extends from the top end of the chamber to the engine.

8. The apparatus of claim **6**, wherein the apparatus is configured for the vapor that flows out of the chamber through the vent pipe to be discharged to the atmosphere.

9. The apparatus of claim **1**, further comprising a high pressure pump configured to pump the fuel from the chamber to the engine.

10. The apparatus of claim **1**, wherein the apparatus is configured for the vapor, that flows out of the chamber through the vent pipe, to be discharged to the engine.

* * * * *