US009201454B2

(12) **United States Patent**
Haupt et al.

(10) **Patent No.: US 9,201,454 B2**
(45) **Date of Patent: Dec. 1, 2015**

(54) **MOLDING A DISPLAY SCREEN INTO A HOUSING OF AN ELECTRONIC DEVICE**

(71) Applicant: **Motorola Mobility LLC**, Libertyville, IL (US)

(72) Inventors: **Eric Haupt**, Round Lake Beach, IL (US); **Joseph L. Allore**, Mundelein, IL (US); **Michael Formenti**, Channahon, IL (US)

(73) Assignee: **Google Technology Holdings LLC**, Mountain View, CA (US)

(*) Notice: Subject to any disclaimer, the term of this patent is extended or adjusted under 35 U.S.C. 154(b) by 0 days.

(21) Appl. No.: **14/082,733**

(22) Filed: **Nov. 18, 2013**

(65) **Prior Publication Data**

US 2014/0368981 A1 Dec. 18, 2014

Related U.S. Application Data

(60) Provisional application No. 61/836,464, filed on Jun. 18, 2013.

(51) **Int. Cl.**

G02F 1/1333	(2006.01)
G06F 1/16	(2006.01)
G02F 1/1335	(2006.01)

(52) **U.S. Cl.**
CPC ***G06F 1/1626*** (2013.01); ***G02F 1/133308*** (2013.01); ***G02F 1/133608*** (2013.01)

(58) **Field of Classification Search**
CPC G02F 1/133308; G02F 1/133608
See application file for complete search history.

(56) **References Cited**

U.S. PATENT DOCUMENTS

6,382,448	B1	5/2002	Yuhara et al.	
7,401,758	B2	7/2008	Liang et al.	
2014/0285967	A1 *	9/2014	Wikander et al.	361/679.54

* cited by examiner

Primary Examiner — Phu Vu
(74) *Attorney, Agent, or Firm* — Wolfe-SBMC

(57) **ABSTRACT**

Arrangements described herein relate to molding of a display screen into a housing of an electronic device. Ad adhesive can be applied to a side of a plastic film to form an adhesion member. The adhesion member can be connected to the display screen, the adhesive bonding to the plastic film to a peripheral region of the display screen. The display screen with the connected adhesion member can be inserted into a housing mold. Plastic resin can be injected into the housing mold to form a housing of the electronic device, the plastic film bonding with the injected plastic resin to secure the display screen into the housing.

16 Claims, 3 Drawing Sheets

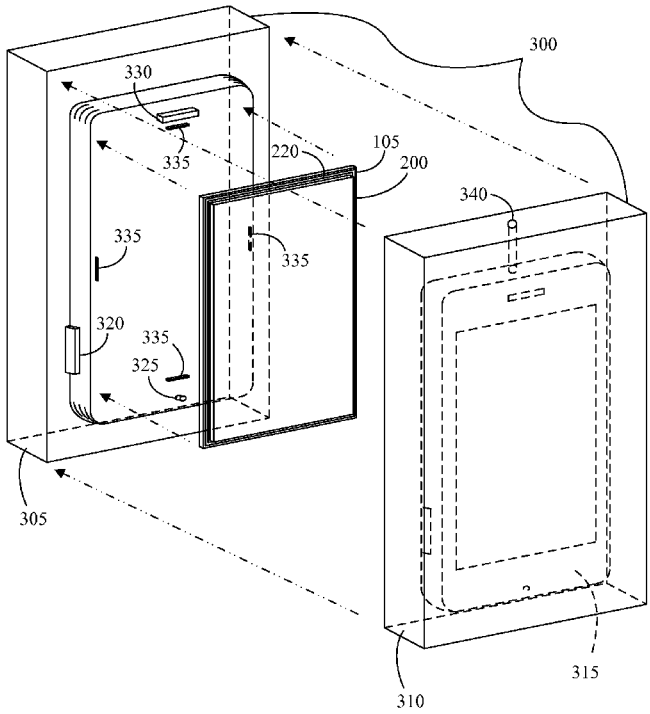

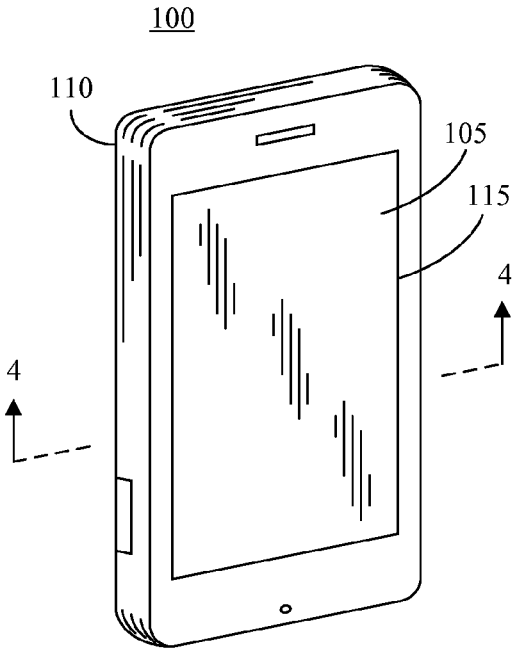
100
110
105
115
4
4

FIG. 1

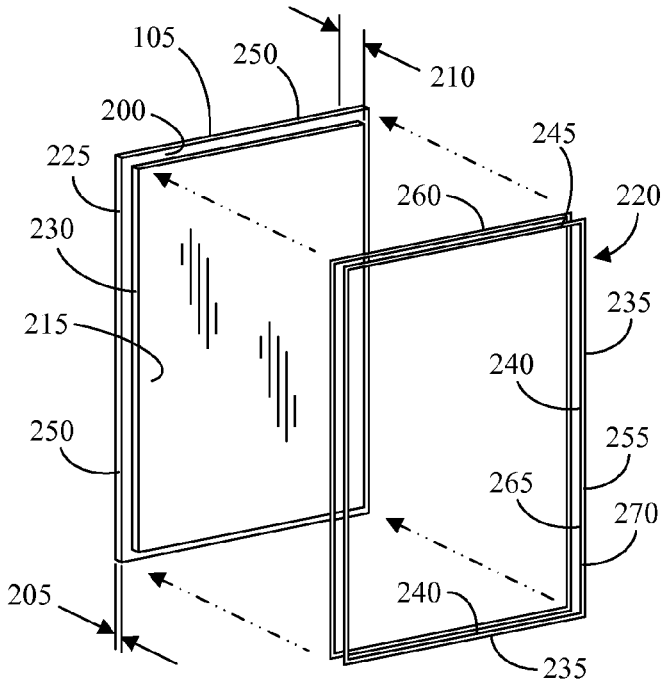
105
250
210
200
245
225
260
220
230
235
215
240
250
255
265
270
205
240
235

FIG. 2

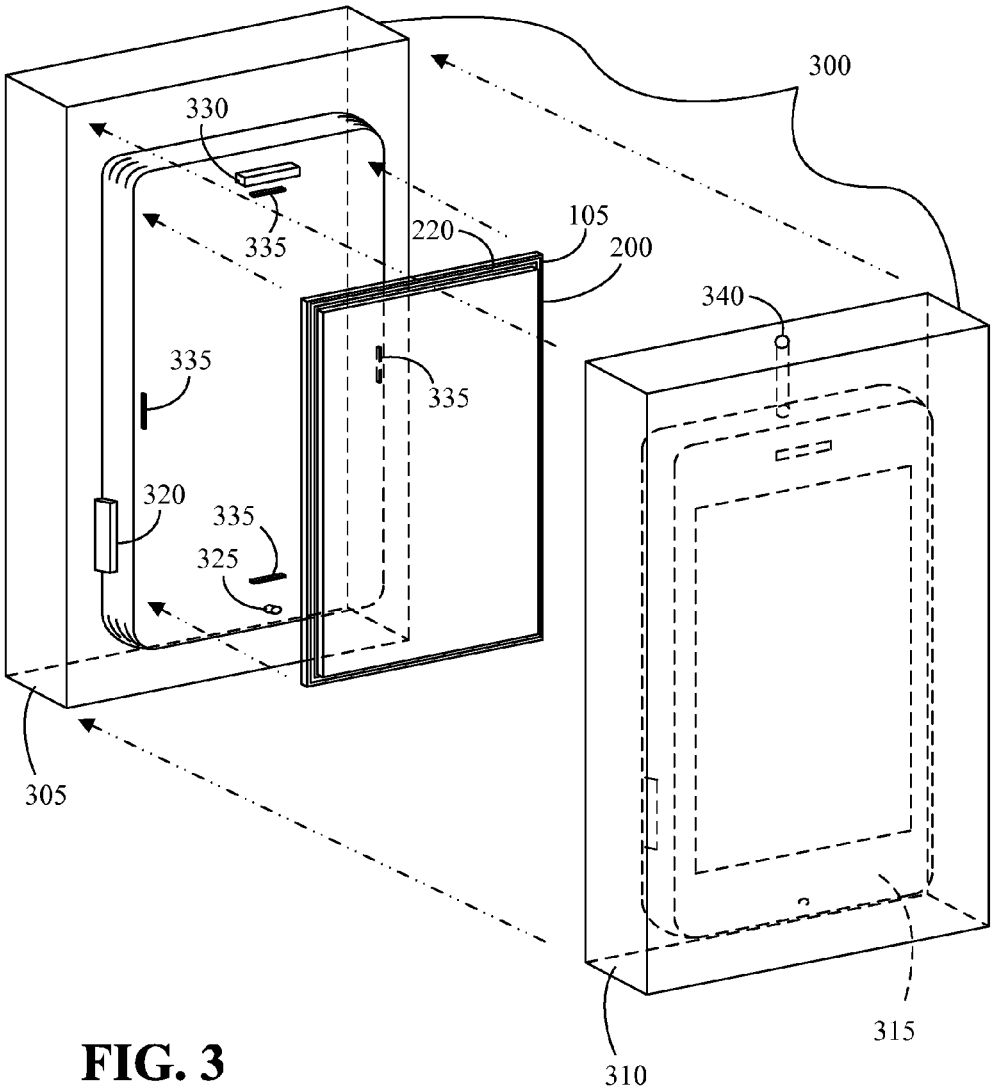
300
330
335
220
105
200
340
335
335
320
335
325
305
310
315

FIG. 3

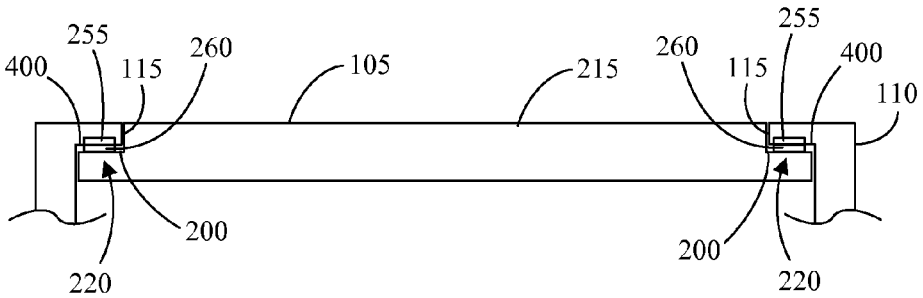
255
400
115
260
105
215
260
115
255
400
110
200
220
200
220

FIG. 4

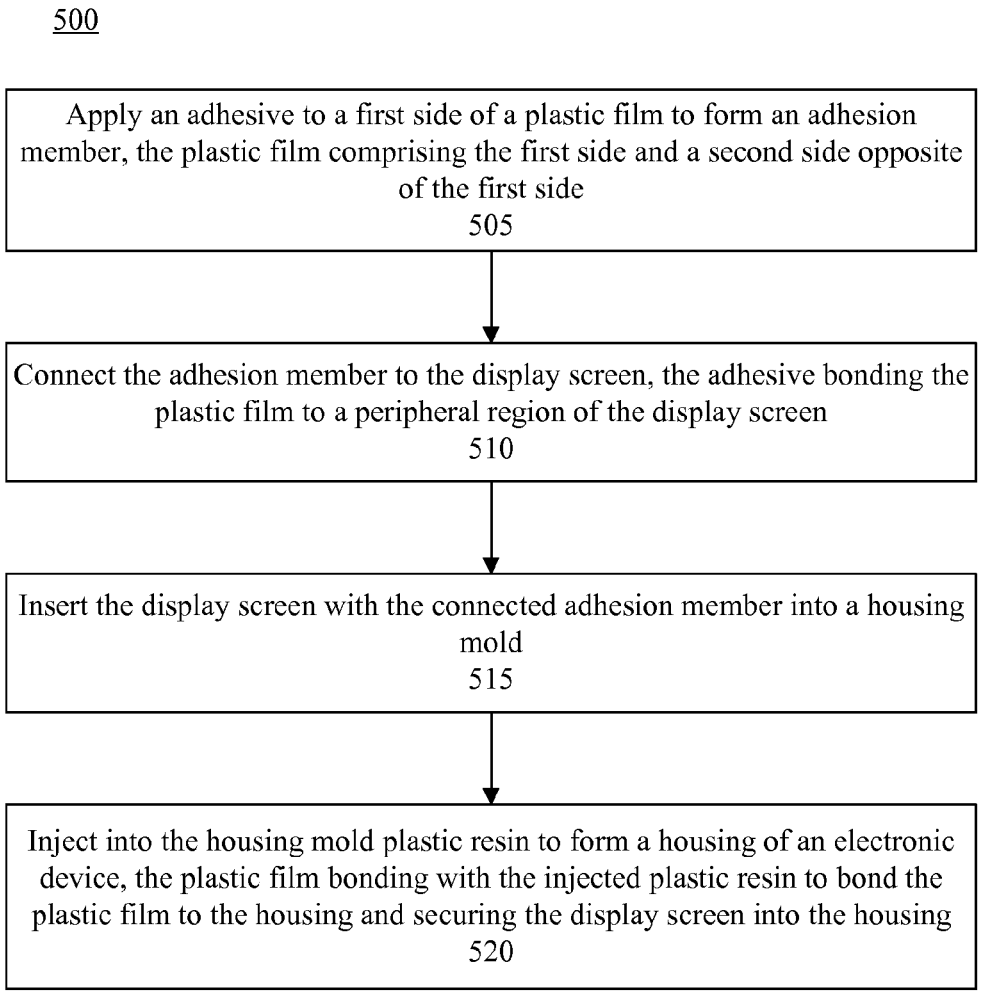
500
Apply an adhesive to a first side of a plastic film to form an adhesion member, the plastic film comprising the first side and a second side opposite of the first side
505
Connect the adhesion member to the display screen, the adhesive bonding the plastic film to a peripheral region of the display screen
510
Insert the display screen with the connected adhesion member into a housing mold
515
Inject into the housing mold plastic resin to form a housing of an electronic device, the plastic film bonding with the injected plastic resin to bond the plastic film to the housing and securing the display screen into the housing
520

FIG. 5

MOLDING A DISPLAY SCREEN INTO A HOUSING OF AN ELECTRONIC DEVICE

CROSS-REFERENCE TO RELATED APPLICATIONS

This application claims the benefit of application No. 61/836,464, filed on Jun. 18, 2013, which is fully incorporated herein by reference.

BACKGROUND OF THE INVENTION

Arrangements described herein relate to attaching a display screen to a housing of an electronic device.

Contemporary electronic devices oftentimes include a housing in which a display screen is mounted. Examples of such electronic devices include, but are not limited to, smart phones, tablet computers, portable music players, and the like. Oftentimes glue is used to attach the display screen to the housing to fix the display screen into the housing.

BRIEF DESCRIPTION OF THE DRAWINGS

FIG. **1** depicts an electronic device including a display screen, which is useful for understanding various arrangements described herein.

FIG. **2** depicts the display screen of FIG. **1**, which is useful for understanding various arrangements described herein.

FIG. **3** depicts a housing mold, which is useful for understanding various arrangements described herein.

FIG. **4** depicts an enlarged section view of the electronic device FIG. **1**, taken along section line **4-4**, in accordance with one arrangement described herein

FIG. **5** is a flowchart presenting a method of molding a display screen into a housing of electronic device, which is useful for understanding various arrangements described herein.

DETAILED DESCRIPTION

While the specification concludes with claims defining features of the embodiments described herein that are regarded as novel, it is believed that these embodiments will be better understood from a consideration of the description in conjunction with the drawings. As required, detailed arrangements of the present embodiments are disclosed herein; however, it is to be understood that the disclosed arrangements are merely exemplary of the embodiments, which can be embodied in various forms. Therefore, specific structural and functional details disclosed herein are not to be interpreted as limiting, but merely as a basis for the claims and as a representative basis for teaching one skilled in the art to variously employ the present embodiments in virtually any appropriately detailed structure. Further, the terms and phrases used herein are not intended to be limiting but rather to provide an understandable description of the present arrangements.

It will be appreciated that for simplicity and clarity of illustration, elements shown in the figures have not necessarily been drawn to scale. For example, the dimensions of some of the elements may be exaggerated relative to other elements for clarity. Further, where considered appropriate, reference numbers may be repeated among the figures to indicate corresponding or analogous features.

Arrangements described herein relate to molding a display screen into a device housing (hereinafter "housing") of an electronic device. Oftentimes, a display screen is attached to

a housing of an electronic device using glue. When the display screen is pressed into the housing, the glue typically spreads, sometimes extending into areas where it is not desired to have the glue present. For example, the glue sometimes may spread over an edge of a screen of the display screen so that the glue is externally visible on the electronic device. Generally speaking, it is undesirable for the glue to be externally visible. In lieu of glue, the present arrangements implement a die cut adhesive, over which a plastic film is disposed, to mold a display screen into a housing of an electronic device during a plastic injection molding process used to form the housing. The adhesive adheres to the display screen and the plastic film, and plastic film bonds to the housing during the molding process, thereby securing the display screen to the housing. Thus, the issue of glue spreading in an undesirable manner is circumvented.

FIG. **1** depicts an electronic device **100** including a display screen **105**, which is useful for understanding various arrangements described herein. As used herein, the term "display screen" means a generally planar surface on which an image or a series of images are projected or reflected, or through which an image is transmitted. The display screen **105** can be molded into a housing **110** of the electronic device **100**. More particularly, an aperture **115** can be defined in the housing **110**, and the display screen **105** can be positioned within the aperture **115**. Hereinafter the "display screen" may simply be referred to as "screen."

FIG. **2** depicts the display screen **105** of FIG. **1**, which is useful for understanding various arrangements described herein. The display screen **105** can comprise a peripheral region **200** extending around the perimeter of the display screen **105**. The thickness **205** of the display screen **105** at the peripheral region **200** can be less than the thickness **210** of the portion **215** of the display screen **105** that fits into the aperture **115** of FIG. **1**. For example, the difference in thicknesses between the peripheral region **200** and the portion **215** of the display screen **105** can define a step feature. In one arrangement, the display screen **105** can comprise two or more screen layers **225**, **230** bonded together using a suitable bonding agent. For example, the screen layer **230** can define the portion **215** of the display screen **105**, and the peripheral dimensions of the screen layer **230** can be smaller than the peripheral dimensions of the screen layer **225**, thereby exposing the peripheral region **200** on the screen layer **225**.

An adhesion member **220** can be connected to the peripheral region **200** of the display screen **105**. In this regard, the adhesion member **220** can be die cut to suitable dimensions to conform to (e.g., fit onto) the peripheral region **200**. For example, if the display screen **105** is rectangular in shape, the adhesion member **220** also can be rectangular in shape, having outer edges **235** and inner edges **240** defining an aperture **245**. The aperture **245** can be slightly larger than the portion **215** of the display screen **105** (e.g., the screen layer **230**), thus allowing for the adhesion member **220** to fit flush against the peripheral region **200** of the display screen **105**. The peripheral dimensions of the adhesion member **220** can be slightly smaller than the peripheral dimensions of the peripheral region **200** (e.g., smaller than the peripheral dimensions of the screen layer **225**), thus avoiding overhang of the adhesion member **220** over the peripheral edges **250** of the display screen **105**.

The adhesion member **220** can comprise a plastic film **255**, such as polycarbonate film, having a first side **265** configured to face the display screen **105** and a second side **270** opposite the first side **265**, the second side **270** configured to face away from the display screen **105**. The adhesion member **220** also can comprise an adhesive **260** applied to the first side **265** of

the plastic film **255**. The adhesive **260** can bond the adhesion member **220** to the peripheral region **200** of the display screen **105**. In one arrangement, the thickness of the plastic film, prior to the molding process forming the housing, can be between approximately 50 μm and 100 nm. The thickness of the adhesive **260**, prior to the molding process, can be approximately 150 μm and 200 nm. The total thickness of the adhesion member **220**, prior to the molding process, can be between approximately 200 μm and 300 nm.

The adhesive **260** can be selected to bond the plastic film **255** to the display screen **105**, and maintain this bond during the housing molding process. In one arrangement, the adhesive **260** can be sprayed onto the plastic film **255**, dispensed onto the plastic film **255**, or applied to the plastic film **255** in another suitable manner. The adhesive **260** can be applied to the plastic film **255** before, after, or when the plastic film **255** is die cut. In another arrangement, the adhesive **260** can be an adhesive film or transfer tape attached to the plastic film **255**. The adhesive film or transfer tape can be die cut with the plastic film **255** after being applied to the plastic film **255**, or first can be die cut and then applied to the die cut plastic film **255**. Further, the adhesive **260** can be a pressure sensitive adhesive, adhering the plastic film **255** to the display screen **105** when pressure is applied to mate the adhesion member **220** to the display screen **105**. Examples of adhesive tape that can be used as the adhesive **260** include, but are not limited to, Model Nos. 57120B, 57120SB, 57320B and 57320SB available from Nitto Denko Corporation of Osaka, Japan.

The plastic film **255** can be a polycarbonate film selected to at least partially melt at the temperature used to mold the housing **110** from the plastic resin, for example between 150° C. and 350° C., thus bonding the plastic film **255** to the plastic resin when the plastic film **255** and plastic resin cool to a temperature sufficiently low enough for the plastic resin to harden and form the housing **110**, for example below 125° C. By virtue of the plastic film **255** bonding to the housing **110** and the adhesive **260** bonding the plastic film **255** to the display screen **105**, the adhesion member **220** secures the display screen **105** to the housing **110**. Further, use of the plastic film **255** enables survival of the adhesive **260** during the molding process. Specifically, the plastic film **255** can provide a measure of thermal insulation between the plastic resin and the adhesive **260**, thus limiting exposure of the adhesive **260** to high temperatures resulting from the molding process.

FIG. **3** depicts a housing mold **300**, which is useful for understanding various arrangements described herein. The housing mold **300** can be configured to form the housing **110** of the electronic device **100** (shown in FIG. **1**) from plastic resin, for example model no. UT-5025 resin available from Bayer MaterialScience of Pittsburgh, Pa. In another arrangement, the housing **110** can be formed from grade EXL1414 Lexan™ resin or grade EXL4019 Lexan™ resin, both available from Sabic Innovative Plastic Products of Pittsfield, Mass.

The mold **300** can comprise a first mold member **305** and a second mold member **310** configured to mate together, defining a cavity **315** to receive the plastic resin in an injection molding process. The cavity **315** and various features **320**, **325**, **330** can be configured in the mold to define the shape of the housing of the electronic device.

Prior to mating the first and second mold members **305**, **310**, the display screen **105**, the side of the adhesion member **220** where the adhesive **260** is applied can be connected to the peripheral region **200** of the display screen **105**, and the display screen **105** can be inserted into the housing mold **300**. The housing mold **300** can include tabs **335**, or other suitable features, to hold the display screen **105** into the proper position within the cavity **315** during the molding process. When the display screen **105** is in place, the first and second mold members **305**, **310** can be mated, and plastic resin can be injected into the cavity **315** to form the housing. For example, the plastic resin can be injected through a duct **340** provided in the mold **300** that connects to the cavity **315**.

Prior to being injected into the housing mold **300**, the plastic resin can be heated to a temperature suitable to melt the plastic resin and enable the plastic resin to flow through the duct **340** into the cavity **315** and fill the cavity **315**. For example, the plastic resin can be heated to a temperature between 150° C. and 350° C. The plastic resin can be allowed to cool and solidify to form the plastic housing before unmating the mold members **305**, **310** to remove the housing. At this point, the display screen **105** now connected to the housing via the adhesion member **220**. Specifically, during the molding process, the plastic film (**255** of FIG. **2**) of the adhesion member **220** can bond to the injected plastic, securing the display screen **105** to the housing.

FIG. **4** depicts an enlarged section view of the electronic device FIG. **1**, taken along section line **4-4**, in accordance with one arrangement described herein. In FIG. **4**, the display screen **105** has been connected to the housing **110** during a molding process, such as the molding process described with respect to FIG. **3**. The portion **215** of the display screen **105** can fit into the aperture **115** of the housing **110**. The peripheral region **200** of the display screen **105** can be bonded to an inner side **400** of the housing **110** via the adhesion member **220**. Specifically, the plastic film **255** can be bonded to the side **400** of the housing **110**, and the adhesive **260** can be adhered to the peripheral region **200** of the display screen **105**.

Notably, in contrast to glue that typically is used to attach a display screen to a housing, the adhesion member **220** will not spread outside of the peripheral region **200** of the display screen **105**. Glue, however, will sometimes spreads (or wash out) through a small gap between an aperture in the housing and the display screen, becoming externally visible on the electronic device. Glue also sometimes spreads into other places within an electronic device where it is not supposed to be. The present arrangements overcome these issues.

FIG. **5** is a flowchart presenting a method of molding a display screen into a housing of electronic device, which is useful for understanding various arrangements described herein. At step **505**, an adhesive can be applied a first side of a plastic film to form an adhesion member, the plastic film comprising the first side and a second side opposite of the first side. At step **510**, the adhesion member can be connected to a display screen, the adhesive bonding the plastic film to a peripheral region of the display screen. At step **515**, the display screen with the connected adhesion member can be inserted into a housing mold. At step **520**, plastic resin can be injected into the housing mold to form the housing of the electronic device, the plastic film bonding with the injected plastic resin to bond the plastic film to the housing and securing the display screen into the housing.

Like numbers have been used to refer to the same items throughout this specification. The terminology used herein is for the purpose of describing particular embodiments only and is not intended to be limiting of the invention. The terms "a" and "an," as used herein, are defined as one or more than one. The term "plurality," as used herein, is defined as two or more than two. The term "another," as used herein, is defined as at least a second or more. The term "and/or" as used herein refers to and encompasses any and all possible combinations of one or more of the associated listed items. It will also be understood that, although the terms first, second, etc. may be

used herein to describe various elements, these elements should not be limited by these terms, as these terms are only used to distinguish one element from another unless stated otherwise or the context indicates otherwise.

Reference throughout this specification to "one arrangement," "an arrangement," or similar language means that a particular feature, structure, or characteristic described in connection with the embodiment is included in at least one arrangement disclosed within this specification. Thus, appearances of the phrases "in one arrangement," "in an arrangement," and similar language throughout this specification may, but do not necessarily, all refer to the same arrangement.

The term "if" may be construed to mean "when" or "upon" or "in response to determining" or "in response to detecting," depending on the context. Similarly, the phrase "if it is determined" or "if [a stated condition or event] is detected" may be construed to mean "upon determining" or "in response to determining" or "upon detecting [the stated condition or event]" or "in response to detecting [the stated condition or event]," depending on the context.

The corresponding structures, materials, acts, and equivalents of all means or step plus function elements in the claims below are intended to include any structure, material, or act for performing the function in combination with other claimed elements as specifically claimed. The description of the embodiments disclosed within this specification have been presented for purposes of illustration and description, but are not intended to be exhaustive or limited to the form disclosed. Many modifications and variations will be apparent to those of ordinary skill in the art without departing from the scope and spirit of the embodiments of the invention. The embodiments were chosen and described in order to best explain the principles of the invention and the practical application, and to enable others of ordinary skill in the art to understand the inventive arrangements for various embodiments with various modifications as are suited to the particular use contemplated.

These embodiments can be embodied in other forms without departing from the spirit or essential attributes thereof. Accordingly, reference should be made to the following claims, rather than to the foregoing specification, as indicating the scope of the embodiments.

What is claimed is:

1. A method of molding a display screen into a housing of an electronic device, the method comprising:

applying an adhesive to a first side of a plastic film to form an adhesion member, the plastic film comprising the first side and a second side opposite of the first side;

connecting the adhesion member to the display screen, the adhesive bonding the plastic film to a peripheral region of the display screen;

inserting the display screen with the connected adhesion member into a housing mold; and

injecting plastic resin into the housing mold to form the housing, the plastic film bonding with the injected plastic resin to bond the plastic film to the housing and securing the display screen into the housing.

2. The method of claim **1**, further comprising:

die cutting the adhesion member to a shape that conforms to the peripheral region of the display screen after the adhesive is applied to the first side of the plastic film.

3. The method of claim **1**, further comprising:

die cutting the plastic film to a shape that conforms to the peripheral region of the display screen;

wherein applying an adhesive to the first side of the plastic film to form the adhesion member comprises applying the adhesive to the first side of the die cut plastic film.

4. The method of claim **3**, further comprising:

die cutting the adhesive to the shape that conforms to the peripheral region of the display screen.

5. The method of claim **1**, wherein applying the adhesive to the first side of the plastic film to form the adhesion member comprises spraying the adhesive onto the first side of the plastic film.

6. The method of claim **1**, wherein applying the adhesive to the first side of the plastic film to form the adhesion member comprises dispensing the adhesive onto the first side of the plastic film.

7. The method of claim **1**, wherein the plastic film is a polycarbonate film.

8. The method of claim **1**, wherein:

injecting the plastic resin into the housing mold comprises injecting the plastic resin at a temperature between 150° C. and 350° C.; and

the plastic film at least partially melts at the temperature between 150° C. and 350° C., creating a bond between the plastic film and the housing when the plastic film and plastic resin cool to a temperature where the plastic resin is hardened to form the housing.

9. An electronic device, comprising:

a device housing;

an adhesion member comprising:

a plastic film comprising a first side and a second side opposite of the first side; and

an adhesive applied to the first side of the plastic film;

a display screen molded into an aperture of the device housing during a plastic injection molding process forming the device housing from plastic resin injected into a housing mold, the adhesive applied to the first side of the plastic film bonding the plastic film to a peripheral region of the display screen, and the plastic film bonding with the injected plastic resin to bond the plastic film to the device housing and secure the display screen into the device housing.

10. The electronic device of claim **9**, wherein the adhesion member is die cut to a shape that conforms to the peripheral region of the display screen after the adhesive is applied to the first side of the plastic film.

11. The electronic device of claim **9**, wherein the plastic film is die cut to a shape that conforms to the peripheral region of the display screen, and the adhesive is applied to the first side of the die cut plastic film.

12. The electronic device of claim **11**, wherein the adhesive is die cut to the shape that conforms to the peripheral region of the display screen.

13. The electronic device of claim **9**, wherein the adhesive is sprayed onto the first side of the plastic film.

14. The electronic device of claim **9**, wherein the adhesive is dispensed onto the first side of the plastic film.

15. The electronic device of claim **9**, wherein the plastic film is a polycarbonate film.

16. The electronic device of claim **9**, wherein:

the plastic resin is injected into the housing mold at a temperature between 150° C. and 350° C.; and

the plastic film at least partially melts at the temperature between 150° C. and 350° C., creating a bond between the plastic film and the device housing when the plastic film and plastic resin cool to a temperature where the plastic resin is hardened to form the device housing.

* * * * *