US009075452B2

(12) **United States Patent**
Craft

(10) **Patent No.: US 9,075,452 B2**
(45) **Date of Patent: Jul. 7, 2015**

(54) **OPTICAL DIGITIZER SYSTEM WITH POSITION-UNIQUE PHOTOLUMINESCENT INDICIA**

(71) Applicant: **3M INNOVATIVE PROPERTIES COMPANY**, St. Paul, MN (US)

(72) Inventor: **Stephen J. Craft**, Haverhil, MA (US)

(73) Assignee: **3M Innovative Properties Company**, St. Paul, MN (US)

(*) Notice: Subject to any disclaimer, the term of this patent is extended or adjusted under 35 U.S.C. 154(b) by 0 days.

(21) Appl. No.: **14/178,703**

(22) Filed: **Feb. 12, 2014**

(65) **Prior Publication Data**

US 2014/0160080 A1 Jun. 12, 2014

Related U.S. Application Data

(63) Continuation of application No. 13/713,052, filed on Dec. 13, 2012.

(60) Provisional application No. 61/719,704, filed on Oct. 29, 2012.

(51) **Int. Cl.**

G01J 5/02	(2006.01)
G06F 3/03	(2006.01)
C09K 11/00	(2006.01)
G01C 21/20	(2006.01)

(52) **U.S. Cl.**

CPC ***G06F 3/0321*** (2013.01); ***C09K 11/00*** (2013.01); ***G01C 21/20*** (2013.01); ***G06F 3/0317*** (2013.01)

(58) **Field of Classification Search**

CPC G01J 3/0272; G06K 9/2054

USPC 250/458.1

See application file for complete search history.

(56) **References Cited**

U.S. PATENT DOCUMENTS

3,971,065	A	7/1976	Bayer	
4,320,292	A	3/1982	Oikawa et al.	
4,794,634	A	12/1988	Torihata	
4,851,681	A *	7/1989	DePauli	250/338.1
5,051,763	A	9/1991	Yukevich, Jr.	
5,442,147	A	8/1995	Burns	
5,477,012	A	12/1995	Sekendur	
5,552,147	A	9/1996	Znaiden	
5,554,828	A	9/1996	Primm	
5,675,129	A	10/1997	Burns	

(Continued)

FOREIGN PATENT DOCUMENTS

CA	2 499 917	4/2004
EP	0 110 579	6/1984

(Continued)

OTHER PUBLICATIONS

PCT International Search Report for PCT/US2013/065583 mailed on Feb. 24, 2014, 4 pages.

(Continued)

Primary Examiner — Kiho Kim

(74) *Attorney, Agent, or Firm* — Robert S. Moshrefzadeh

(57) **ABSTRACT**

A digitizer system includes a substrate with indicia having photoluminescent features that uniquely define local areas of the substrate. A sensor device, such as a stylus, may sense radiation emitted from the features, and a controller may determine therefrom the location of the stylus relative to the substrate.

11 Claims, 11 Drawing Sheets

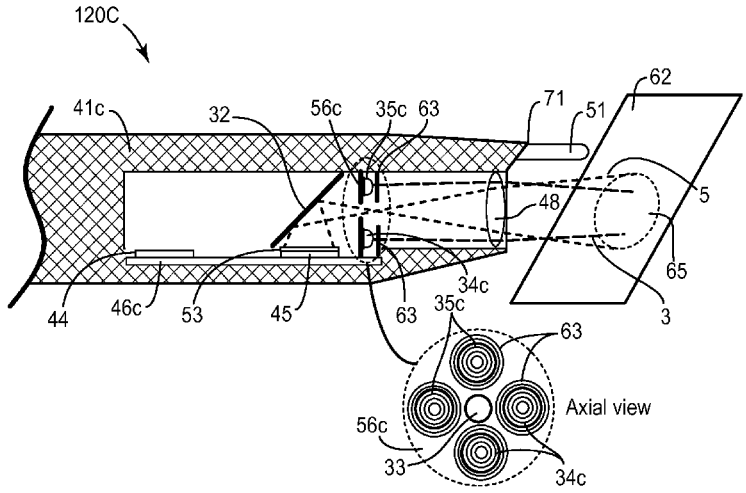

(56) **References Cited**

U.S. PATENT DOCUMENTS

5,679,959	A	10/1997	Nagase	
5,754,514	A *	5/1998	Guerra	369/116
5,852,434	A	12/1998	Sekendur	
6,050,490	A	4/2000	Leichner	
6,432,518	B1	8/2002	Torii et al.	
6,502,756	B1	1/2003	Fahraeus	
6,548,768	B1	4/2003	Pettersson	
6,570,104	B1	5/2003	Ericson	
6,586,688	B2	7/2003	Wiebe	
6,663,008	B1	12/2003	Pettersson	
6,666,376	B1	12/2003	Ericson	
6,667,695	B2	12/2003	Pettersson	
6,689,966	B2	2/2004	Wiebe	
6,722,574	B2	4/2004	Skantze	
6,734,960	B1 *	5/2004	Goto et al.	356/237.1
6,927,916	B2	8/2005	Craven-Bartle	
6,962,450	B2	11/2005	Brouhon	
6,965,377	B2	11/2005	Yanagisawa	
7,262,764	B2	8/2007	Wang	
7,328,851	B1	2/2008	Iftime et al.	
7,330,605	B2	2/2008	Wang	
7,403,658	B2	7/2008	Lin	
7,528,848	B2	5/2009	Xu	
7,529,410	B2	5/2009	Wang	
7,553,537	B2	6/2009	Burns	
7,570,813	B2	8/2009	Wang	
7,580,576	B2	8/2009	Wang	
7,619,607	B2	11/2009	Zhang	
7,622,182	B2	11/2009	Wang	
7,646,377	B2	1/2010	Geaghan	
7,756,364	B2	7/2010	Slatter	
7,898,505	B2	3/2011	Blythe	
8,044,577	B2 *	10/2011	Hwang et al.	313/506
2002/0005493	A1 *	1/2002	Reese et al.	250/459.1
2002/0163511	A1	11/2002	Sekendur	
2003/0197690	A1	10/2003	Zimenkov	
2004/0085302	A1	5/2004	Wang	
2004/0086181	A1	5/2004	Wang	
2004/0252867	A1	12/2004	Lan et al.	
2005/0087675	A1 *	4/2005	Ayres	250/214 R
2005/0162400	A1	7/2005	Tseng	
2005/0195412	A1 *	9/2005	Opsal	356/630
2005/0201621	A1	9/2005	Wang	
2006/0022963	A1	2/2006	Bosch	
2006/0128087	A1 *	6/2006	Bamji et al.	438/199
2006/0139338	A1	6/2006	Robrecht	
2006/0221022	A1	10/2006	Hajjar	
2006/0232569	A1	10/2006	Lin	
2007/0070053	A1 *	3/2007	Lapstun et al.	345/179
2007/0097101	A1	5/2007	Hunter	
2008/0006762	A1 *	1/2008	Fadell et al.	250/201.1
2008/0018619	A1	1/2008	Slatter	
2008/0203279	A1	8/2008	Kobashi	
2008/0245964	A1 *	10/2008	Miles et al.	250/288
2008/0246388	A1	10/2008	Cheon	
2009/0002688	A1 *	1/2009	Soeda et al.	356/73
2009/0017268	A1	1/2009	Skipor	
2009/0128520	A1	5/2009	Combe	
2010/0001962	A1 *	1/2010	Doray et al.	345/173
2010/0001963	A1	1/2010	Doray	
2010/0085471	A1	4/2010	Craven-Bartle	
2010/0116564	A1 *	5/2010	Silverbrook et al.	178/19.01
2010/0328272	A1	12/2010	Craven-Bartle	
2011/0115750	A1	5/2011	Ebner	
2011/0141150	A1	6/2011	Hajjar	
2012/0162145	A1	6/2012	Knee	
2012/0206420	A1 *	8/2012	Shieh	345/179
2013/0300703	A1	11/2013	Sjögren et al.	

FOREIGN PATENT DOCUMENTS

EP	0 670 555	9/1995
WO	WO 01/01670	1/2001
WO	WO 01/26032	4/2001
WO	WO 02/13126	2/2002
WO	WO 02/058029	7/2002
WO	WO 2005/010823	2/2005
WO	WO 2006/104291	10/2006

OTHER PUBLICATIONS

U.S. Appl. No. 13/545,066—Digitizer for Multi-Display System, filed Jul. 10, 2012.

Bakueva et al., "PbS Quantum Dots With Stable Efficient Luminescence in the Near-IR Spectral Range", Advanced Materials, 2004, vol. 16, No. 11, Jun. 4, 2004, pp. 926-929.

Dorokhin et al., "*Fabrication and Luminescence of Designer Surface Patterns with β-Cyclodextrin Functionalized Quantum Dots via Multivalent Supramolecular Coupling*", Institute of Materials Research and Engineering, Agency for Science, Technology and Research, American Chemical Society Nano, 2010, vol. 4(1), pp. 137-142.

Grund Jr. et al., "Quantum Dot Composite Light Sources", Proceedings vol. 7953, Novel In-Plane Semiconductor Lasers X, edited by Alexey A. Belyanin, Peter M. Smowton, 7950302, Feb. 16, 2011, 5 pages.

Hampton et al.; "Direct Patterning of CdSe Quantum Dots into Sub-100 nm Structures", Langmuir Letter, 2010, 26(5), pp. 3012-3015.

Mukhametzhanov et al.; "Room Temperature Electroluminescence at 1.3μm From Strained InAs/GaAs Quantum Dots", Photonic Materials and Devices Laboratory, Departments of Materials Science and Physics, university of Southern California, Los Angeles, California 90089-0241, Issue Date: 1999, Meeting Date: Nov. 8, 1999-Nov. 11, 1999. vol. 1, pp. 305-306.

Panzer et al.; "Tunable Infrared Emission From Printed Colloidal Quantum Dot/Polymer Composite Films on Flexible Substrates", Journal of Display Technology, vol. 6, No. 3, Mar. 2010, pp. 90-93.

Pietryga et al.; "Pushing The Bank Gap Envelope: Mid-Infrared Emitting Colloidal PbSe Quantum Dots", Journal of American Chemical Society, vol. 126, No. 38, 2004, pp. 11752-11753.

Sargent E. H.,; "Infrared Quantum Dots", Advanced Materials, vol. 17, No. 5, Mar. 8, 2005, pp. 515-522.

Singh et al.; "Inkjet Printing—Process and Its Applications", Advanced Materials, vol. 22, 2010, pp. 673-685.

Small, A.C.; Johnston, J. H., and Clark, N.; "*Inkjet Printing of Water "Soluble" Doped ZnS Quantum Dots*", European Journal of Inorganic Chemistry, 2010; pp. 242-247.

Quantum-Dot Displays: Dotting The Eyes, The Economist, How Tiny Crystals Can Improve Picture Quality, Jun. 16, 2011—from the print edition, Printed. Jan. 11, 2013. http://www.economist.com/node/18833511/print, 3 pages.

* cited by examiner

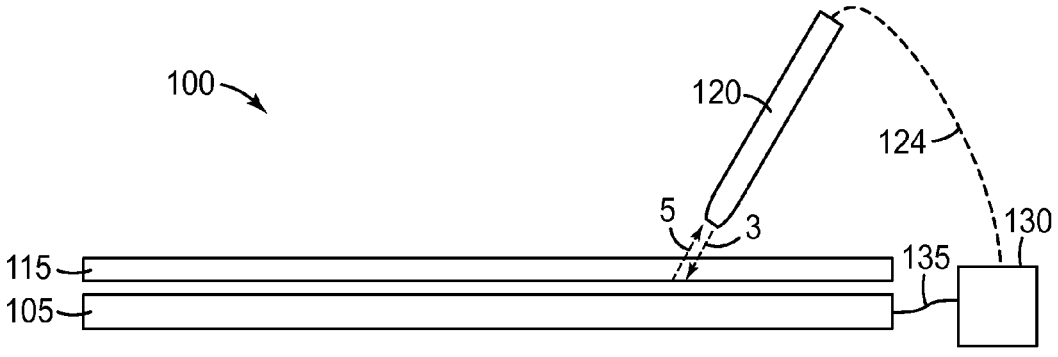

FIG. 1A

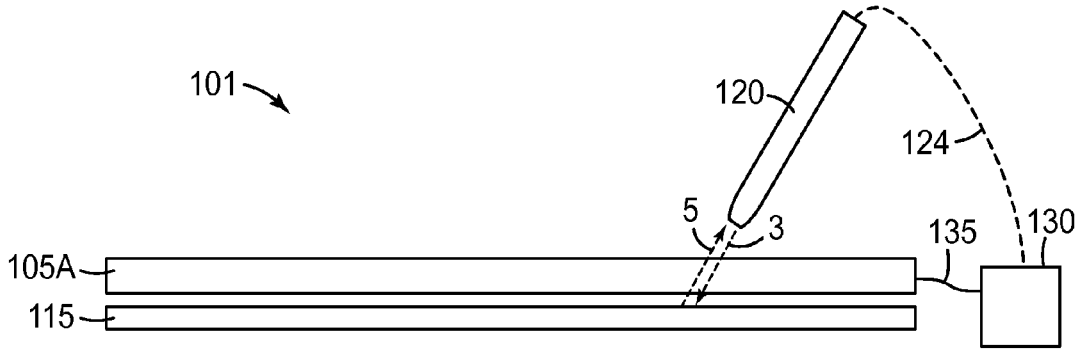

FIG. 1B

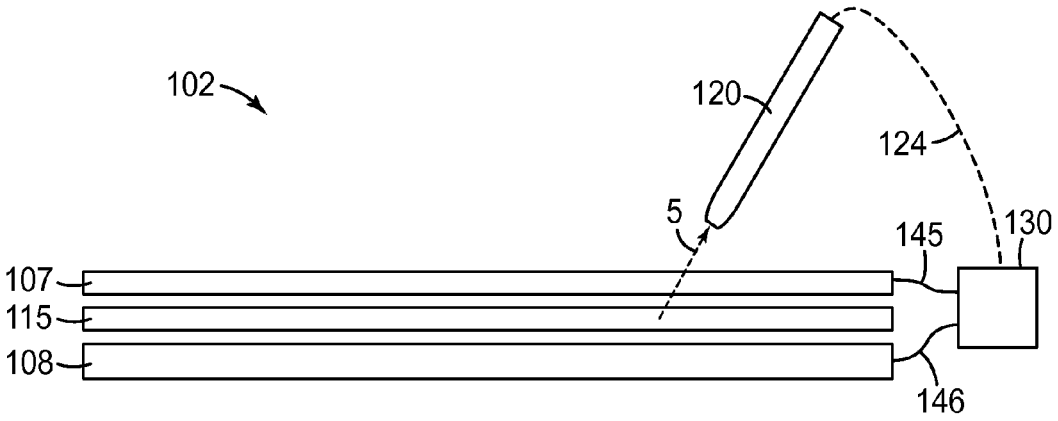

FIG. 1C

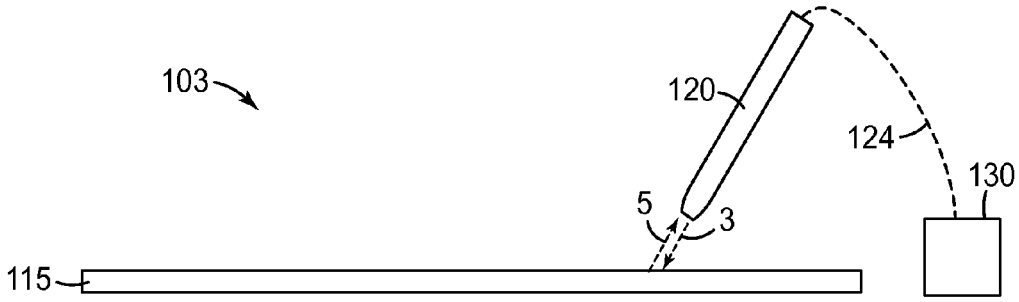

FIG. 1D

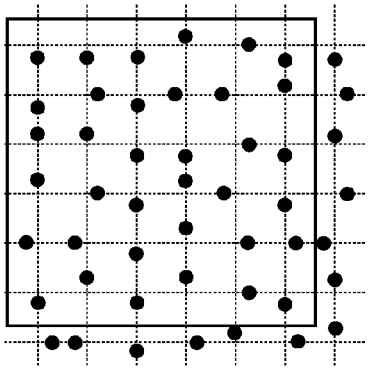

FIG. 2a
Prior Art

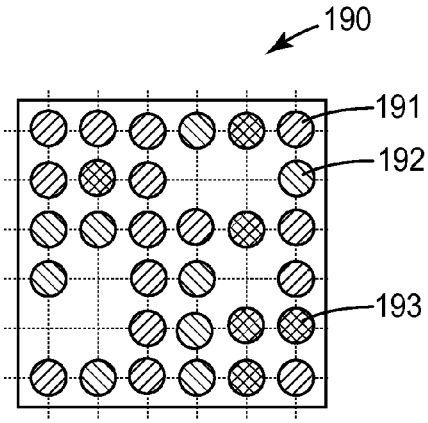

FIG. 2b

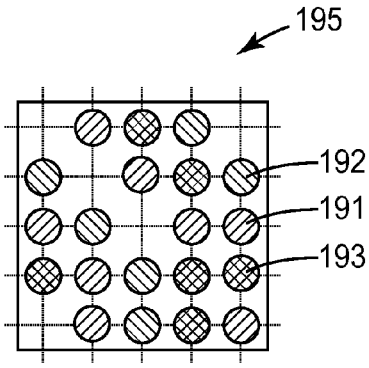

FIG. 2c

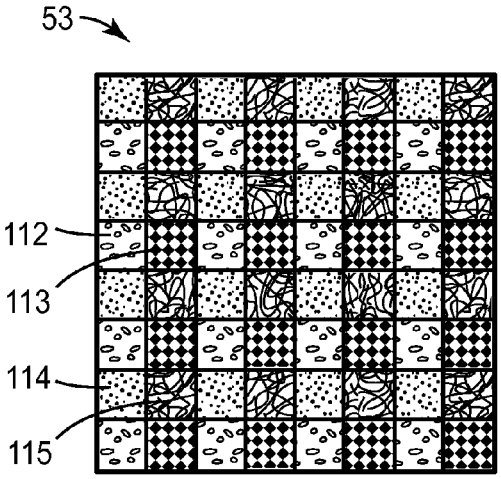

FIG. 2d

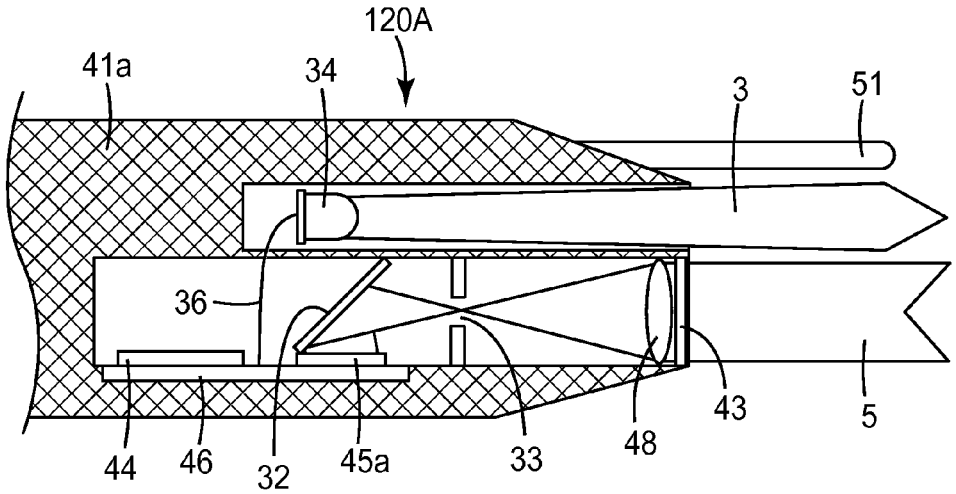
120A
41a
34
3
51
36
44
46
32
45a
33
48
43
5

FIG. 3A

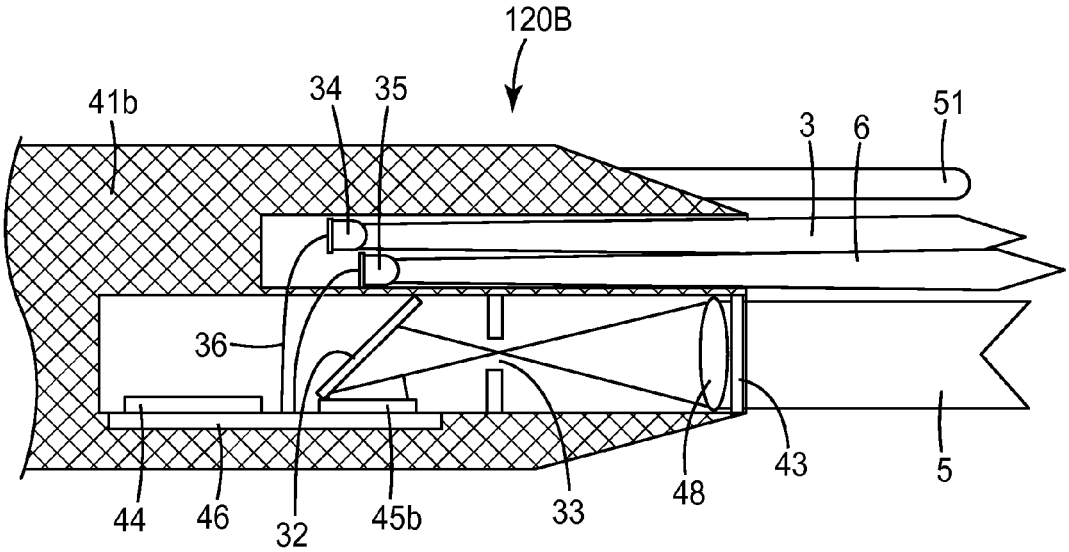
120B
41b
34
35
3
6
51
36
44
46
32
45b
33
48
43
5

FIG. 3B

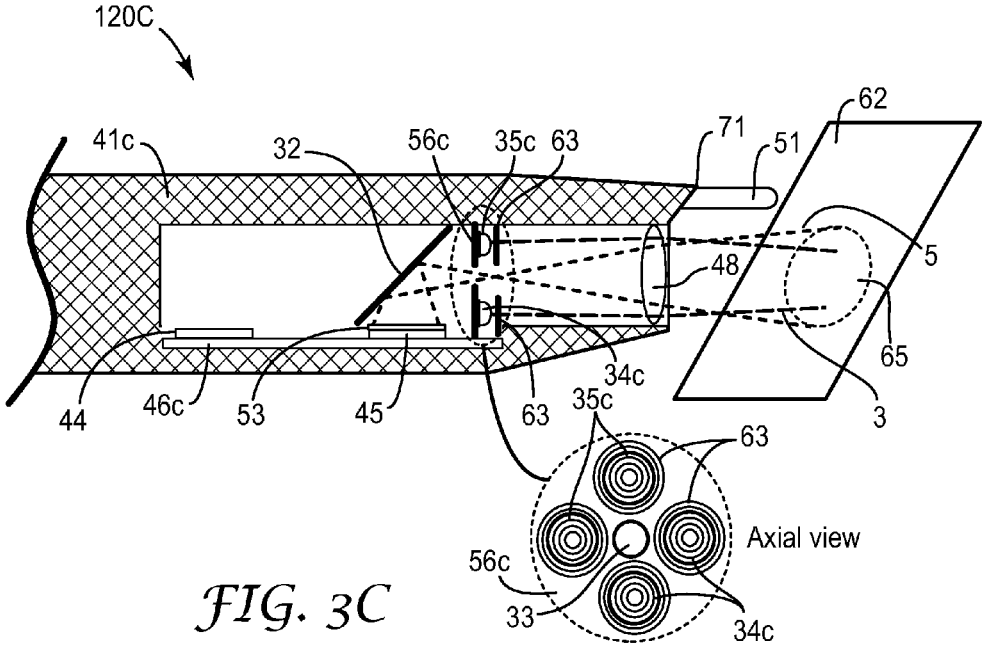
120C
41c
32
56c
35c
63
71
51
62
5
48
65
3
44
46c
53
45
63
34c
35c
63
Axial view
56c
33
34c

FIG. 3C

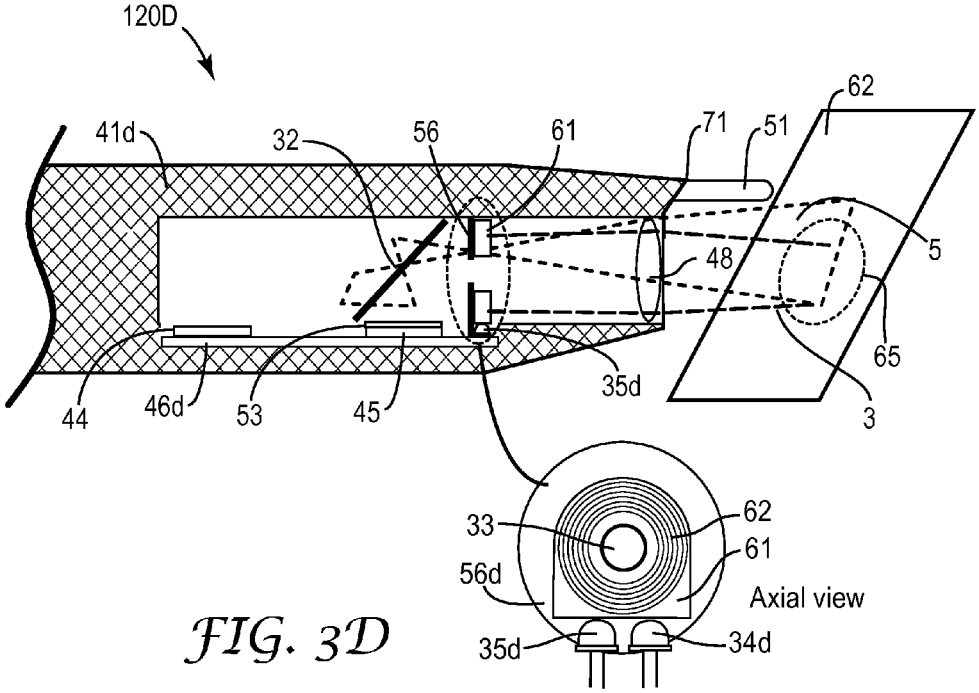
120D
41d
32
56
61
71
51
62
5
48
65
3
44
46d
53
45
35d
33
62
61
56d
Axial view
35d
34d

FIG. 3D

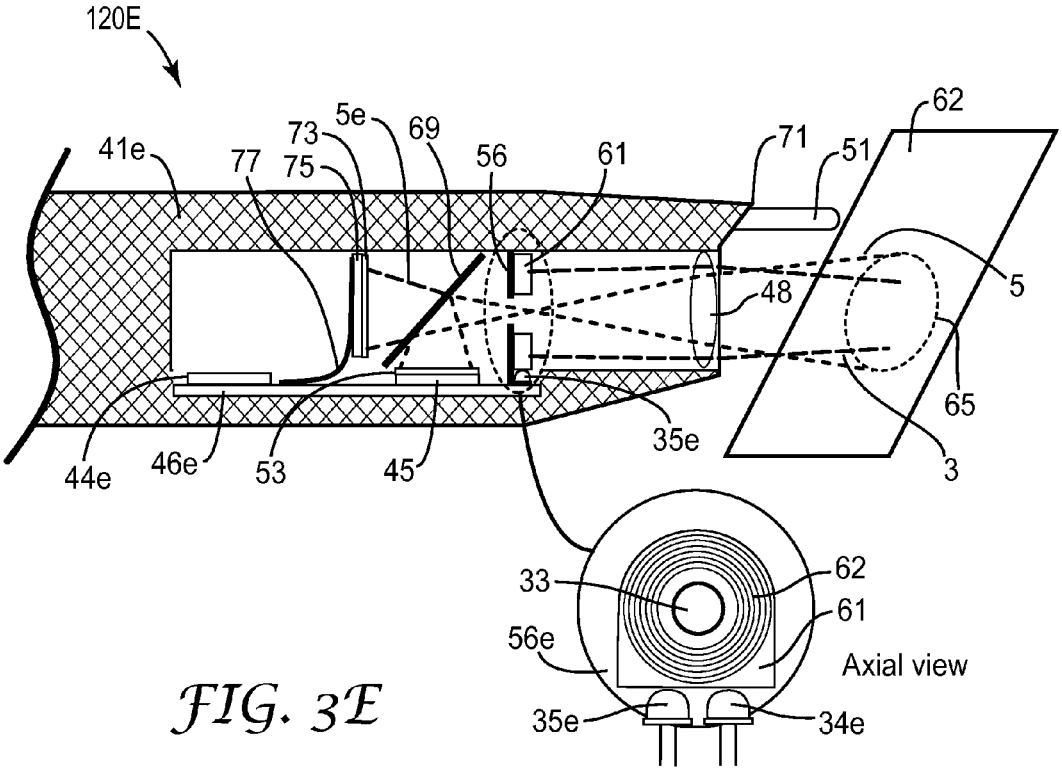
120E
41e
77
73
75
5e
69
56
61
71
51
62
5
48
65
3
35e
44e
46e
53
45
33
62
61
56e
Axial view
35e
34e

FIG. 3E

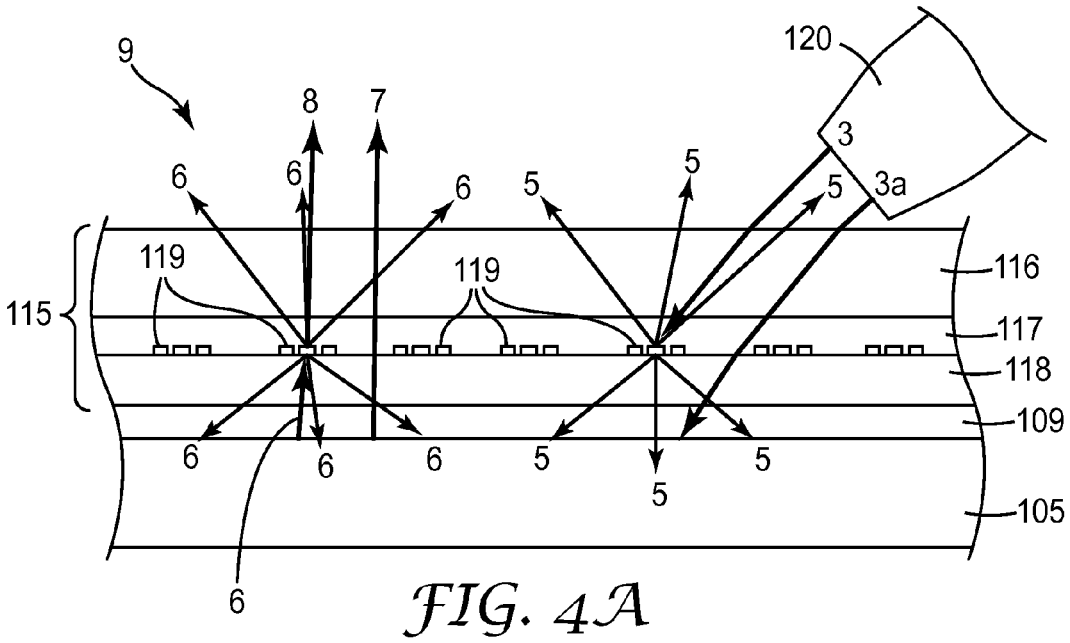
9
120
8
7
3
6
6
6
5
5
5
3a
119
119
116
115
117
118
109
6
6
6
5
5
5
105
6

FIG. 4A

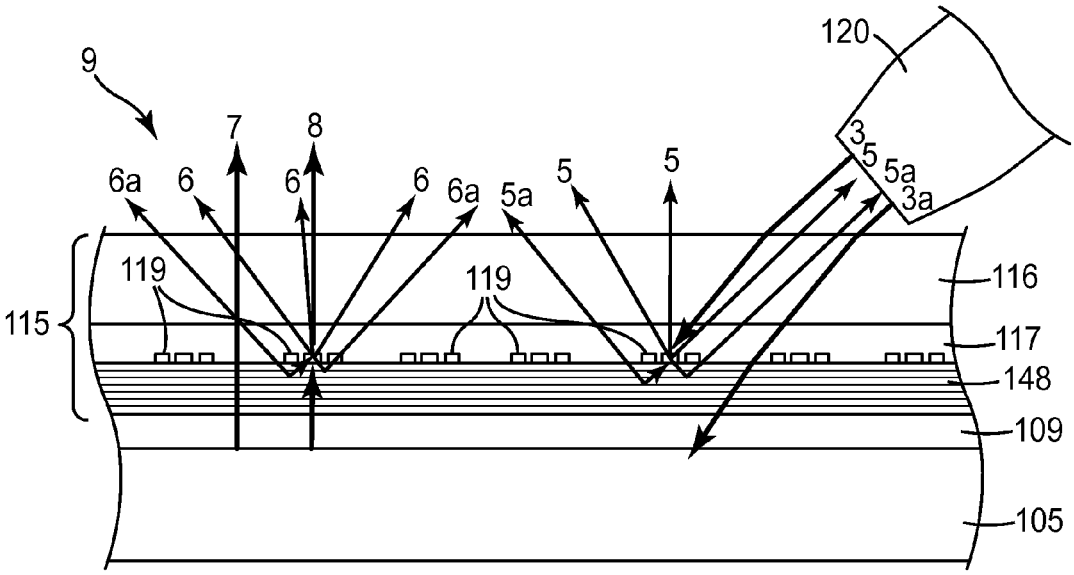
9
120
7
8
3
5
5a
3a
6a
6
6
6
6a
5a
5
5
119
119
116
115
117
148
109
105

FIG. 4B

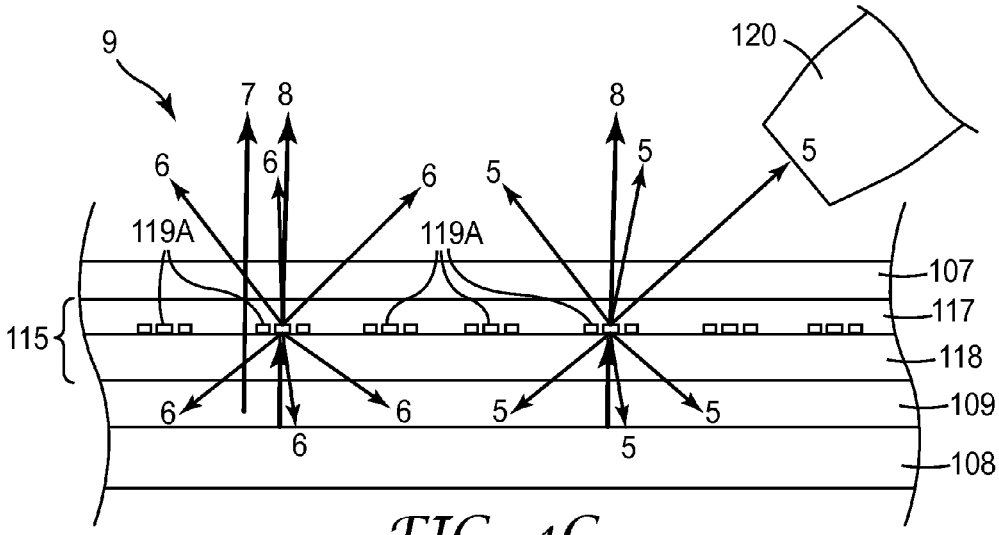
9
120
7
8
8
6
6
6
5
5
5
119A
119A
107
117
115
118
109
6
6
5
5
6
5
108

FIG. 4C

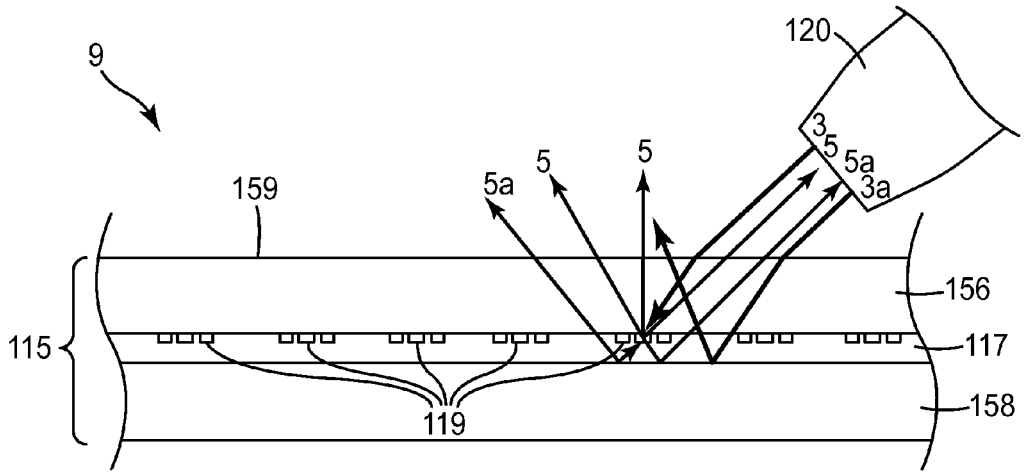
9
120
3
5
5a
3a
5
5
5a
159
156
115
117
158
119

FIG. 4D

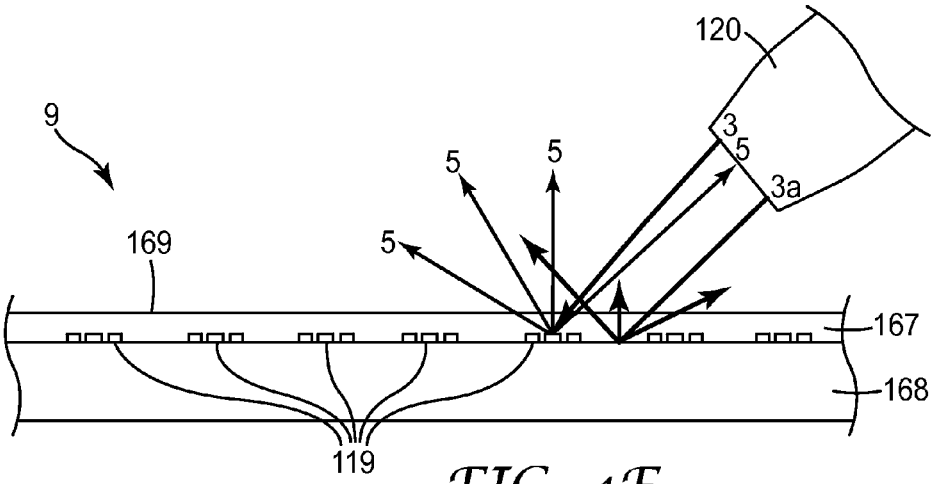

FIG. 4E

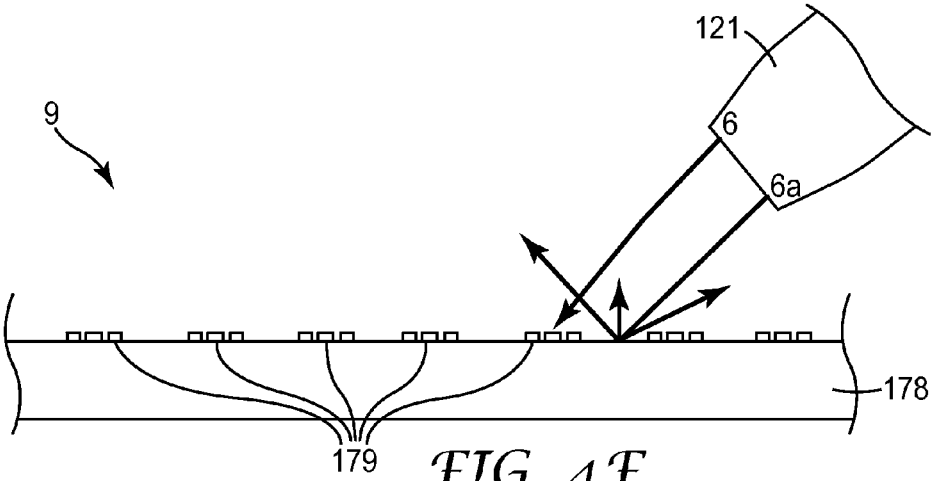

FIG. 4F

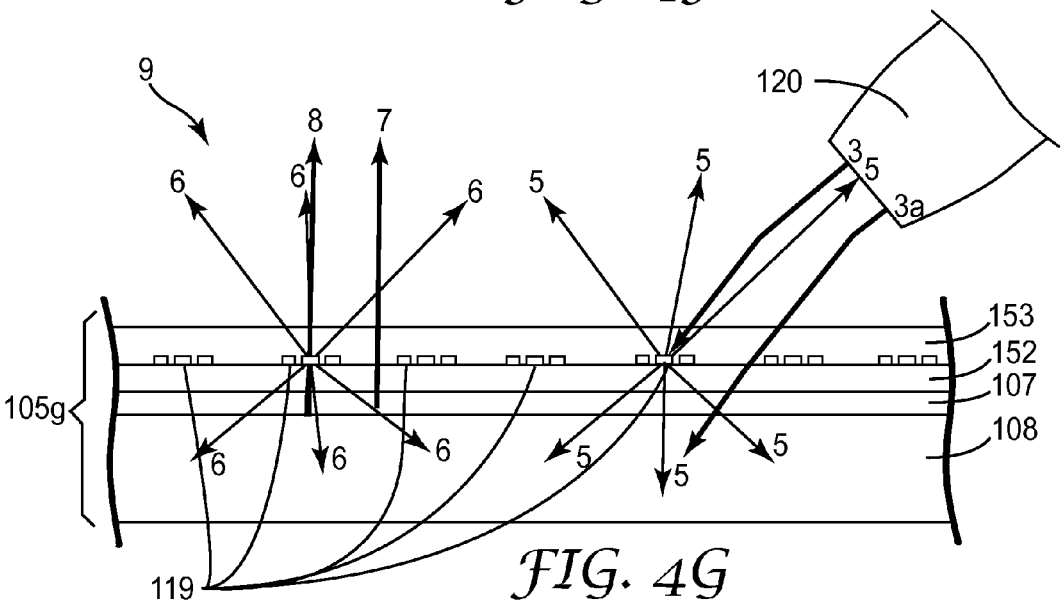

FIG. 4G

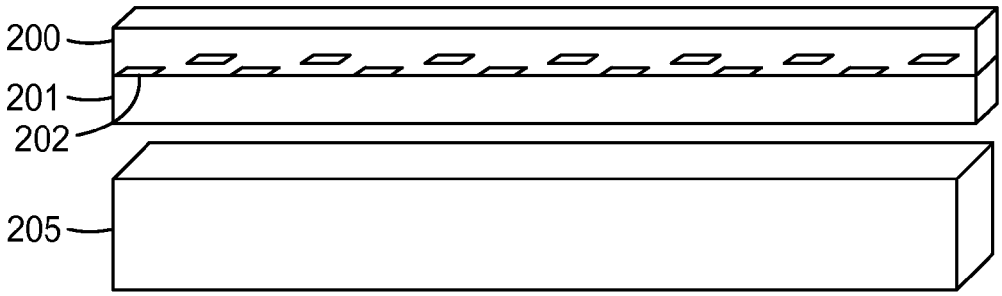

FIG. 5A

FIG. 5B

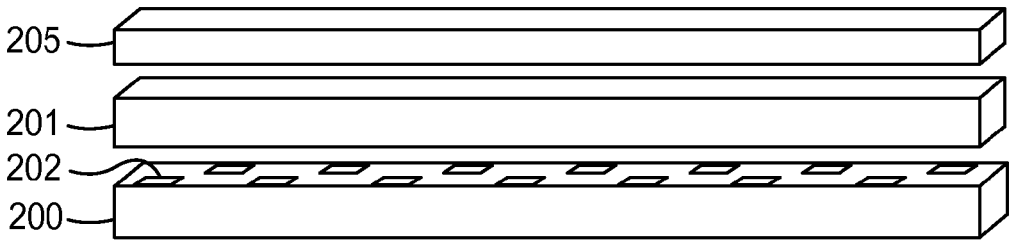

FIG. 5C

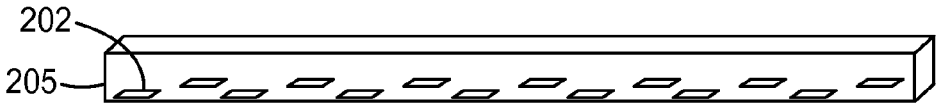

FIG. 5D

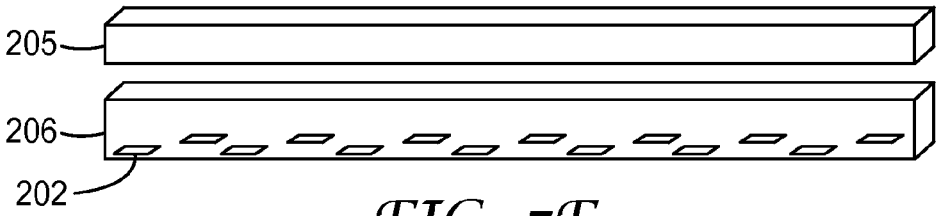

FIG. 5E

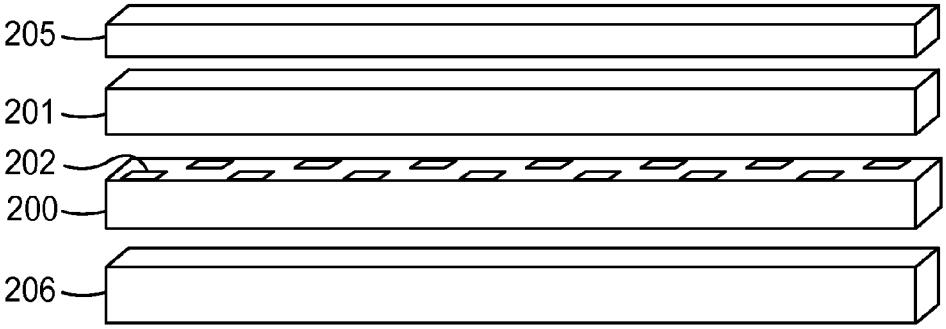

FIG. 5F

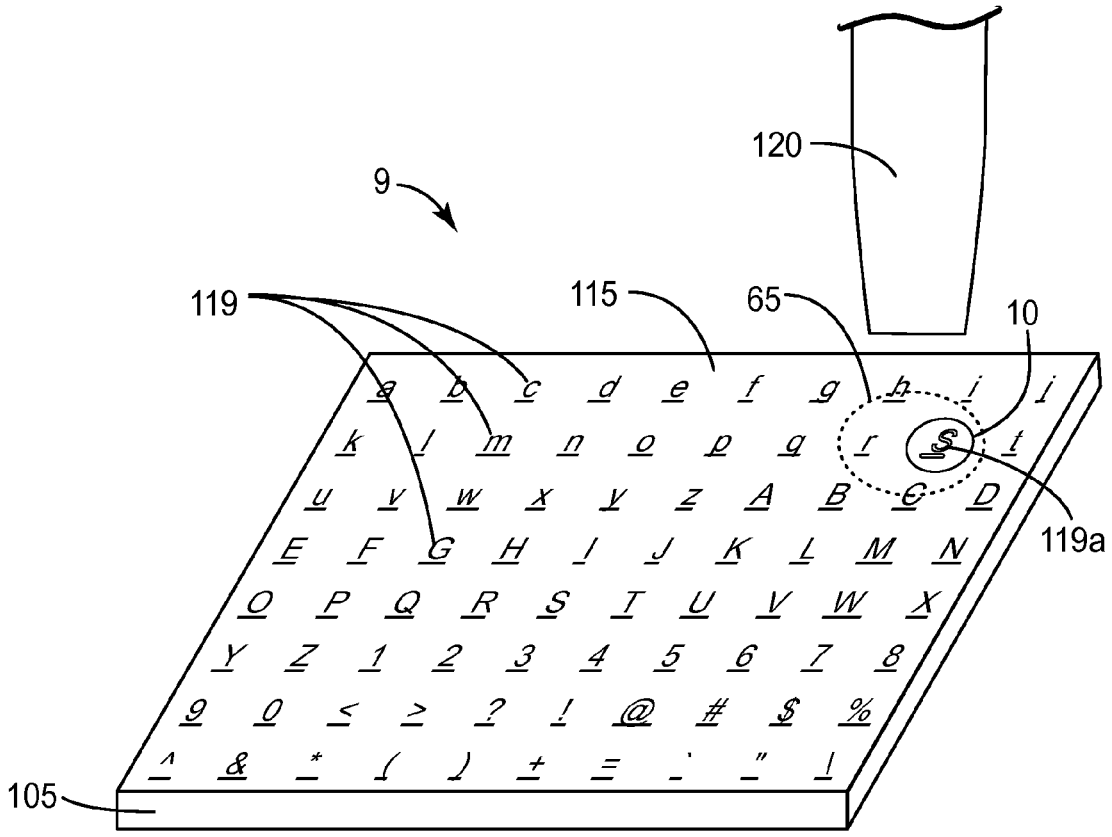

FIG. 6

OPTICAL DIGITIZER SYSTEM WITH POSITION-UNIQUE PHOTOLUMINESCENT INDICIA

BACKGROUND

Users are increasingly demanding functionalities beyond merely recognizing a touch to the surface of the touch-sensitive device. Such other functionalities include handwriting recognition and direct note taking (using, for example, a stylus). Such functionalities are generally provided in so-called digitizing systems.

Digitizing systems having position-dependent indicia detected by an image sensor in a stylus are commercially available. Anoto Group AB sells a stylus that detects indicia printed on an opaque paper or cardboard substrate. Reference is made to US Patent Publication No. 2010/0001962 (Doray), which describes a multi-touch display system that includes a touch panel having a location pattern included thereon.

SUMMARY

Photoluminescent indicia disposed on a substrate uniquely are patterned such that they uniquely identify local areas of the substrate. Some parts of the indicia pattern have features that fluoresce in different wavelengths, a feature that may be utilized to uniquely identify local areas of the substrate.

In one embodiment a digitizer system is disclosed, the digitizer system comprising a substrate with position-unique photoluminescent indicia comprising a pattern of features that emit a plurality of wavelength combinations, the wavelength combinations uniquely defining local regions of the substrate; a stylus comprising an optical image sensor configured to sense the photoluminescent indicia; and, a processor configured to receive signals from the optical image sensor and provide location-specific positional signals based on the received signals.

In another embodiment, a substrate is described, the substrate having position-unique photoluminescent indicia, the indicia comprising a pattern of features that fluoresce in a plurality of wavelength combinations, the wavelength combinations uniquely defining local regions of the substrate.

These and other embodiments are described further herein.

BRIEF SUMMARY OF DRAWINGS

Embodiments described herein may be more completely understood in consideration of the following detailed description in connection with the accompanying drawings, in which:

FIG. **1***a* shows a digitizer and display system.

FIG. **1***b* shows a further embodiment of a digitizer and display system.

FIG. **1***c* shows a further embodiment of a digitizer and display system.

FIG. **1***d* shows an embodiment of a digitizer absent a display system.

FIG. **2***a* shows a magnified drawing of a prior art position-unique indicia pattern.

FIG. **2***b* shows a magnified drawing of a 6×6 position-unique indicia pattern with a plurality of wavelength combinations.

FIG. **2***c* shows a magnified drawing of a 5×5 position-unique indicia pattern with a plurality of wavelength combinations.

FIG. **2***d* shows a filter that could be used conjunction with a position-unique indicia pattern with a plurality of wavelength combinations.

FIG. **3***a* shows a cross section of the end portion of a stylus.

FIG. **3***b* shows a cross section of the end portion of dual-source stylus.

FIG. **3***c* shows a cross section of the end portion of dual-source stylus with a coaxial optical path and light guide.

FIG. **3***d* shows a cross section of the end portion of dual-source stylus with a coaxial optical path, dichroic mirror, and two image sensors.

FIG. **3***e* shows a cross section of the end portion of a stylus similar the one shown in FIG. **3**D, with two image sensors having filters.

FIG. **4***a* shows a magnified cross section view of a portion of a digitizer and display system.

FIG. **4***b* shows a magnified cross section view of a portion of a digitizer and display system with a dichroic reflector.

FIG. **4***c* shows a magnified cross section view of a portion of a digitizer and display system.

FIG. **4***d* shows a magnified cross section view of a portion of a digitizer and display system.

FIG. **4***e* shows a magnified cross section view of a portion of a digitizer and display system with a minimal overlay.

FIG. **4***f* shows a magnified cross section view of a portion of a digitizer and display system with stylus operating in reflective mode.

FIG. **4***g* shows a magnified cross section view of a portion of a digitizer and display system with indicia printed on the color filter of a display.

FIG. **5***a* shows an exemplary product construction.

FIG. **5***b* shows an exemplary product construction.

FIG. **5***c* shows an exemplary product construction.

FIG. **5***d* shows an exemplary product construction.

FIG. **5***e* shows an exemplary product construction.

FIG. **5***f* shows an exemplary product construction.

FIG. **6** shows an indicia-printed overlay on a display with a calibration indicium illuminated on the display.

In the figures, like reference numerals designate like elements, unless otherwise described.

DETAILED DESCRIPTION OF ILLUSTRATIVE EMBODIMENTS

A digitizer system is described herein that includes a substrate having photoluminescent indicia that uniquely define an X-Y area of the substrate, and a pen or stylus with optical sensor that sense the indicia and determine based on the sensed indicia the position of the stylus relative to the substrate.

One pattern of indicia suited to embodiments described herein has been developed by, and is available from, Anoto Company AB, of Sweden. Anoto provides companies the ability to print small, opaque dots on paper in a pattern that uniquely defines each location on the paper. A stylus, that they also provide, is then used to sense portions of the pattern passing within the stylus field-of-view (FOV). The sensed pattern is then analyzed and the position of the stylus relative to the paper is computed.

Such analysis may comprise subjecting the sensed pattern to an image recognition algorithm whereby the sensed image is analyzed with a mathematical function that defines shapes or patterns, and/or with compared against a library of indicia. Within such a library are definitions of a large number of supported indicia and an indicator of the relative location of each indicium relative to other indicia. Identifying one indicium provides an indication of location on the surface of a

digitizer. If digitizer locations have been predetermined relative to display coordinates, then indicia can be used to indirectly reference display coordinates. Identification of orientation (for example the rotation) of indicia relative to a stylus may also provide information about the orientation of the stylus.

As described further herein, the use of photoluminescent indicia, in some embodiments, allows for the substrate and the indicia to be highly light transmissive to human visible light, even to the point of being nearly transparent, such that it is well suited for use as a transparent overlay to be put on or incorporated into a display. Photoluminescent indicia could also be used on non-light-transmissive substrates, including opaque substrates (such as whiteboards or paper). A multi-wavelength pattern is also described herein.

Photoluminescent indicia also, in some embodiments, may improve the signal to noise ratio in a detection system. They may also provide improved handling of specular reflection from the substrate. In some embodiments, radiation from the excitation source can be reduced or eliminated at the detector by the use of an optical filter, thereby improving the detection of the photoluminescent qualities of the indicia. In particular, since photoluminescent indicia, in some embodiments, upon receiving excitation electromagnetic illumination (or radiation—the terms are used interchangeably herein) in a first wavelength range (usually in the form of ultraviolet (UV), visible, or infrared (IR) illumination), the indicia luminesce providing emitted electromagnetic radiation in one or more wavelength ranges different than the excitation range.

In some embodiments, signals associated with the excitation radiation source can be filtered out, thereby increasing the signal-to-noise ratio in the light received by the sensor from the luminescent indicia. The material of the substrate itself may also be selected, in some embodiments, to improve signal-to-noise ratios. For example, in a photoluminescent indicia detection system, the substrate with the indicia could be placed on an absorbing material, a diffusing material, or a transparent material in order to minimize excitation radiation returning to the sensor.

The material comprising the photoluminescent indicia may be selected based on properties of the substrate, as will be described more fully later. In some embodiments, the material may comprise photoluminescent inks available in the marketplace, or quantum dots (QDs). The photoluminescent material is configured to exhibit photoluminescence; in one embodiment the luminescent emissions provided by the indicia is primarily in the infra-red (IR) light wavelengths, and the "stimulating" excitation illumination is primarily in wavelengths shorter than those associated with IR. There may be some overlap in the light wavelength ranges used to excite the indicia as compared with that provided by the emission of the material, but in some embodiments less overlap is desirable. The photoluminescent material may be transmissive or transparent to visible light, and may be disposed on a substrate that itself is transmissive or transparent to visible light.

In some embodiments, the digitizer system may be configured to operate in one of several modes. In one mode, the stylus illuminates a field of view with light in a first illumination wavelength range that excites the photoluminescent indicia, and images are detected by an image detector, or sensor, that is responsive to emission wavelengths in a second indicia wavelength range that is substantially different from the first illumination wavelength range. In a second mode, the stylus provides illumination in a wavelength range, and the stylus detects non-photoluminescent images in the same wavelength range as the stylus illumination. In a third mode, the stylus may detect indicia radiating light in a first indicia wavelength range from a visible light emitting display. In some embodiments, the stylus image sensor and stylus processor may sense two or more wavelength ranges and discriminate between images in each wavelength range.

FIG. **1***a* shows stylus digitizer system **100** comprising stylus **120**, display **105**, digitizer panel **115** patterned with photoluminescent indicia, and electronic controller **130** that controls displayed images via link **135**. Controller **130**, comprised of various microprocessors and circuitry, controls displayed images via link **135**, or it may be communicatively coupled to another display-specific controller that controls displayed images. Display controller **130** receives signals from stylus **120** associated with the position of stylus **120** relative to digitizer panel **115**. Controller **130** may also serve as the system processor for a computer system, for example a portable computing system. Though controller **130** is shown as one box in FIG. **1**, it may exist as discrete electronic sub-systems, for example, a first sub-system to interact with stylus **120**, and a second sub-system to interact with display **105**. Stylus **120** is communicatively coupled with controller **130** by link **124**. Link **124** may be a bundle of thin wires, but more preferably link **124** is a wireless radiofrequency (RF) link, and in such a construction stylus **120** and controller **130** include radios for back-and-forth communication, or, depending on implementation, one way communication. Such radios in one embodiment implement the Bluetooth™ communications protocol, or that defined by IEEE 802.11.

Another electronic subsystem could be configured to time the excitation source and the sensing unit (for example, stylus). For example, the excitation source could be pulsed (on/off) and the sensor capture timing set to correspond to the off state of the source. This configuration could be useful in some embodiments for indicia based on phosphorescent material or other photoluminescent material with a suitably long decay time.

In some embodiments, pulsed operation of the source/detection system would also mitigate motion induced artifacts in a moving stylus system. If the capture time were sufficiently short, the blurring of the indicia in the captured image would be minimal, possibly allowing for more accurate reading of the indicia. In addition, there may be a reduction in the rate of photoluminescent bleaching as compared to operation of the source in a continuous mode. Pulsed mode operation may also extend the operating time for battery powered stylus devices.

Stylus **120** has an optical image sensor that can detect patterns of light within its field of view (FOV). Stylus **120** detects light **5** emitted from photoluminescent indicia disposed on or within digitizer panel **115**. Stylus **120** may provide stimulating, or excitation, illumination in the form of excitation light **3** to illuminate indicia on digitizer panel **115**. In other embodiments, excitation illumination may come from sources other than those housed within the stylus (for example, LCD backlights and ambient light). Excitation light **3** may have a first wavelength range; indicia emitted light **5** (luminescence) has a second wavelength range. The first and second wavelength ranges in one embodiment do not overlap. In another embodiment the first and second wavelength ranges minimally overlap such that most of the excitation illumination energy is at different wavelengths than most of the indicia emitted energy. In another embodiment, the first and second wavelength ranges overlap. In yet another embodiment, emitted light **5** may be emitted from a visible display so no excitation light **3** may be required. In some embodiments, the second wavelength range of light **5** will comprise a plurality of wavelength combinations that may be discriminated from one another by the optical image sensor in

stylus **120**. In most cases where indicia are fluorescent or phosphorescent, the first illumination wavelength range will be at shorter wavelengths than the second indicia wavelength range. The breadth of the first and the second wavelength ranges will be based on the nature of the photoluminescent indicia. The first and/or the second wavelength ranges may be beyond those associated with human ocular sensing.

Display **105** may be any type display including but not limited to electronically addressable displays such as liquid crystal displays (LCD), active matrix LCD (AMLCD), organic light emitting diode displays (OLED), active matrix organic light emitting diode displays (AMOLED), electrophoretic display, a projection display, plasma displays, or a printed static image. Display **105** is, in some embodiments, optional, as the digitizer may be used in applications where digitizer panel **115** is opaque.

Digitizer panel **115** is in one embodiment a transparent substrate, such as glass, polyethylene terephthalate (PET), polyethylene naphthalate (PEN) cellulose triacetate (TAC), or any suitable material. It may be fully light transmissive, partially light transmissive, or opaque. Preferably, it is highly light transmissive so as to allow a person to see the output of display **105**. Digitizer panel **115** may be one layer or may be comprised of multiple layers of various materials. Digitizer panel **115** includes, disposed upon or within it, photoluminescent indicia that uniquely define the substrate or some portion of the substrate, in two dimensions. Digitizer panel **115** may comprise more than one layer. For example, a durable layer may be used on the top surface. Anti-reflective (AR), anti-glare (AG), polarizing, color filtering, light reflecting, or dichroic optical layers may be included. Touch screen electrodes or resistive surfaces may be included, as well as adhesive layers used to laminate various layers of panel **115**. Panel **115** may be rigid or flexible.

Anoto Company AB, of Sweden, licenses software that allows companies to print opaque indicia in the form of ink on, for example, paper. Anoto also sells pens that recognize the indicia and thereby determine the X-Y coordinates of the pen relative to the printed paper.

Indicia and sensing techniques based on various patterns are further described in U.S. Pat. Nos. 5,051,763; 5,442,147; 5,477,012; 5,852,434; 6,502,756; 6,548,768; 6,570,104; 6,586,688; 6,663,008; 6,666,376; 6,667,695; 6,689,966; 6,722,574; and 7,622,182, each of which is hereby incorporated by reference in its entirety. Anoto is one company that has developed location unique indicia-based digitizer systems; other systems will be known by the skilled artisan, and inventions described herein may be applicable to many of them.

For digitizers that operate overlaid upon a display, indicia that produce indicia emitted light outside the visible range may be preferable. Indicia for such applications are preferably formed of any suitable material that provides emitted photoluminescence at wavelengths between 700 and 1000 nm. Such materials are readily available, as are IR filters and optical sensors that operate in this range. For example, Hamamatsu Photonics of Hamamatsu City, Japan, sells several charge-coupled device (CCD) optical sensors sensitive to IR wavelength ranges. For some applications, other wavelength ranges, such as longer IR wavelength ranges, may be preferable.

Any suitable photoluminescent material may be used for indicia. In one embodiment, a suitable indicia material comprises photoluminescent inks. Some example photoluminescent inks and dyes are available from QCR Solutions Corp, of Port St Lucie Fla. (see dyes including IRF820A and IRF940A).

In another embodiment, photoluminescent quantum dots may be embedded in a carrier material, such as a resin or liquid, to make a dye. Quantum dots, in some embodiments, luminesce when exposed to excitation light provided over a wider range of wavelengths from UV to IR, which is not true for many other luminescent materials. Thus, quantum dots may be particularly suited for, for example, system **102** (FIG. **1***c* and FIG. **4***d*) where a quantum dot luminescent material can absorb energy from a white LCD backlight. Other luminescent materials may require a special backlight for system **102** that emits light in their specific absorption range.

There exists a wide variety of commercially available quantum dot options. Quantum dots can be selected as to provide indicia emitted light with a variety of wavelengths from the ultraviolet (for example, quantum dots comprised of ZnSe) through the visible (for example, quantum dots comprised of CdSe), and into the mid IR (>2500 nm) (for example, comprised of PbSe. Quantum dots that provide indicia emitted light in the IR range may also be made of PbS, PbSe, or InAs. Quantum dots made of PbS having diameters from about 2.7 to 4 nm will provide indicia emitted light in the near IR range of wavelengths. Quantum dots with a core of InAs and a shell of higher band gap material, for example ZnSe or PbSe with an inorganic passivation shell of CdSe, may have improved photoluminescence quantum efficiencies. Quantum dots having core of CdTeSe with a ZnS shell are commercially available from Nano Optical Materials of Torrance, Calif. Quantum dots stabilized with a combination of thioglycerol and dithioglycerol have also been shown to improve stability of luminescence wavelength over time. Quantum dots may be purchased commercially from companies including Nano Optical Materials, NOM's parent company Intelligent Optical Systems (also of Torrance, Calif.), and Evident Technologies of Troy, N.Y. Evident Technology markets a PbS based dye with the name "Snake Eye Red 900" that may be formulated into an ink for printing. Life Technologies, of Grand Island, N.Y., and Nanosys, of Palo Alto, Calif. offer printable quantum dot solutions, for example anti-counterfeit inks containing quantum dots.

Indicia may be printed onto any suitable substrate, as mentioned above. Many known printing processes may be used, including flexographic, gravure, ink jet, or micro-contact printing. Photoluminescent material may be dispersed homogeneously into an optically clear resin and deposited on a substrate using methods such as flexographic or gravure printing. Gravure printing may be preferable for printing larger photoluminescent particles such as IRF820A. Flexographic printing may have cost advantages in high volume applications. Inkjet printing may be preferred where smaller volumes of customized patterns of indicia are desired. Inkjet printing of quantum dots is described in the articles: Small, A. C., Johnston, J. H. and Clark, N., *Inkjet Printing of Water "Soluble" Doped ZnS Quantum Dots*, European Journal of Inorganic Chemistry, 2010: pp. 242-247.

Printing of indicia in a thin layer is generally preferable in embodiments where indicia are printed on a substrate that overlays a display, because refraction of light through the indicia can be minimized. Transparency can also be maximized by thinner layers and in some cases luminescence quenching can be reduced. Photoluminescent quantum dots can be printed in a monolayer using micro-contact printing. A monolayer of quantum dots maximizes transparency to visible and IR wavelengths. In doing so, visible light transmission is maximized along with reflection of indicia-generated IR light (**5***a*, **6***a* in FIG. **4***b*, **4***d*).

Monolayers of quantum dots may be printed using micro-contact printing methods described in the article *Direct Pat-*

terning of CdSe Quantum Dots into Sub-100 nm *Structures* (Small, A. C., et. al., European Journal of Inorganic Chemistry (2010): pp. 242-247), and the article *Fabrication and Luminescence of Designer Surface Patterns with β-Cyclodextrin Functionalized Quantum Dots via Multivalent Supramolecular Coupling* (Dorokhin, et. al., Institute of Materials Research and Engineering, Agency for Science, Technology and Research, ACS Nano (2010), 4 (1), pp. 137-142.

The latter of these articles describes two methods of microcontact printing luminescent CdSe/ZnS core-shell quantum dots. In both methods, quantum dots are functionalized by coating with surface ligands of β-cyclodextrin that promote binding, and stabilize the quantum dots in a water-based colloidal suspensions. In both methods, polydimethylsiloxane (PDMS) stamps are used for micro-contact printing onto glass substrates. In one method, a substrate is first microcontact-printed with a pattern of adamantyl terminated dendrimeric material, then a colloidal suspension of functionalized quantum dots are exposed to the printed substrate, and quantum dots bind to the material printed on the substrate. In a second method, functionalized quantum dots are directly microcontact printed onto a dendrimer layer on a glass substrate.

Depending on the photoluminescent pattern required, microreplication can be used to make a tool with a negative of the desired pattern. The tool is then pressed and cured against a uniformly coated polymer layer to form consistent dents of the pattern in a polymer cured matrix. These dents can then be filled either directly with the a suitable photoluminescent material blended with a carrier or formulated into an ink using precision roll coating methods such as gravure printing, or, indirectly by using roll coating in combination with doctor-blading to remove excessive solution from areas other than within the dents.

Another way of patterning the substrate is to use a direct thermal printing process with a photoluminescent ink so that the ink resides within the well formed in the (typically polymeric) substrate by the thermal printing mechanism. This may have the added advantage of rapid single step digital processing that can provide custom patterns without, in some embodiments, the need for costly tool development.

Photoluminescent indicia can be created using either organic or inorganic dyes or pigments depending on the nature of the application. Organic dyes, such as CY7 which is available from Lumiprobe of Hallandale, Fla., provide several benefits such as high luminescence. However, the Stokes shift for these types of dyes is typically <50 nm and the durability and light-fastness are often low, making them unsuitable for some applications. Carbon chains with conjugated bonds or aromatic rings are typical present in organic dyes, and are sometimes associated with nitrogen or sulfur atoms. For example, CY7 consists of a cyclohexane-bridged polymethyne chain.

Inorganic dyes, pigments, phosphors or other luminescent materials, such as the earlier mentioned Snake Eye Red provide another solution. The Stokes shifts for these materials can be relatively high due to the large bandwidth of the absorption curves compared to organic dyes. These materials consist of the cations of metal in an array with the non-metallic ions, such as lead-sulfide (PbS) in Snake Eye Red.

Turning now to FIG. **1***b*, a stylus digitizer system **101** is shown, comprising stylus **120**, digitizer panel **115** patterned with photoluminescent indicia, display **105***a*, and electronic controller **130** that receives position-related information from stylus **120** and controls displayed images via link **135**. Display **105***a* emits or reflects visible light, and display **105***a* is at least partially transmissive to stylus emitted excitation light **3** and to indicia emitted light **5**. Display **105**A may be a transparent OLED display, or static printed image, or other display type.

Turning now to FIG. **1***c*, a stylus digitizer system **102** is shown, comprising stylus **120**, digitizer panel **115** with photoluminescent indicia, LCD **107**, backlight **108**, and electronic controller **130** that receives position-related information from stylus **120** and controls displayed images via link **145**. Stylus **120** detects patterns of light **5** emitted from indicia on digitizer panel **115**. Indicia emitted light **5** preferably has a different wavelength range than visible light emitted from backlight **108**. Indicia emitted light **5** preferably has a wavelength range including wavelengths sufficiently long such that they penetrate LCD **107** regardless of the On/Off state of the pixels in LCD **107**. For example, 950 nm light penetrates most LCDs regardless of pixel state. Indicia on digitizer panel **115** may be energized by excitation light from backlight **108**, so an indicia exciting light source on stylus **120** may be optional and not required.

FIG. **1***d* shows stylus digitizer system **103** comprising stylus **120**, digitizer panel **115** with photoluminescent indicia, and electronic controller **130**. Stylus **120** illuminates indicia on digitizer panel **115** with excitation light **3** and detects indicia emitted light **5**. Digitizer panel **115** may be printed with various graphics, or it may appear blank (as for e.g. a blank sheet of paper), and may be opaque. Stylus **120** may be combined with pen functionality (not shown in FIG. **1***d*, described with respect to inking tip **52**, FIG. **4**). Digitizer pane **115** may be a whiteboard, for example as used in a classroom, and the marker may be incorporated into the stylus, or the digitizer pane may comprise a screen onto which a display is projected.

FIG. **3***a* shows a cross sectional view of a portion of stylus **120**A. Stylus body **41** contains optional light source **34** that may emit excitation light **3** having a first illumination wavelength range. Indicia emitted light **5** having a second indicia wavelength range enters the tip of stylus **120**A and is passed through filter **43**. Filter **43** selectively passes at least some portion of the second wavelength range of indicia emitted light **5** while blocking light of the first wavelength range (that was emitted by light source **34**). For example indicia may emit 800 nm to 1200 nm light and filter **43** may pass light of indicia wavelengths between 750 nm and 1200 nm while blocking light wavelengths below 750 nm. Lens **48** focuses indicia emitted light **5** to pass through aperture **33** then reflect from mirror **32** onto image sensor **45**. Lens **48** may be made of IR transparent, visible light blocking material so lens **48** can also perform the filtering function of filter **43**. Exemplary lens **48** is shown as a simple convex lens, but other lens configurations may be preferable. In some stylus configurations, lens **48** may be required to focus a wide range of wavelengths onto image sensor **53**. Where this is the case, lens **48** may be an achromatic lens.

Image sensor **45** may be any suitable sensor. Sensors based on charge-coupled devices (CCDs) and complementary metal-oxide-semiconductor (CMOS) technologies are used interchangeably in multiple areas of imaging, and may be suitable in this application. In some embodiments, light **5** may have a plurality of indicia wavelength and pattern combinations that uniquely define local regions of a substrate. In these embodiments, image sensor **45** may further include a color filter that passes selected indicia wavelengths of light **5** to some pixels and different wavelengths to other pixels of sensor **45**.

Image sensor **45** is connected to stylus processor **44** by conductors on printed circuit board (PCB) **46**. Light source **34**

is connected to PCB **46***a* by link **36**. Stylus processor **44** controls image sensor **45** and light source **34** via conductors on PCB **46***a* and by link **36** respectively. In addition, the stylus processor controls collection of image information from image sensor **45** and communicating this to controller **130** via link **124**, (shown in FIG. **1***a*). Stylus **120** may also comprise additional components such as switches and a battery, (not shown). Stylus **120** may also comprise a probe **51** extending from the stylus that provides spacing for the optical components, and may activate a switch upon contact with the surface of the digitizer, causing certain stylus electronics to activate. Probe **51** may be made of solid plastic, or metal, and it may contain ink for writing on a surface with stylus **120**. Probe **51** may be optionally retractable.

The illumination wavelength range of light source **34** must provide radiation in a range that excites indicia to produce emission (luminescence) at a desired indicia wavelength and brightness. In one example, indicia emitted light luminesces due to stimulation by light in another, shorter wavelength range. In some embodiments it may be preferable that the excitation light and the indicia emitting light be minimally visible to the user. These criteria are met if light source **34** emits UV-A light, for example between 350 nm and 420 nm or if light source **34** emits near IR light, for example between 700 nm and 850 nm. Excitation light may instead, or in addition, be generated by other components, such as backlights in an LCD panel, or other illumination sources.

Stylus **120**B (FIG. **3***b*) is similar to stylus **120**A, except it has an additional light source **35**. This light source may be beneficially used in stylus embodiments that need to sense both photoluminescent indicia and traditional reflective indicia (the latter commercially available from Anoto). For example, in luminescent mode, processor **44** may select light source **34** to excite indicia with light in the 380 nM wavelength range that then luminesce and emit radiation in an indicia wavelength range centered on 850 nM. Image sensor **45** may be configured to detect images in the indicia wavelength range of 850 nM. In reflecting mode, processor **44** may select source **35** to illuminate indicia that do not luminesce. Source **35** would preferably emit illumination in the indicia wavelength range of 850 nM, so light of this wavelength range will be reflected differently from the indicia relative to their surrounding substrate, and the resulting contrast between indicia-reflected light and substrate-reflected light is detected by image sensor **45**.

FIG. **3***c* shows a simplified cross sectional view of a portion of stylus **120**C that has two light sources like stylus **120**A, but with an alternative construction including a common optical path for illumination light **3** and **6**, and indicia-emitted light **5**. Stylus body **41***c* contains light sources **34***c* and **35***c* that emit illumination light **3** light **6** respectively. Light sources **34***c* and **35***c* may have multiple emitters. In the example shown in FIG. **3***c* axial view, each source comprises two LEDs. Also in the example, light from sources **34***c* and **35***c* is focused by a Fresnel lens **63** in front of each of the four LEDs. Light from sources **34***c* or **35***c* is focused through objective lens **48***c* and emitted from stylus **120**C, where it may illuminate field of view **62**. Light **5** within field of view **62** enters stylus **120**C through lens **48***c* and is focused through an aperture **33** in plate **56***c*, then reflected on mirror **32**. From mirror **32**, light **5** passes to color filter **53***c* where light **5** within a selected wavelength range is passed through filter **53***c* to image sensor **45***c*. The common optical path through lens **48***c* simplifies alignment of outgoing light **3** or **6** with incoming light **5**, and minimizes the required tip diameter of stylus **120**.

Various operating modes of stylus **120** are described elsewhere herein for illuminating indicia with various wavelengths of light and sensing images of photoluminescent or light-reflecting indicia. In a further mode, stylus **120** may detect images of indicia that radiate light in the visible wavelength range. For example, stylus **120** may sense images formed by pixels of a visible light emitting display, for example, as described in U.S. Pat. No. 7,646,377, which is hereby incorporated by reference in its entirety. Sensing visible images from a light emitting display such as an LCD, OLED, or projection display does not generally require illumination by a stylus light source, so sources **34** and **35** may be turned off by processor **44** when the stylus is in visible light sensing mode. Sensing light in the visible wavelength range requires that image sensor **45** be sensitive to visible wavelengths, and that incoming light **5** passes through filters so it reaches image sensor **45**. Any of sensors **45** may be sensitive to visible light. Any of filters **43** or **53**, or similar, may pass visible wavelengths.

FIG. **3***d* shows a simplified cross sectional view of a portion of stylus **120**D that is similar to stylus **120**C, but forward-facing light sources **34***c* and **35***c* are replaced by lateral-facing light sources with a light guide **61** that turns light **3** or light **6** by 90 degrees and focuses it toward objective lens **48***d*. Light guide **61** may be coated with reflective material on its rear surface and on edges, with the exception of the edge where light from sources **34***d* and **35***d* enter light guide **61**. Fresnel lens facets **62** on light guide **61** may be used to focus light **3** and light **6** to uniformly illuminate the field of view **65**. Light **5** enters the end of stylus **120**D through lens **48***d* and is focused through aperture **33**, then reflected on mirror **32***d*. From mirror **32***d*, light **5** passes to color filter **53***d* and to image sensor **45***d*. FIG. **3***e* shows a simplified cross sectional view of a portion of stylus **120**E that is similar to stylus **120**D, but the single image sensor **45***d* is replaced by two image sensors **45***e* and **75**, having filters **53***e* and **73**, respectively. Light **5** enters the end of stylus **120**E through lens **48***e* and is focused through aperture **33** in aperture plate **56***d*. Light in the IR wavelength range is then reflected on dichroic mirror **69** to filter **53***e* and image sensor **45***e*. Filter **53***e* may separate IR light into different wavelength ranges so image sensor **45***e* can discriminate one wavelength range from another, or image sensor **45***e* may detect a monochrome image including a single range of IR wavelengths. Light **5***e* in the visible wavelength range passes through dichroic mirror **69** and visible light filter **73** to image sensor **75**. Filter **73** may separate visible light into different wavelength ranges so image sensor **75** can discriminate one wavelength range from another, or image sensor **75** may detect a monochrome image including the full range of visible wavelengths. Flexprint **77** connects image sensor **75** to PCB **46***c*. Processor **44***e* uses image information from image detector **45***e* and **75** to resolve images that may include images in an IR wavelength range and/or images in a visible wavelength range. Dichroic mirror **69** may comprise the same material used for dichroic substrate **148**, described with respect to FIG. **4***b*, separate image sensors may have advantages including higher potential special resolution, and availability of specific ICs that lack a color filter, but have advantages such as low cost and high imaging frame rate.

FIG. **2***a* shows an Anoto type indicium within the solid rectangle, comprising a pattern of opaque dots on a substrate, arranged on a virtual 6×6 matrix indicated by dotted lines. Each intersection of the matrix has one dot, and each dot is position-encoded into one of four positions above, below, left, or right of the intersection. This provides a coding system based on thirty-six digits of base four, so each 4-some combination of the indicia can represent as many as 4^{36} unique codes. Permutations of codes are reduced to allow indepen-

dent encoding of X and Y coordinates in each indicium. Permutations are also reduced by the requirement for redundancy that allows determination of the position of a partial surface, and to detect code sequences from any orientation. Even with such reductions, Anoto indicia can encode extremely large areas with position-unique indicia less than 2 mm in size, where each of the indicia uniquely defines a local region of a substrate.

Photoluminescent indicia described herein may use the same pattern of monochrome dots as used by Anoto, or other options may be preferable. For example, visible light transmissive photoluminescent materials may be used to make features of larger size that still have minimal optical visibility. Larger dots or other feature shapes may be easier to print, and material with larger photoluminescent particles may be used, while indicia size is maintained at less than 2 mm square.

Indicia features emitting distinguishable wavelengths of light provide additional coding alternatives. The base four coding system described above can be achieved with four wavelength combinations instead of four-quadrant dot placements or four symbol shapes. An example is shown in FIG. **2***b*, where dots comprising photoluminescent nanoparticles with different emission wavelength ranges are used to uniquely define an indicium **190**, which together with other indicium may be used to uniquely define local areas of a substrate. A first indicia wavelength range may be centered on 850 nM and a second indicia wavelength range may be centered on 950 nM. Indicia may comprise dots, or other shapes, positioned in any of thirty-six positions. Each possible dot position has one of four features: a dot of the first indicia wavelength range **191**, a dot of the second indicia wavelength range **192**, a dot with indicia wavelengths from the first and second ranges **193**, or no dot. Other wavelength combinations, and other feature shapes or combinations of feature shapes may be used. For example, a four-position encoded pattern of dots may also have dots of two wavelength ranges, so each position in a 5×5 indicium has eight possible codes, resulting in more than 4^{36} unique codes in a 5×5 matrix.

FIG. **2***c* shows an indicium **195** comprising a 5×5 array that comprise dots that luminesce in a plurality of wavelength combinations, the wavelength combinations uniquely defining local regions of the substrate. The 25 possible positions in the array have dots having one of four features: a dot of the first indicia wavelength range **191**, a dot of the second indicia wavelength range **192**, a dot with indicia wavelengths from the first and second ranges **193**, or no dot. The pattern is restricted to no dots at three corners, as shown; all other positions of the top, right, and bottom edges have dots that emit in at least one wavelength. This pattern provides easy recognition of indicia borders and angular orientation. Given feature-to-feature spacing of 0.3 mm, a repeating pattern of unique indicia can provide pattern and wavelength combinations uniquely defining local regions of a substrate area nearly 500,000 square meters.

FIG. **2***d* shows details of a portion of exemplary color filter **53** that is configured as an array of filter cells, using known color filter methods. Most color filters have arrays of cells that pass red, green, or blue light to pixels an image sensor. For example many color filters use a Bayer filter (U.S. Pat. No. 3,971,065) that has twice as many green filter cells as red or blue, often in a pattern of R,G,G,B or R,G,B,G. Filter **53** replaces one or more of the R,G,B filter cells with cells that pass light in the IR wavelength range. Filter **53** can pass up to four wavelength ranges to selected pixels of an image sensor, so the image sensor can discriminate among image features having different wavelength ranges, or colors. In one embodiment, filter **53** passes two wavelength ranges of visible light and two wavelength ranges of IR light to image sensor **45**, with coupled electronics that resolves a location based on signals from the image sensor. Such a filter, or one like it, may be advantageously used in conjunction with resolving indicia such as indicium **190** and **195**.

In one embodiment described with respect to FIG. **2***b* and FIG. **2***c*, four color filter cells in filter **53** comprise cells **112** and **113** that pass IR light centered on 850 nM and 950 nM respectively. And visible light cells **114** and **115** that pass light centered on wavelengths 500 nM and 600 nM respectively. IR cells **112** and **113** preferably pass light with a bandwidth of +/−50 nM. Visible cells **114** and **115** preferably pass light with a bandwidth of +/−100 nM. Other color filter layouts may be used, and other filter wavelength combinations may be used. In some embodiments, it may be sufficient to detect monochrome visible images, so filters **114** and **115** may both detect visible light from 450 nM to 700 nM, for example. In some embodiments, visible image detection may not be required, so all cells of filter **53** may pass one or more IR wavelength ranges.

Table 1 summarizes the operating modes of stylus **120**. Modes will be described with respect to components of stylus **120**C, although the modes apply to the other exemplary stylus configurations herein. Table 1 shows examples of components used in various combinations to read images from various media.

Stylus Mode 1—Photoluminescent Media

To read photoluminescent indicia, light source **35** is turned on and source **34** is off. The indicia image may be filtered through an IR-transparent color filter. For example, filter **43** or cells of a color separating filter such as cells **112** and/or **113** in filter **53**. The image is read from image sensor **45** by processor **44**.

Stylus Mode 2—Passive Media

To read light absorbing passive indicia on a light diffusing or reflective substrate such as paper, source **34** is turned on and source **35** is off, so light **3** emitted from stylus **120** is at a wavelength that will pass through stylus filters **43** or **53** to stylus image detector **45**. Light **5** reflected from indicia having an image formed by contrast between indicia features and the substrate, is received and filtered through IR-transparent color filter **43** or IR-transparent cells in filter **53**, and the IR image is read from image sensor **45** by processor **44**.

Passive indicia on a light transparent substrate may absorb light, or they may diffuse or reflect it. To read light from such media, source **34** is turned on and source **35** off, so light **3** emitted from stylus **120** is at a wavelength that will pass through stylus filters **43** or **53** to stylus image detector **45**. The illuminated indicia image light **5** is received and filtered, and the IR image is read from image sensor **45** by processor **44**. The image received from passive indicia on a transparent substrate may be a reverse image relative to passive media on an opaque substrate, depending on whether the indicia or the background reflect light **5** toward stylus **120**.

Stylus Mode 3—Visible Emitting Display

To read a light emitting visible image, (for example, indicia displayed on an LCD or OLED), source **35** and source **34** may be turned off. A displayed cursor may be used as a location-specific indicium, or pixels on a display may be tracked to detect movement as described in U.S. Pat. No. 7,646,377. In addition, the IR-measuring pixels of image sensor **45** may be read, to detect any time-varying IR signals that may be emitted from the display. Time-varying IR signals may be encoded to indicate which of several displays are in the field of view of stylus **120**, as described in U.S. patent application Ser. No. 13/454,066, which is hereby incorporated by reference in its entirety.

TABLE 1

Mode	Image being read	Stylus Component: source 35 (excitation light)	source 34 (IR light)	Image sensor IR pixels	Image sensor visible pixels
1	Photoluminescent Indicia	On	Off	Read image	
2	Passive Indicia (reflective)	Off	On	Read image	
3	Visible emitting display	Off	Off		Read image

In one embodiment, multi-mode stylus **120** can operate in various modes as listed in Table 1. Manual switching of modes may be done with switches on the stylus or by interaction with an application and GUI on a display. Automatic switching among modes may also be supported, based on input received by stylus **120**. For example, given stylus **120** with filter **53** and image sensor **45** that can sense images in multiple wavelength ranges, and two illumination sources **34** and **35** of different wavelengths, images under different combinations of source illumination may be tested sequentially until a valid image is recognized. The following exemplary algorithm may be used to automatically switch stylus sensing modes:

1. Stylus Mode 3 is activated, whereby sources **35** and **34** are turned off, then visible images are detected.
   1.1. Detected images are processed to recognize any supported indicia in the stylus FOV. If no supported indicium is detected, go to step 2, otherwise,
   1.2. Any detected visible image is correlated with supported indicia or stylus-locator cursors, for example as, for example, described in U.S. Pat. No. 7,646,377.
      1.2.1. If matched, a display-referenced location is calculated and reported.
         1.2.1.1. Repeat from Step 1.1
   1.2.2. If unmatched, report no stylus-related visible image is in the FOV.
2. Stylus Mode 1 is activated, whereby source **35** is turned on and source **34** is turned off, then IR images are detected.
   2.1. Any detected IR image is correlated with supported indicia patterns. If a positive correlation is determined, a luminescent digitizer location is calculated and reported.
      2.1.1. Repeat Step 2 until no IR image is detected, then go to Step 1
3. Stylus Mode 2 is activated, whereby source **35** is turned off and source **34** is turned on, then IR images are detected.
   3.1. Any detected IR image is correlated with supported indicia patterns. If a positive correlation is determined, a passive digitizer location is calculated and reported.
      3.1.1. Repeat Step 3 until no IR image is detected, then Go to Step 1.

Referring now to FIG. **4**A, photoluminescent indicia **119** are deposited on the surface of visible light transmissive substrate **118**. Indicia may be deposited by printing a thin layer of photoluminescent material. For example photoluminescent quantum dots may be mixed with a printable medium, and printed using known methods. Indicia-printed substrate **118** is then laminated to durable overlay **116**, which may be glass, acrylic, or any suitable transparent working surface that will protect the indicia. Alternatively, indicia may be printed on the bottom surface of overlay **116**.

Adhesive **117** that binds substrate **118** to overlay **116** may be an optically clear adhesive (OCA) such as those sold be 3M Co. of St Paul, Minn., USA. Adhesive **117** may be replaced by an air gap, (providing indicia **119** have an environmentally protective coating) and air gap **109** may also be replaced with an OCA.

Illumination from stylus **120** comprises excitation light **3** and **3***a* which have a first wavelength range (for example, near UV-A or near IR). Light **3***a* that does not get absorbed by indicia **119** passes through substrate **118**, and is absorbed or reflected by layers below. Some of light **3** is absorbed by indicia **119** which excites indicia **119** such to radiate indicia emitted light **5** in various directions, including into the stylus housing which includes optical sensing electronics, as described earlier. Indicia emitted light **5**, in this embodiment, is primarily in a second wavelength range, in this case it is within the IR range. Visible display light **7** and **8** is emitted from display **105**. Some display light **8** that hits indicia **119** will pass through the indicia. Some of the display light **2** may also be absorbed by the indicia **119** and will excite the indicia causing it to luminesce, resulting in light **6**. Ambient light **9** may also cause photoluminescence in indicia **119**, resulting in indicia emitted light **6**.

Display **105** is shown as a planar cross section, but display **5** may include other shapes. For example, the display may comprise a rear projector and a rear projection panel.

FIG. **4**B shows a digitizer system identical to that in FIG. **4***a*, except substrate **118** is replaced by dichroic substrate **148** that passes light of some the first wavelength range while reflecting light of the second wavelength range, where wavelengths of the first range are typically shorter than wavelengths of the second. For example, substrate **148** may be visibly transparent IR reflective material such as 3M Company's multilayer optical films (MOF) which are available commercially under the names Crystalline automotive films and Prestige Series residential window films. Dichroic reflective substrate **148** increases the efficiency of the system by redirecting indicia-generated light of the second wavelength range that would not otherwise have reached stylus **120**. 3M Company's PR90EX film may be used for the reflective substrate **148**.

FIG. **4**C shows a magnified cross section view of a portion of digitizer and display system **102** (see FIG. **1***c*). In this embodiment, indicia are excited by light radiation provided by backlight **108**. In other embodiments, however, the stylus could additionally include such a further illumination source.

If display **107** is a light emitting display such as a (transparent) OLED, backlight **108** may not be required. Where optional backlight **108** is used (for example, in combination with an LCD display), visible (white) display light **7** and **8** may be emitted from optional display backlight **108**. A portion of light **7** that is not absorbed by Indicia **119**A passes through substrate **118**, optically clear adhesive layer **117**, and through pixels of display **107**, to form a displayed image. Light from backlight **108**, may comprise wavelengths outside the visible spectrum. For example, near infrared (IR) light (700 nm-1000 nm) or near UV light (e.g. 350 nm-400 nm) may be emitted from the backlight to energize indicia on substrate **118**. Some of these wavelengths may be filtered out by layers above the indicia, (for example, the color filter of display **107**, which would be typical if **107** were an LCD), so minimal amounts of these wavelengths of light may reach the user. An LCD display comprising quantum dots energized by a backlight is described in US Patent Application No. 2008/0246388, "Infrared Display with Luminescent Quantum Dots."

FIG. **4**D shows a magnified cross section view of a portion of digitizer and display system **103** (see FIG. **1***d*). The stylus, in this embodiment, is similar to that described with respect to FIG. **4***b*, in that it includes an illumination source that excites

the indicia. This embodiment shows the use of photoluminescent position-unique indicia in a whiteboard-type environment. A transparent overlay including photoluminescent indicia **119** and optically clear adhesive layer **117**, as well as substrate **156** (here, substantially light transmissive such that graphics on the surface of substrate **158** are visible through the stack comprising substrate **156** and OCA **117**). Surface **159** of substrate **156** may be layered with a material, such as Tedlar® (available from DuPont), polypropylene, or other surface compatible with white-board applications, or it could be an anti-scratch, anti-reflective, anti-glare, polarizing, or color filtering layer. Substrate **156** may comprise a plurality of layers. In such embodiment, stylus **120** may include inks compatible with whiteboard applications, such that a user may write on the whiteboard while electronics in the stylus computes coordinates of the writing and provides these to a computer.

FIG. **4**E shows the use of photoluminescent indicia on an opaque or translucent substrate. Photoluminescent indicia **119** are deposited on the top surface of substrate **168**, which may be paper, cardboard, PET, PEN, glass, acrylic, or any material that supports indicia **119**. Indicia **119** are deposited by printing a thin layer of photoluminescent material. For example photoluminescent quantum dots may be mixed with a printable medium, and printed using known methods. Indicia-printed substrate **168** may then be covered with optional layer **167** that is transparent to stylus excitation light **3** and indicia emitted light **5**. Layer **167** may optionally be added to protect indicia. Layer **167** may be an anti-scratch layer, a durable layer comprising a polymer hardcoat, or a polymer hardcoat filled with silica particles, or a sheet of material such as PET may be laminated to substrate **168**. Surface **169** may have anti-reflective (AR), and/or anti-glare (AG) properties. Additionally, substrate **168** may be printed with a visible static image. While the pen showed in FIG. **4***e* includes an illumination source to excite indicia within the stylus FOV, depending on the application, the stylus could sense indicia excited by other means, such as ambient light **9**. In such case, the stylus would not necessarily need an illumination source.

FIG. **4**F shows a somewhat different embodiment, where stylus **120** senses passive indicia that operate in a light absorbing or light reflecting mode, for example, as indicated in Table 1, Mode 2. In this embodiment, stylus **120** provides an illumination source (for example, light source **34** in FIG. **3***c*) that is reflected by substrate **178**, but not reflected by, or minimally reflected by the features of indicia **179**, for example the dots exemplified in FIG. **2***a*. Indicia **179** preferably comprise a thin layer of IR-absorbing material; substrate **178** is preferably an IR-reflecting or IR transparent material; and the image sensor in stylus **120** senses the reflected light that has the same wavelength as the illumination source. An image is formed by contrast between reflected light and indicia-absorbed light. Thus this embodiment provides a "negative" image of the indicia, which may be desirable in some embodiments, for example to detect black (IR absorbing) indicia features printed on white paper. Alternatively, indicia features may reflect light of the illumination source **34** and the substrate may absorb stylus illumination, resulting in a "positive" image of indicia-emitted light on a dark background being detected by image sensor **45**.

FIG. **4**G shows a magnified cross section view of a portion of digitizer and display system similar to system **100** (see FIG. **1**A), except the substrate portion of digitizer **115** is eliminated and indicia **119** are printed onto color filter **152** of LCD **105***g*. Indicia **119** are in one embodiment optically transparent, and the features of indicia **119** (for example the indicia dot patterns similar to **190** or **195**) may be aligned with the color cells of color filter **152**. As an alternative construction, indicia **119** may be printed onto the bottom surface of top polarizer layer **153**. Integration into an LCD offers the advantage of thinner construction and potential for better visible light transmission through LCD **105***g*.

Electronically addressable display **105***g* (e.g., an LED, plasma, etc.) has display coordinates that uniquely identify the location of each pixel. Similarly, digitizer **115** (FIG. **4**A-**4**D) includes a digitizer coordinate system wherein each location on the surface is identified by location-unique indicia **119**. Given the display is co-planar with a digitizer, digitizer coordinates can be aligned with display coordinates of such systems using a calibration process that associates each display pixel at a particular localized area with one or more of digitizer indicia **119** associated with that same localized area. After calibration, indicia **119** can be used to indirectly reference display pixel coordinates and vice versa.

Calibration may be performed at a manufacturing site, or by the end user of a device. In some "after market" embodiments, a user may assemble the digitizer **115** onto a display **105**. In such case, it will generally be necessary for the user to perform calibration. The calibration system described below allows a user of minimal skill to perform an accurate calibration. Two alternative calibration methods are described below.

FIG. **6** shows a view of display **105** and surface **115** with indicia **119**, which are in this drawing represented by position-unique number and letter symbols (used herein only for illustration purposes). In practical systems, indicia will typically comprise position-unique dot or line patterns, for example those described with respect to FIG. **2**. Each of the indicia **119** are located at known digitizer coordinates on surface **115**. The X,Y coordinates of indicia **119** are designated as iX_n, iY_m. Coordinates of pixels on display **105** are designated as dX_n, dY_m.

A first calibration embodiment is described with respect to FIG. **6**. In a calibration mode, display **105** radiates a calibration indicium **10** at a first localized area with a first indicia wavelength range that comprises visible light. In the example described with respect to FIG. **6**, indicium **10** is a round spot that serves as an indicium for stylus **120** and may also serve as a user-visible cursor. Stylus **120**, or generically a sensor device or a sensing unit, is placed so calibration indicium **10** is in its field-of-view (FOV) **65**. Placement of the stylus may be done by a user aiming stylus **120** at visible indicium **10**. Stylus **120** senses indicium **10**, and stylus **120** also illuminates its FOV with light of a first illumination wavelength range and senses whatever photoluminescent indicia are also present with its FOV, which radiate light within a second indicium wavelength range. In other words, the photoluminescent indicia being sensed are also associated with a common first localized area. In some embodiments, the second wavelength range is not the same as the first. One or more digitizer indicia within the FOV will happen to be co-located with display indicium **10**. The digitizer will determine and note the coordinates of such co-located indicia. The co-located indicia are then associated with the display coordinates of the calibration indicium. These coordinates are stored and used to relate subsequent digitizer measurements to display coordinates. For example, in the example shown in FIG. **6**, indicia r and s are in the FOV of stylus **120** but only s is co-located with indicium **10** so s is associated with the address of pixels forming indicium **10**. Calibration may continue with indicium **10** placed at a second predetermined location, and the above-described calibration procedure repeated.

A second embodiment of the calibration process is also described with respect to FIG. **6**. In this embodiment stylus **120** does not sense radiation in the first indicium wavelength range emitted by indicium **10**, but only senses indicia-radiated light in a second indicia wavelength range that is emitted from digitizer indicia **119**. Indicia **119***a*, upon exposure to excitation radiation, luminesce in a second indicia wavelength range in response to light energy from indicium **10**.

Display **105** activates indicium **10** having light in a first indicia wavelength range that may comprise visible light. Stylus **120** is placed so calibration indicium **10** is in its FOV **65**. Light from pattern **10** illuminates indicia **119***a*, which is co-located with (i.e., in this case directly above) indicium **10**, and causes them to radiate indicia emitted light (luminescence) in a second indicia wavelength range that is different from the first wavelength range of indicium **10**. Stylus **120** senses indicia **119***a* in its FOV. Ambient light **9** is preferably limited to prevent ambient light **9** from being a source of excitation radiation to indicia **119** that are not illuminated by light from indicium **10**.

Display **105** is, in this second calibration embodiment, emitting no light except for the displayed indicium **10** that is centered at display coordinates dX_{10}, dY_{10}. (which correspond to the center of indicium **10**. Most of photoluminescent indicia **119** are dark because they have no excitation energy, with the exception that indicium **10** is illuminating indicia **119***a*, causing it to luminesce. Stylus **120** with indicium **10** in its FOV senses indicia **119***a* at digitizer coordinates iX_{10}, iY_{10}. Thus the display coordinates dX_{10}, dY_{10}. are determined to be co-located with indicia coordinates iX_{10}, iY_{10}. Light sources **34** and **35** in stylus **120** are turned off during this procedure of embodiment 2. Display **105** may emit light in a time-modulated sequence and the stylus may demodulate the resulting time-modulated signal re-radiated from indicia **119***a*.

If display **105** has higher resolution than indicia **119**, the location of indicium **10** may be adjusted in size until it minimally circumscribes a single indicium. This may increase the accuracy of aligning indicium **10** with digitizer indicium **119***a*. Indicium **10** may also be incrementally adjusted in the X and/or Y direction as the illumination level of the excited indicium **119***a* is measured, to determine the exact location of the indicia relative to display **105**.

The procedures described in both the first and second calibration embodiments have a benefit that the calibration pattern must be in the stylus FOV, but it need not be in the center of the stylus FOV, so inaccurate placement of the stylus has minimal effect on calibration accuracy. Identification of orientation (for example the rotation) of indicia relative to a stylus may also provide information about the orientation of the stylus relative to a digitizer and a display.

Using either calibration method described above, calibration data is computed by way of a processor, and such calibration data may then be outputted to another computing device which may store such calibration data for future reference. For example, a computer may store the calibration data so the calibration routine need not be repeated each time the computer boots.

Stylus **120** may have an extendable tip **51** that makes contact with a digitizer surface. In Mode 2, the stylus is used with passive indicia, which may include indicia printed on paper. Where writing on paper may be preferable, an extendable/retractable inking tip **51** may be extended. In other modes, inking may not be desirable and a different (e.g. non-scratching) tip material such as Delryn plastic may be preferred. Stylus may have a plastic tip **71** that extends beyond lens **48**, and an ink-dispensing tip **51** that can be adjusted to extend beyond plastic tip **71**, or to retract so plastic tip **71** is the outermost point beyond lens **48**.

The digitizer panel can be integrated into a display stack-up in a variety of ways using a variety of rigid or flexible materials. One embodiment shown in FIG. **5***a* comprises an overlay where the digitizer panel is attached to a device **205**, in an after-market application using self-wetting adhesive **201**. This panel is constructed by forming the photoluminescent indicia **202**, on one side of substrate **200** (in this case PET), and covering these indicia with said adhesive **201**. To attach the panel, the user may place the adhesive-side of the panel onto the device **205**. To improve the durability of the overlay, a hard-coat may be added to the side of the panel that faces the user.

Another embodiment shown in FIG. **5***b* for an overlay in aftermarket applications may be constructed by first printing the indicia **202** on multilayer optical film (MOF) **203**, which reflects IR. In this construction, the device-facing adhesive **204** may be placed on the opposite side as the indicia since the emitted signals from the photoluminescent dyes do not pass through MOF **203**. To further protect the indicia from the user's interaction, a protective layer **200**, such as PET, may be adhered to the top of the MOF to cover the indicia, using adhesive **201**.

Another embodiment is an underlay where the digitizer panel is attached to a touch-sensitive screen including but not limited to those product offerings from 3M Touch Systems, as a surface-capacitive technology (SCT) screen or a projected-capacitive technology (PCT) screen. FIG. **5***c* shows such an embodiment, where the photoluminescent indicia **202**, formed on a transparent substrate **200**, such as PET or MOF, covered with an optically-clear adhesive, **201**. This adhesive may then be attached to the back of the touch sensitive screen **205**, using a variety of methods known in the art. Another embodiment as shown in FIG. **5***d* is to print the photoluminescent indicia **202** directly onto the touch sensitive screen **205**, either at the beginning, middle, or end of an already established process.

Another embodiment shown in FIG. **5***e* is specific to a layered touch sensor, such as a PCT screen, as an underlay solution. In such an embodiment, the photoluminescent indicia **202** are disposed on the same layer **206** as the component or components including the matrix of electrodes, and then the screen may be integrated to as normal into other devices.

Yet another option is shown in FIG. **5***f*, which shows the digitizer panel as an underlay between the cover lens of a touch sensitive screen **205** (in this case a visible light transmissive PCT screen) and the layer **206** that includes the matrix of electrodes, by forming photoluminescent indicia **202** on a visible-light-transparent substrate **200**, which could comprise materials such as PET or MOF, and adhering this to the cover glass using a variety of methods known to the art. The resultant stack can then be adhered to the digitizer panel using methods known in the art (for example, by laminating with optically clear adhesive **201**).

Example

This example describes the set-up that may be used to demonstrate photoluminescent indicia that can be viewed at various stylus angles. It consists of an illumination source, a photoluminescent medium, and an image sensor placed behind a suitable filter. The illumination source comprised a light emitting diode (UVXTZ-400-15 supplied by BIVAR, Inc, of Irving, Calif.), powered with 20 mA of current and placed at a distance of about 3 cm from the substrate on which a luminescent dye was printed to form position-unique photoluminescent indicia. The diode had a spectral emission centered at about 400 nm. Light from the diode was incident

on the printed fluorescent dye IRF820A and caused photoluminescent emission. The photoluminescent material comprised IRF820A, which was purchased from QCR Solutions Corp. of Port Saint Lucie, Fla. It came in a powder form with a quantum efficiency quoted at 0.2 for fluorescence between 700 nm and 1000 nm.

As an initial experiment, the fluorescent particles were dispersed at room temperature into OP2001 Matte Varnish resin at a concentration of 0.5% and manually deposited onto a small sample of MOF using a toothpick. The OP2001 Matte Varnish was purchased from the series for UV Flexo Varnishes of Nazdar Company of Shawnee, Kans. The MOF substrate comprised PR90EX manufactured by 3M Corporation of St. Paul, Minn. This particular MOF was high in transmission over the visible range and was highly reflective beyond 850 nm. An optical filter was placed in the path of the light entering a CCD image sensor that was used as an imaging tool in the stylus. The optical filter was a long pass filter, comprising Clarex NIR-75N, supplied by Astra Products of Baldwin, N.Y. This filter suppressed transmission of light wavelengths below 750 nm. As a result, specular reflection from the diode that obscured some indicia in was largely suppressed from reaching the image sensor, while IR light emitted by the fluorescent dye was detected by the image sensor, resulting in a clear image of position-unique photoluminescent indicia on the substrate.

In a further experiment, an illumination source comprised a light emitting diode (L750-04AU supplied by Marubeni America Corporation of Santa Clara Calif.), powered with 20 mA of current and placed at a distance of about 3 cm from the substrate onto which a fluorescent dye was printed to form position-unique photoluminescent indicia. The diode had a spectral emission centered at about 750 nm. Light from the diode was incident on the printed fluorescent dye EviDot Snake Eyes and caused photoluminescent emission. The photoluminescent material comprised EviDot Snake Eyes, which was purchased from Evident Technologies of Troy N.Y. It came in a liquid form of quantum dots in toluene with a quantum efficiency quoted at 0.3 for fluorescence between 400 nm and 1000 nm. As an initial experiment, the fluorescent particles were dispersed at room temperature into Integrity 1100D and manually deposited onto a small sample of PET using screen-printing techniques. The Integrity 1100D was purchased from Hexion Specialty Chemicals of Columbus Ohio by Evident Technologies. The PET substrate comprised ST505 manufactured by Dupont Teijin Films of Chester Va. This particular PET is a clear, heat stabilized polyester film which is pre-treated on both sides for improved adhesion. An optical filter was placed in the path of the light entering a CCD image sensor that was used as an imaging tool in the stylus. The optical filter was a long pass filter, comprising Clarex NIR-85N, supplied by Astra Products of Baldwin, N.Y. This filter suppressed transmission of light wavelengths below 850 nm. As a result, specular reflection from the diode that obscured some indicia in was largely suppressed from reaching the image sensor, while IR light emitted by the fluorescent dye was detected by the image sensor, resulting in a clear image of position-unique photoluminescent indicia on the substrate. These results were achieved at various stylus angles.

The term stylus used herein may include a device that may be moved relative to a digitizer surface. The stylus may have a shape similar to a pen, or a computer mouse, or any shape. Multiple styli may be used simultaneously on a digitizer surface as writing devices, cursor control devices, or game pieces, for example. The stylus may be moved manually or by a mechanical device or a machine. The digitizer surface may be planar, cylindrical, spherical, or any shape.

Unless otherwise indicated, all numbers expressing quantities, measurement of properties, and so forth used in the specification and claims are to be understood as being modified by the term "about". Accordingly, unless indicated to the contrary, the numerical parameters set forth in the specification and claims are approximations that can vary depending on the desired properties sought to be obtained by those skilled in the art utilizing the teachings of the present application. Not as an attempt to limit the application of the doctrine of equivalents to the scope of the claims, each numerical parameter should at least be construed in light of the number of reported significant digits and by applying ordinary rounding techniques. Notwithstanding that the numerical ranges and parameters setting forth the broad scope of the invention are approximations, to the extent any numerical values are set forth in specific examples described herein, they are reported as precisely as reasonably possible. Any numerical value, however, may well contain errors associated with testing or measurement limitations.

Various modifications and alterations of this invention will be apparent to those skilled in the art without departing from the spirit and scope of this invention, and it should be understood that this invention is not limited to the illustrative embodiments set forth herein. For example, the reader should assume that features of one disclosed embodiment can also be applied to all other disclosed embodiments unless otherwise indicated. It should also be understood that all U.S. patents, patent application publications, and other patent and non-patent documents referred to herein are incorporated by reference, to the extent they do not contradict the foregoing disclosure.

The invention claimed is:

1. A system comprising:

a first radiation source for emitting light having a first wavelength range; and

an optical image sensor comprising a first pixel and a different second pixel, the optical image sensor configured to receive radiation having a second wavelength range, different than the first wavelength range, in response to radiation having the first wavelength range emitted by the first radiation source and direct radiation having a first selected wavelength in the received radiation having the second wavelength range to the first pixel in the optical image sensor and radiation having a different second selected wavelength in the received radiation having the second wavelength range to the second pixel in the optical image sensor.

2. The system of claim **1** further comprising a second radiation source for emitting light having the second wavelength range.

3. The system of claim **1**, wherein the first wavelength range does not overlap with the second wavelength range.

4. The system of claim **1**, wherein the second wavelength range includes wavelengths longer than those included in the first wavelength range.

5. The system of claim **1**, wherein the second wavelength range includes wavelengths shorter than those included in the first wavelength range.

6. The system of claim **1**, wherein the optical image sensor is sensitive to radiation within the first and second wavelength ranges.

7. The system of claim **1** further comprising a filter to separate at least some portion of radiation in the first wavelength range from radiation in the second wavelength range.

8. The system of claim **7**, wherein the filter passes radiation of the first wavelength range to some pixels of the optical image sensor, and passes radiation of the second wavelength range to other pixels of the optical image sensor.

9. The system of claim **1** further comprising a filter to selectively limit certain wavelengths of radiation from stimulating certain pixels of the optical image sensor.

10. A stylus comprising the system of claim **1**.

11. A stylus comprising an optical image sensor, the stylus configured to receive a first radiation having a first wavelength range and a second radiation in response to the first radiation having a second wavelength rangcJ range and direct the first radiation having the first wavelength range to a first pixel in the optical image sensor and the second radiation having the second wavelength range to a different second pixel in the optical image sensor.

* * * * *

UNITED STATES PATENT AND TRADEMARK OFFICE

CERTIFICATE OF CORRECTION

PATENT NO. : 9,075,452 B2
APPLICATION NO. : 14/178703
DATED : July 7, 2015
INVENTOR(S) : Craft

It is certified that error appears in the above-identified patent and that said Letters Patent is hereby corrected as shown below:

In the claims,

Column 21

Line 12, in claim 11, delete “rangcJ range” and insert -- range --

Signed and Sealed this
Ninth Day of February, 2016

Michelle K. Lee

Michelle K. Lee
Director of the United States Patent and Trademark Office