US009267651B2

(12) **United States Patent**
Tseng

(10) **Patent No.: US 9,267,651 B2**
(45) **Date of Patent: Feb. 23, 2016**

(54) **CHRISTMAS LIGHT APPARATUS AND LAMP BASE THEREOF**

(71) Applicant: **Wei-Jen Tseng**, Hsinchu County (TW)

(72) Inventor: **Wei-Jen Tseng**, Hsinchu County (TW)

(*) Notice: Subject to any disclaimer, the term of this patent is extended or adjusted under 35 U.S.C. 154(b) by 162 days.

(21) Appl. No.: **13/908,128**

(22) Filed: **Jun. 3, 2013**

(65) **Prior Publication Data**

US 2014/0355275 A1 Dec. 4, 2014

(30) **Foreign Application Priority Data**

Sep. 21, 2012 (CN) 2012 2 0488579

(51) **Int. Cl.**

H01R 33/00	(2006.01)
H01K 1/00	(2006.01)
H01K 1/46	(2006.01)
H01R 33/09	(2006.01)
H01R 24/00	(2011.01)
F21K 99/00	(2010.01)
F21S 4/00	(2006.01)
F21V 19/00	(2006.01)
F21V 23/06	(2006.01)
F21Y 101/02	(2006.01)

(52) **U.S. Cl.**

CPC . ***F21K 9/30*** (2013.01); ***F21S 4/001*** (2013.01); ***F21V 19/0025*** (2013.01); ***F21V 23/06*** (2013.01); ***H01R 33/09*** (2013.01); *F21Y 2101/02* (2013.01)

(58) **Field of Classification Search**

CPC F21W 2121/04; F21W 2121/004; F21W 2121/00; F21V 19/00; F21V 19/0005; H01R 33/09; H01R 33/22; H01R 4/18; H01R 33/965; H01R 4/185; F21S 4/001; H01K 1/46; H01K 9/00; H01J 5/56

USPC 362/654; 439/614, 619, 699.2

See application file for complete search history.

(56) **References Cited**

U.S. PATENT DOCUMENTS

6,019,483	A *	2/2000	Lin	362/653
6,595,657	B1 *	7/2003	Shieh	362/653
6,857,905	B2 *	2/2005	Shieh	439/619
7,063,452	B2 *	6/2006	Kuo	362/653
7,568,956	B1 *	8/2009	Tseng	439/699.2
7,575,362	B1 *	8/2009	Hsu	362/654
2003/0119374	A1 *	6/2003	Wang	439/699.1
2006/0258222	A1 *	11/2006	Tseng	439/620.1
2010/0254161	A1 *	10/2010	Liu et al.	362/654
2011/0074300	A1 *	3/2011	Hsu	315/185 S
2011/0122613	A1 *	5/2011	Hsu	362/231

* cited by examiner

Primary Examiner — Jong-Suk (James) Lee
Assistant Examiner — Erin Kryukova
(74) *Attorney, Agent, or Firm* — Ming Chow; Sinorica, LLC

(57) **ABSTRACT**

A Christmas light apparatus has a holder, multiple electrode pads, a lamp base and an LED lamp. The electrode pads are mounted on an inner surface of the holder. The lamp base is mounted in the holder and has a top body and a bottom body. The top body has a top hole. The bottom body has multiple bottom grooves communicating with the top hole of the top body. The LED lamp is mounted on the top body and has multiple pins. The pins pass through the bottom body and are respectively bent upward along the bottom grooves of the bottom body. To assemble the Christmas light apparatus is easy and fast. The pins are respectively and tightly pressed between the lamp base and the electrode pads, such that the pins can hardly be disconnected from the electrode pads.

10 Claims, 9 Drawing Sheets

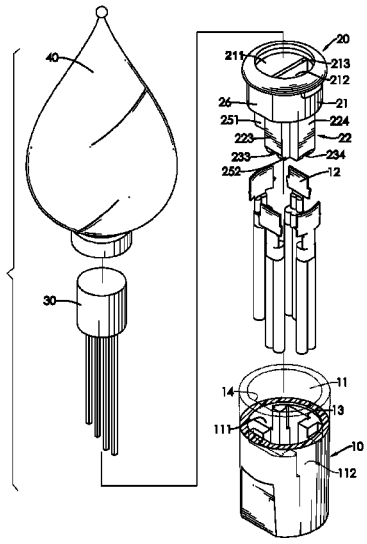

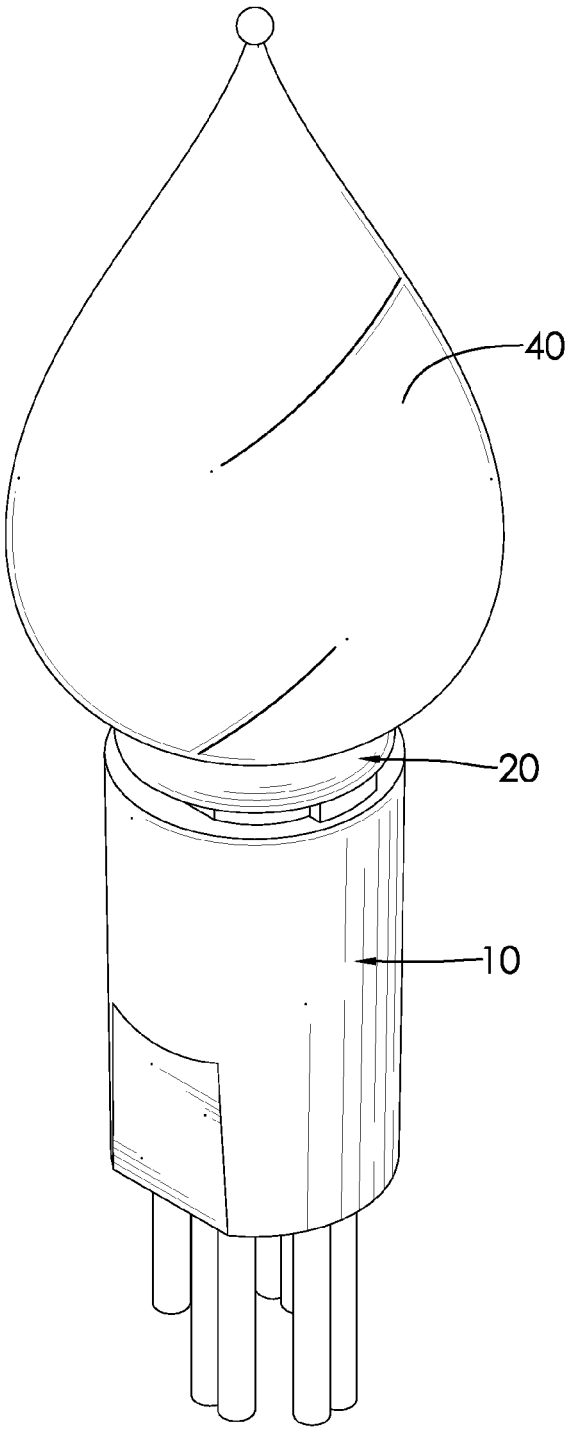

FIG. 1

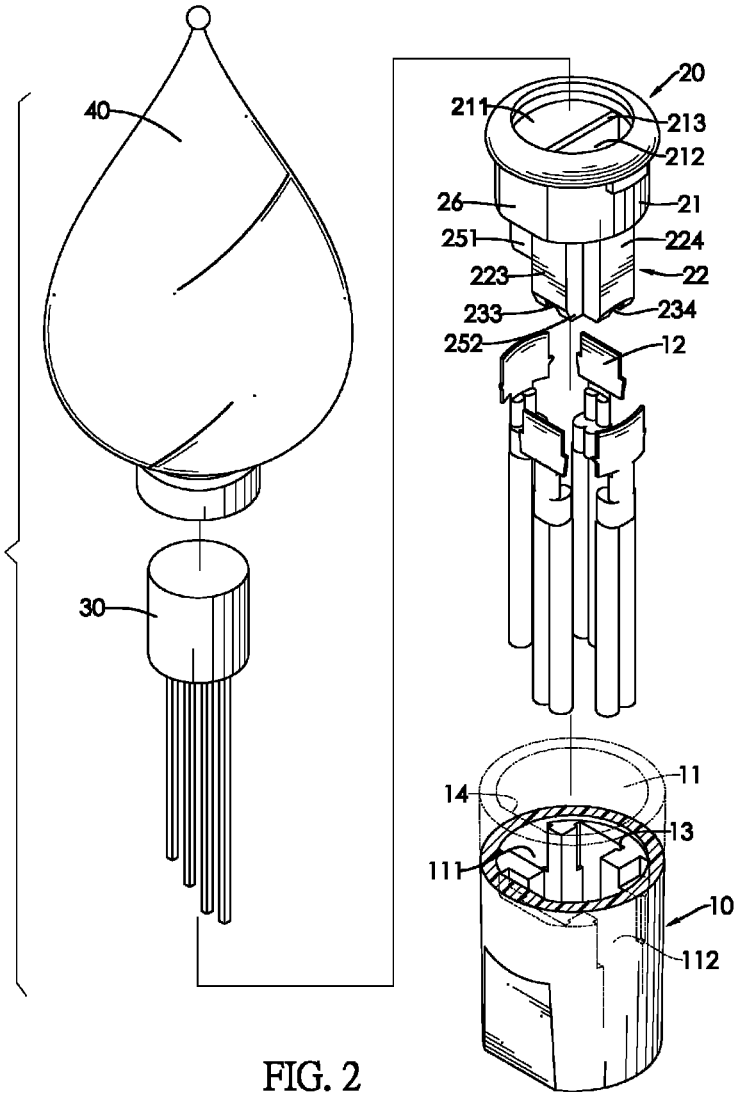
40
30
20
211
213
212
26
21
251
224
223
22
233
234
252
12
14
11
13
111
10
112

FIG. 2

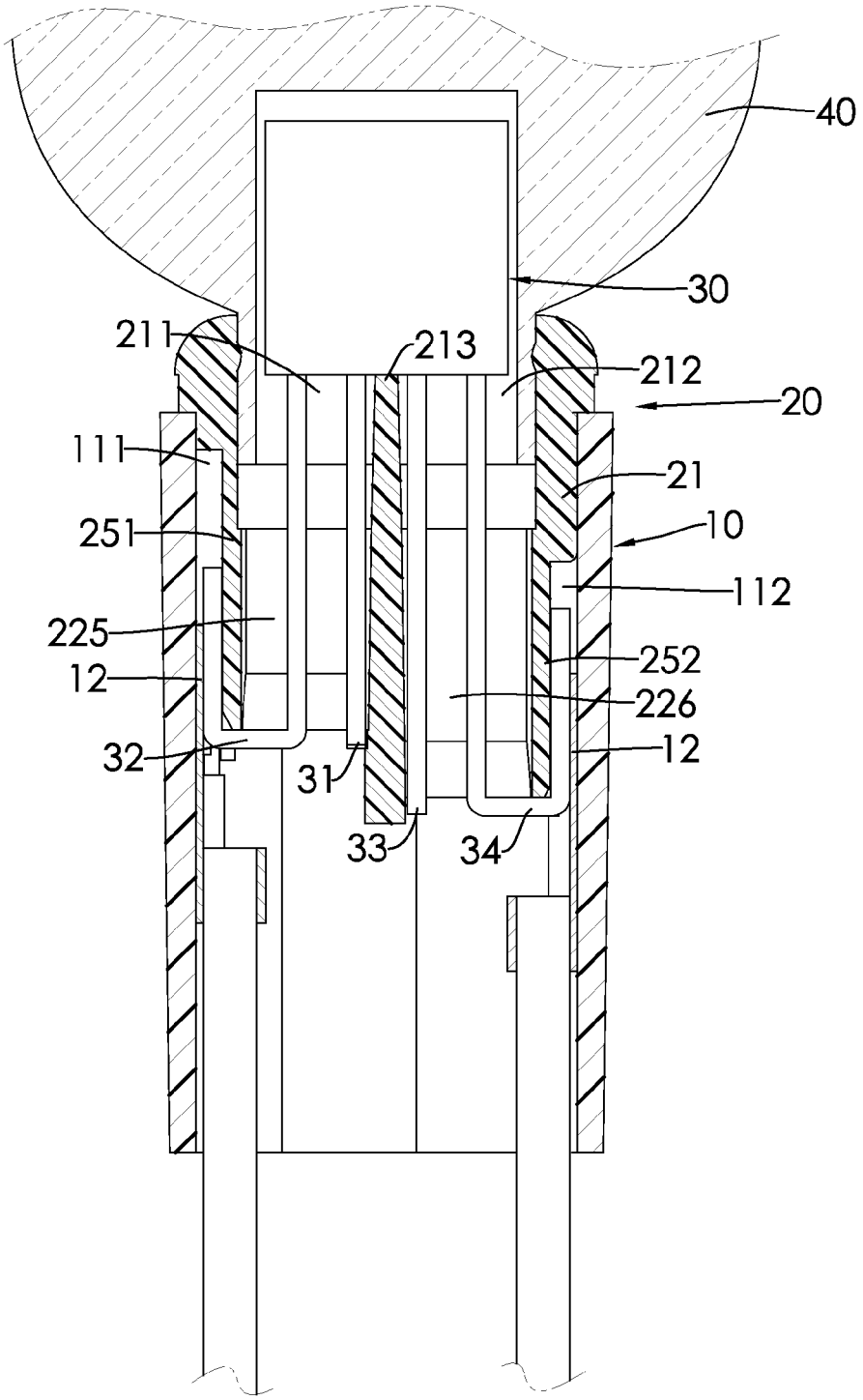

FIG. 3

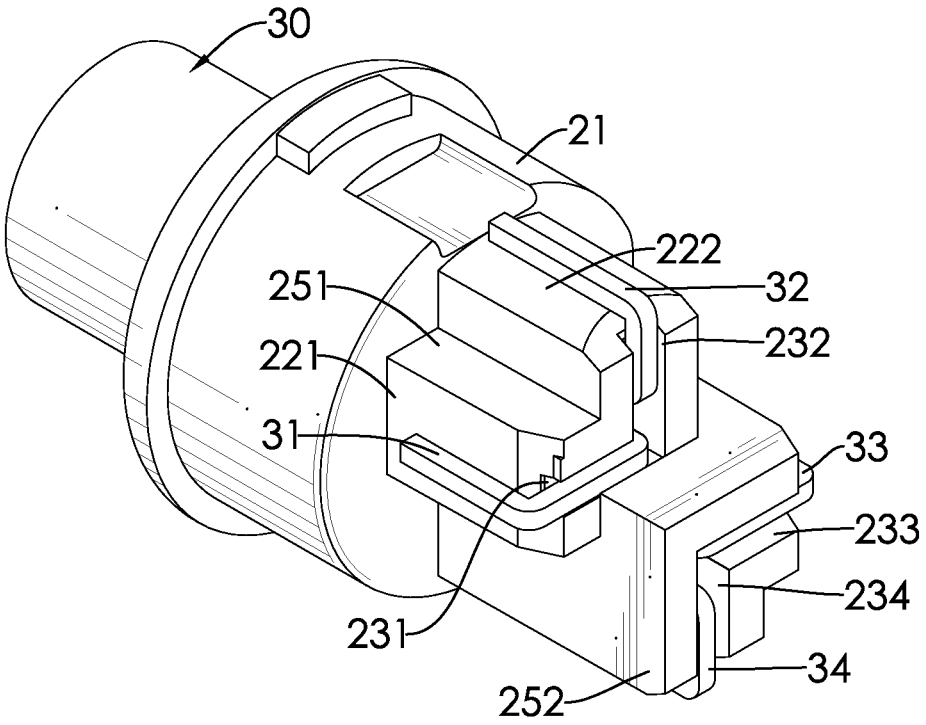

FIG. 4

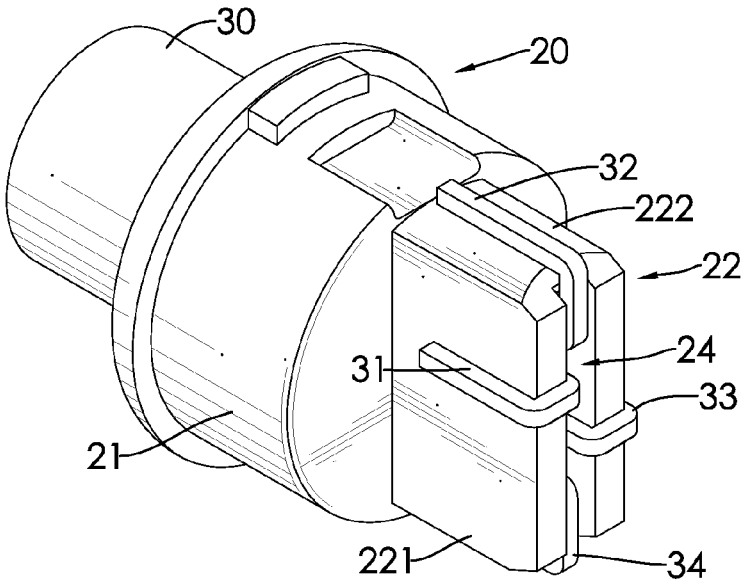

FIG. 5A

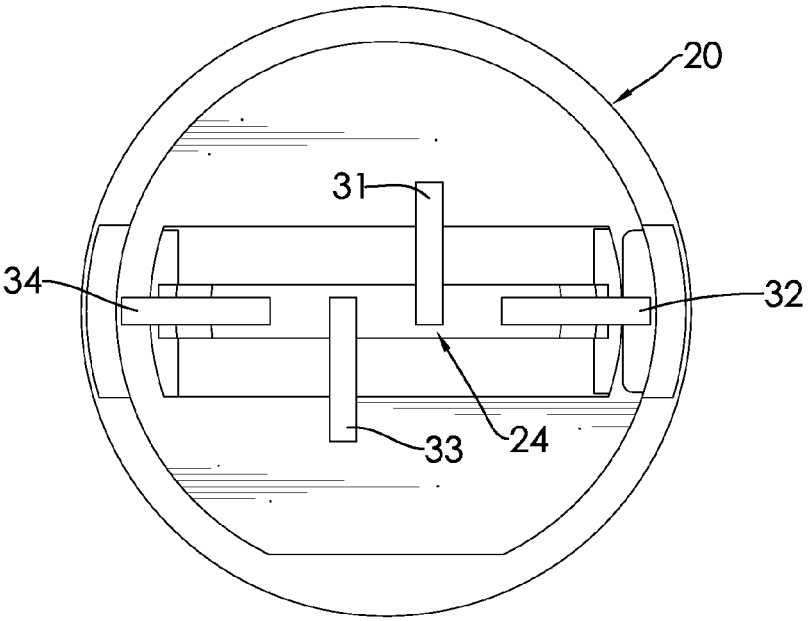

FIG. 5B

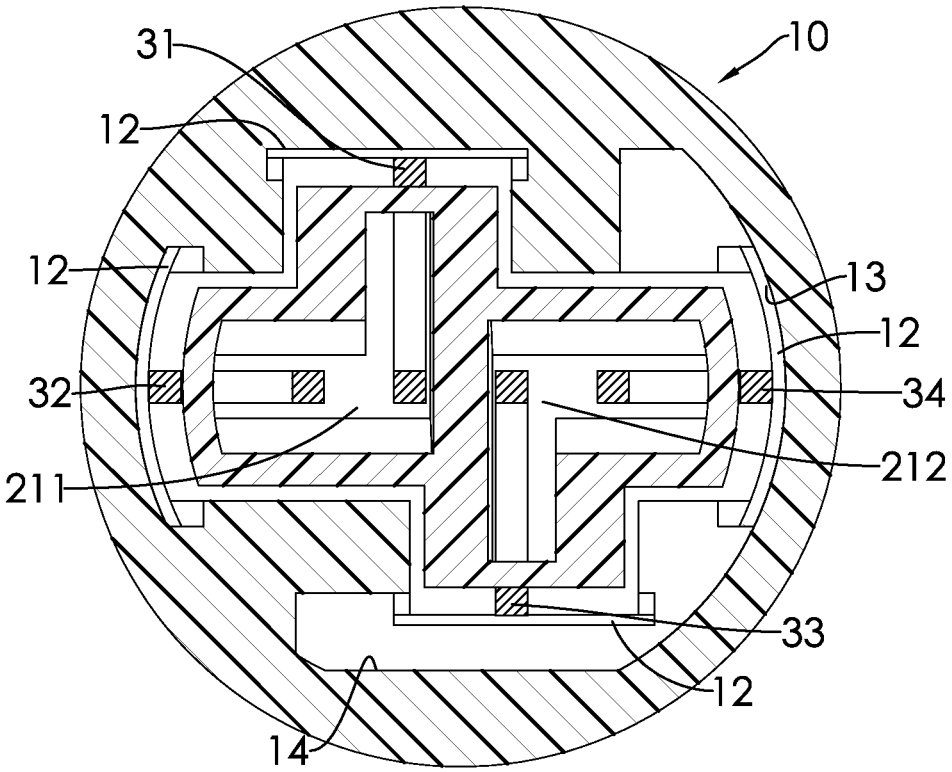

FIG. 6

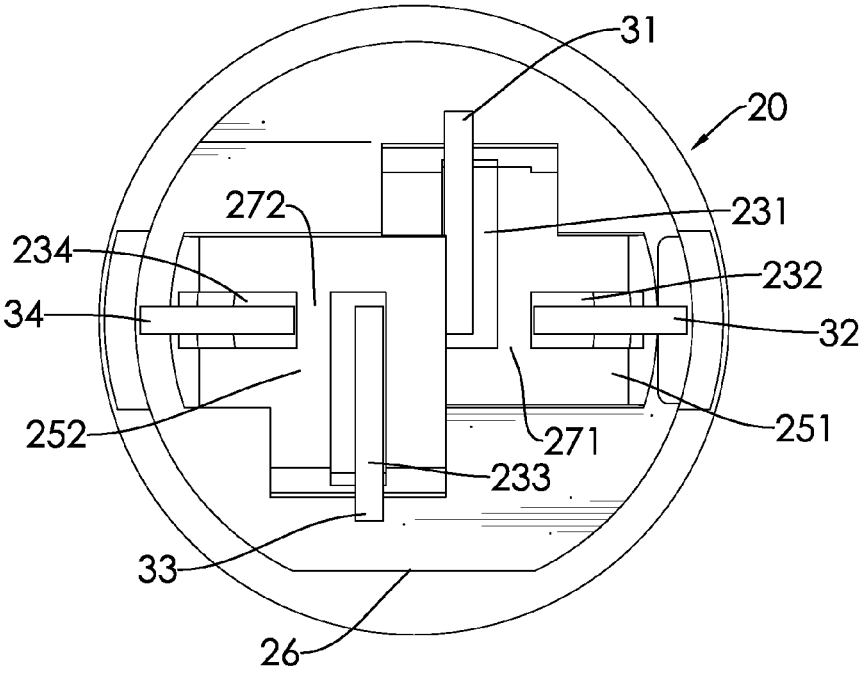
31
20
272
231
234
232
34
32
252
271
251
233
33
26

FIG. 7A

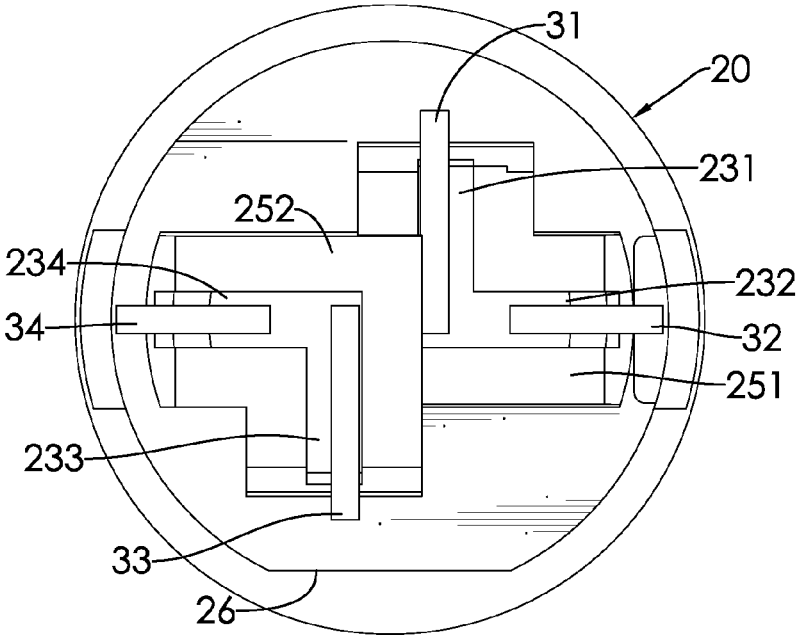
31
20
231
252
234
232
34
32
251
233
33
26

FIG. 7B

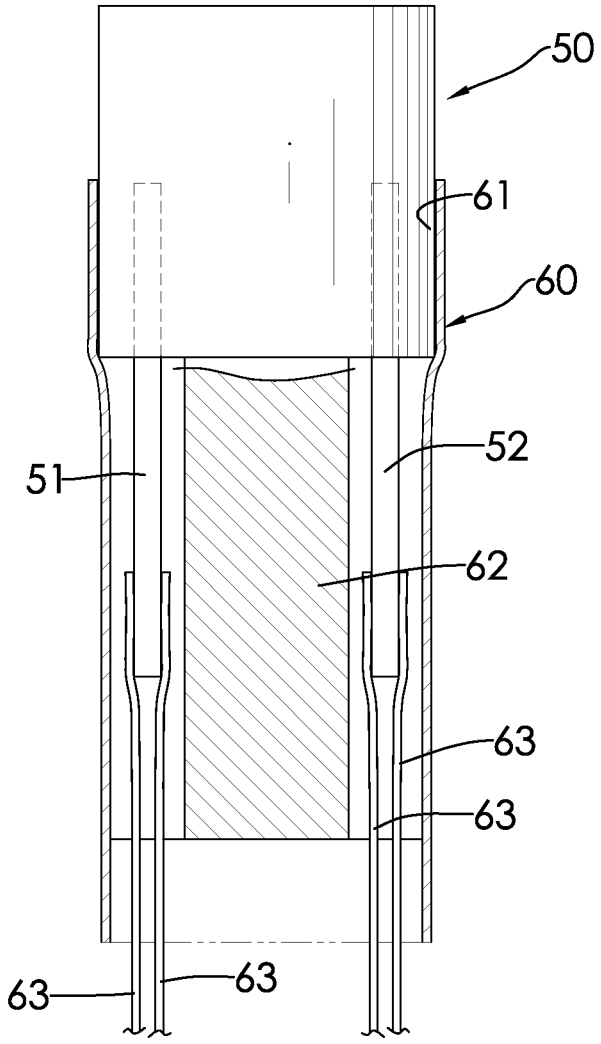

FIG. 8
PRIOR ART

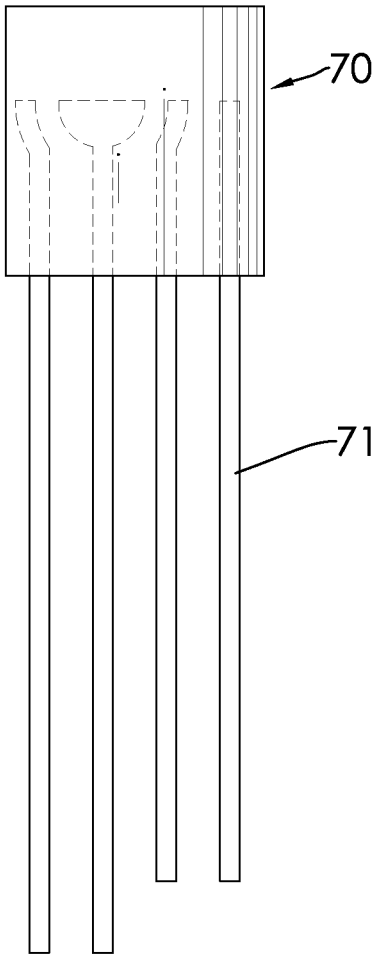

FIG. 9
PRIOR ART

CHRISTMAS LIGHT APPARATUS AND LAMP BASE THEREOF

CROSS-REFERENCE TO RELATED APPLICATIONS

This application claims the benefit of China patent application No. 201220488579.7, filed on Sep. 21, 2012, the disclosure of which is incorporated herein in its entirety by reference.

BACKGROUND OF THE INVENTION

1. Field of the Invention

The present invention relates to a light apparatus, and more particularly to a Christmas light apparatus and a lamp base thereof.

2. Description of Related Art

With reference to FIG. **8**, a conventional Christmas light apparatus is disclosed. The Christmas light apparatus has an LED device **50** and a holder **60**. The holder **60** has a space **61** and a partition **62** formed in the space **61**. The LED device **50** is mounted in the space **61** of the holder **60** and has a positive pin **51** and a negative pin **52**. The positive pin **51** and the negative pin **52** are separated by the partition **62**. Wires **63** are respectively welded to the positive pin **51** and the negative pin **52**. The LED device **50** displays a single color. The luminance performance of the Christmas light apparatus is monotonous. In response to this drawback, an LED lamp displaying multiple colors is developed.

With reference to FIG. **9**, an LED lamp that can display multiple colors is disclosed. The LED lamp has a package **70** and four pins **71**. Each pin **71** has a first end and a second end. The second ends of the pins **71** are mounted in the package **70**. The first ends of the pins **71** are adapted to be welded to wires. However, the LED lamp has too many pins **71**, such that welding the wires to the pins **71** is highly time-consuming.

Each pin **71** of the LED lamp has its own function. If a wire is welded to a wrong pin **71**, the LED lamp will be incorrectly activated with a wrong luminance color or will not be activated at all. In addition, since the wires are welded to the pins **71**, the wires are not securely connected to the pins **71** and are easily disconnected from the pins **71**. Hence, if the Christmas light apparatus is frequently hanged on and taken off a Christmas tree, the wires will be disconnected from the pins **71**. The Christmas light apparatus is then out of order.

SUMMARY OF THE INVENTION

An objective of the invention is to provide a Christmas light apparatus and a lamp base of the Christmas light apparatus to overcome the disadvantage that the wires are easily disconnected from the pins of the conventional Christmas light apparatus.

The Christmas light apparatus of the invention has:

a holder having an inner surface and a space;

multiple electrode pads mounted on the inner surface of the holder;

a lamp base mounted in the space of the holder and having:

a top body having a top hole; and

a bottom body extending from a bottom of the top body and having multiple bottom grooves communicating with the top hole of the top body; and

an LED lamp mounted on the top body of the lamp base and having multiple pins each respectively having a free end, wherein the free ends of the pins pass through the lamp base and are respectively bent upward along the bottom grooves of the bottom body to be respectively pressed between the lamp base and the electrode pads.

The lamp base of the invention has:

a top body having a top hole; and

a bottom body extending from a bottom of the top body and having multiple bottom grooves communicating with the top hole of the top body.

In conclusion, the pins of the LED lamp pass through the lamp base, extend from the bottom of the lamp base and are bent upward to be respectively pressed between the four surfaces of the lamp base and the electrode pads. The pins are then in close contact with the electrode pads. Hence, the LED lamp is securely mounted on the lamp base, and the pins of the LED lamp closely contact the electrode pads. The pins of the LED lamp can hardly be disconnected from the electrode pads, such that the Christmas light apparatus of the invention can be always normally activated.

In addition, an assembly worker mounts the LED lamp on the lamp base, bends the pins of the LED lamp upward and inserts the lamp base to the holder to complete assembly of the Christmas light apparatus of the invention, instead of welding wires to the pins of the LED lamp. Therefore, to assemble the Christmas light apparatus of the invention is easy and fast.

BRIEF DESCRIPTION OF THE DRAWINGS

FIG. **1** is a perspective view of a first embodiment of the Christmas light apparatus of the invention;

FIG. **2** is an exploded view of the first embodiment of the Christmas light apparatus of the invention;

FIG. **3** is a partially cross-sectional view of the first embodiment of the Christmas light apparatus of the invention;

FIG. **4** is a perspective view of the lamp base of the Christmas light apparatus of the invention;

FIG. **5**A is a perspective view of the lamp base with the LED lamp of a second embodiment of the Christmas light apparatus of the invention;

FIG. **5**B is a bottom view of the lamp base with the LED lamp of the second embodiment of the Christmas light apparatus of the invention;

FIG. **6** is a cross-sectional view of the first embodiment of the Christmas light apparatus of the invention;

FIG. **7**A is a bottom view of a third embodiment of the lamp base with the LED lamp of the Christmas light apparatus of the invention;

FIG. **7**B is a bottom view of the first embodiment of the lamp base with the LED lamp of the Christmas light apparatus of the invention;

FIG. **8** is a partially cross-sectional view of a conventional Christmas light apparatus; and

FIG. **9** is a plan view of another conventional Christmas light apparatus.

DETAILED DESCRIPTION OF THE PREFERRED EMBODIMENT

With reference to FIGS. **1**-**4**, a first embodiment of the Christmas light apparatus of the invention is disclosed. The Christmas light apparatus comprises a holder **10**, multiple electrode pads **12**, a lamp base **20** and an LED lamp **30**. The Christmas light apparatus can further comprises a cover **40**.

The holder **10** has an inner surface and a space **11**. The space **11** has a top opening. The inner surface has multiple pad recesses **13**.

The multiple electrode pads **12** are respectively mounted in the pad recesses **13**. In this embodiment, the inner surface of the holder **10** has four pad recesses **13**. Four electrode pads **12** are respectively mounted in the four pad recesses **13**.

The lamp base **20** is mounted in the space **11** of the holder **10**. The lamp base **20** has a top body **21** and a bottom body **22**. The top body **21** has a top hole. The top hole of the top body **21** is partitioned into a first space **211** and a second space **212**. In this embodiment, the top body **21** has a partition **213**. The top hole of the top body **21** is partitioned by the partition **213** into the first space **211** and the second space **212**.

The bottom body **22** extends from a bottom of the top body **21** and has a first surface **221**, a second surface **222**, a third surface **223**, a fourth surface **224**, at least one bottom hole and multiple bottom grooves. In this embodiment, the bottom body **22** has a first bottom hole **225**, a second bottom hole **226**, a first bottom groove **231**, a second bottom groove **232**, a third bottom groove **233** and a fourth bottom groove **234**. The four surfaces **221-224** respectively face toward the electrode pads **12** mounted on the inner surface of the holder **10**. The four bottom grooves **231-234** are formed in a bottom of the bottom body **22**. The first bottom hole **225** communicates with the first space **211** of the top body **21**, the first bottom groove **231** and the second bottom groove **232**. The second bottom hole **226** communicates with the second space **212** of the top body **21**, the third bottom groove **233** and the fourth bottom groove **234**. The positions of the bottom grooves **231-234** respectively correspond to the positions of the surfaces **221-224** of the bottom body **22**.

The LED lamp **30** is mounted on the top body **21** of the lamp base **20** and has multiple pins including a first pin **31**, a second pin **32**, a third pin **33** and a fourth pin **34**. The four pins **31-34** each respectively have a free end passing through the lamp base **20**. In this embodiment, the free ends of the first pin **31** and the second pin **32** pass through the first space **211** and the first bottom hole **225**. The free ends of the third pin **33** and the fourth pin **34** pass through the second space **212** and the second bottom hole **226**. The free ends of the four pins **31-34** are respectively bent upward along the four bottom grooves **231-234** and are respectively and tightly pressed between the surfaces **221-224** and the electrode pads **12**, such that the free ends of the pins **31-34** are respectively and electrically connected to the electrode pads **12** and the pins **31-34** are electrically insulated from each other. When the LED lamp **30** is activated, the LED lamp **30** can display multiple colors.

The cover **40** is mounted on the top body **21** of the lamp base **20** to cover and protect the LED lamp **30**.

With reference to FIGS. **5**A and **5**B, a second embodiment of the invention is disclosed. The bottom body **22** of the lamp base **20** has only one bottom hole **24**. The free ends of the four pins **31-34** of the LED lamp **30** pass through the bottom hole **24** and are bent upward to be respectively pressed between the surfaces of the bottom body and the electrode pads.

With reference to FIGS. **2**, **4** and **6**, the light apparatus of the invention has fool-proofing function. The bottom body **22** has a first pillar unit **251** and a second pillar unit **252**. The first surface **221** and the second surface **222** are formed on the first pillar unit **251** and in the first bottom hole **225**. The first bottom groove **231** and the second bottom groove **232** are formed in the first pillar unit **251**. The third surface **223** and the fourth surface **224** are formed on the second pillar unit **252** and in the second bottom hole **226**. The third bottom groove **233** and the fourth bottom groove **234** are formed in the second pillar unit **252**. A length of the second pillar unit **252** is longer than a length of the first pillar unit **251**. The third pin **33** and the fourth pin **34** are each correspondingly longer than the first pin **31** and than the second pin **32**.

With reference to FIG. **2**, the space **11** of the holder **10** includes a first hole **111** and a second hole **112**. A depth of the second hole **112** is deeper than a depth of the first hole **111**. The holder **10** may have a protrusion **14** formed in the space **11**. The top body **21** of the lamp base **20** has a fool-proofing notch **26**. The position of the protrusion **14** corresponds to the position of the fool-proofing notch **26**. When the lamp base **20** is mounted in the holder **10**, the first pillar unit **251** is inserted in the first hole **111** of the holder **10**, the second pillar unit **252** is inserted in the second hole **112** of the holder **10**, and the fool-proofing notch **26** of the lamp base **20** is aligned with the protrusion **14** of the holder **10**.

Hence, before an assembly worker assembles the lamp base **20** to the holder **10**, the assembly worker has to align the first pillar unit **251** with the first hole **111** of the holder **10**, align the second pillar unit **252** with the second hole **112** of the holder **10**, and align the protrusion **14** with the fool-proofing notch **26**, such that the assembly worker can correctly insert the lamp base **20** in the holder **10**. In addition, the pins **31-34** can contact the right pads **12**, such that incorrect assembly of the LED lamp **30** is prevented. The assembly worker can also observe the length of the pins **31-34** on the surfaces **221-224** to determine whether the LED lamp **30** is correctly mounted on the lamp base **20**.

When the first pillar unit **251** is incorrectly inserted in the second hole **112** and the second pillar unit **252** is incorrectly inserted in the first hole **111**, the lamp base **20** cannot be completely mounted in the holder **10**, such that the assembly worker can easily observe the lamp base **20** is not aligned with the holder **10**.

With reference to FIG. **7**A, a third embodiment of the invention is disclosed. With reference to FIG. **7**B, a bottom view of the first embodiment is disclosed. Comparing FIG. **7**A with FIG. **7**B, the first pillar unit **251** of the third embodiment has a first partition **271** formed between the first bottom groove **231** and the second bottom groove **232**. The second pillar unit **252** of the third embodiment has a second partition **272** formed between the third bottom groove **233** and the fourth bottom groove **234**. Therefore, the four pins **31-34** of the LED lamp **30** are securely separated by the partitions **271**, **272**. The electrical insulation of the pins **31-34** of the LED lamp **30** is further confirmed.

In conclusion, the LED lamp **30** is detachably mounted on the lamp base **20** and the lamp base **20** is detachably mounted in the holder **10**, such that the pins **31-34** of the LED lamp **30** can correctly contact the electrode pads **12**. The assembly worker can easily assemble the light apparatus of the invention. The pins **31-34** of the LED lamp **30** are tightly pressed between the bottom body **22** and the electrode pads **12** and can hardly be disconnected from the electrode pads **12**. The disadvantage that the pins of a conventional LED lamp are easily disconnected from wires melded to the pins is overcome.

What is claimed is:

1. A Christmas light apparatus comprising:

a holder having an inner surface and a space partitioned into a first hole and a second hole, wherein a depth of the second hole is deeper than a depth of the first hole;

multiple electrode pads mounted on the inner surface of the holder;

a lamp base mounted in the space of the holder and having:

a top body having a top hole; and

a bottom body extending from a bottom of the top body and having multiple bottom grooves communicating with the top hole of the top body;

at least one bottom hole communicating with the top hole of the top body and the bottom grooves;

a first pillar unit inserted into the first hole of the holder; and

a second pillar unit longer than the first pillar unit and inserted into the second hole of the holder; wherein

the multiple bottom grooves and the at least one bottom hole are formed in the first pillar unit and the second pillar unit; and

an LED lamp mounted on the top body of the lamp base and having multiple pins each respectively having a free end, wherein the free ends of the pins pass through the lamp base and are respectively bent upward along the bottom grooves of the bottom body to be respectively pressed between the lamp base and the electrode pads.

2. The Christmas light apparatus as claimed in claim **1**, wherein the top hole of the top body is partitioned to multiple spaces respectively communicating with the at least one bottom hole of the bottom body.

3. The Christmas light apparatus as claimed in claim **2**, wherein

the top body of the lamp base has a partition;

the top hole of the top body is partitioned by the partition into a first space and a second space;

the bottom grooves of the bottom body include a first bottom groove, a second bottom groove, a third bottom groove and a fourth bottom groove formed in a bottom of the bottom body;

the at least one bottom hole of the bottom body of the lamp base includes a first bottom hole and a second bottom hole;

the first bottom hole communicates with the first space of the top body, the first bottom groove, and the second bottom groove;

the second bottom hole communicates with the second space, the third bottom groove and the fourth bottom groove;

the multiple pins of the LED lamp includes:

a first pin and a second pin passing through the first space of the top body and the first bottom hole of the bottom body and being respectively bent upward along the first bottom groove and the second bottom groove; and

a third pin and a fourth pin passing through the second space of the top body and the second bottom hole of the bottom body and being respectively bent upward along the third bottom groove and the fourth bottom groove.

4. The Christmas light apparatus as claimed in claim **3**, wherein

the first bottom hole, the first bottom groove and the second bottom groove are formed in the first pillar unit; and

the second bottom hole, the third bottom groove and the fourth bottom groove are formed in the second pillar unit.

5. The Christmas light apparatus as claimed in claim **4**, wherein

the holder has a protrusion formed in the space; and

the top body of the lamp base has a fool-proofing notch aligned with the protrusion.

6. The Christmas light apparatus as claimed in claim **5**, wherein

a length of the first pin and a length of the second pin each respectively correspond to a length the first pillar unit; and

a length of the third pin and a length of the fourth pin each respectively correspond to a length the second pillar unit.

7. The Christmas light apparatus as claimed in claim **6**, wherein

the inner surface of the holder has multiple pad recesses; and

the multiple electrode pads are respectively mounted in the pad recesses.

8. The Christmas light apparatus as claimed in claim **7** further comprising a cover mounted on the top body of the lamp base to cover the LED lamp.

9. A lamp base having:

a top body having a top hole; and

a bottom body extending from a bottom of the top body and having

a first pillar unit;

a second pillar unit;

a first bottom hole, a first bottom groove, and a second bottom groove formed in the first pillar unit and communicating with the top hole of the top body;

a second bottom hole, a third bottom groove, and a fourth bottom groove formed in the second pillar unit and communicating with the top hole of the top body;

the top hole of the top body is partitioned to multiple spaces respectively communicating with the first bottom hole and the second bottom hole of the bottom body;

the top body of the lamp base has a partition;

the top hole of the top body is partitioned by the partition into a first space and a second space;

the first bottom groove, the second bottom groove, the third bottom groove and the fourth bottom groove are formed in a bottom of the bottom body;

the bottom body of the lamp base has the first bottom hole and the second bottom hole;

the first bottom hole communicates with the first space of the top body, the first bottom groove and the second bottom groove; and

the second bottom hole communicates with the second space, the third bottom groove, and the fourth bottom groove.

10. The lamp base as claimed in claim **9**, wherein the top body has a fool-proofing notch.

* * * * *