US009087650B2

(12) **United States Patent**
Ma et al.

(10) **Patent No.: US 9,087,650 B2**
(45) **Date of Patent: Jul. 21, 2015**

(54) **KEYCAP STRUCTURE**

(71) Applicant: **Primax Electronics Ltd.**, Neihu, Taipei (TW)

(72) Inventors: **Hui Ma**, Taipei (TW); **Chuang-Shu Jhuang**, Taipei (TW); **De-Guang Zhu**, Taipei (TW)

(73) Assignee: **PRIMAX ELECTRONICS LTD.**, Taipei (TW)

(*) Notice: Subject to any disclaimer, the term of this patent is extended or adjusted under 35 U.S.C. 154(b) by 177 days.

(21) Appl. No.: **13/867,930**

(22) Filed: **Apr. 22, 2013**

(65) **Prior Publication Data**

US 2014/0216905 A1 Aug. 7, 2014

(30) **Foreign Application Priority Data**

Feb. 1, 2013 (CN) 2013 1 0040945

(51) **Int. Cl.**
H01H 13/70 (2006.01)
H01H 3/12 (2006.01)

(52) **U.S. Cl.**
CPC ***H01H 3/122*** (2013.01); *H01H 3/125* (2013.01); *H01H 13/70* (2013.01)

(58) **Field of Classification Search**
CPC H01H 3/00; H01H 3/02; H01H 3/12; H01H 9/02; H01H 13/00; H01H 13/70; H01H 13/702; H01H 13/84; H01H 13/85; H01H 13/86; H01H 2003/00; H01H 2003/02; H01H 2003/12; H01H 2009/02; H01H 2201/00; H01H 2205/00; H01H 2205/004; H01H 2221/00; H01H 2223/00; H01H 2223/03; H01H 2231/002; H01H 2233/00; H01H 2233/002; H01H 2233/03; H01H 2233/07; H01H 2237/00; H01H 2237/004; H01H 2239/006; H01H 2239/076
USPC 200/343, 345, 318, 318.1, 329, 332, 200/333, 335, 337, 341, 344
See application file for complete search history.

(56) **References Cited**

U.S. PATENT DOCUMENTS

6,020,566 A * 2/2000 Tsai 200/344
8,188,387 B2 * 5/2012 Lo et al. ..... 200/5 A

* cited by examiner

Primary Examiner — Edwin A. Leon
Assistant Examiner — Anthony R. Jimenez
(74) *Attorney, Agent, or Firm* — Kirton McConkie; Evan R. Witt

(57) **ABSTRACT**

A keycap structure includes a reinforcement element and a keycap body. The reinforcement element includes two long segments and two short segments. The keycap body includes plural fixing parts and two protruding parts. The plural fixing parts are used for fixing two ends of each long segment of the reinforcement element. The two protruding parts are used for pushing the two short segments of the reinforcement element, so that the reinforcement element is subjected to deformation. Consequently, the reinforcement element generates a reacting force to push against the bilateral sides of the keycap body. Under this circumstance, the top surface of the keycap body is formed as a downwardly-concave arc-shaped surface, so that the shape of the keycap structure is effectively corrected.

8 Claims, 4 Drawing Sheets

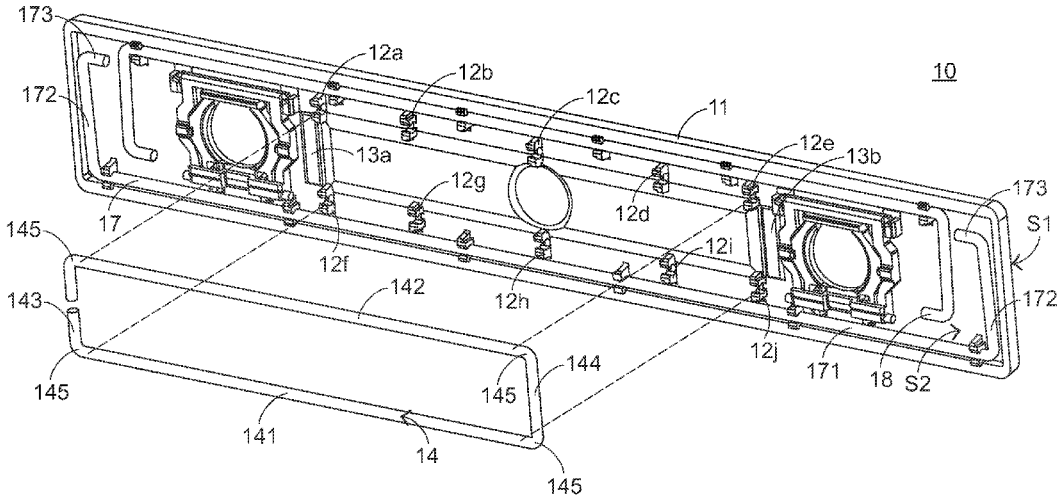

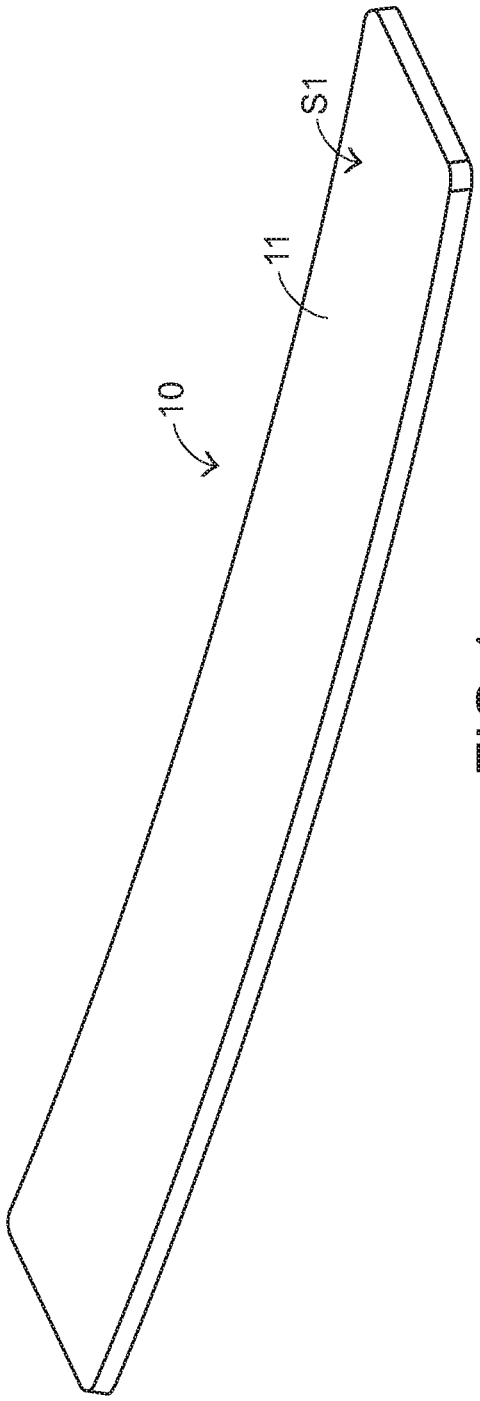

FIG.1

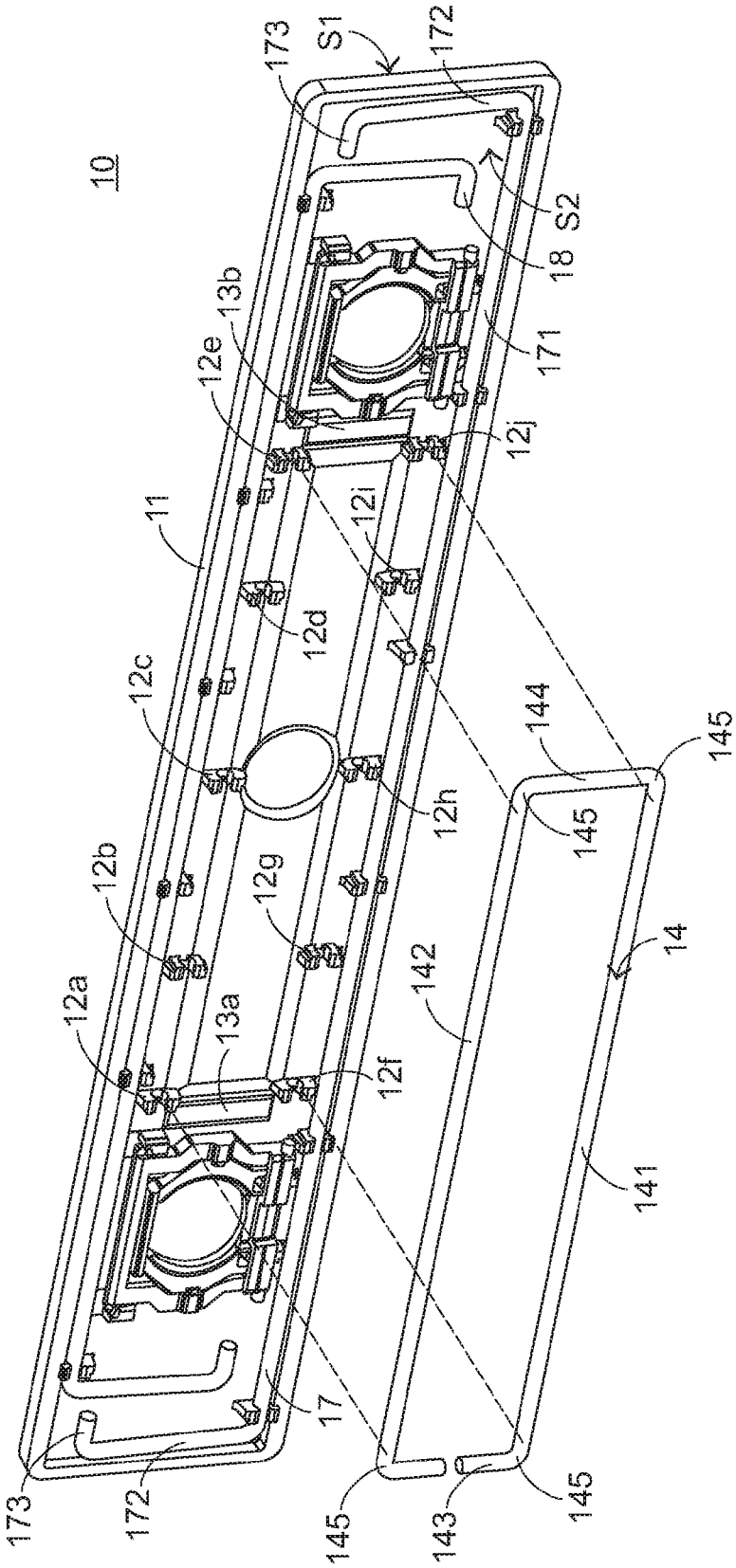
10
173
S1
172
S2
18
171
13b
12e
12j
11
12i
12d
12c
144
145
12h
145
12b
12g
14
142
12a
13a
12f
141
17
173
172
145
143
145

FIG.2

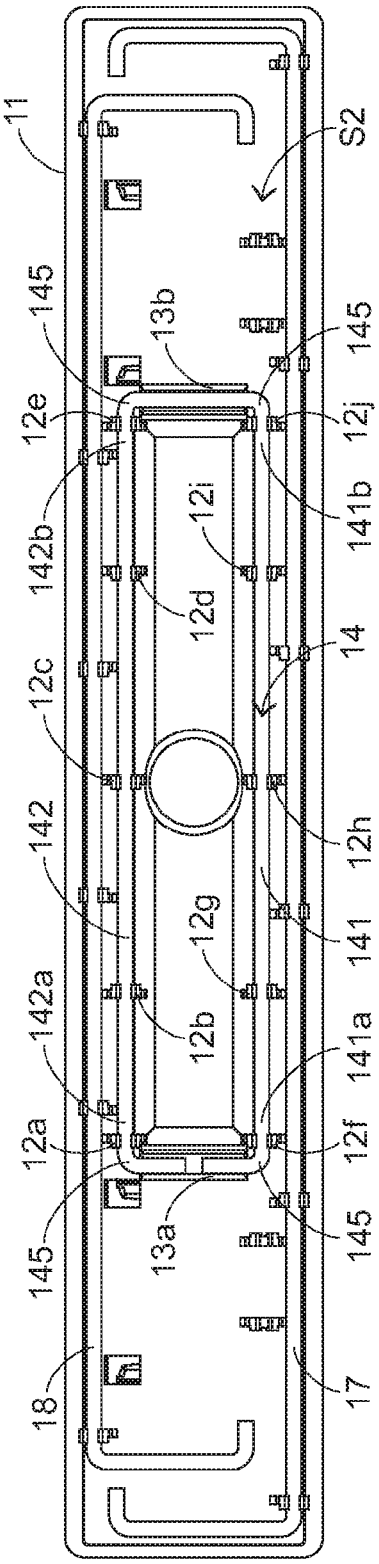
11
S2
145
13b
145
12e
12j
142b
12i
141b
12d
14
12c
12h
142
12g
141
142a
12b
141a
12a
12f
145
13a
145
18
17

FIG.3

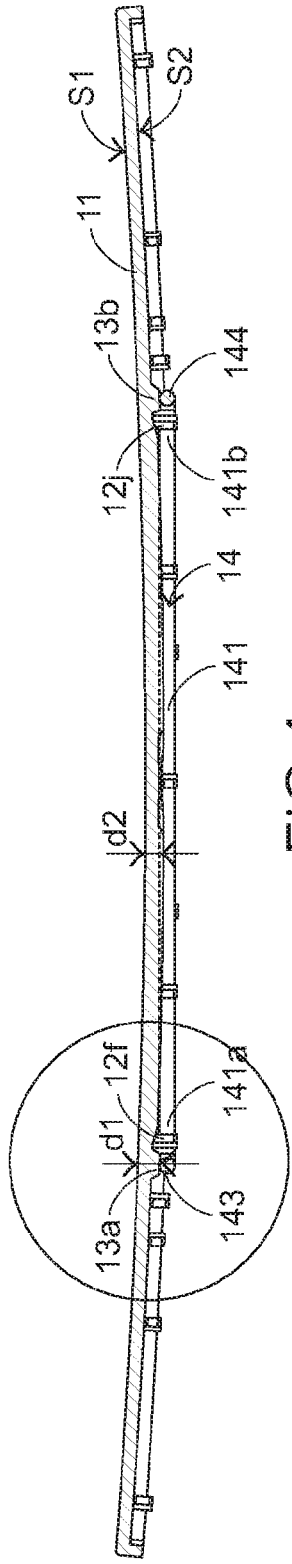
S1
S2
11
13b
144
12j
141b
14
141
d2
12f
141a
d1
13a
143

FIG.4

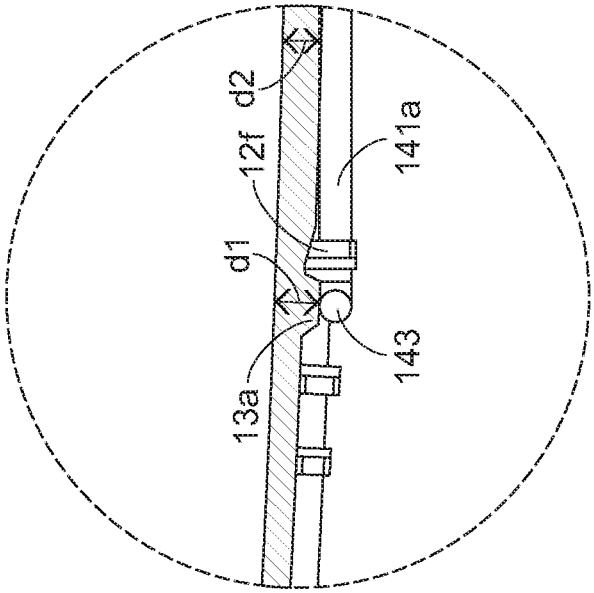

FIG.5

KEYCAP STRUCTURE

FIELD OF THE INVENTION

The present invention relates to a keycap structure, and more particularly to a keycap structure of a keyboard.

BACKGROUND OF THE INVENTION

For facilitating users to operate electronic devices, a variety of human interface devices are gradually introduced into the market. For example, a keyboard is a widely-used human interface device for controlling a computer. Generally, the keyboard is equipped with plural character keys and plural function keys for generating different signals. According to these signals, corresponding functions of the electronic device can be operated by the user. By depressing one of the character keys, a corresponding letter, number or symbol is inputted. By depressing one of the function keys, a corresponding function signal is generated. Moreover, the function key and a corresponding character key may be combined as a shortcut.

For providing better tactile feel of depressing the keycap of the key, the top surface of the keycap is specially designed to have a downwardly-concave arc-shaped surface for complying with the curvature of the user's fingertip. Moreover, some of the character keys and some of the plural function keys have elongated keycaps. For example, the key "0" of the numeric keypad zone, the enter key or the space key has the elongated keycap.

Since most keycaps are produced by a plastic ejection molding process, the elongated keycaps made of the plastic material may have some drawbacks. For example, since the elongated keycap has a relative long pressing surface, the structural strength of the elongated keycap is usually lower than the structural strength of the ordinary keycap. After the elongated keycap has been pressed for a long time, the elongated keycap is readily damaged. Moreover, since the plastic product is possibly suffered from deformation, the top surface of the elongated keycap may be changed from the downwardly-concave arc-shaped surface to an upwardly-convex arc-shaped surface. Under this circumstance, since the tactile feel of depressing the elongated keycap is deteriorated and the membrane switch under the elongated keycap is difficult to be conducted, the sensitivity of the key is impaired.

For overcoming the above drawbacks, there is a need of providing an improved keycap structure in order to enhance the structural strength of the elongated keycap and correct the deformed top surface of the elongated keycap from the upwardly-convex arc-shaped surface to the downwardly-concave arc-shaped surface.

SUMMARY OF THE INVENTION

The present invention provides a keycap structure capable of correcting the deformation.

In accordance with an aspect of the present invention, there is provided a keycap structure. The keycap structure includes a reinforcement element and a keycap body. The reinforcement element includes two long segments and two short segments. The keycap body is connected with the reinforcement element. The keycap body includes plural fixing parts and two protruding parts. The plural fixing parts are disposed on a bottom surface of the keycap body for fixing two ends of each long segment of the reinforcement element. The two protruding parts are disposed on the bottom surface of the keycap body for pushing the two short segments of the reinforcement element. Consequently, a distance between each short segment of the reinforcement element and a top surface of the keycap body is larger than a distance between each long segment of the reinforcement element and the top surface of the keycap body.

The above objects and advantages of the present invention will become more readily apparent to those ordinarily skilled in the art after reviewing the following detailed description and accompanying drawings, in which:

BRIEF DESCRIPTION OF THE DRAWINGS

FIG. **1** is a schematic perspective view illustrating a keycap structure according to an embodiment of the present invention;

FIG. **2** is a schematic exploded view illustrating the keycap structure of FIG. **1** and taken along another viewpoint;

FIG. **3** is a schematic bottom view illustrating the keycap structure according to the embodiment of the present invention;

FIG. **4** is a schematic cross-sectional view illustrating the keycap structure according to the embodiment of the present invention; and

FIG. **5** is a schematic enlarged fragmentary view illustrating the keycap structure of FIG. **4**.

DETAILED DESCRIPTION OF THE PREFERRED EMBODIMENT

Please refer to FIGS. **1** and **2**. FIG. **1** is a schematic perspective view illustrating a keycap structure according to an embodiment of the present invention. FIG. **2** is a schematic exploded view illustrating the keycap structure of FIG. **1** and taken along another viewpoint. As shown in FIGS. **1** and **2**, the keycap structure **10** comprises a keycap body **11**, a reinforcement element **14**, a first stabilizer bar **17**, and a second stabilizer bar **18**. The keycap body **11** comprises a top surface S**1**, a bottom surface S**2**, plural fixing parts **12***a*, **12***b*, **12***c*, **12***d*, **12***e*, **12***f*, **12***g*, **12***h*, **12***i* and **12***j*, and two protruding parts **13***a* and **13***b*.

The top surface S**1** and the bottom surface S**2** of the keycap body **11** are opposed to each other. The top surface S**1** of the keycap body **11** may be touched and pressed by the user's finger. The bottom surface S**2** of the keycap body **11** faces a base plate (not shown) of a keyboard. The reinforcement element **14**, the first stabilizer bar **17** and the second stabilizer bar **18** are connected with the bottom surface S**2** of the keycap body **11**.

The plural fixing parts **12***a*-**12***j* and the protruding parts **13***a* and **13***b* are all disposed on the bottom surface S**2** of the keycap body **11**. The plural fixing parts **12***a*-**12***j* are used for fixing the reinforcement element **14**. The protruding parts **13***a* and **13***b* are used for pushing the reinforcement element **14**. In this embodiment, the keycap body **11**, the plural fixing parts **12***a*-**12***j* and the protruding parts **13***a* and **13***b* are integrally formed with each other. Moreover, the plural fixing parts **12***a*-**12***j* are fixing recesses, but are not limited thereto.

The reinforcement element **14** comprises two long segments **141**, **142**, two short segments **143**, **144**, and plural bent parts **145**. The plural bent parts **145** are arranged between the long segments **141**, **142** and the short segments **143**, **144**. These bent parts **145** are connected with the long segments **141**, **142** and their adjacent short segments **143**, **144**. Consequently, the reinforcement element **14** is substantially a ring-shaped rod. In this embodiment, the reinforcement element **14** is a ring-shaped rod made of a material with high structural strength (e.g. a metallic material).

Since the keycap body **11** is made of a plastic material, the structural strength of the reinforcement element **14** is higher than the structural strength of the keycap body **11**. Moreover, since the reinforcement element **14** is disposed on the bottom surface S2 of the keycap body **11**, the reinforcement element **14** has the function of supporting the keycap body **11** and dispersing the force which is exerted on the keycap body **11**. Consequently, the use of the reinforcement element **14** can increase the structural strength of the keycap structure **10** and prolong the use of the keycap body **11**. Moreover, the use of the reinforcement element **14** can correct the deformation of the keycap body **11**. The way of correcting the deformation of the keycap body **11** by the reinforcement element **14** will be illustrated in more details as follows.

In this embodiment, the two long segments **141** and **142** of the reinforcement element **14** are parallel with each other, and the two short segments **143** and **144** of the reinforcement element **14** are parallel with each other. Moreover, the reinforcement element **14** is a non-closed and rectangular ring-shaped rod made of a metallic material, but is not limited thereto.

The structures and the installing purposes of the first stabilizer bar **17** and the second stabilizer bar **18** will be illustrated as follows. The first stabilizer bar **17** comprises a main bar part **171**, two lateral bar parts **172**, and two end bar parts **173**. The main bar part **171** of the first stabilizer bar **17** is longer than each of the lateral bar parts **172**. The two lateral bar parts **172** are located at two ends of the main bar part **171**, respectively. Moreover, a bent part is formed between the main bar part **171** and a first end of the corresponding lateral bar part **172**. The two end bar parts **173** are connected to second ends of the lateral bar parts **172**, respectively. Moreover, another bent part is formed between each end bar part **173** and the second end of the corresponding lateral bar part **172**.

The main bar part **171** of the first stabilizer bar **17** is fixed on the bottom surface S2 of the keycap body **11**. Moreover, the main bar part **171** is parallel with the long sides of the keycap body **11** for supporting the keycap body **11**. The two end bar parts **173** of the first stabilizer bar **17** is disposed on the base plate (not shown) of the keyboard for fixing the keycap body **11**. The structure of the second stabilizer bar **18** is substantially identical to the first stabilizer bar **17**. Moreover, the second stabilizer bar **18** is also parallel with the long sides of the keycap body **11**. However, a vacant space of the second stabilizer bar **18** and a vacant space of the first stabilizer bar **17** are oriented in opposite directions.

When the keycap body **11** is depressed to be descended, the first stabilizer bar **17** and the second stabilizer bar **18** can maintain the balance of the keycap body **11**. Consequently, the descending distances of the four corners of the keycap body **11** are equal. As known, if the descending distances of the four corners of the keycap body **11** are not equal, the keycap body **11** is tilted, and thus the tactile feel of depressing the keycap body **11** is unsatisfied. Since the descending distances of the four corners of the keycap body **11** are equal by using the keycap structure **10** of the present invention, the tactile feel is enhanced.

FIG. **3** is a schematic bottom view illustrating the keycap structure according to the embodiment of the present invention. Please refer to FIGS. **2** and **3**. The plural fixing parts **12***a*-**12***j* are disposed on the bottom surface S2 of the keycap body **11** for connecting the two long segments **141** and **142** of the reinforcement element **14**. Consequently, the reinforcement element **14** can be fixed on the bottom surface S2 of the keycap body **11** through the plural fixing parts **12***a*-**12***j*. In this embodiment, the fixing parts **12***a* and **12***e* are connected with the two ends **142***a* and **142***b* of the long segment **142** of the reinforcement element **14**, and located near the corresponding bent parts **145** of the reinforcement element **14**. Moreover, the fixing parts **12***f* and **12***j* are respectively connected with the two ends **141***a* and **141***b* of the long segment **141** of the reinforcement element **14**, and located near the bent parts **145** of the reinforcement element **14**.

The protruding parts **13***a* and **13***b* are disposed on the bottom surface S2 of the keycap body **11** for pushing the two short segments **143** and **144** of the reinforcement element **14**. As shown in FIG. **2**, the protruding parts **13***a* and **13***b* are disposed over the two short segments **143** and **144** of the reinforcement element **14**, respectively. In this embodiment, the protruding part **13***a* is parallel with the protruding part **13***b*. Moreover, the two protruding parts **13***a* and **13***b* are parallel with the two short segments **143** and **144** of the reinforcement element **14**, respectively. As shown in FIG. **2**, after the reinforcement element **14** is connected with the plural fixing parts **12***a*~**12***j*, the two short segments **143** and **144** of the reinforcement element **14** are respectively pushed by the two protruding parts **13***a* and **13***b* in order to provide acting forces to the two short segments **143** and **144** of the reinforcement element **14**.

Please refer to FIGS. **4** and **5**. FIG. **4** is a schematic cross-sectional view illustrating the keycap structure according to the embodiment of the present invention. FIG. **5** is a schematic enlarged fragmentary view illustrating the keycap structure of FIG. **4**. As shown in FIGS. **4** and **5**, the end **141***a* of the long segment **141** of the reinforcement element **14** is fixed on the fixing part **12***f* of the bottom surface S2 of the keycap body **11**, and the end **141***b* of the long segment **141** of the reinforcement element **14** is fixed on the fixing part **12***j* of the bottom surface S2 of the keycap body **11**.

Since the distance d**1** between the top side of the short segment **143** of the reinforcement element **14** and the top surface S1 of the keycap body **11** is larger than the distance d**2** between the long segment **141** of the reinforcement element **14** and the top surface S1 of the keycap body **11**, the short segment **143** of the reinforcement element **14** is pushed by the protruding part **13***a* of the bottom surface S2 of the keycap body **11** and the short segment **144** of the reinforcement element **14** is pushed by the protruding part **13***b*. In other words, by using the two ends **141***a* and **141***b* of the long segment **141** of the reinforcement element **14** as fulcrums, the two protruding parts **13***a* and **13***b* push downwardly against the short segments **143** and **144** of the reinforcement element **14** and exert acting forces on the short segments **143** and **144** of the reinforcement element **14**.

When the reinforcement element **14** is pushed by the protruding parts **13***a* and **13***b*, in response to the acting forces, the reinforcement element **14** generates a reacting force to push upwardly against the protruding parts **13***a* and **13***b* of the keycap body **11**. In response to the reacting force, the bilateral sides of the keycap body **11** are bent upwardly, so that the top surface S1 of the keycap body **11** is formed as the downwardly-concave arc-shaped surface. Under this circumstance, the tactile feel of depressing the keycap structure **10** to the user is enhanced, and the sensitivity of the keycap structure **10** of the corresponding key is increased.

From the above description, the present invention provides a keycap structure. The keycap structure comprises a keycap body and a reinforcement element. The keycap body comprises plural fixing parts and two protruding parts. The reinforcement element comprises two long segments and two short segments. The plural fixing parts are used for fixing two ends of each long segment of the reinforcement element. The two protruding parts are used for pushing the two short seg-

ments of the reinforcement element and exert acting forces on the short segments of the reinforcement element. In response to the acting forces, the reinforcement element generates a reacting force to push upwardly against the keycap body. In response to the reacting force, the top surface of the keycap body is formed as the downwardly-concave arc-shaped surface. The reinforcement element is capable of enhancing the structural strength of the keycap structure and correcting the deformed keycap structure to the downwardly-concave arc-shaped surface. Under this circumstance, the tactile feel of depressing the keycap structure to the user is enhanced, and the sensitivity of the keycap structure of the corresponding key is increased.

While the invention has been described in terms of what is presently considered to be the most practical and preferred embodiments, it is to be understood that the invention needs not be limited to the disclosed embodiment. On the contrary, it is intended to cover various modifications and similar arrangements included within the spirit and scope of the appended claims which are to be accorded with the broadest interpretation so as to encompass all such modifications and similar structures.

What is claimed is:

1. A keycap structure, comprising:

a reinforcement element comprising two long segments and two short segments; and

a keycap body connected with said reinforcement element, and comprising:

plural fixing parts disposed on a bottom surface of said keycap body for fixing thereto two ends of each long segment of said reinforcement element; and

two protruding parts protruding downward from said bottom surface of said keycap body and aligned with said two short segments, respectively;

wherein when said keycap body is pushed down, said two protruding parts urge against said two short segments of said reinforcement element, respectively, so that a top surface of said keycap body forms a downwardly-concave arc-shaped surface with a distance between each short segment of said reinforcement element and said top surface of said keycap body being larger than a distance between each long segment of said reinforcement element and said top surface of said keycap body.

2. The keycap structure according to claim **1**, wherein said two long segments are disposed opposite to each other, two short segments are disposed opposite to each other and connecting to said long segments with two ends thereof, and said reinforcement element lies under said keycap body with said two long segments and said two short segments being substantially at the same level.

3. The keycap structure according to claim **1**, wherein said reinforcement element is a ring-shaped rod made of a metallic material.

4. The keycap structure according to claim **1**, wherein said reinforcement element is a rectangular ring-shaped rod.

5. The keycap structure according to claim **1**, wherein said plural fixing parts are fixing recesses.

6. The keycap structure according to claim **1**, wherein said keycap body, said plural fixing parts and said two protruding parts are integrally formed with each other.

7. The keycap structure according to claim **1**, wherein said keycap structure further comprises a stabilizer bar, and said stabilizer bar is disposed on said bottom surface of said keycap body.

8. The keycap structure according to claim **7**, wherein said stabilizer bar is a metal bar.

* * * * *