US009150246B2

(12) **United States Patent**
Lee et al.

(10) **Patent No.: US 9,150,246 B2**
(45) **Date of Patent: Oct. 6, 2015**

(54) **ALGORITHM FOR STEERING ANGLE COMMAND TO TORQUE COMMAND CONVERSION**

(71) Applicant: **GM GLOBAL TECHNOLOGY OPERATIONS LLC**, Detroit, MI (US)

(72) Inventors: **Jin-Woo Lee**, Rochester Hills, MI (US); **Youssef A. Ghoneim**, Rochester, MI (US)

(73) Assignee: **GM Global Technology Operations LLC**, Detroit, MI (US)

(*) Notice: Subject to any disclaimer, the term of this patent is extended or adjusted under 35 U.S.C. 154(b) by 35 days.

(21) Appl. No.: **14/099,719**

(22) Filed: **Dec. 6, 2013**

(65) **Prior Publication Data**

US 2015/0158524 A1 Jun. 11, 2015

(51) **Int. Cl.**

A01B 69/00	(2006.01)
B62D 6/00	(2006.01)
B62D 6/08	(2006.01)

(52) **U.S. Cl.**

CPC . ***B62D 6/002*** (2013.01); ***B62D 6/08*** (2013.01)

(58) **Field of Classification Search**

USPC 701/41

See application file for complete search history.

(56) **References Cited**

U.S. PATENT DOCUMENTS

5,765,116	A	6/1998	Wilson-Jones et al.	
5,941,338	A *	8/1999	Miller et al.	180/421
6,425,454	B1 *	7/2002	Chabaan et al.	180/443
6,675,928	B2 *	1/2004	Takai et al.	180/422
8,108,134	B2	1/2012	Kageyama et al.	
8,170,751	B2	5/2012	Lee	
8,190,330	B2	5/2012	Lee	
8,589,028	B2	11/2013	Fujita et al.	
2003/0079933	A1 *	5/2003	Chabaan	180/446
2008/0047776	A1 *	2/2008	Kobayashi et al.	180/446
2010/0145575	A1	6/2010	Switkes et al.	
2012/0283910	A1	11/2012	Lee et al.	

* cited by examiner

Primary Examiner — Hussein A. Elchanti

(74) *Attorney, Agent, or Firm* — John A. Miller; Miller IP Group, PLC

(57) **ABSTRACT**

A system and method for converting a vehicle steering angle command to a vehicle steering torque command for a vehicle steering system in a vehicle. The method estimates a self-aligning torque that defines the torque that maintains a vehicle steering wheel at a neutral steering position or to a position that makes no slip angle at the road wheel, applies known total steering torque commands to the steering system at a plurality of sample time steps where the known steering torque commands include the self-aligning torque, and measures a vehicle steering angle at each time step. The method then models the steering system of the vehicle using the torque commands, the measured steering angles, a system delay and a plurality of unknown parameters.

20 Claims, 6 Drawing Sheets

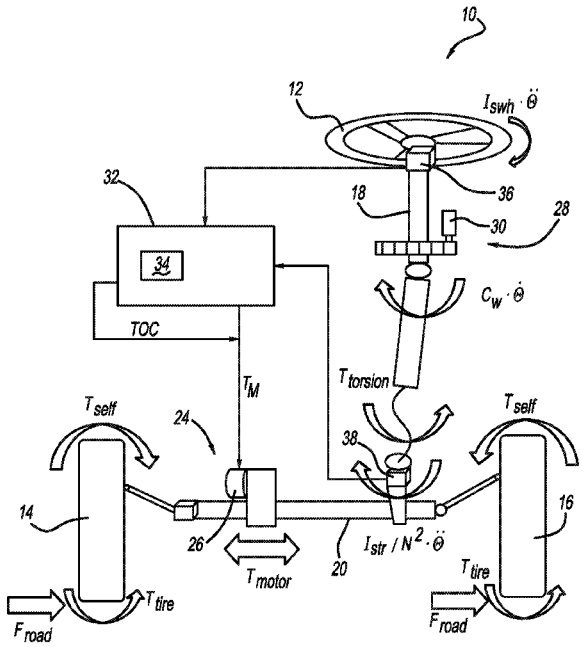

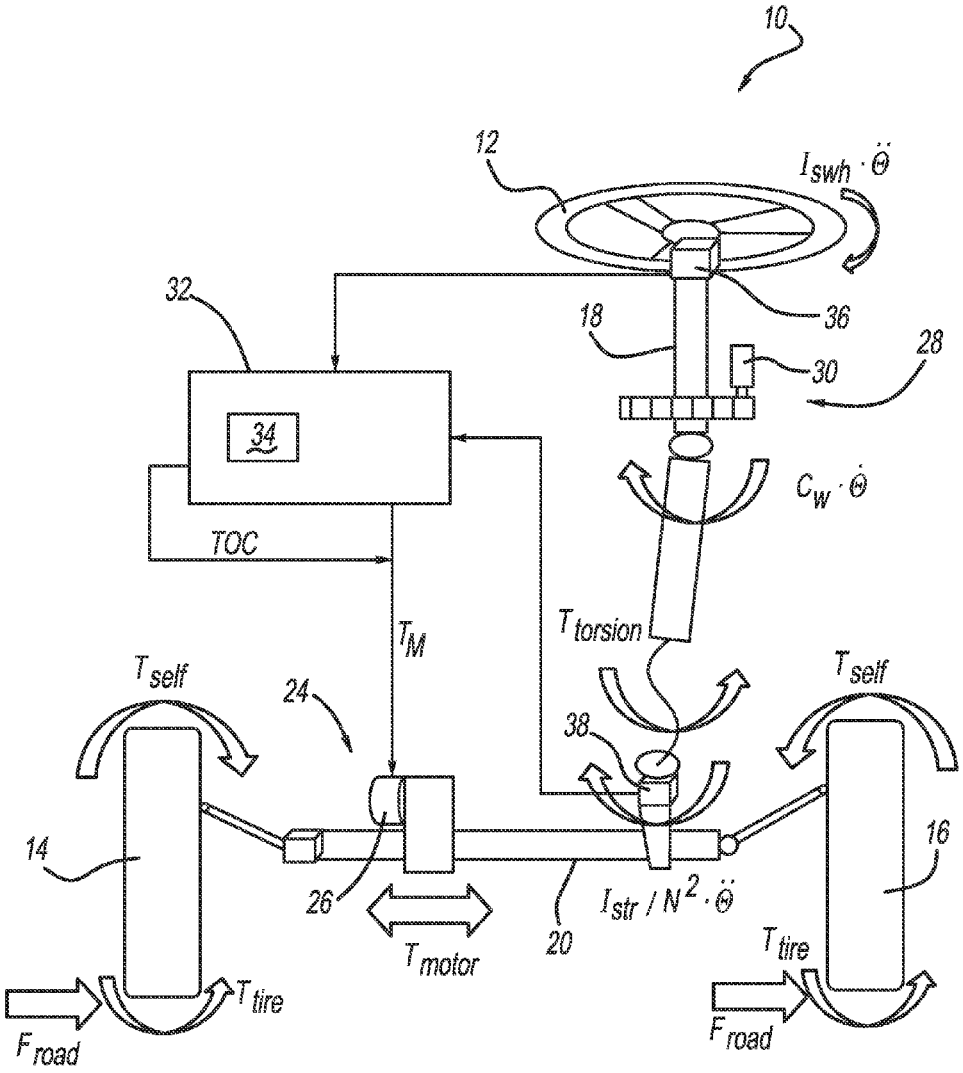
10
12
$I_{swh} \cdot \ddot{\Theta}$
32
36
18
28
30
34
$C_W \cdot \dot{\Theta}$
TOC
T_M
$T_{torsion}$
T_{self}
24
38
T_{self}
14
16
26
$I_{str} / N^2 \cdot \ddot{\Theta}$
20
T_{motor}
T_{tire}
T_{tire}
F_{road}
F_{road}

FIG - 1

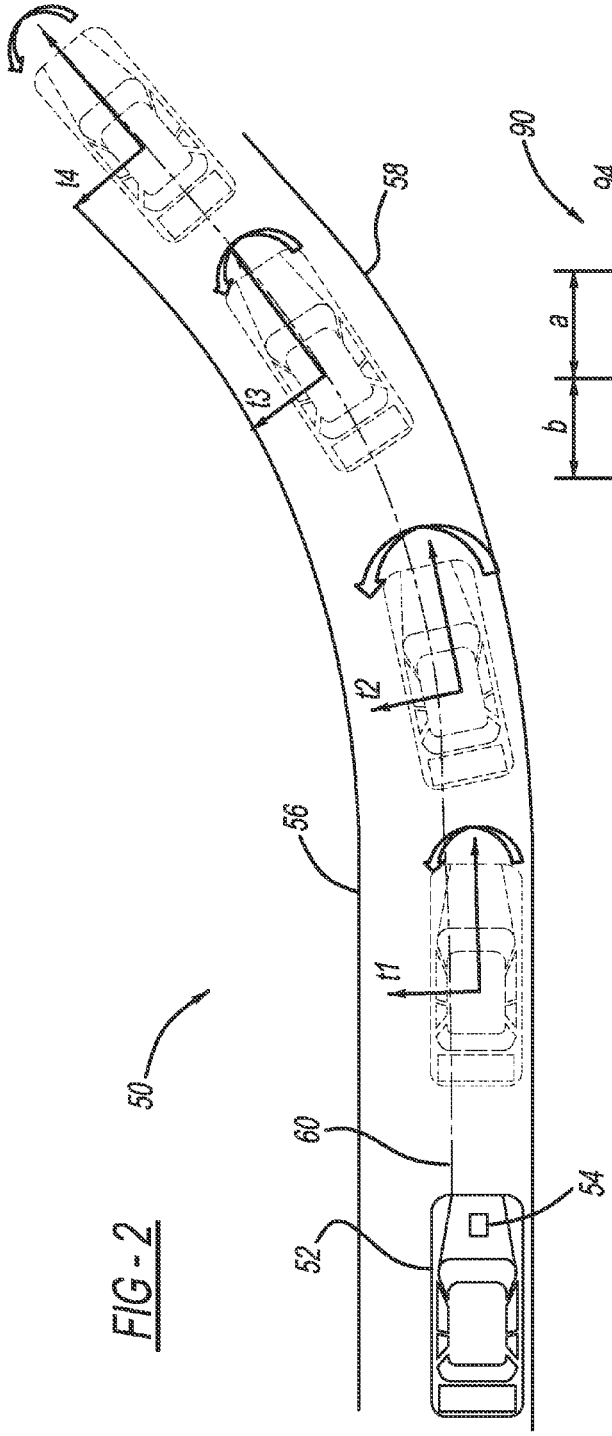

FIG - 2

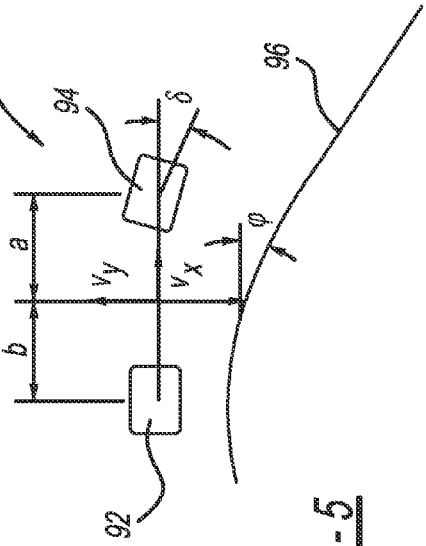

FIG - 5

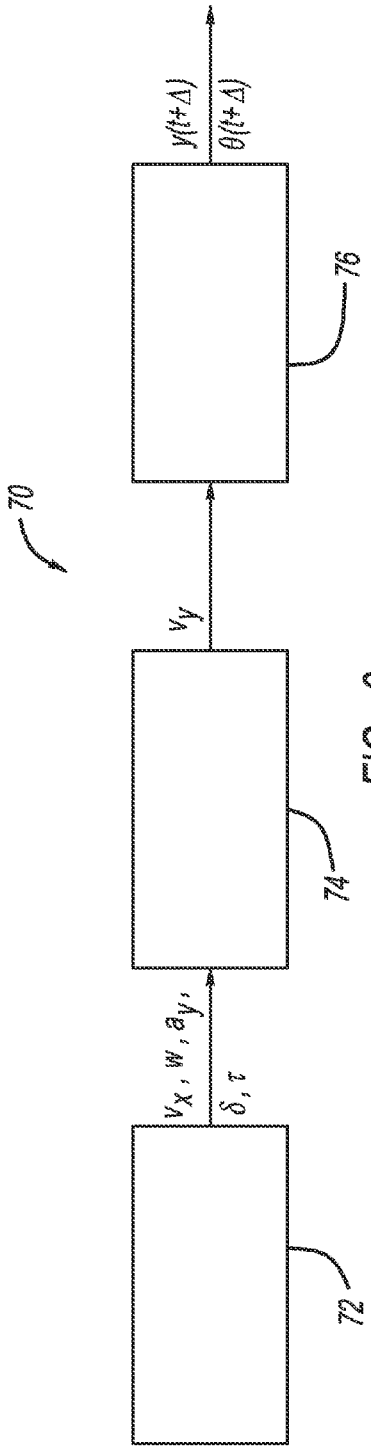

FIG - 3
(prior art)

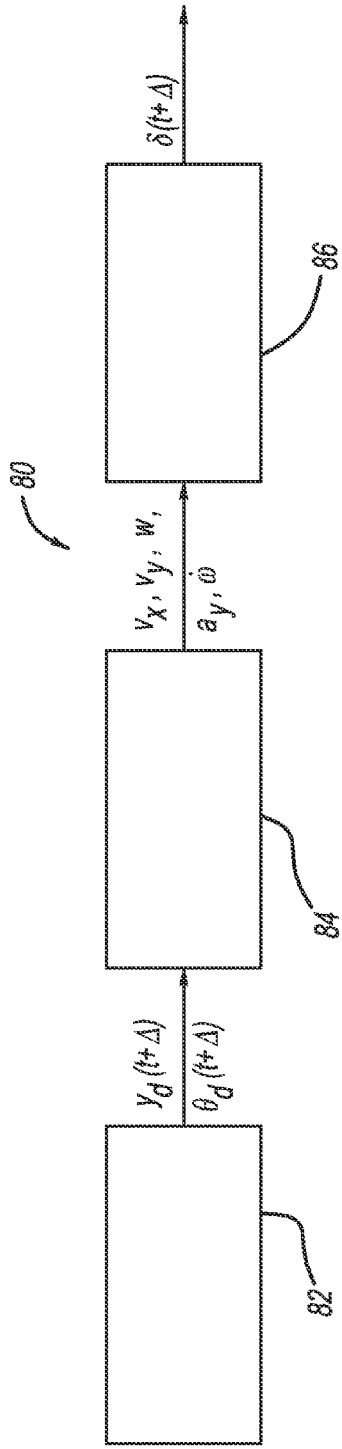

FIG - 4

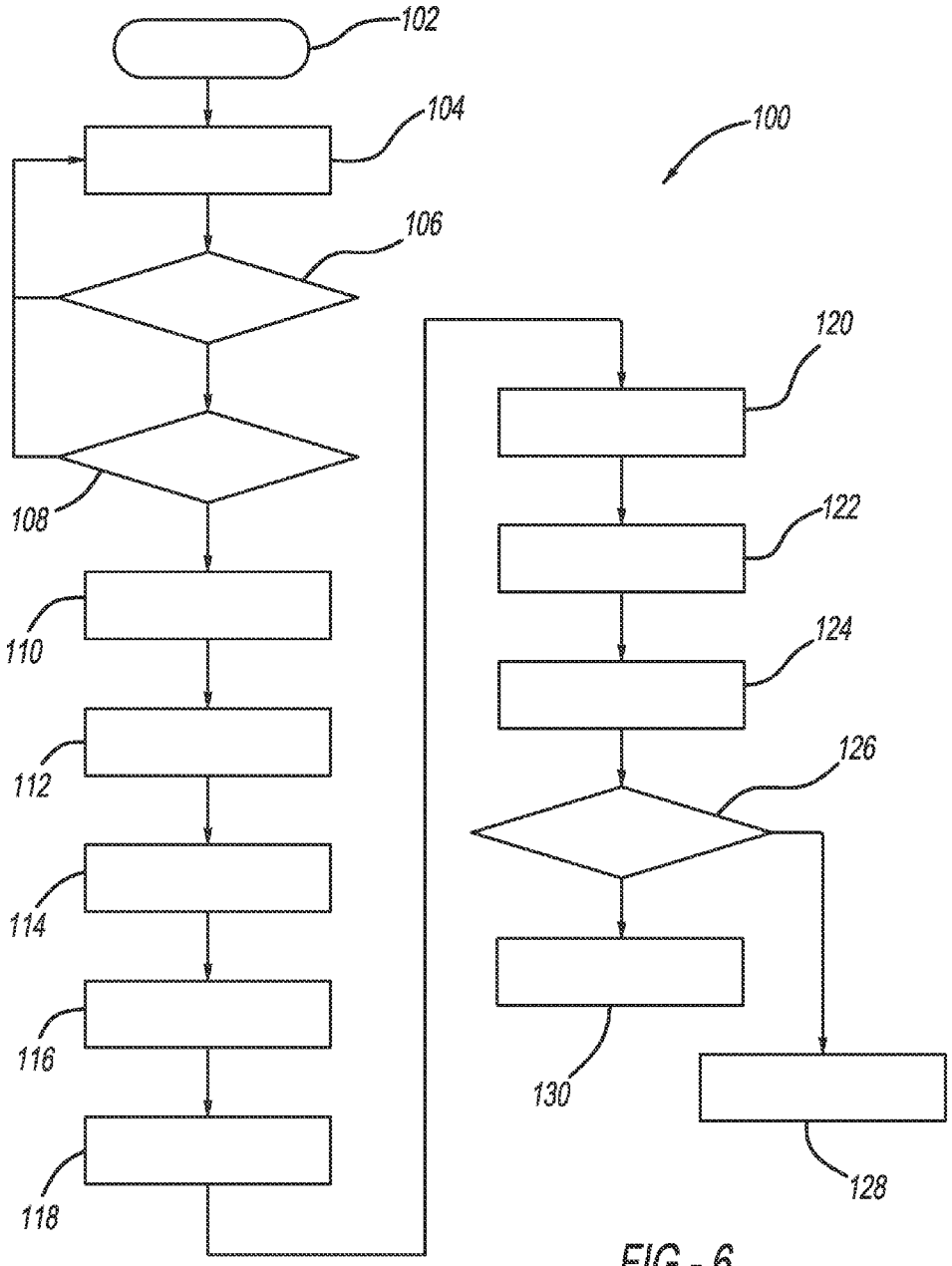

FIG - 6

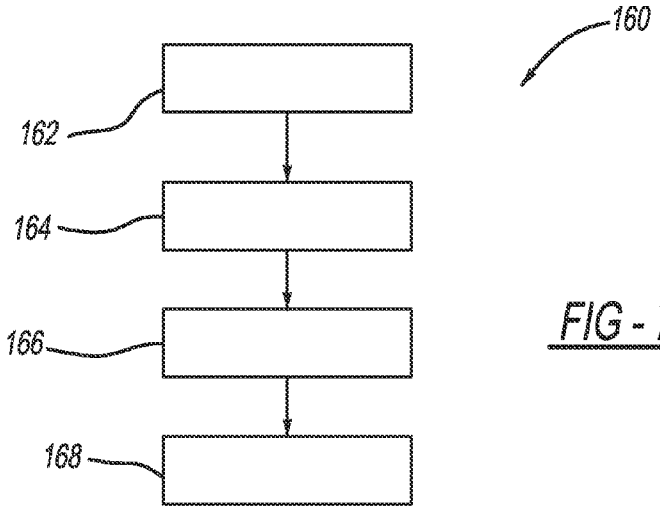

FIG - 7

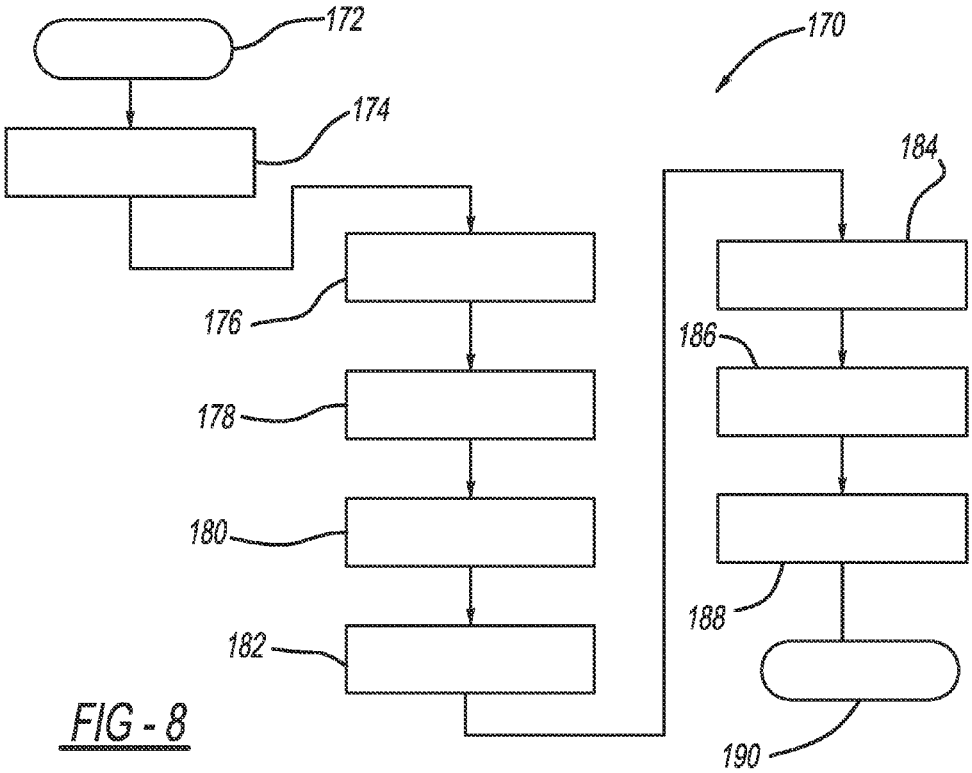

FIG - 8

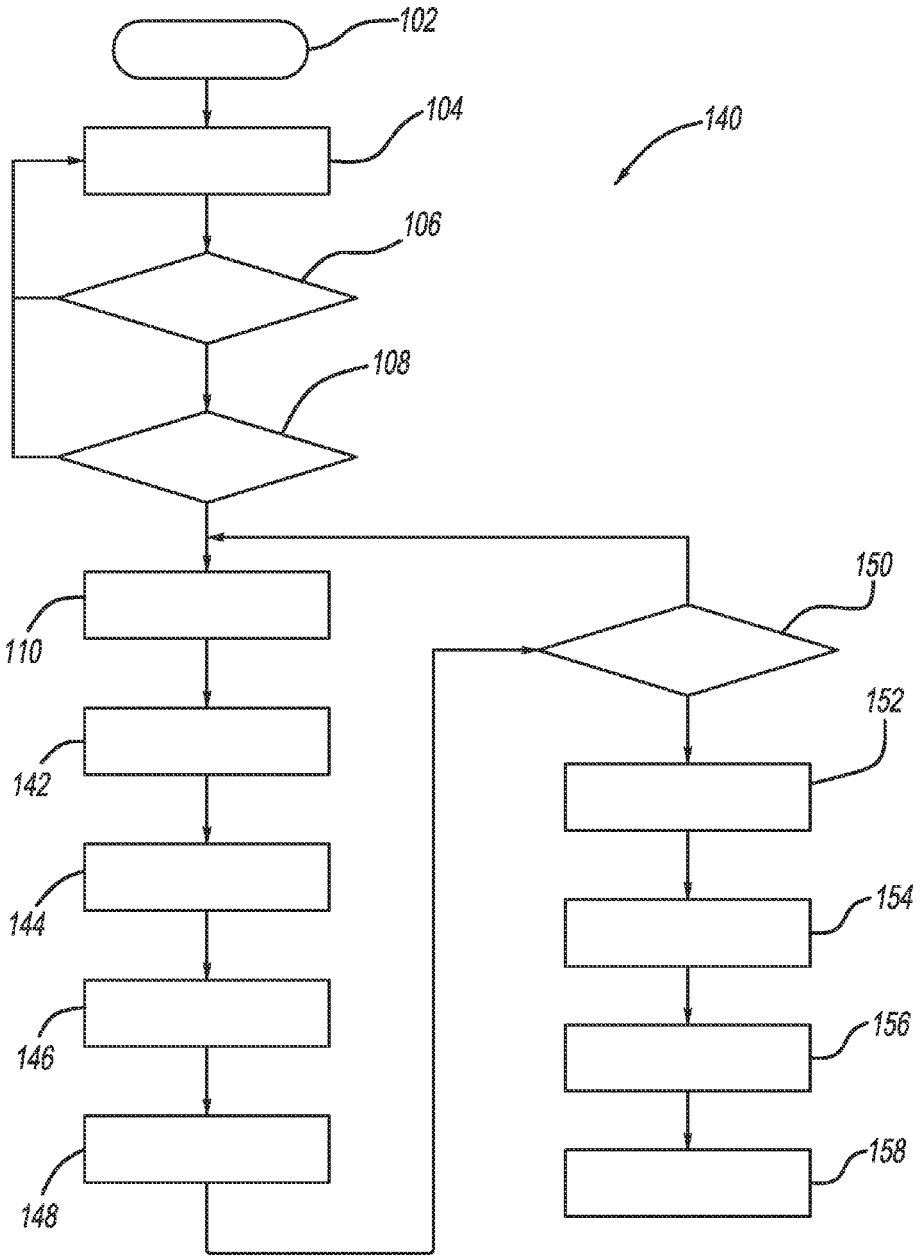

FIG - 9

ALGORITHM FOR STEERING ANGLE COMMAND TO TORQUE COMMAND CONVERSION

BACKGROUND OF THE INVENTION

1. Field of the Invention

This invention relates generally to a system and method for converting a steering angle command to a steering torque command and, more particularly, to a system and method for converting a steering angle command to a vehicle steering torque command that employs a steering model using data collected during development of the vehicle, where the model is updated in real time after deployment of the vehicle.

2. Discussion of the Related Art

The operation of modern vehicles is becoming more autonomous, i.e., vehicles are able to provide more driving control with less driver intervention. Cruise control systems have been on vehicles for a number of years where the vehicle operator can set a particular speed of the vehicle, and the vehicle will maintain that speed without the driver operating the throttle. Adaptive cruise control systems have been recently developed in the art where not only does the system maintain the set speed, but also will automatically slow the vehicle down in the event that a slower moving vehicle is detected in front of the subject vehicle using various sensors, such as radar, LiDAR and cameras. Modern vehicle control systems may also include autonomous parking where the vehicle will automatically provide the steering control for parking the vehicle, and where the control system will intervene if the driver makes harsh steering changes that may affect vehicle stability and lane centering capabilities, where the vehicle system attempts to maintain the vehicle near the center of the lane. Fully autonomous vehicles have been demonstrated that drive in simulated urban traffic up to 30 mph, while observing all of the rules of the road.

As vehicle systems improve, they will become more autonomous with the goal being a completely autonomously driven vehicle. Future vehicles will likely employ autonomous systems for lane changing, lane keeping, lane centering, passing, turns away from traffic, turns into traffic, etc. As these systems become more prevalent in vehicle technology, it will also be necessary to determine what the driver's role will be in combination with these systems for controlling vehicle speed, steering and overriding the autonomous system.

An examples of semi-autonomous vehicle control systems can be found in U.S. Pat. No. 8,190,330, issued May 29, 2012, titled "Model Based Predictive Control for Automated Lane centering/changing control systems," assigned to the assignee of this application and herein incorporated by reference, which discloses a system and method for providing steering angle control for lane centering and lane changing purposes in an autonomous or semi-autonomous vehicle. U.S. Pat. No. 8,170,751, issued May 1, 2012, titled "Detection of Driver Intervention During a Torque Overlay Operation in an Electric Power Steering System," assigned to the assignee of this application and herein incorporated by reference, discloses a system and method for controlling vehicle steering by detecting a driver intervention in a torque overly operation.

As mentioned, lane centering and/or lane keeping systems have been demonstrated in the art that cause the vehicle to autonomously follow the vehicle travel lane. Current lane centering and lane keeping controllers typically have a maximum steering torque limit, for example, 3 Newton-meters, for safety purposes. However, under certain driving conditions, such as driving at highway speeds and negotiating a turn having a relative tight radius of curvature, such as 500 meters, the steering torque limit is not high enough to maintain the vehicle in the lane. Particularly, under these types of conditions, the vehicle steering needs more than 3 Newton-meters of steering torque to stay within the lane. Because that amount of torque is beyond what the lane centering system can provide, the lane centering and/or lane keeping algorithms must address this situation. Current lane centering and lane keeping controllers often employ lane departure warnings when the vehicle begins traveling outside of the lane. Because the vehicle driver may not be fully attentive during autonomous vehicle driving, any lane departure warning given by the system when the vehicle is leaving the lane may be too late for the vehicle operator to take over control of the vehicle and stay within the lane. Therefore, there is a need in the art to provide a warning in advance of this situation so that the driver can adequately respond.

The discussion above refers to determining steering torque for lane keeping purposes. A typical lane keeping or lane changing control algorithm calculates vehicle steering angle as a command to steer the vehicle and not steering torque. However, most steering systems, for example, electrical power steering (EPS) systems, typically only accept steering torque as a command. Therefore, these systems require some technique for converting steering angle to steering torque. An inaccurate conversion of steering angle to steering torque may cause vehicle oscillations during a lane control maneuver. Current steering models are generally not applicable for converting steering angle to steering torque in lane control algorithms because of limited computing power, the non-existence of suitable sensors and the inaccuracy of the angle to torque conversions for stop and go situations. Thus, there is a need in the art to effectively convert a steering angle command to a steering torque command in these types of lane control systems.

SUMMARY OF THE INVENTION

This disclosure describes a system and method for converting a vehicle steering angle command to a vehicle steering torque command for a vehicle steering system in a vehicle. The method estimates a self-aligning torque that defines the torque that maintains a vehicle steering wheel at a neutral steering position or at a position that makes no slip angle at the road wheel, applies known total steering torque commands to the steering system at a plurality of sample time steps where the known steering torque commands include the self-aligning torque, and measures a vehicle steering angle at each time step. The method then models the steering system of the vehicle using the torque commands, the measured steering angles, a system delay and a plurality of unknown parameters.

Additional features of the present invention will become apparent from the following description and appended claims, taken in conjunction with the accompanying drawings.

BRIEF DESCRIPTION OF THE DRAWINGS

FIG. **1** is an illustration of an exemplary vehicle steering system;

FIG. **2** is an illustration of a subject vehicle traveling in a vehicle lane having a curve;

FIG. **3** is a flow block diagram showing a known process for predicting a vehicle path;

FIG. **4** is a flow block diagram showing a process for determining a vehicle steering angle;

FIG. **5** is an illustration showing vehicle lateral dynamics;

FIG. **6** is a flow chart diagram showing a process for determining whether to issue a driver alert if a lane centering/lane keeping system requires a steering torque that exceeds the maximum torque limit;

FIG. **7** is a flow chart diagram showing an overview of a process for developing a steering model for converting steering angle to the steering torque;

FIG. **8** is a flow chart diagram showing an off-line part of the process depicted in FIG. **7**; and

FIG. **9** is a flow chart diagram showing a process for updating the steering model depicted in FIG. **7** in real-time.

DETAILED DESCRIPTION OF THE EMBODIMENTS

The following discussion of the embodiments of the invention directed to a system and method for converting a vehicle steering angle command to a vehicle steering torque command is merely exemplary in nature, and is in no way intended to limit the invention or its applications or uses.

The following description includes a discussion of the relationship between vehicle steering angle and vehicle steering torque. FIG. **1** illustrates an exemplary vehicle steering system **10** including a steering wheel **12** and road wheels **14** and **16** for this discussion. The steering wheel **12** is coupled to the wheels **14** and **16** through a steering column **18** and an axle **20** in a manner that is well understood by those skilled in the art so that when the driver turns the steering wheel **12** the wheels **14** and **16** turn accordingly.

The steering system **10** includes an electric power steering (EPS) system **24** having an electric steering motor **26** mounted to the axle **20** that provides electric steering assist in response to the vehicle driver turning the steering wheel **12** in a manner that is well understood in the art. In other words, when the vehicle driver turns the steering wheel **12**, the EPS system **24** turns the wheels **14** and **16** the amount commanded by the vehicle driver so that the turning of the wheels **14** and **16** on the roadway is easier. The vehicle system **10** may also include an active front steering (AFS) system **28** including an electric motor **30** mounted to the steering column **18**. AFS systems are well known to those skilled in the art that provide additional steering, or corrective steering, in various types of vehicle stability control systems in connection with the vehicle driver turning the steering wheel **12**, where the AFS system **28** decouples the steering wheel **12** from the wheels **14** and **16**.

The steering system **10** also includes an EPS electronic control unit (ECU) **32**, which in one embodiment is configured to provide overall EPS system control. The ECU **32** also includes a lane centering and/or lane keeping system **34** for providing adaptive lane keeping and lane centering control in an autonomous or semi-autonomous vehicle consistent with the discussion herein. As understood by one of ordinary skill in the art, the EPS system **24** electrically assists a driver in the steering of the vehicle by applying a variable motor torque command T_M to the steering motor **26** and, as needed, a torque overlay command (TOC) that alters the value of the motor torque command T_M during an EPS-assisted steering maneuver.

A steering angle sensor **36** mounted to the steering column **18** measures the rotation of the steering wheel **12** and the steering column **18** and provides a steering angle signal θ_s indicative of same. A torque sensor **38** mounted to the steering column **18** measures the torque on the steering column **18** and provides a torque signal T_s indicative of same. The ECU **32** is in electrical communication with the angle sensor **34** and the torque sensor **38** such that the steering angle signal θ_s and the steering torque signal T_s are made available to the ECU **32**. The ECU **32** processes a set of vehicle performance values, including the steering angle signal θ_s and the steering torque signal T_s, and continuously monitors vehicle parameters, such as, but not limited to, the speed of the vehicle, the vehicle yaw rate, vehicle lateral and longitudinal acceleration, etc. In addition, the ECU **32** may be configured to receive data from various lane detection sensors, which are generally mounted to the exterior of the vehicle. In many systems, the lane detection sensors include lane detection cameras mounted to various locations on the vehicle, such as the front windshield of the vehicle, under the vehicle side mirrors, etc., which are configured to sense lane markings affixed to the roadway. The lane markings generally indicate the boundaries defining the geometry of the lane, including the lane center. One of ordinary skill in the art would understand that processors and ECUs other than ECU **32** may be used by the lane control system **34** to monitor and determine the center of the lane.

FIG. **2** is an illustration **50** showing a subject vehicle **52** including a forward looking camera **54** traveling in a lane **56** and approaching a curve **58** in the lane **56**. The camera **54** is intended to represent all combinations of cameras, sensors, radar, lidar, etc. on the vehicle **52** for detecting lane markings and other objects around the vehicle **52**. The lane centering/lane keeping system **34** is attempting to maintain the subject vehicle **52** at the center of the lane **56** represented by line **60**. Through the processes discussed herein and known in the art, the system **34** provides steering torque to the vehicle **52** to provide the lane centering and lane keeping by the anticipated position of the vehicle **52** at future times t_1, t_2, t_3, t_4, etc. as it negotiates the curve **58**.

The present invention proposes an early warning alert to the vehicle driver in advance of when the lane centering/lane keeping system **34** is unable to maintain the vehicle **52** in the lane **56** as a result of vehicle speed and curve radius due to a maximum steering torque limit on the system **34**. By providing a warning in advance to the driver that the lane centering/lane keeping steering control may have to make adjustments in speed to maintain the lane centering, the driver will be able to take over the vehicle control if desired to maintain the vehicle speed. Current systems often employ a lane departure warning (LDW) that alerts the vehicle driver when the vehicle **52** is outside of the lane boundary. However, this alert may not be early enough for the driver to take over the steering control to maintain the vehicle **52** in the lane **56**. Typically for highway speeds, the vehicle **52** can get out of the lane **56** in a fraction of a second. Thus, an early driver warning is important to reduce the chance of road accidents.

FIG. **3** is a flow block diagram **70** showing a process for a known path prediction algorithm for predicting the path of the vehicle **52** for lane centering and lane keeping. Box **72** represents the vehicle sensing devices and systems that provide various vehicle parameters and variables to provide the path prediction including vehicle longitudinal speed v_x, vehicle yaw rate w, vehicle lateral acceleration a_y, vehicle steering angle δ and steering torque τ. These parameters and variables are sent to a vehicle dynamics box **74** that calculates the vehicle lateral speed v_y by known techniques. The vehicle lateral speed v_y is the amount of vehicle speed that the vehicle **52** needs to employ to cause the vehicle **52** to steer to the center line **60** and follow the desired vehicle path for lane centering purposes. Based on the vehicle lateral speed v_y, a path prediction block **76** then determines the path of the vehicle **52** that gives the position of the vehicle **52** in the future

at integer multiples of time intervals Δ, for example, 100 ms, from the current time t, represented as the vehicle lateral distance y(t+Δ), and the vehicle heading angle θ(t+Δ). FIG. **2** shows $t_1=t+\Delta$, $t_2=t+2\Delta$, $t_3=t+3\Delta$, etc. The lane centering algorithm uses the predicted path of the vehicle **52**, represented by y(t+Δ) and θ(t+Δ), to provide a steering command for the steering angle δ to cause the predicted path of the vehicle **52** to follow the center line **60**. U.S. Pat. No. 8,170,739 issued May 1, 2012 to Lee, assigned to the assignee of this application and herein incorporated by reference, discloses more details for this process for vehicle path prediction.

The present invention can be interpreted as an inverse problem of determining the vehicle future path given the steering angle δ. The present invention determines the steering angle δ, and then the steering torque τ required to provide the steering angle δ from the desired path. FIG. **4** is a flow block diagram **80** showing a general overview of this process where the desired vehicle path in the next few time steps is provided at block **82** as $y_d(t+\Delta)$ and $\theta_d(t+\Delta)$, which are the same values, or similar values, as the predicted path from the block **76**. For example, a good lane centering/lane keeping controller can control the vehicle to accurately follow the desired path. In this case, the vehicle's future path will be very close to the initially planned path. The desired path is sent to block **84** to determine the required vehicle motion to follow that path for each of those future time steps. Particularly, the algorithm determines the vehicle longitudinal speed v_x, the vehicle lateral speed v_y, the vehicle yaw rate w, the vehicle lateral acceleration a_y, and the vehicle yaw acceleration $\dot{w}$, at each time step. These vehicle motion parameters are provided to block **86** that employs an algorithm based on vehicle dynamics to calculate the vehicle steering angle δ at the future points in time to follow the desired path. As will be discussed below, this steering angle δ is then converted to the steering torque τ at those times to determine whether any of those torques exceeds the required maximum torque of the lane centering system **34**, and if so, provide a driver alert.

The first step in the process is to capture the lane data within some preview distance from of the current location of the vehicle **52**, for example, three seconds of travel distance, using the various sensing systems on the vehicle **52**, such as the camera **54**, GPS, map database, etc.

The next step in the process is to generate the desired path at the block **82** using the lane data. For example, the desired path can be represented by the polynomial equation:

$$y_n(x_n) = a_0 + a_1 x_n + a_2 x_n^2 + a_3 x_n^3 + a_4 x_n^4 + a_5 x_n^5, \tag{1}$$

$$0 \le x_n = \frac{x}{v_x \Delta T} \le 1, \tag{2}$$

$$y_n = \frac{y}{L}, \tag{3}$$

where x is the longitudinal distance from the vehicle center, y is the lateral distance from the vehicle center, v_x is the vehicle longitudinal speed, L is the lane width and ΔT is the time of the path generation distance. The parameters $a_1, a_2, \ldots, a_5$ are obtained from the lane geometry data measured by the lane sensing system, which is typically a forward looking camera.

Once the desired vehicle path is determined, i.e., all of the parameters $a_1, a_2, \ldots, a_5$ in equation (1) are determined, the next step in the process is to determine the vehicle state predictions or vehicle motion along that path at the block **84**. Particularly, based on the desired path obtained by equation (1), the future vehicle motion represented by the vehicle longitudinal speed v_x, the vehicle lateral speed v_y, the vehicle yaw rate w, the vehicle lateral acceleration a_y, and the vehicle yaw acceleration $\dot{w}$ can be calculated at each time step from the path as:

$$v_y = \dot{y} - v_x \phi, \tag{4}$$

where:

$$\dot{y} \equiv dy/dt = y' v_x. \tag{5}$$

From the desired path:

$$y' = 5a_5x^4 + 4a_4x^3 + 3a_3x^2 + 2a_2x + a_1, \tag{6}$$

$$a_y \equiv \ddot{y} = d^2y/dt^2 = y'' v_x^2 + y' a_x, \tag{7}$$

$$y'' = 20a_5x^3 + 12a_4x^2 + 6a_3x + 2a_2, \tag{8}$$

$$w = y', \tag{9}$$

$$\dot{w} = d(y')/dt = y'' v_x. \tag{10}$$

For the vehicle **52** to follow the desired path obtained by equation (1), the vehicle **52** should maintain the vehicle longitudinal speed v_x, the vehicle lateral speed v_y, the vehicle yaw rate w, the vehicle lateral acceleration a_y, and the vehicle yaw acceleration $\dot{w}$ obtained from equations (4), (7), (9) and (10), respectively.

Once the future vehicle motion is determined at each time step based on the parameters referred to above, the algorithm then calculates the expected steering angle δ from the desired vehicle path and the vehicle dynamics at those time steps. FIG. **5** is an illustration **90** showing vehicle wheels **92** and **94** and a lane center line **96** and including the variables employed in this calculation. For example, the steering angle δ can be calculated by the following equation for each time step t_1, t_2, t_3 . . . .

$$\begin{bmatrix} \dot{v}_y \\ \dot{w} \end{bmatrix} = \begin{bmatrix} -\frac{C_f + C_r}{m v_x} & \frac{b C_r - a C_f}{m v_x} - v_x \\ \frac{b C_r - a C_f}{I v_x} & \frac{a^2 C_f + b^2 C_r}{I v_x} \end{bmatrix} \begin{bmatrix} v_y \\ w \end{bmatrix} + \begin{bmatrix} \frac{C_f}{m} \\ \frac{a C_f}{I} \end{bmatrix} \cdot \delta, \tag{11}$$

where m is the vehicle mass, I is vehicle inertia, C_f and C_r are front and rear cornering stiffness, respectively, a is the distance from the vehicle center to the front axle and b is the distance from the vehicle center to the rear axle.

Once the steering angle δ is determined for each point in time, the steering torque τ associated with each steering angle δ to maintain the vehicle on the desired path needs to be determined to determine whether any of the torques exceed the maximum torque allowable by the lane keeping/lane centering system **34**. The steering torque τ can be determined by any suitable technique known to those skilled in the art. For example, the following equations can be used to provide that calculation.

$$\frac{\delta}{\tau_{total}} = Z^{-D} \frac{c_0 + c_1 z^{-1} + \cdots + c_n z^{-n}}{1 + d_1 z^{-1} + d_2 z^{-2} + \cdots + d_m z^{-m}}, \tag{12}$$

$$\tau_{total} = \tau_{driver} + \tau_{EPS} + \tau_{SAT}, \tag{13}$$

where the steering angle δ is measured by a sensor, τ_{driver} is the driver's steering input torque that is assumed to be zero during the modeling process, τ_{EPS} is a known EPS motor

torque command, τ_{SAT} is a steering self-aligning torque that can be estimated from a dynamic equation or empirical data set, discussed in detail below, n and m are the system orders and can be, for example, 2 and 3, respectively, z^{-1} represents a one-step delay, z^{-2} represents a two-step delay, etc. in the response of the steering system of the vehicle **52**, and D is a pure time delay in the number of sample times.

Depending on the accuracy of the model, the system orders n and m can be increased. The values $c_0, \ldots, c_n$ and $d_1, \ldots, d_m$ are unknown, where the object is to find the unknown parameters $c_0, \ldots, c_n$ and $d_1, \ldots, d_m$ in equation (12). In one embodiment, training methods employing an auto-regressive moving average model can be employed to obtain the unknown parameters during vehicle testing, as will be discussed below.

Equation (12) models the steering system with a system delay and the history of the past steering angle and torque data. The model does not require prior knowledge of tire and steering dynamics. The parameters $c_0, \ldots, c_n$ and $d_1, \ldots, d_m$ are obtained during vehicle testing using measured steering angle and steering torque data, and then provided in tables during vehicle operation so that the steering torque τ can be calculated from equation (12) using the known steering angle δ. It is noted that equation (12) is one technique for determining the steering torque τ based on the steering angle δ. However, other techniques may be known in the art for determining the steering torque τ based on the steering angle δ that may be applicable to the invention discussed above.

FIG. **6** is a flow chart diagram **100** showing a process for determining whether a driver alert will be given if the lane centering/lane keeping system **34** requires a steering torque that exceeds the maximum torque limit of the system **34** based on the discussion above. The algorithm starts at oval **102** and waits at box **104** when the lane centering system **34** is disengaged. The algorithm then determines whether there is a driver request for engaging the lane centering system **34** at decision diamond **106**, and if not, the algorithm returns to the box **104**. If there is a request by the driver to engage the lane centering system **34**, the algorithm checks to determine whether lane centering is available at decision diamond **108** based on whether the requirements for following the lane, such as lane markers, can be employed to provide the lane centering. If lane centering is not available at the decision diamond **108**, then the algorithm returns to the box **104**, but if lane centering is available at the decision diamond **108**, the algorithm proceeds to box **110** to engage the lane centering system **34**.

Once the lane centering system **34** is engaged, the algorithm captures the lane data required at box **112** to provide the lane centering and generates the desired vehicle path at box **114** as discussed above. The vehicle path is then predicted at box **116** and the vehicle motion is then determined at box **118** as discussed above at the block **84**. The algorithm then calculates the steering angle δ from the predicted vehicle motion at box **120** in the manner discussed above at the block **86**. The algorithm then obtains the steering dynamics at box **122** to calculate the steering torque τ based on the calculated steering angle δ and then calculates the steering torque τ at box **124**. The algorithm calculates the steering angle δ and the steering torque τ for all of the sample times. The algorithm determines whether any of the steering torques r exceed the predetermined maximum torque limit at decision diamond **126**, and if not, does not issue a driver alert at box **128**, but if any do exceed the limit, issues the driver alert at box **130**.

The need for determining the vehicle steering torque r based on the steering angle δ is a common problem in most automatic steering control situations. In known systems, the steering angle sensor **36** measures the steering wheel angle δ, but sensors are not available to directly measure the road wheel angle, and thus road wheel angles are typically estimated by a steering model. Known steering models that can be used to convert the vehicle steering angle δ to the vehicle steering torque r, such as Paceka's steering model, shown by equations (14)-(17) below, where variables in these equations can be found in FIG. **1**, typically require high computing power and are often not applicable for fast running vehicle motion control features. Further, steering dynamics are different in low speed versus high speed vehicle motion. Thus, the known steering models typically cannot be directly applicable to a lane centering system because of limited computing power, the non-existence of a road wheel angle sensor and the inaccuracy of stop and go situations.

$$T_{driver} = (N^2 I_{motor} + I_{str})\ddot{\theta} + (N^2 C_{motor} + C_{str})\dot{\theta} + N \cdot T_{motor} + T_{road} + T_{torsion} + T_{self} + T_{tire}, \tag{14}$$

$$T_{torsion} = k \cdot (\theta_{str} - \theta_{pinion}) + c \cdot (\dot{\theta}_{str} + \dot{\theta}_{pinion}), \tag{15}$$

$$T_{tire} = \mu \cdot F_z \cdot \sin\left(C \cdot \tan^{-1}\left(\frac{C_{F\alpha}}{C \cdot \mu \cdot F_z} \cdot x - E \cdot \left(\frac{C_{F\alpha}}{C \cdot \mu \cdot F_z} \cdot x - \tan^{-1}\left(\frac{C_{F\alpha}}{C \cdot \mu \cdot F_z}\right)\right)\right)\right), \tag{16}$$

$$T_{self} = 2\xi \cdot C_f\left(\delta - \frac{\dot{y} + a \cdot r}{v_x}\right). \tag{17}$$

Equation (12) can be used for these applications other than the driver alert process discussed above. Equation (12) provides a generalized high order steering model that can provide more accuracy and performance with limited computing power. If high accuracy is not required, then equation (12) can reduce the complexity for faster operation. As will be discussed in further detail below, equation (12) provides a balance and accuracy in computing power.

FIG. **7** is a flow chart diagram **160** showing an overview of a process for developing a steering model for converting steering angle δ to the steering torque τ. At box **162**, the algorithm determines an estimation of the self-aligning torque τ_{SAT} which can be performed using a dynamic equation or an empirical data set. For the embodiment where the torque τ_{SAT} is estimated from a dynamic equation, equation (18) below can be used.

$$\tau_{SAT} = -K_1\delta + K_2 a_y - \frac{K_3}{v_x} w, \tag{18}$$

$$K_1 = (L_p + L_m)C_f\left(1 + \frac{C_f}{m}\right), \tag{19}$$

where:

$$K_2 = \frac{(L_p + L_m)C_f}{C_f + C_r} m, \tag{20}$$

$$K_3 = \frac{(L_p + L_m)C_f}{C_f + C_r} m(cC_f - dC_r), \tag{21}$$

and where K_1, K_2, and K_3 are known constants from tire characteristics as a function of front and rear tire stiffness C_f and C_r, m is vehicle mass, a_y is vehicle lateral speed, w is the vehicle yaw rate, L_p is pneumatic trail, and L_m is mechanical trail. All of these parameters are known and considered con-

stant for small slip angles as employed in lane centering/lane keeping systems. The mechanical trail L_m is purely a function of steering geometry and can be determined from the road wheel caster angle.

Determining the self-aligning torque τ_{SAT} using an empirical data set can be performed as follows. The empirical based estimation technique uses pre-collected data sets and models the torque τ_{SAT} as a two-dimensional look-up table, τ_{SAT}=f (speed, steering angle). To estimate the torque τ_{SAT} from the empirical data, a vehicle is driven with a known initial steering angle, such as 10°, 20°, 30°, etc., and pre-specified vehicle speed, such as 10 mph, 20 mph, 30 mph, etc. Next, a steering torque is applied to the vehicle steering system and the steering torque is increased until the steering wheel **12** goes to a steady state. The steering torque that keeps the steering wheel **12** at the initial steering angle is the self-aligning torque τ_{SAT}. Note that current steering systems have a capacity to generate a steering torque from a computer command. The above steps are repeated at various steering wheel angles and vehicle speeds, and a complete look-up table is populated.

At box **164**, an off-line steering model is employed to provide an angle to torque estimation, where the model orders n and m are selected for the particular application. The off-line steering model can be equation (12) rewritten as:

$$\delta(k) = [\,-d_1 \;\; \ldots \;\; -d_m \;\; c_0 \;\; \ldots \;\; c_n\,]\begin{bmatrix} \delta(k-1) \\ \vdots \\ \delta(k-m) \\ \tau_{total}(k-D) \\ \vdots \\ \tau_{total}(k-D-n) \end{bmatrix}, \tag{22}$$

where k is the current time step and k−1 is the previous time step.

The pure time delay D in equation (22) can be found by a separate test procedure, such as by a step response test, i.e., send a step torque command to the steering system and measure the time difference between the time that the torque command was sent and the time that the steering system starts moving.

The algorithm then applies known steering torque commands and measures the steering angle δ at each time step, such as every 10 ms. For the example where m=3 and n=2, the process collects at least five data sets to solve for the parameters c_0, c_1, c_2, d_1 and d_2. The algorithm then applies a least-square method to solve equation (22) to obtain these parameters.

The algorithm then considers speed variations in the off-line model at box **166**. Steering dynamics vary depending on the vehicle speed. For improved accuracy in the torque conversion, three speed variations are offered for the steering model including low speed L, medium speed M and high speed H. Equation (12) is rewritten below for each of these speeds. The variables $c_0, \ldots, c_n$ and $d_1, \ldots, d_m$ are determined for each speed as above.

$$\frac{\delta_L}{\tau_{total,L}} = Z^{-D}\frac{c_{L,0} + c_{L,1}z^{-1} + \ldots + c_{L,n}z^{-n}}{1 + d_{L,1}z^{-1} + d_{L,2}z^{-2} + \ldots + d_{L,m}z^{-m}}, \tag{23}$$

$$\frac{\delta_M}{\tau_{total,M}} = Z^{-D}\frac{c_{M,0} + c_{M,1}z^{-1} + \ldots + c_{M,n}z^{-n}}{1 + d_{M,1}z^{-1} + d_{M,2}z^{-2} + \ldots + d_{M,m}z^{-m}}, \tag{24}$$

-continued

$$\frac{\delta_H}{\tau_{total,H}} = Z^{-D}\frac{c_{H,0} + c_{H,1}z^{-1} + \ldots + c_{H,n}z^{-n}}{1 + d_{H,1}z^{-1} + d_{H,2}z^{-2} + \ldots + d_{H,m}z^{-m}}. \tag{25}$$

The pure time delay D is not a function of the vehicle speed, and will remain the same in all speed variations.

FIG. **8** is a flow chart diagram **170** showing the operation for the off-line part of the algorithm discussed above for boxes **162**, **164** and **166**. The algorithm starts at oval **172**, and estimates the self-aligning steering torque τ_{SAT} from either the dynamic equation or the look-up table at box **174**. The algorithm then applies known steering torque commands at box **176**, and measures and records the steering wheel angle δ for those torques at box **178**. The algorithm then records the steering torque command τ at box **180** and finds the nominal steering model parameters at box **182**. The algorithm then updates the steering model for low speed at box **184**, for medium speed at box **186** and for high speed at box **188**, and the algorithm ends at oval **190**. As a result of this off-line process, all of the parameters c and d from the off-line models of equations (23), (24) and (25) will be determined.

Returning to FIG. **7**, the algorithm then uses the off-line models of equations (23), (24) and (25) discussed above and automatically adjusts the models in real-time during vehicle operation at box **168**. Particularly, the following discussion describes a technique for how the steering model in equation (22) can be automatically adjusted in real-time while the lane centering system is operational when the model is no longer generating an accurate torque conversion. First, equation (22) is rewritten as:

$$\phi^T(k)=[\delta(k-1)\delta(k-2)\ldots\delta(k-m)\tau(k-D-1)\ldots\tau(k-D-n)] \tag{26}$$

$$\hat{\theta}^T(k)=[-d_1\ldots d_m c_0\ldots c_n]. \tag{27}$$

As above, the steering and torque values δ(k), δ(k−1), . . . , τ(k−D), τ(k−D−1), . . . are measured data and the parameters $c_0, \ldots, c_n$ and $d_1, \ldots, d_m$ are calculated using the least-square process. The angle $\hat{\theta}(k-1)$ is the parameter set that is solved at the previous time step. This parameter set will be updated to the angle $\hat{\theta}(k)$ with the new measured data set φ(k). The updated equation is given by:

$$\hat{\theta}(k) = \hat{\theta}(k-1) + \frac{P(k-1)\varphi(k)}{\lambda + \varphi^T(k)P(k-1)\varphi(k)}\left(\delta(k) - \varphi^T(k)\hat{\theta}(k-1)\right), \tag{28}$$

$$P(k) = \frac{1}{\lambda}\left(P(k-1) - \frac{P(k-1)\varphi(k)\varphi^T(k)P(k-1)}{\lambda + \varphi^T(k)P(k-1)\varphi(k)}\right), \tag{29}$$

where λ is a forgetting factor set between 0 to 1 and is tunable.

The process applies the updated equation for all speed variation steering models (low, medium, and high speed) during operation of the vehicle. FIG. **9** is a flow chart diagram **140** showing a process for updating the steering model discussed above in real-time, where like steps to the flow chart diagram **100** are identified by the same reference number. Once the lane centering system **34** is engaged at the box **110**, the algorithm then engages the steering model updating algorithm at box **142**. Once the steering model updating algorithm is engaged, the algorithm measures and records the steering wheel angle δ at box **144**, estimates the self-aligning steering torque τ_{SAT} at box **146**, and records the steering torque command τ at box **148** for each steering wheel angle δ. The algorithm then determines whether the parameter changes are greater than a predetermined threshold at decision diamond

150, and if not, meaning that the current steering model is providing an accurate conversion of the steering angle to steering torque, returns to determining whether the lane center/lane keeping system **34** has been engaged at the box **110**. If the parameters are greater than the threshold at the decision diamond **150**, meaning that the current steering model is not providing an accurate conversion of the steering angle to steering torque, then the algorithm updates the on-line steering model at box **152** as discussed above. The algorithm then applies the low speed steering model at box **154**, applies the medium speed steering model at box **156** and applies the high speed steering model at box **158**.

As will be well understood by those skilled in the art, the several and various steps and processes discussed herein to describe the invention may be referring to operations performed by a computer, a processor or other electronic calculating device that manipulate and/or transform data using electrical phenomenon. Those computers and electronic devices may employ various volatile and/or non-volatile memories including non-transitory computer-readable medium with an executable program stored thereon including various code or executable instructions able to be performed by the computer or processor, where the memory and/or computer-readable medium may include all forms and types of memory and other computer-readable media.

The foregoing discussion disclosed and describes merely exemplary embodiments of the present invention. One skilled in the art will readily recognize from such discussion and from the accompanying drawings and claims that various changes, modifications and variations can be made therein without departing from the spirit and scope of the invention as defined in the following claims.

What is claimed is:

1. A method for converting a vehicle steering angle command to a vehicle steering torque command for a vehicle steering system in a vehicle, said method comprising:

estimating a self-aligning torque that defines the torque that maintains a vehicle steering wheel at an initial steering angle;

applying known total steering torque commands to the steering system at a plurality of sample time steps where the known steering torque commands include the self-aligning torque;

measuring, using a steering angle sensor, a vehicle steering angle at each time step; and

modeling the steering system of the vehicle using the torque commands, the measured steering angles, a system delay and a plurality of steering system parameters for a plurality of different vehicle speeds, wherein modeling the steering system includes performing an off-line process to determine an off-line steering model and an on-line process to correct the off-line steering model in real time during vehicle operation.

2. The method according to claim **1** wherein estimating a self-aligning torque includes employing dynamic equations.

3. The method according to claim **2** wherein the dynamic equations include:

$$\tau_{SAT} = -K_1\delta + K_2 a_y - \frac{K_3}{v_x} w$$

$$K_1 = (L_p + L_m)C_f\left(1 + \frac{C_f}{m}\right)$$

$$K_2 = \frac{(L_p + L_m)C_f}{C_f + C_r} m$$

-continued

$$K_3 = \frac{(L_p + L_m)C_f}{C_f + C_r} m(cC_f - dC_r)$$

where τ_{SAT} is the self-aligning torque, v_x is vehicle longitudinal speed, δ is steering angle, c and d are the steering system parameters, K_1, K_2, and K_3 are known constants from tire characteristics as a function of front and rear tire stiffness C_f and C_r, m vehicle mass, w is vehicle yaw rate, a_y is vehicle lateral acceleration, L_p is pneumatic trail, and L_m is mechanical trail.

4. The method according to claim **1** wherein estimating a self-aligning torque includes using an empirical data set that models the self-aligning torque as a multi-dimensional look-up table based on vehicle speed, steering angle and other vehicle parameters.

5. The method according to claim **4** wherein estimating a self-aligning torque using the empirical method includes driving the vehicle with a known initial steering angle and a predetermined vehicle speed, applying a steering torque to the steering system, increasing the steering torque until it maintains the steering wheel at the initial steering wheel angle and repeating these steps at predetermined steering wheel angles and vehicle speeds to populate the look-up table.

6. The method according to claim **1** wherein modeling the steering system includes using the equation:

$$\frac{\delta}{\tau_{total}} = Z^{-D}\frac{c_0 + c_1 z^{-1} + \ldots + c_n z^{-n}}{1 + d_1 z^{-1} + d_2 z^{-2} + \ldots + d_m z^{-m}}$$

where τ_{total} is total torque and includes the self-aligning torque, driver initiated torque and steering system torque, δ is the vehicle steering angle, z is the system delay for a response of the steering system, D is a pure time delay for the number of sample time steps, c and d are the steering system parameters, and n and m are system orders.

7. The method according to claim **6** wherein the plurality of time steps includes a current time step and a previous time step, and wherein the equation is converted to the equation:

$$\delta(k) = [\,-d_1 \;\ldots\; -d_m \;\; c_0 \;\ldots\; c_n\,]\begin{bmatrix} \delta(k-1) \\ \vdots \\ \delta(k-m) \\ \tau_{total}(k-D) \\ \vdots \\ \tau_{total}(k-D-n) \end{bmatrix}$$

where k is the current time step and k−1 is the previous time step.

8. The method according to claim **7** wherein the equation is solved by a least-square process to identify the steering system parameters and define the steering model.

9. The method according to claim **7** wherein the pure time delay is determined by a step response test that includes applying a step torque command and measuring a time difference until the steering wheel moves.

10. The method according to claim **1** wherein the plurality of different vehicle speeds include a low vehicle speed, a medium vehicle speed and a high vehicle speed.

11. The method according to claim **1** wherein correcting the steering model on-line during vehicle operation includes using the equations:

$$\hat{\theta}(k) = \hat{\theta}(k-1) + \frac{P(k-1)\varphi(k)}{\lambda + \varphi^T(k)P(k-1)\varphi(k)}\left(\delta(k) - \varphi^T(k)\hat{\theta}(k-1)\right)$$

$$P(k) = \frac{1}{\lambda}\left(P(k-1) - \frac{P(k-1)\varphi(k)\varphi^T(k)P(k-1)}{\lambda + \varphi^T(k)P(k-1)\varphi(k)}\right)$$

where λ is a forgetting factor.

12. A method for converting a vehicle steering angle command to a vehicle steering torque command for a vehicle steering system in a vehicle, said method comprising:

estimating a self-aligning torque that defines the torque that maintains a vehicle steering wheel at an initial steering angle using dynamic equations or an empirical data set that models the self-aligning torque as a multi-dimensional look-up table based on vehicle speed, steering angle and other vehicle parameters;

applying known total steering torque commands to the steering system at a plurality of sample time steps where the known steering torque commands include the self-aligning torque;

measuring, using a steering angle sensor, a vehicle steering angle at each time step;

modeling the steering system of the vehicle off-line at a plurality of vehicle speeds using the torque commands, the measured steering angles, a system delay and a plurality of steering system parameters, wherein modeling the steering system includes using the equation:

$$\frac{\delta}{\tau_{total}} = Z^{-D}\frac{c_0 + c_1 z^{-1} + \ldots + c_n z^{-n}}{1 + d_1 z^{-1} + d_2 z^{-2} + \ldots + d_m z^{-m}}$$

where τ_{total} is total torque and includes the self-aligning torque, driver initiated torque and steering system torque, δ is the vehicle steering angle, z is the system delay for a response of the steering system, D is a pure time delay for the number of sample time steps, c and d are the steering system parameters, and n and m are system orders, and wherein the equation is solved by a least-square process to identify the steering system parameters; and

correcting the steering model in an on-line process during vehicle operation.

13. The method according to claim **12** wherein the dynamic equations include:

$$\tau_{SAT} = -K_1\delta + K_2 a_y - \frac{K_3}{v_x}w$$

$$K_1 = (L_p + L_m)C_f\left(1 + \frac{C_f}{m}\right)$$

$$K_2 = \frac{(L_p + L_m)C_f}{C_f + C_r}m$$

$$K_3 = \frac{(L_p + L_m)C_f}{C_f + C_r}m(cC_f - dC_r)$$

where τ_{SAT} is the self-aligning torque, v_x is vehicle longitudinal speed, δ is steering angle, c and d are the steering system parameters, K_1, K_2, and K_3 are known constants from tire characteristics as a function of front and rear tire stiffness C_f and C_r, m vehicle mass, w is vehicle yaw rate, a_y is vehicle lateral acceleration, L_p is pneumatic trail, and L_m is mechanical trail.

14. The method according to claim **12** wherein estimating a self-aligning torque using the empirical method includes driving the vehicle with a known initial steering angle and a predetermined vehicle speed, applying a steering torque to the steering system, increasing the steering torque until it maintains the steering wheel at the initial steering wheel angle and repeating these steps at predetermined steering wheel angles and vehicle speeds to populate the look-up table.

15. The method according to claim **12** wherein the plurality of time steps includes a current time step and a previous time step, and wherein the equation is converted to the equation:

$$\delta(k) = [\,-d_1 \;\; \ldots \;\; -d_m \;\; c_0 \;\; \ldots \;\; c_n\,]\begin{bmatrix} \delta(k-1) \\ \vdots \\ \delta(k-m) \\ \tau_{total}(k-D) \\ \vdots \\ \tau_{total}(k-D-n) \end{bmatrix}$$

where k is the current time step and k−1 is the previous time step.

16. The method according to claim **12** wherein the pure time delay is determined by a step response test that includes applying a step torque command and measuring a time difference until the steering wheel moves.

17. The method according to claim **12** wherein correcting the steering model on-line during vehicle operation includes using the equations:

$$\hat{\theta}(k) = \hat{\theta}(k-1) + \frac{P(k-1)\varphi(k)}{\lambda + \varphi^T(k)P(k-1)\varphi(k)}\left(\delta(k) - \varphi^T(k)\hat{\theta}(k-1)\right)$$

$$P(k) = \frac{1}{\lambda}\left(P(k-1) - \frac{P(k-1)\varphi(k)\varphi^T(k)P(k-1)}{\lambda + \varphi^T(k)P(k-1)\varphi(k)}\right)$$

where λ is a forgetting factor.

18. A conversion system for converting a vehicle steering angle command to a vehicle steering torque command for a vehicle steering system in a vehicle, said conversion system comprising:

means for estimating a self-aligning torque that defines the torque that maintains a vehicle steering wheel at an initial steering angle;

means for applying known total steering torque commands to the steering system at a plurality of sample time steps where the known steering torque commands include the self-aligning torque;

means for measuring a vehicle steering angle at each time step; and

means for modeling the steering system of the vehicle using the torque commands, the measured steering angles, a system delay and a plurality of steering system parameters for a plurality of different vehicle speeds, wherein the means for modeling the steering system performs an off-line process to determine an off-line steering model and an on-line process to correct the off-line steering model in real time during vehicle operation.

19. The conversion system according to claim **18** wherein the means for the steering system includes uses the equation:

$$\frac{\delta}{\tau_{total}} = Z^{-D}\frac{c_0 + c_1 z^{-1} + \ldots + c_n z^{-n}}{1 + d_1 z^{-1} + d_2 z^{-2} + \ldots + d_m z^{-m}}$$

where τ_{total} is total torque and includes the self-aligning torque, driver initiated torque and steering system torque, δ is the vehicle steering angle, z is the system delay for a response of the steering system, D is a pure time delay for the number of sample time steps, c and d are the steering system parameters, and n and m are system orders.

20. The system according to claim **19** wherein the plurality of time steps includes a current time step and a previous time step, and wherein the equation is converted to the equation:

$$\delta(k) = [\,-d_1 \;\; \ldots \;\; -d_m \;\; c_0 \;\; \ldots \;\; c_n\,]\begin{bmatrix} \delta(k-1) \\ \vdots \\ \delta(k-m) \\ \tau_{total}(k-D) \\ \vdots \\ \tau_{total}(k-D-n) \end{bmatrix}$$

where k is the current time step and k−1 is the previous time step, wherein the equation is solved by a least-square process to identify the steering system parameters and define the steering model.

* * * * *