No Printed Specification Available

46X

S. G. DORR.

CLOTH SHEARING MACHINE.

Patented Oct. 20, 1792.

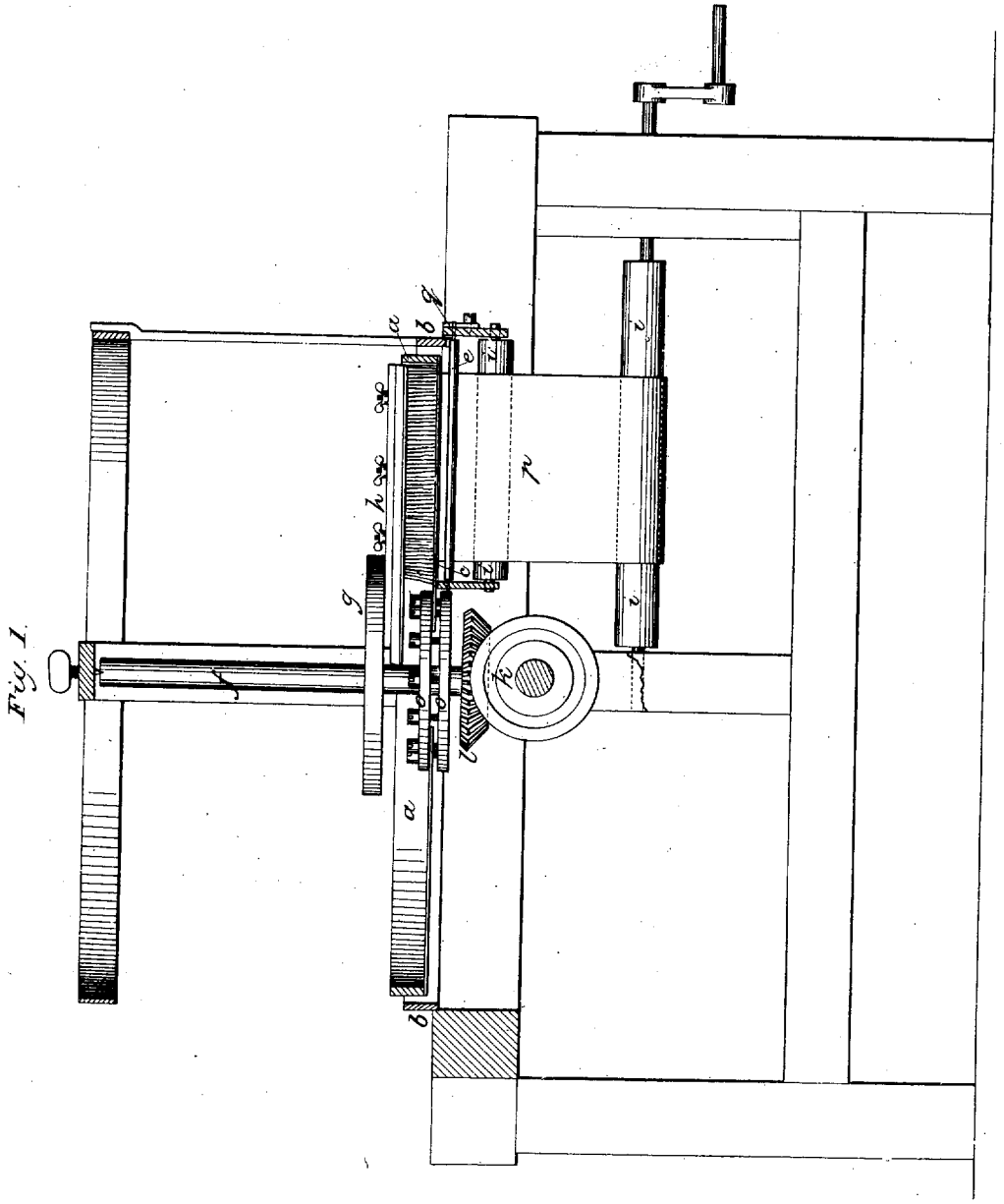

THE NORRIS PETERS CO., PHOTO-LITHO., WASHINGTON, D. C

46X

Sheet 2. 2 Sheets.

S. G. Dorr.

Cloth Shearing Mach.

Patented Oct. 20, 1792.

Fig: 2.

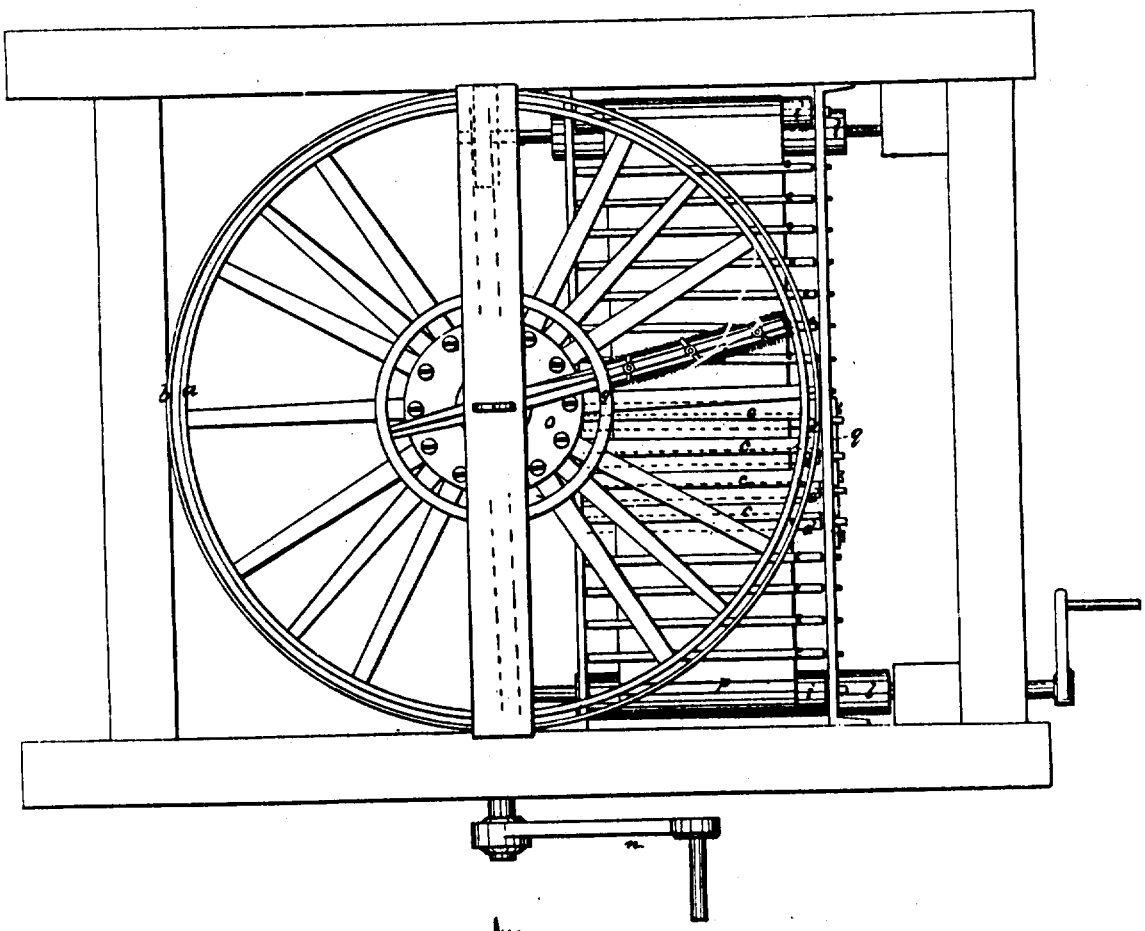

Fig: 3.

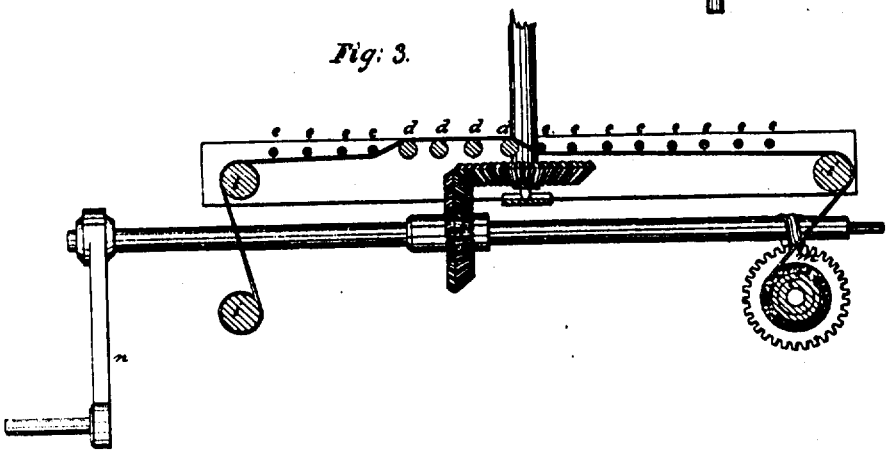

Oct 20, 1792

Oct. 20. 1792 46x

41

The United States.

Dated Oct. 20 1792.

To all to whom these presents shall come. Greeting

Whereas Samuel G. Dorr of the City of Albany in the State of New York, hath presented a petition to the Secretary of State, the Secretary for the Department of War, and the Attorney General of the United States, alleging and suggesting that he hath invented a machine denominated "the wheel of knives" for raising and shearing the Wrap of cloths, with less labor than is requisite in the ordinary mode, that is to say a wheel having twelve spring knives regulated by two metal wheels in a metal frame, consisting of three metal posts placed within a wooden frame, and encompassed by two brass rings having four tangent knives, so as that, in its revolution, the edge of each coming in contact, operate in the manner of shears. In the said brass rings are also placed four rollers having sliders which bring the cloth up to the said tangent knives, and twelve other rollers to protect the cloth from injury of the wheel of knives. A revolving shaft having a brush thereon is placed at the bottom of the third wheel, so as on the one side to raise the knap of the cloth for shearing, and on the other to brush off the flecks. within about two inches of the bottom of the said three posts, are three projecting pins of about three inches in length, in which are placed two rollers, between these two rollers the cloth passes from a roller placed under the same to the wheel of knives. The whole machinery may be put in motion by the aid of one person, a winch and four cog wheels, and may be worked, either vertically or horizontally.

And whereas, the said Invention hath been deemed sufficiently useful and important, These are therefore in pursuance of the act entitled "an act to promote the progress of useful arts" to grant to the said Samuel G. Dorr, his heirs, administrators or assigns, for the term of fourteen years, the sole and exclusive right and liberty of making, using, and vending to others, to be used, the said invention, so far as the said Samuel G. Dorr was the Inventor according to the allegations, and suggestions

46X

of the said Petition. In Testimony whereof I have caused these Letters to be made Patent, and the seal of the United States to be hereunto affixed.

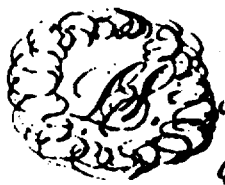

Given under my hand at the City of Philadelphia this twentieth day of October in the Year of our Lord One thousand seven hundred and ninety two, and of the Independence of the United States of America the seventeenth.

G. Washington.

By the President

Th. Jefferson.

City of Philadelphia 20th October 1792.

I do hereby certify that the foregoing Letters Patent were delivered to me in pursuance of the act entitled "an act to promote the progress of ... useful arts" that I have examined the same and find them conformable to the said act.

Edm Randolph.

Attorney General of the U.S.

(552 Words)