US009174145B2

(12) **United States Patent**
Weissenbach et al.

(10) **Patent No.: US 9,174,145 B2**
(45) **Date of Patent: Nov. 3, 2015**

(54) **BAG FOR A CIRCUIT OF A BIOLOGICAL LIQUID TREATMENT INSTALLATION**

(75) Inventors: **Jean-Louis Weissenbach**, Ville (FR); **Sebastien Cirou**, Schiltigheim (FR); **Virginie Buisson**, Wolfisheim (FR)

(73) Assignee: **EMD Millipore Corporation**, Billerica, MA (US)

(*) Notice: Subject to any disclaimer, the term of this patent is extended or adjusted under 35 U.S.C. 154(b) by 180 days.

(21) Appl. No.: **13/161,983**

(22) Filed: **Jun. 16, 2011**

(65) **Prior Publication Data**

US 2012/0145616 A1 Jun. 14, 2012

(30) **Foreign Application Priority Data**

Jun. 23, 2010 (FR) 10 55026

(51) **Int. Cl.**

B01D 15/12	(2006.01)
C07K 1/16	(2006.01)
G01N 30/88	(2006.01)
B01D 15/24	(2006.01)

(52) **U.S. Cl.**

CPC . ***B01D 15/12*** (2013.01); ***C07K 1/16*** (2013.01); ***G01N 30/88*** (2013.01); *B01D 15/24* (2013.01); *G01N 2030/8881* (2013.01)

(58) **Field of Classification Search**

CPC B01D 15/12; B01D 15/24; G01N 30/88; G01N 2030/8881; C07K 1/16

USPC 210/635, 656, 198.2; 137/343, 377

See application file for complete search history.

(56) **References Cited**

U.S. PATENT DOCUMENTS

2,413,853	A	1/1947	Zademach et al.
2,787,403	A	4/1957	Carr et al.
2,941,575	A	6/1960	Malmberg et al.
3,022,229	A	2/1962	Heden
3,179,117	A	4/1965	Gibson et al.
3,667,487	A	6/1972	Schoenbeck et al.

(Continued)

FOREIGN PATENT DOCUMENTS

CN	101281204	A	10/2008
DE	10 2006 059 459	A1	7/2008

(Continued)

OTHER PUBLICATIONS

Notice of Allowance mailed Oct. 17, 2012 in U.S. Appl. No. 13/420,906, now US Patent No. 8,343,356.

(Continued)

Primary Examiner — Ernest G Therkorn

(74) *Attorney, Agent, or Firm* — Nields, Lemack & Frame, LLC

(57) **ABSTRACT**

The invention concerns a bag comprising a first conduit (**13**J), a second conduit (**13**K), the first section (**13J1**) of the first conduit (**13**J) and the first section (**13K1**) of the second conduit (**13**K) being opposite; a third conduit (**13**L) linking said first respective ends (**13J2**, **13K2**) of said first respective sections (**13J1**, **13K1**); a fourth conduit (**13**M) linking said second respective ends (**13J3**, **13K3**) of said first respective sections (**13J1**, **13K1**); a fifth conduit (**13**N) linking both said second end (**13J3**) of said first section (**13J1**) and said first end (**13M1**) of said fourth conduit (**13**M), and said fifth conduit (**13**N) linking both said first end (**13K2**) and said second end (**13L2**) of said third conduit (**13**L); said first conduit (**13**J) and said second conduit (**13**K) each being connected to a chromatography column connector (**11**M).

22 Claims, 7 Drawing Sheets

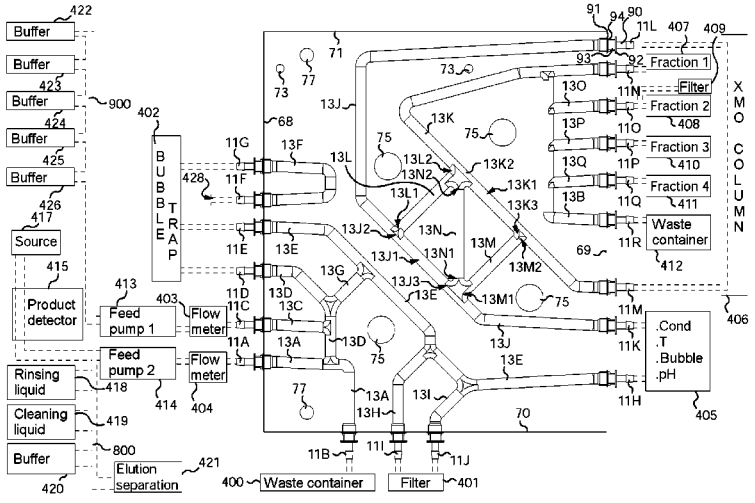

(56) **References Cited**

U.S. PATENT DOCUMENTS

3,772,154	A	11/1973	Isenberg et al.	
3,774,762	A	11/1973	Lichtenstein	
4,113,623	A	9/1978	Koether et al.	
4,332,750	A	6/1982	Roggenburg, Jr. et al.	
4,370,983	A	2/1983	Lichtenstein	
4,784,751	A	11/1988	McGehee	
4,790,118	A	12/1988	Chilcoate	
4,852,851	A	8/1989	Webster	
4,855,236	A	8/1989	Levin	
4,915,119	A	4/1990	Franklin	
5,019,257	A	5/1991	Suzuki et al.	
5,141,866	A	8/1992	Levin	
5,265,912	A	11/1993	Natividad	
5,290,518	A	3/1994	Johnson	
5,342,463	A	8/1994	Addeo et al.	
5,520,885	A	5/1996	Coelho et al.	
5,628,908	A	5/1997	Kamen et al.	
5,645,723	A	7/1997	Fujishiro et al.	
5,678,568	A	10/1997	Uchikubo et al.	
5,711,916	A	1/1998	Riggs et al.	
5,738,645	A	4/1998	Plotkin	
5,985,653	A	11/1999	Armstrong et al.	
6,073,942	A	6/2000	Heneveld, Sr.	
6,099,734	A	8/2000	Boggs et al.	
6,129,099	A	10/2000	Foster et al.	
6,146,124	A	11/2000	Coelho et al.	
6,186,998	B1	2/2001	Inuzuka et al.	
6,213,334	B1	4/2001	Coelho et al.	
6,228,255	B1	5/2001	Peterson et al.	
6,232,115	B1	5/2001	Coelho et al.	
6,303,025	B1	10/2001	Houchens	
6,361,642	B1	3/2002	Bellamy et al.	
6,670,169	B1	12/2003	Schob et al.	
6,808,675	B1	10/2004	Coelho et al.	
6,902,706	B1	6/2005	Colin et al.	
6,982,063	B2	1/2006	Hamel et al.	
7,153,286	B2	12/2006	Busby et al.	
7,326,355	B2	2/2008	Graetz et al.	
7,485,224	B2	2/2009	Jones et al.	
7,648,627	B2	1/2010	Beden et al.	
7,666,602	B2	2/2010	Ammann et al.	
7,867,189	B2	1/2011	Childers et al.	
7,935,074	B2	5/2011	Plahey et al.	
7,935,253	B2	5/2011	Beulay et al.	
8,114,276	B2	2/2012	Childers et al.	
8,163,172	B2	4/2012	Beulay et al.	
8,343,356	B2	1/2013	Beulay et al.	
8,383,397	B2	2/2013	Wojciechowski et al.	
8,505,959	B2	8/2013	Darling, III	
8,506,798	B2	8/2013	Beulay et al.	
8,557,113	B2	10/2013	Beulay et al.	
8,900,454	B2	12/2014	Cirou et al.	
8,906,229	B2	12/2014	Cirou et al.	
8,916,045	B2	12/2014	Reinbigler et al.	
8,921,096	B2	12/2014	Weissenbach et al.	
2003/0040104	A1	2/2003	Barbera-Guillem	
2004/0031507	A1	2/2004	Ross et al.	
2004/0104153	A1	6/2004	Yang	
2004/0222341	A1	11/2004	Breda et al.	
2004/0259240	A1	12/2004	Fadden	
2005/0254879	A1	11/2005	Gundersen et al.	
2006/0024212	A1	2/2006	Hwang	
2006/0057030	A1	3/2006	Lee et al.	
2006/0118472	A1*	6/2006	Schick et al.	210/198.2
2006/0226333	A1	10/2006	Newkirk	
2007/0095364	A1	5/2007	Watt	
2007/0112297	A1	5/2007	Plahey et al.	
2007/0128087	A1	6/2007	Cannizzaro et al.	
2007/0199875	A1	8/2007	Moorey et al.	
2007/0278155	A1	12/2007	Lo et al.	
2008/0023045	A1	1/2008	Miller et al.	
2008/0057274	A1	3/2008	Hagiwara et al.	
2008/0213143	A1	9/2008	Gyonouchi et al.	
2008/0254962	A1*	10/2008	Mizuo et al.	493/179
2009/0050756	A1	2/2009	Newkirk et al.	
2009/0101219	A1	4/2009	Martini et al.	
2009/0101552	A1	4/2009	Fulkerson et al.	
2009/0111179	A1	4/2009	Hata et al.	
2009/0180933	A1	7/2009	Kauling et al.	
2009/0215602	A1	8/2009	Min et al.	
2009/0294349	A1	12/2009	Beulay et al.	
2009/0314970	A1	12/2009	McAvoy et al.	
2010/0108920	A1	5/2010	Tatarek	
2010/0126927	A1	5/2010	Blankenstein et al.	
2010/0187167	A1	7/2010	Reinbigler et al.	
2010/0204765	A1	8/2010	Hall et al.	
2010/0206785	A1	8/2010	Beulay et al.	
2010/0234805	A1	9/2010	Kaufmann et al.	
2011/0174716	A1	7/2011	Beulay et al.	
2011/0297866	A1	12/2011	Weber	
2011/0303306	A1	12/2011	Weber	
2012/0006736	A1	1/2012	Cirou et al.	
2012/0018018	A1	1/2012	Cirou et al.	
2012/0031510	A1	2/2012	Weissenbach et al.	
2012/0138173	A1	6/2012	Cirou et al.	
2012/0138522	A1	6/2012	Cirou et al.	
2012/0160342	A1	6/2012	Weissenbach et al.	
2012/0160356	A1	6/2012	Reinbigler et al.	
2012/0168390	A1	7/2012	Beulay et al.	
2012/0248025	A1	10/2012	Reinbigler et al.	
2013/0087490	A1	4/2013	Beulay et al.	
2013/0193073	A1	8/2013	Hogard et al.	
2013/0210130	A1	8/2013	Larcher et al.	
2013/0236130	A1	9/2013	Cirou et al.	
2013/0240065	A1	9/2013	Weissenbach et al.	
2014/0069537	A1	3/2014	Cirou et al.	
2015/0008184	A1	1/2015	Cirou et al.	
2015/0013773	A1	1/2015	Cirou et al.	

FOREIGN PATENT DOCUMENTS

DE	10 2008 003 823	A1	7/2008
EP	0479047	A2	4/1992
EP	0803723	A1	10/1997
EP	1195171	A2	4/2002
EP	1239277	A1	9/2002
EP	2044964	A2	4/2009
EP	2130903	A1	12/2009
EP	2208534	A1	7/2010
EP	2228635	A1	9/2010
FR	2241615	A1	3/1975
FR	2673853	A1	9/1992
FR	2931838	A1	12/2009
FR	2940145	A1	6/2010
GB	1434786	A	5/1976
GB	2448858	A	11/2008
JP	62-81543	A	4/1987
JP	2010-502405	A	1/2010
WO	00/48703	A1	8/2000
WO	2005/090403	A2	9/2005
WO	2006/043895	A1	4/2006
WO	2007/094254	A1	8/2007
WO	2008/033788	A2	3/2008
WO	2008/064242	A2	5/2008
WO	2008/071351	A1	6/2008
WO	2008/120021	A1	10/2008
WO	2009/017614	A1	2/2009
WO	2009/073567	A1	6/2009
WO	2009/157852	A1	12/2009
WO	2010/084432	A1	7/2010
WO	2010/094249	A1	8/2010

OTHER PUBLICATIONS

Chinese Communication, with English translation, dated Sep. 27, 2012 in co-pending Chinese patent application No. CN 201010004496.1.

Final Rejection mailed Jan. 24, 2013 in co-pending U.S. Appl. No. 12/685,140.

French Search Report dated Feb. 9, 2009 in co-pending foreign patent application No. FR 0853629.

French Search Report dated May 24, 2011 in co-pending foreign patent application No. FR 1056421.

(56) **References Cited**

OTHER PUBLICATIONS

Extended European Search Report for co-pending foreign patent application No. EP 09290938.1, mailed Apr. 6, 2010, 5 pages.
French Search Report dated Nov. 17, 2011 in co-pending foreign patent application No. FR 1152556.
Office Action mailed Jun. 11, 2012 in co-pending U.S. Appl. No. 13/420,906.
Office Action mailed Jun. 5, 2012 in co-pending U.S. Appl. No. 12/592,901.
French Search Report dated Nov. 22, 2010 in co-pending foreign patent application No. FR 1054517.
French Search Report dated Nov. 22, 2010 in co-pending foreign patent application No. FR 1054516.
French Search Report dated Sep. 24, 2010 in co-pending foreign patent application No. FR 1050209.
French Search Report dated Nov. 12, 2010 in co-pending foreign patent application No. FR 1055025.
French Search Report dated Feb. 3, 2011 in corresponding foreign patent application No. FR 1055026.
French Search Report dated Nov. 25, 2010 in co-pending foreign patent application No. FR 1054514.
French Search Report dated Oct. 16, 2009 in co-pending French Patent Application No. FR 0950435.
International Search Report/Written Opinion mailed Sep. 30, 2011 in co-pending PCT Application No. PCT/IB2011/052447.
International Search Report/Written Opinion mailed Sep. 28, 2011 in co-pending PCT Application No. PCT/IB2011/052450.
International Search Report mailed Jun. 8, 2011 in co-pending PCT Application No. PCT/IB2011/050089.
International Search Report mailed Sep. 29, 2011 in co-pending PCT Application No. PCT/IB2011/052676.
International Search Report mailed Aug. 29, 2011 in co-pending PCT Application No. PCT/IB2011/052679.
International Search Report mailed Aug. 2, 2011 in co-pending PCT Application No. PCT/IB2011/052448.
Office Action-Restriction-mailed Jan. 27, 2012 in co-pending U.S. Appl. No. 12/685,140.
Office Action mailed Jun. 28, 2012 in co-pending U.S. Appl. No. 12/685,140.
Office Action mailed Feb. 22, 2013 in co-pending U.S. Appl. No. 13/688,255.
Office Action—Restriction—mailed Apr. 2, 2013 in co-pending U.S. Appl. No. 13/153,804.
Notice of Allowance mailed May 6, 2013 in co-pending U.S. Appl. No. 13/153,804.
Office Action mailed Oct. 25, 2013 in co-pending U.S. Appl. No. 13/187,698.
Office Action mailed Dec. 17, 2013 in co-pending U.S. Appl. No. 12/685,140.
Office Action mailed Jan. 16, 2014 in co-pending U.S. Appl. No. 13/004,425.
Notice of Allowance mailed Feb. 18, 2014 in co-pending U.S. Appl. No. 13/116,506.
Notice of Allowance mailed Feb. 3, 2014 in co-pending U.S. Appl. No. 13/430,734.
Office Action mailed Jan. 6, 2015 in co-pending U.S. Appl. No. 12/685,140.
Final Rejection mailed Feb. 5, 2015 in co-pending U.S. Appl. No. 13/414,843.
Notice of Allowance mailed Feb. 2, 2015 in co-pending U.S. Appl. No. 13/004,425.
Final Rejection mailed Mar. 11, 2015 in co-pending U.S. Appl. No. 14/080,826.
Notice of Allowance mailed Mar. 18, 2014 in co-pending U.S. Appl. No. 13/116,508.
Final Rejection mailed Mar. 26, 2014 in co-pending U.S. Appl. No. 13/187,698.
Notice of Allowance mailed Apr. 1, 2014 in co-pending U.S. Appl. No. 13/153,809.
Written Opinion of the International Searching Authority mailed Jun. 8, 2011 in co-pending PCT application No. PCT/IB2011/050089.
International Preliminary Report on Patentability mailed Jul. 26, 2012 in co-pending PCT application No. PCT/IB2011/050089.
International Preliminary Report on Patentability mailed Dec. 20, 2012 in co-pending PCT application No. PCT/IB2011/052447.
Written Opinion of the International Searching Authority mailed Sep. 29, 2011 in co-pending PCT application No. PCT/IB32011/052676.
International Preliminary Report on Patentability mailed Jan. 10, 2013 in co-pending PCT application No. PCT/IB2011/052676.
Written Opinion of the International Searching Authority mailed Aug. 29, 2011 in corresponding PCT application No. PCT/IB2011/052679.
International Preliminary Report on Patentability mailed Jan. 10, 2013 in corresponding PCT application No. PCT/IB2011/052679.
Written Opinion of the International Searching Authority mailed Aug. 2, 2011 in co-pending PCT application No. PCT/IB2011/052448.
International Preliminary Report on Patentability mailed Dec. 20, 2012 in co-pending PCT application No. PCT/IB2011/052448.
International Preliminary Report on Patentability mailed Dec. 20, 2012 in co-pending PCT application No. PCT/IB2011/052450.
International Search Report mailed Sep. 4, 2012 in co-pending PCT application No. PCT/IB2012/051424.
Notice of Allowance mailed May 13, 2013 in co-pending U.S. Appl. No. 13/161,975.
Office Action mailed May 9, 2013 in co-pending U.S. Appl. No. 12/592,901.
Notice of Allowance mailed Apr. 14, 2014 in co-pending U.S. Appl. No. 13/116,508.
Notice of Allowance mailed Apr. 14, 2014 in co-pending U.S. Appl. No. 13/153,809.
Final Rejection mailed Jun. 23, 2014 in co-pending U.S. Appl. No. 12/685,140.
Office Action mailed Aug. 25, 2014 in co-pending U.S. Appl. No. 13/004,425.
Office Action mailed Jul. 30, 2014 in co-pending U.S. Appl. No. 14/080,826.
Notice of Allowance mailed Aug. 11, 2014 in co-pending U.S. Appl. No. 13/116,508.
Office Action mailed Jul. 24, 2014 in co-pending U.S. Appl. No. 13/187,698.
Notice of Allowance mailed Aug. 8, 2014 in co-pending U.S. Appl. No. 13/153,809.
Notice of Allowance mailed Jul. 2, 2014 in co-pending U.S. Appl. No. 13/430,734.
Notice of Allowance mailed Aug. 12, 2014 in co-pending U.S. Appl. No. 13/430,734.
Korean communication, with English translation, dated Jul. 31, 2014 in co-pending Korean patent application No. 10-2013-7000355.
Korean communication, with English translation, dated Jul. 31, 2014 in co-pending Korean patent application No. KR 10-2013-7001692.
Korean communication, with English translation, dated Jul. 31, 2014 in co-pending Korean patent application No. KR 10-2013-7000366.
Korean communication, with English translation, dated Jul. 31, 2014 in co-pending Korean patent application No. KR 10-2013-7000356.
Notice of Allowance mailed Jun. 18, 2013 in U.S. Appl. No. 13/688,255, now U.S. Pat. No. 8,506,798.
Office Action—Restriction—mailed Oct. 15, 2013 in co-pending U.S. Appl. No. 13/004,425.
Office Action mailed Oct. 9, 2013 in co-pending U.S. Appl. No. 13/116,508.
Office Action mailed Oct. 18, 2013 in co-pending U.S. Appl. No. 13/116,508.
Notice of Allowance mailed Sep. 6, 2013 in co-pending U.S. Appl. No. 12/592,901, now U.S. Pat. No. 8,557,113.
Office Action mailed Oct. 23, 2013 in co-pending U.S. Appl. No. 13/153,809.
Extended European Search Report and Search Opinion received for EP Patent Application No. 10290005.7, mailed on May 17, 2010, 5 pages.

(56) **References Cited**

OTHER PUBLICATIONS

International Preliminary Report on Patentability received for PCT application No. PCT/IB2010/050102, mailed on Aug. 4, 2011, 8 pages.
International Search Report and Written Opinion received for PCT application No. PCT/IB2010/050102, mailed on May 7, 2010, 10 pages.
Notice of Allowance mailed Sep. 3, 2014 in co-pending U.S. Appl. No. 13/116,508.
Notice of Allowance mailed Sep. 2, 2014 in co-pending U.S. Appl. No. 13/153,809.
Notice of Allowance mailed Sep. 29, 2014 in co-pending U.S. Appl. No. 13/430,734.
Notice of Allowance mailed Nov. 6, 2014 in co-pending U.S. Appl. No. 13/187,698.
Office Action mailed Dec. 11, 2014 in co-pending U.S. Appl. No. 13/414,843.
Notice of Allowance mailed Jul. 2, 2015 in co-pending U.S. Appl. No. 13/153,804.
Notice of Allowance mailed Jul. 13, 2015 in co-pending U.S. Appl. No. 14/080,826.
Notice of Allowance mailed Jul. 28, 2015 in co-pending U.S. Appl. No. 14/080,826.
Notice of Allowance mailed Jul. 20, 2015 in co-pending U.S. Appl. No. 13/161,975.
Final Rejection mailed Aug. 19, 2015 in co-pending U.S. Appl. No. 12/685,140.
Office Action mailed Aug. 7, 2015 in co-pending U.S. Appl. No. 13/414,843.
Office Action—Restriction—mailed Apr. 25, 2013 in co-pending U.S. Appl. No. 13/161,975.

* cited by examiner

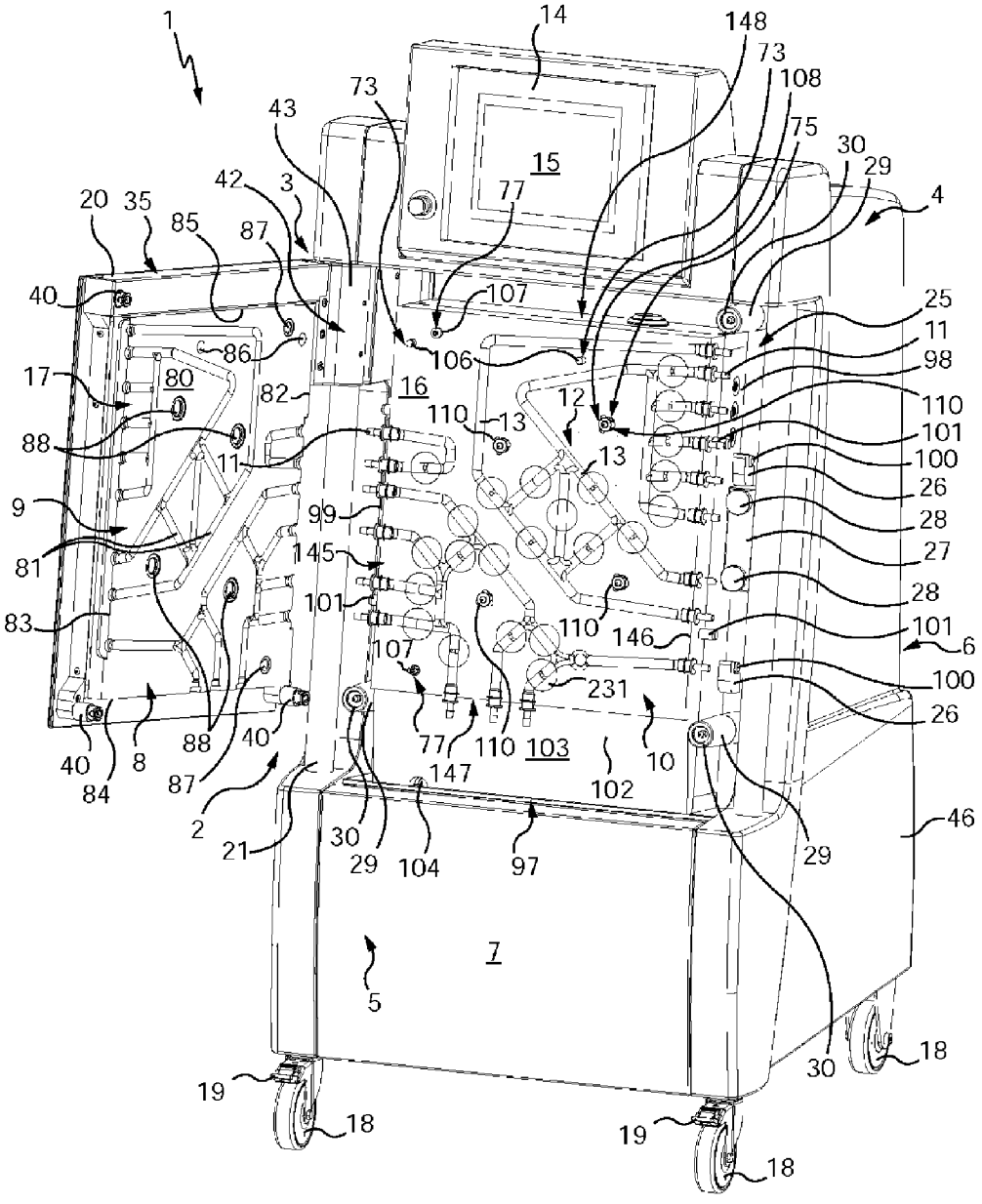
1
14
148
73
108
75
30
29
4
15
43
73
42
3
77
20
35
85
87
40
107
25
11
98
86
106
17
80
82
16
12
110
13
110
101
88
11
13
100
26
9
99
28
81
145
27
101
28
83
110
146
101
6
107
231
100
26
40
8
88
40
77
110
103
10
84
87
147
102
2
21
30
29
104
97
29
46
7
5
30
18
19
18
19
18

Fig. 1

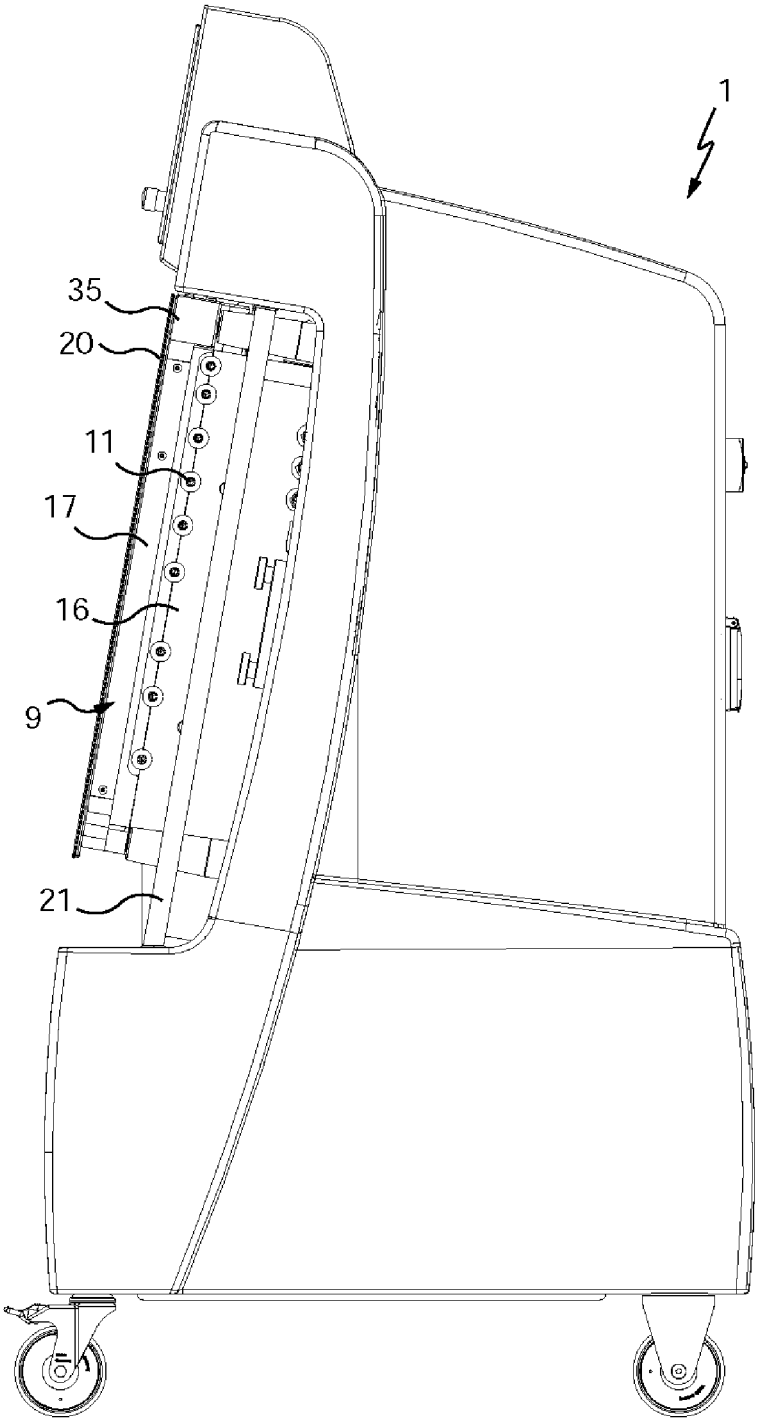

Fig. 2

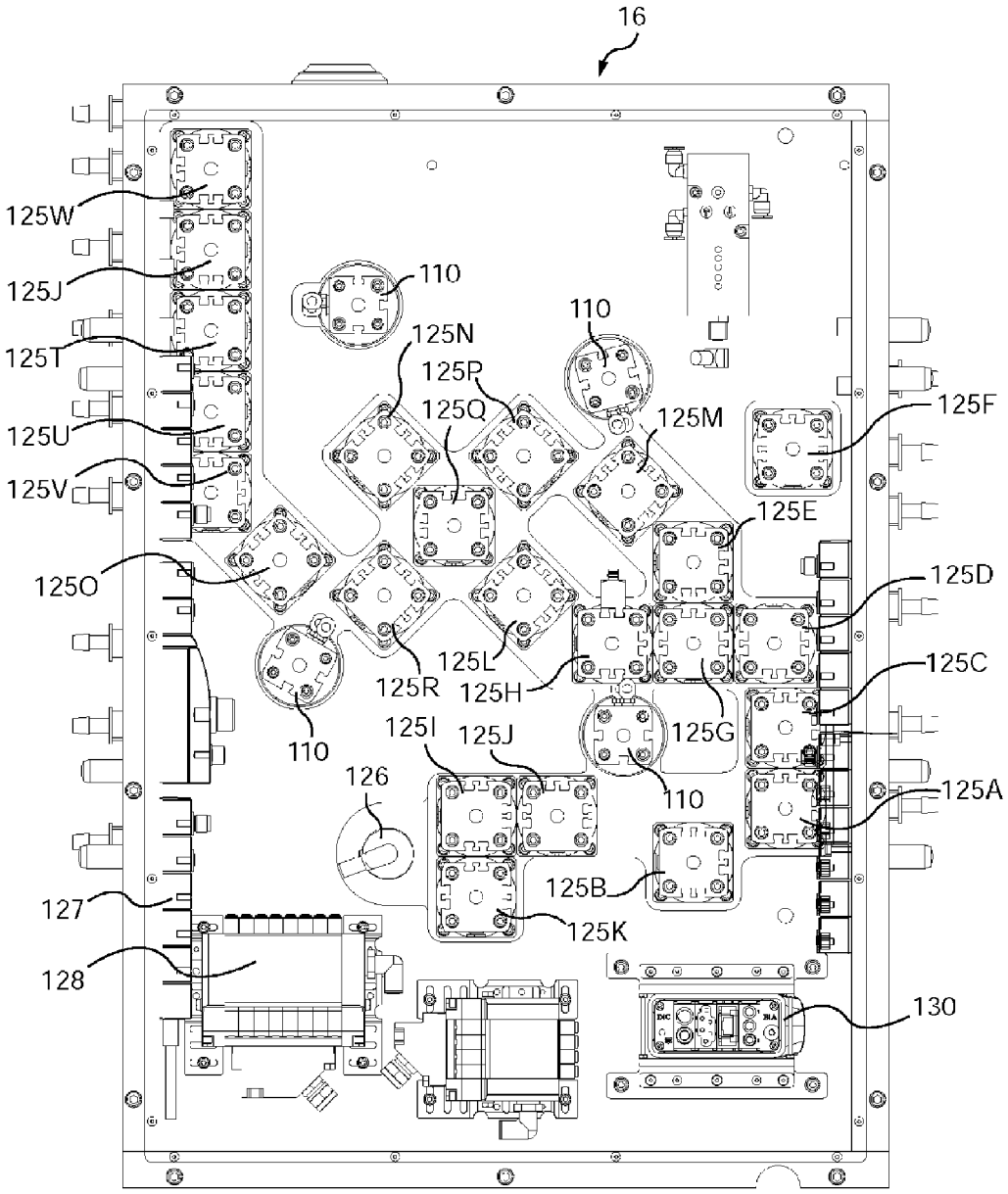
16
125W
125J
125T
125U
125V
125O
110
125N
125P
125Q
110
125M
125F
125E
125D
125C
125A
125L
125R
125H
125G
125I
125J
110
126
125B
125K
127
128
130

Fig. 3

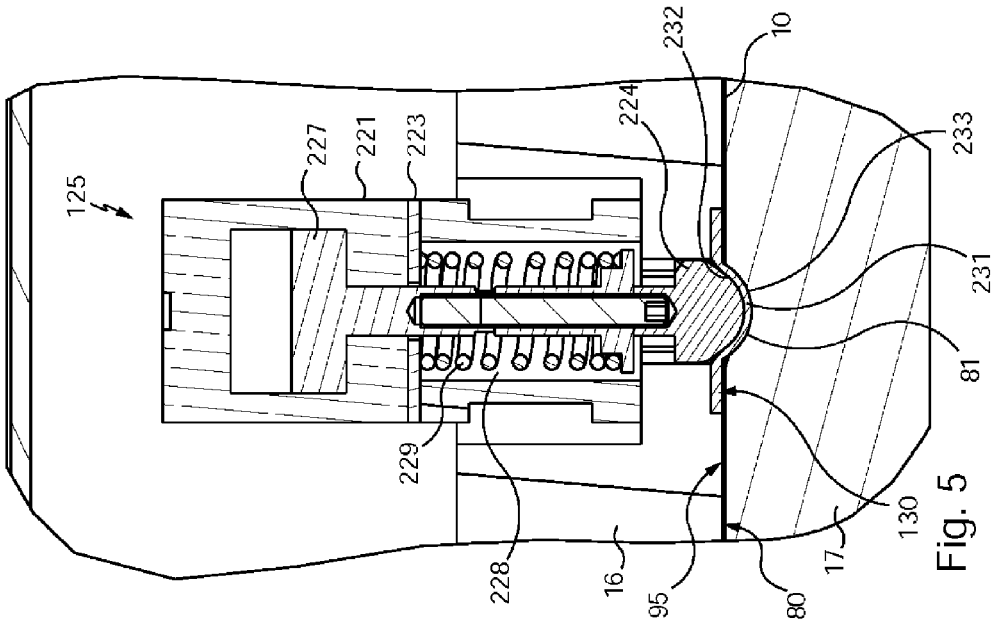
125
227
221
223
224
232
10
233
231
81
229
228
16
95
80
17
130

Fig. 5

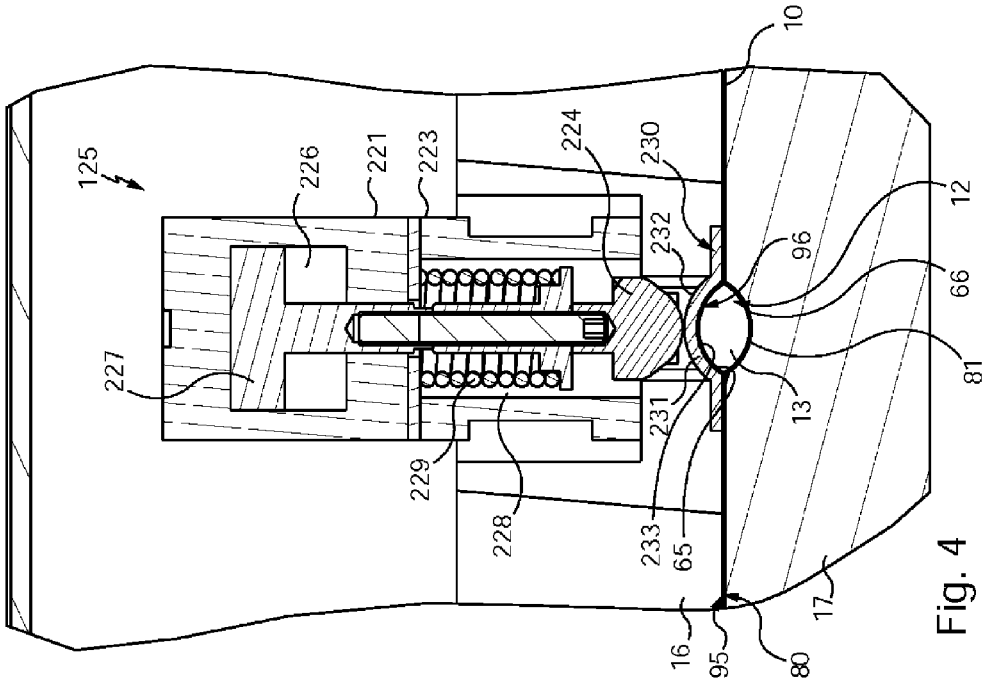
125
226
221
223
224
230
232
10
12
96
66
81
227
229
228
231
233
65
13
16
95
80
17

Fig. 4

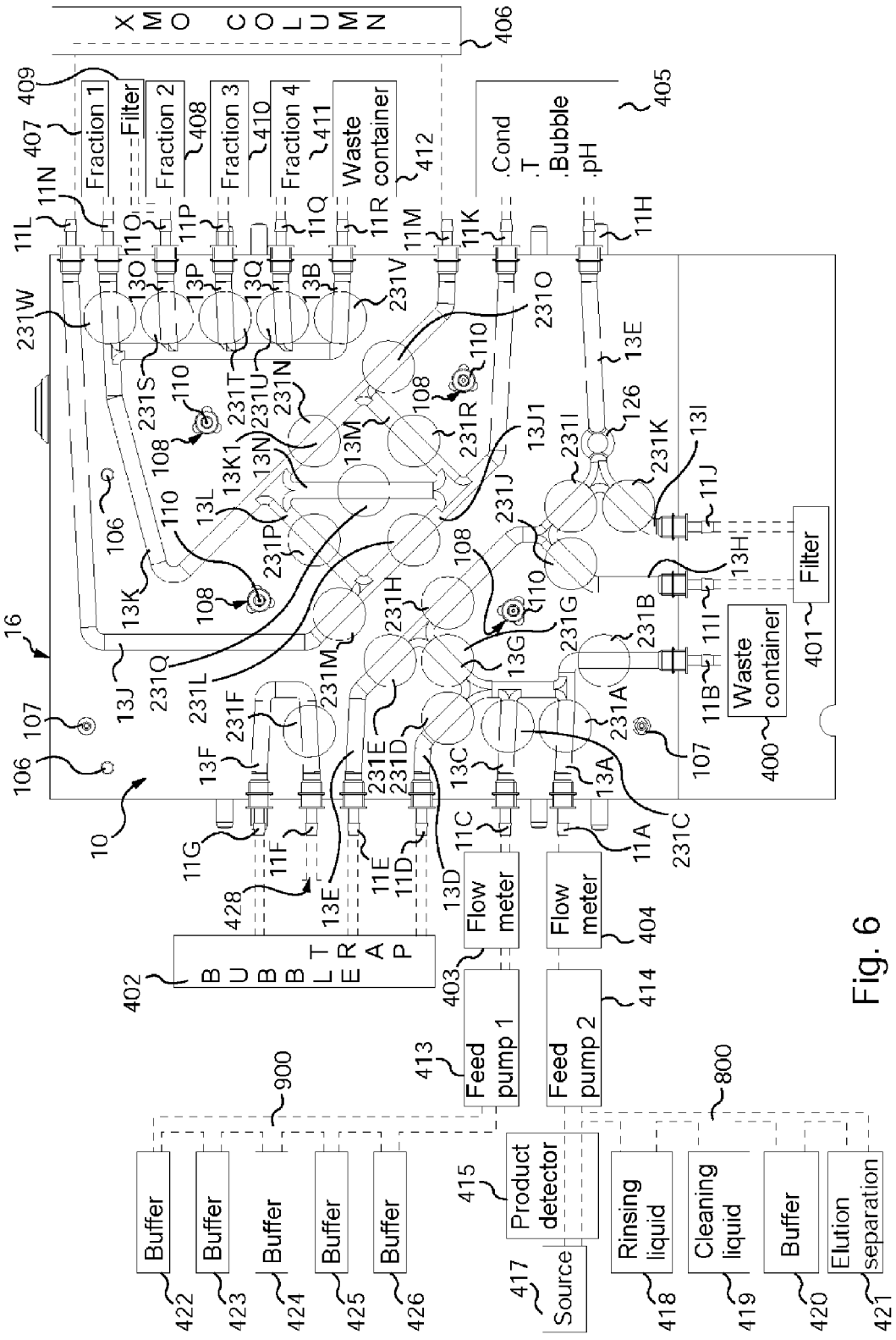
XMO COLUMN
Fraction 1
Filter
Fraction 2
Fraction 3
Fraction 4
Waste container
Cond
T
Bubble
pH
Filter
Waste container
BUBBLE TRAP
Flow meter
Flow meter
Feed pump 1
Feed pump 2
Buffer
Buffer
Buffer
Buffer
Buffer
Product detector
Source
Rinsing liquid
Cleaning liquid
Buffer
Elution separation

Fig. 6

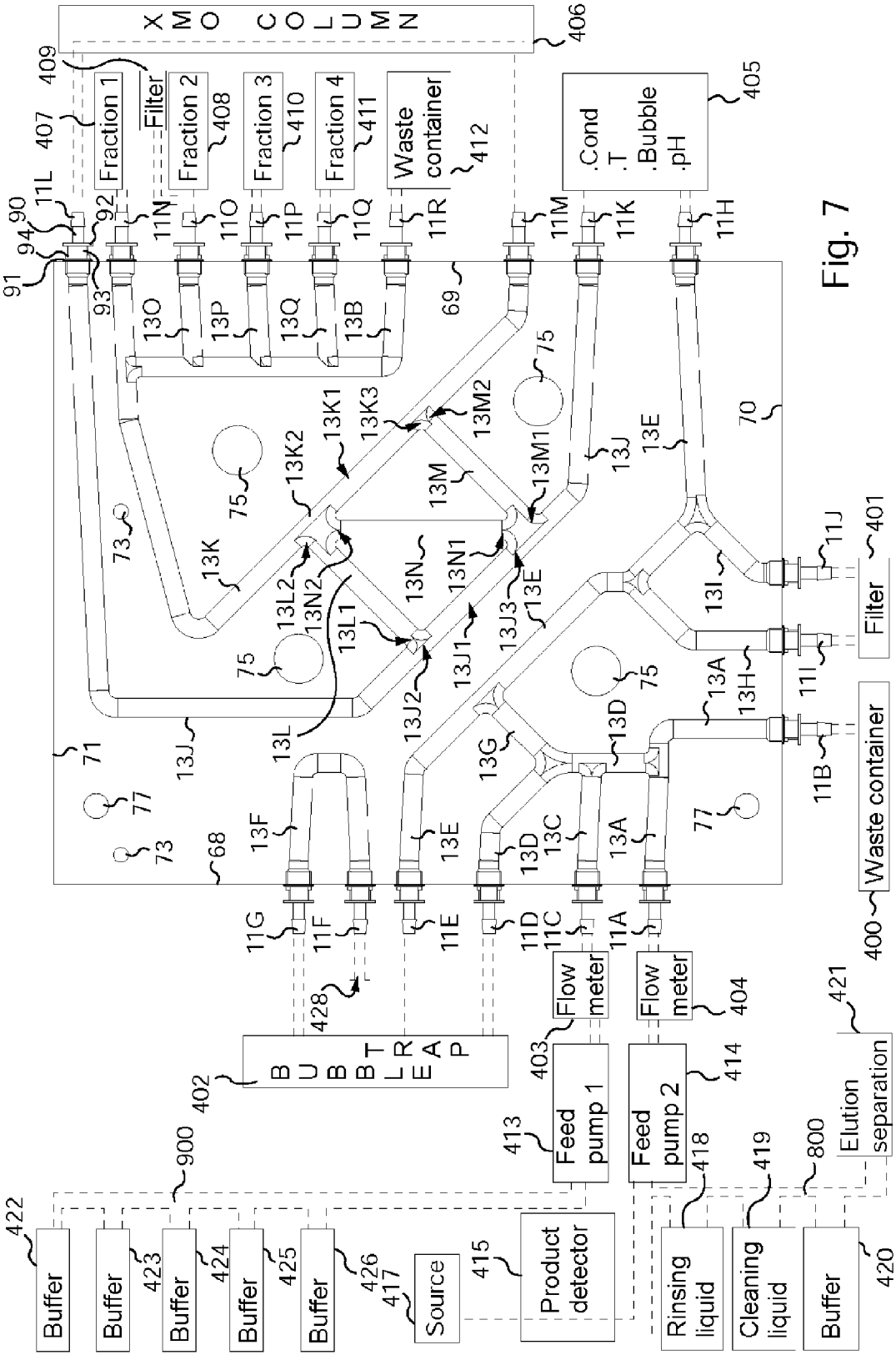
XMO COLUMN
Fraction 1
Filter
Fraction 2
Fraction 3
Fraction 4
Waste container
.Cond
.T
.Bubble
.pH
Filter
Waste container
BUBBLE TRAP
Flow meter
Flow meter
Feed pump 1
Feed pump 2
Elution separation
Buffer
Buffer
Buffer
Buffer
Buffer
Source
Product detector
Rinsing liquid
Cleaning liquid
Buffer

Fig. 7

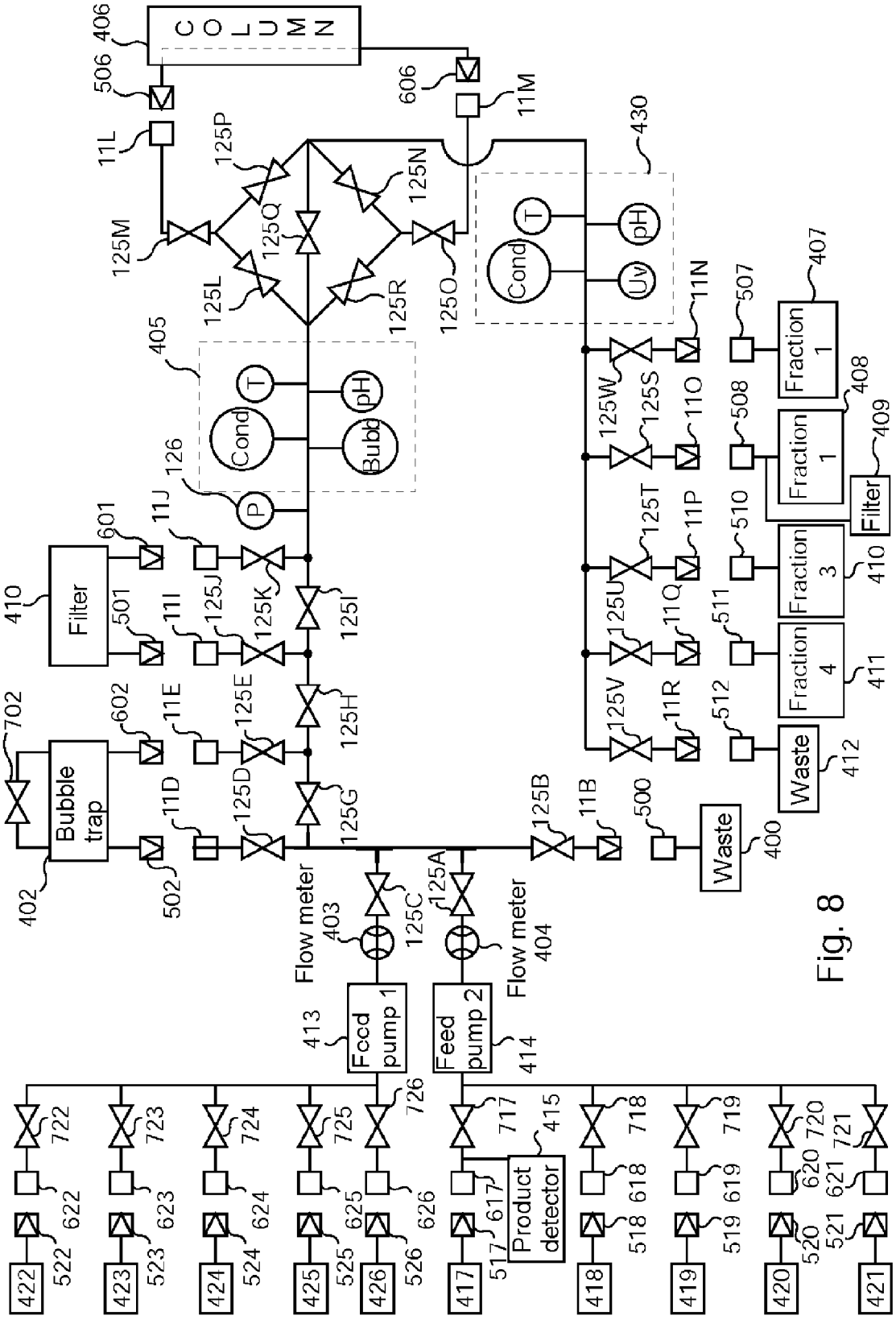
COLUMN
406
506
606
11L
11M
125M
125P
125Q
125N
125L
125R
125O
405
430
Cond
T
pH
Bubb
Uv
126
P
11J
601
410
Filter
501
11I
125J
125K
125I
702
602
11E
125E
125H
Bubble trap
11D
125D
125G
125B
11B
500
402
502
Flow meter 403
125C
125A
Flow meter 404
Waste 400
413
Feed pump 1
Feed pump 2
414
11N
125W
125S
11O
507
508
125T
11P
510
125U
11Q
511
125V
11R
512
Waste 412
Fraction 4
411
Fraction 3
410
Fraction 1
408
Fraction 1
407
Filter
409
422
423
424
425
426
417
418
419
420
421
522
523
524
525
526
517
518
519
520
521
622
623
624
625
626
617
618
619
620
621
722
723
724
725
726
717
718
719
720
721
Product detector
415

Fig. 8

BAG FOR A CIRCUIT OF A BIOLOGICAL LIQUID TREATMENT INSTALLATION

The invention relates to a bag for a device of a biological liquid treatment installation, particularly but not exclusively for purifying a biopharmaceutical liquid in order to obtain products such as monoclonal antibodies, vaccines or recombinant proteins.

The invention also concerns a device of a biological liquid treatment installation.

It is known that biopharmaceutical liquids are in general obtained by culture in a bioreactor and that they must then be treated to achieve the required characteristics of purity, concentration, absence of viruses, etc.

The purification is carried out by means of a succession of treatments such as clarification, to eliminate the residues from the bioreactor culture, and viral filtration sometimes followed by diafiltration and concentration by tangential flow filtration (TFF). Other operations exist concerning purification, such as chromatography (XMO).

The purification treatments are essentially carried out by filtering operations in a circuit leading to a container for collecting the treated liquid.

A number of types of container containing liquids can be connected to the inlet of the circuit, such as the source container that contains the product to be treated, but also the containers containing a cleaning liquid such as sodium hydroxide (NaOH), a rinsing liquid such as pure water for injection or a buffer liquid such as a saline solution. In addition to the container for collecting the treated liquid, various other containers for collecting cleaning, rinsing or buffer liquid, or for collecting residues, can be connected to the outlet of the circuit.

In a production context the liquid treatments can be carried out sequentially, the collecting container for the first treatment potentially becoming the source container for the next treatment, and so on until the last treatment is carried out.

These treatments are conventionally carried out in dedicated installations comprising stainless steel pipes and other parts such as tanks or filter housings, which necessitate operations before and after the actual treatment, which are relatively onerous, in particular operations of cleaning after use.

Within the last few years, these treatments have alternatively been carried out in installations in which the components in contact with the liquid are single-use components.

Such single-use components have the advantage of avoiding cleaning operations, but, to provide the required degree of security, the implementation of an installation with such components necessitates operations of selection, assembly and verification which are relatively complex.

This is especially the case when the number of pipes and other circuit components (connectors, valves, etc.) is high and/or when the operating pressure is high.

According to a first aspect, the invention is directed to providing a bag enabling the simple, economical and convenient implementation of treatments for biological liquid.

For this, the invention concerns a bag for a circuit of an installation for treatment of a biological liquid by chromatography, comprising:

- a plurality of connectors and a network for conveying liquid between said connectors, said conveying network being formed by a plurality of conduits; and
- two flexible films fastened to each other, said conduits being formed between the two said flexible films;
- wherein a first conduit is provided with a first section which has a first end and a second end which is an opposite end to the first end;

- wherein a second conduit is provided with a first section which has a first end and a second end which is an opposite end to the first end, the first section of the first conduit and the first section of the second conduit being opposite;
- wherein a third conduit has a first end and a second end which is an opposite end to the first end, which third conduit links said respective first ends of said respective first sections of said first conduit and said second conduit respectively by its first end and its second end;
- wherein a fourth conduit has a first end and a second end which is an opposite end to the first end, which fourth conduit links said respective second ends of said respective first sections of said first conduit and said second conduit respectively by its first end and its second end;
- wherein a fifth conduit has a first end and a second end which is an opposite end to the first end, said fifth conduit linking both the second end of said first section of said first conduit and said first end of said fourth conduit by its first end, and said fifth conduit linking both said first end of said first section of said second conduit and said second end of said third conduit by its second end; and
- said first conduit being connected to a chromatography column connector by said first end of its first section, and said second conduit being connected to a chromatography column connector by said second end of its first section;
- whereby the bag is configured such that the liquid to treat passes into said chromatography column via one of said first and second conduits, exits via the other of said first and second conduits, and the liquid to treat may avoid said chromatography column by passing into said fifth conduit.

By virtue of the invention, the bag comprises an inlet point at the intersection of the first, fourth and fifth conduits, an outlet point at the intersection of the second, third and fifth conduits, a first intermediate point at the intersection of the first and third conduits, here linking a chromatography column connector, and a second intermediate point at the intersection of the second and fourth conduits, here linking the other chromatography column connector.

The concept of inlet point, outlet point and intermediate points means that the respective conduits are directly connected together, that is to say without any intermediate section or component.

The bag is configured for the liquid to pass between the inlet point and the outlet point when the first sections of the first and second conduits and the third and fourth conduits are pinched, and when the fifth conduit is open.

The bag is configured for the liquid to pass between the inlet point and the first intermediate point then between the second intermediate point and the outlet point when the third, fourth and fifth conduits are pinched, and when the first sections of the first and second conduits are open.

The bag is configured for the liquid to pass between the inlet point and the second intermediate point then between the first intermediate point and the outlet point when the first sections of the first and second conduits and the fifth conduit are pinched, and when the third and fourth conduits are open.

Furthermore, the bag according to the invention fully complies with the constraints imposed upon a circuit in two dimensions (which prevents the crossing of conduits), by virtue of the aforementioned arrangement of the first, second, third, fourth, and fifth conduits.

According to particularly simple, convenient and economical features of the bag according to the invention:

- the bag comprises a sixth conduit between a feed pump connector and a waste container connector;
- the bag comprises a seventh conduit which extends from a bubble trap connector until it enters said sixth conduit;

the bag comprises an eighth conduit which extends from a feed pump connector until it enters said seventh conduit;

the bag comprises at least a ninth conduit which extends between a bubble trap connector and an instrumentation connector;

the bag comprises at least a tenth conduit which extends from a filter connector until it enters said ninth conduit;

the bag comprises an eleventh conduit which extends between a bubble trap connector and an air connector;

said first end of said first section of said second conduit is connected to at least one fraction container connector.

the bag comprises a twelfth conduit which extends from a waste container connector until it enters said second conduit; and

said second end of said first section of said first conduit is connected to an instrumentation connector.

According to a second aspect, the invention also concerns a device for an installation for biological liquid treatment by chromatography comprising a circuit, which circuit comprises:

a bag provided with a plurality of connectors and a network for conveying liquid between said connectors, said conveying network being formed by a plurality of conduits, the bag further comprising two flexible films fastened to each other, said conduits being formed between said two flexible films;

a press comprising a first shell and a second shell mounted on said first shell, said first shell and second shell cooperating with said bag to form the conduits of said conveying network between said flexible films, by clamping said bag between said first shell and said second shell; and

a plurality of valves;

wherein a first conduit is provided with a first section which has a first end and a second end which is an opposite end to the first end;

wherein a second conduit is provided with a first section which has a first end and a second end which is an opposite end to the first end, the first section of the first conduit and the first section of the second conduit being opposite;

wherein a third conduit has a first end and a second end which is an opposite end to the first end, which third conduit links said respective first ends of said respective first sections of said first conduit and said second conduit respectively by its first end and its second end;

wherein a fourth conduit has a first end and a second end which is an opposite end to the first end, which fourth conduit links said respective second ends of said respective first sections of said first conduit and said second conduit respectively by its first end and its second end;

wherein a fifth conduit has a first end and a second end which is an opposite end to the first end, said fifth conduit linking both the second end of said first section of said first conduit and said first end of said fourth conduit by its first end, and said fifth conduit linking both said first end of said first section of said second conduit and said second end of said third conduit by its second end;

said first conduit being connected to a chromatography column connector by said first end of its first section, and said second conduit being connected to a chromatography column connector by said second end of its first section; and

wherein a first valve is situated on said first section of said first conduit, a second valve is situated on said first section of said second conduit, a third valve is situated on said third conduit, a fourth valve is situated on said fourth conduit, and a fifth valve is situated on said fifth conduit.

By virtue of the invention, the device for the treatment installation is particularly convenient since it enables the treatment by chromatography to be carried out (by the opening and closing of valves thereby permitting or preventing the flow of liquid in the conduits) simply and with less space occupied.

Furthermore, depending on the treatments carried out, the biological liquid treatment installation comprises, in addition to the device according to the invention, one or more other devices, for example juxtaposed against the device according to the invention.

This or these other device or devices is or are provided with the surrounding treatment components mentioned above formed in particular by one or more pumps, for example of the peristaltic type, and/or by a source container containing the product to treat and/or by a treated liquid collecting container, by a chromatography column, and by an instrumentation platform, these surrounding treatment components each being connected to the bag, directly or not.

According to particularly simple, convenient and economical features of the device according to the invention:

the device comprises a sixth valve situated on said first conduit between said first end of its first section and said chromatography column connector;

the device comprises a seventh valve situated on said second conduit between said second end of its first section and said chromatography column connector;

the bag comprises a sixth conduit between a feed pump connector and a waste container connector, and the device comprises at least an eighth valve situated on said sixth conduit;

the bag comprises a seventh conduit which extends from a bubble trap connector until it enters said sixth conduit, and the device comprises a ninth valve situated on said seventh conduit;

the bag comprises an eighth conduit which extends from a feed pump connector until it enters said seventh conduit, and the device comprises a tenth valve situated on said eighth conduit;

the bag comprises a ninth conduit which extends between a bubble trap connector and an instrumentation connector, and the device comprises at least an eleventh valve situated on said ninth conduit;

the bag comprises at least a tenth conduit which extends from a filter connector until it enters said ninth conduit, and the device comprises at least a twelfth valve situated on said at least a tenth conduit;

the bag comprises an eleventh conduit which extends between a bubble trap connector and an air connector, and the device comprises at least a thirteenth valve situated on said eleventh conduit;

said first end of said first section of said second conduit is connected to at least one fraction container connector, and the device comprises a fourteenth valve situated on said second conduit;

the bag comprises a twelfth conduit which extends from a waste container connector until it enters said second conduit, and the device comprises a fifteenth valve situated on said twelfth conduit; and

the device comprises a pressure sensor situated on said ninth conduit.

BRIEF DESCRIPTION OF THE DRAWINGS

The disclosure of the invention will now be continued with the description of embodiments, given below by way of illus-

trative and non-limiting example, with reference to the accompanying drawings, in which:

FIG. **1** is a perspective view of a device of the installation for treatment of liquid by chromatography;

FIG. **2** is a side view of the device;

FIG. **3** is a view from behind of a first shell of the device, with a back panel removed;

FIGS. **4** and **5** are cross-section views of the device, respectively with an open valve and with a closed valve;

FIG. **6** is a front view of the first shell, on which is mounted a bag for the treatment of liquid by chromatography.

FIG. **7** is a front view of the bag in isolation; and

FIG. **8** is a diagrammatic view of the circuit of an installation for treatment of liquid by chromatography;

DESCRIPTION OF THE PREFERRED EMBODIMENTS

FIGS. **1** and **2** illustrate a device **1** for an installation for biological liquid treatment by chromatography.

The device **1** is of generally parallelepiped form.

This device **1** comprises a base **2** having a first lateral face **3**, a second lateral face **4** which is an opposite face to the first lateral face **3**, a front face **5** meeting the first and second lateral faces **3** and **4**, and a back face **6** which is an opposite face to the front face **5** and which meets the first and second lateral faces **3** and **4**.

The device **1** further comprises a circuit **8** provided with a press **9** and a bag **10**, which comprises a plurality of connectors **11** (**11**A to **11**R in

FIGS. **6** and **7**) for liquid and a network **12** for conveying liquid between these connectors **11** including conduits **13** (**13**A to **13**Q in FIGS. **6** and **7**), as will be seen in more detail later.

The press **9** comprises two shells **16** and **17** each formed from a solid block of rigid material.

Here, the shells **16** and **17** are of polyoxymethylene (POM), also called acetal, and each has a generally parallelepiped form.

The shell **16** is mounted on the front face **5** of the base **2**.

The device **1** further comprises a door **20** hinged to the base **2**.

The shell **17** is mounted in that door **20**.

The device **1** has a closed door position in which the door **20** is closed and covers the shell **16** (FIG. **2**), and another position in which the bag **10** is carried only by the shell **16** (FIG. **1**).

In this other position, the shell **17** is away from the shell **16**.

In the closed door position, the bag **10** is inserted between the two shells **16** and **17**.

The device **1** is provided, at the bottom, with a closed bay **46** intended to receive one or more tanks if necessary.

This bay **46** is closed by a sliding panel **7** disposed on the front face **5** of the device **1**, which panel **7** is adapted to be moved in translation downwardly then towards the back of the device **1** (see the arrows in FIG. **1**) so as to insert and withdraw the tanks.

A control panel **14** is arranged at the top of the front face **5** of the device **1**.

This control panel **14** is provided with a graphical touch interface **15** enabling the biological liquid treatment process to be verified and controlled.

This control panel **14** is thus arranged at a height enabling a user to make use of it.

In order to make it easier to move, the device **1** is in the form of a cart mounted on four castors **18** (of which three can be seen in FIG. **1**), with two castors situated under the front face of the device **5** which comprises a brake **19**, and with the device **1** furthermore having two handles **21** on respective opposite sides of the front face **5**, in the vicinity of the respective lateral faces **3** and **4**.

The device **1** comprises an inclined chassis **25** at its front face **5**.

On each of its left and right sides, the chassis **25** comprises two superposed L-shaped hooking claws **26** emerging from the respective side and extending upwardly.

A support plate **27** is fastened to the right side of the chassis **25**, between the two hooking claws **26**.

This support plate **27** is disposed in the immediate vicinity under the hooking claw **26** situated higher on the right side, so as to leave free access to the hooking claw **26** situated lower down on that same right side.

The support plate **27** comprises two fastening heads **28** on which a platform (not shown) is adapted to be fastened so as to dispose thereon instruments for the treatment of the biological liquid.

These instruments may for example be optional kits such as sensors measuring pH or conductivity and are chosen by the user according to the type of treatment to carry out, as will be seen below for the treatment by chromatography.

The base **2** of the device **1** further comprises devices **29** which, with complementary devices **40** of the door **20**, enable the positioning and the locking of that door **20** in the closed door position.

There are three of the devices **29**, which are situated at the corners of the chassis **25**, respectively at top right, bottom right, and bottom left.

These devices **29** each comprise a body, an annular shoulder (not shown), a head connected to that annular shoulder, that head having the form of a conical tube and being provided internally with a rod **30** with a conical tip. The body comprises a pneumatic chamber, a piston that is mechanically linked to the rod **30** with a conical tip, which rod **30** is adapted to extend within the head.

The door **20** comprises a frame **35** having a generally rectangular outline.

The frame **35** comprises four sides and three complementary devices **40** adapted to cooperate with the devices **29** of the base **2**, which complementary devices **40** are respectively situated at the upper left, bottom left, and bottom right corner.

These complementary devices **40** are provided with a first cylindrical portion and a second cylindrical portion that is hollow and connected to the first portion by a shoulder. This second portion is of smaller diameter than the diameter of the first portion. Furthermore, the second portion is provided with three apertures on the outer surface.

These complementary devices **40** further comprise three balls (not shown) each able to project from the second portion by passing through a respective aperture.

In the closed door position, each second portion of a respective complementary device **40** of the door **20** is inserted into a respective head of a respective device **29** of the base **2**.

The devices **29** and complementary devices **40** form, in pairs, a ball-lock pin system provided with a pneumatic jack of double-acting type with a spring (not shown), having an extended position and a retracted position, the operation of which is well-known.

The rod **30** of the device **29** is adapted to be introduced into the hollow second cylindrical portion when the jack is in its extended position.

In this position of the jack, the rod **30** pushes the balls until each of them passes through an aperture, so blocking movement of door the **20** relative to the base **2**.

The device **1** further comprises a hinge system by virtue of which the door **20** is hinged to the base **2**.

This hinge system is provided with a single hinge **42** comprising a first hinge portion **43** fastened to the top right corner of the frame **35** of the door **20**, and a second hinge portion (not shown) fastened to the lateral face **3** of the base **2** of the device **1**.

On the upper part of the second hinge portion a mechanical spring (not shown) is arranged with a plastic stop to facilitate the opening and closing of the door **20**.

The device also includes a position sensor (not shown) to verify and provide security for the opening and closing of the door **20**, by detecting the closed door position and the other position.

A pneumatic system (not shown) is also arranged on the upper part of the second hinge portion so as to supply a system (not shown) for locking the shell **17** and which is situated in the door **20**

In the closed door position, the rotational axis about which the first hinge portion **43** of the door **20** pivots is offset relative to a parting surface formed between the shells **16** and **17** when they clamp the bag **10** between them.

This axial offset towards the front of the device **1** enables lateral clearances to be formed between the door **20** and the base **2** at the outer perimeter of the door **20** (FIG. **2**).

Thus, the access to the connectors **11** of the bag **10** is greatly facilitated.

Shell **17** has a reference surface **80**, which is flat here, and a plurality of shaping channels **81** recessed into that reference surface **80**. This shell **17** has a first side **82** and a second side **83** that is an opposite side to the first side **82**, a third side **84** and a fourth side **85** that is an opposite side to the third side **84**, these third and fourth sides **84** and **85** each meeting the first and second sides **82** and **83**.

On its fourth side **85**, the shell **17** is provided with two positioning holes **86** for positioning the bag **10**, which are arranged facing positioning apertures **73** of the bag **10** in the closed door position, with bag **10** clamped between the shells **16** and **17**.

Furthermore, the shell **17** is provided with two other positioning holes **87** for positioning the door **20** in the closed door position, one of which is situated at the first side **82** of the shell **17**, and the other at the other extreme, towards the bottom of the shell **17**.

These two positioning holes **87** are arranged so as to face positioning apertures **77** of the bag **10** in the closed door position, with the bag **10** clamped between the shells **16** and **17**.

In a central zone, the shell **17** further comprises four locking holes **88** of greater diameter than that of the positioning holes **86** and **87** of that shell **17**, which locking holes **88** serve for the locking together of the shells **16** and **17**.

These four locking holes **88** are situated at the locations where there are the most channels **81** serving for the formation of the conduits **13**, since it is at these locations that the force of pressure is greatest during the treatment. The locking holes **88** are thus at least partially surrounded by channels **81**.

These four locking holes **88** are arranged so as to face locking apertures **75** of the bag **10** in the closed door position, with the bag **10** clamped between the shells **16** and **17**.

The shell **16** has a flat reference surface **95** and shaping channels **96** recessed relative to the reference surface **95** (FIG. **4**), each facing a corresponding shaping channel **81**.

Generally, the surfaces **80** and **95** have similar dimensions and the arrangement of the shaping channels **96** is the mirror image of the set of the shaping channels **81**.

The shaping channels **81** and **96** are of semi-elliptical cross-section.

The surfaces **80** and **95** may be applied against each other with the channels **81** and **96** in register with each other to delimit a network of cavities which are each generally tubular.

The shell **16** has a first side **145** and a second side **146** that is an opposite side to the first side **145**, a third side **147** and a fourth side **148** that is an opposite side to the third side **147**, which third and fourth sides **147** and **148** each meet the first and second sides **145** and **146** (FIG. **6**).

The shell **16** furthermore has, on the opposite lateral walls **98** and **99**, dowels **100** adapted to be engaged, by virtue of a vertical translational movement from top to bottom when the shell **16** is against the chassis **25**, in the hooking claws **26** disposed on that chassis **25**.

Furthermore, on those same opposite lateral walls **98** and **99**, the shell **16** has rods **101** for manipulating the shell **16**.

This manipulation is carried out by the user of the device **1**, or with the help of a winch, which may for example be electric.

Thanks to the inclination and the weight of the shell **16**, and thanks to the engagement of the dowels **100** in the hooking claws **26**, the shell **16** is securely fastened to the chassis **25**.

On its flat reference surface **95**, the shell **16** furthermore has a re-entrant portion **102** which is extended downwardly by a slanting surface **103**, the slant of which is directed inwardly of the device **1**.

This slanting surface **103** enables the provision of access to the bay **46** comprising the containers.

On a lower face **97**, the shell **16** further comprises a channel **104** of inverted gutter shape emerging on the slanting surface **103** (FIG. **1**).

This channel **104** serves as a fool-proof device on installation of the shell **16** on the chassis **25** of the base **2**, in order for the reference surface **95** to be turned outwardly.

Shell **16** further comprises, on its fourth side **148**, two aligned hooking studs **106** that are evenly spaced apart.

These studs **106** are adapted pass through the positioning apertures **73** of the bag **10** for the suspension of the latter on the shell **16**.

Furthermore, the distal end of these same hooking studs **106** is adapted to be inserted into the positioning holes **86** of the shell **17** in the closed door position.

The shell **16** comprises two positioning dowels **107** for positioning the door **20**, one of which is situated on the fourth side **148** of the shell **16** close to a hooking stud **106** situated at the top left of that shell **16**, the other positioning dowel **107** being situated at the other extreme, that is to say at the bottom of the shell **16**, between two shaping channels **96** at the location of the third side **147**.

These positioning dowels **107** are adapted to pass through the apertures **77** of the bag **10**, and the distal end of these positioning dowels **107** is adapted to be inserted into the positioning holes **87** of the shell **17**.

The shell **16** further comprises four locking holes **108** which are situated at the locations where there are the most channels **96** serving for the formation of the conduits **13**, since it is at these locations that the force of pressure is greatest during the treatment. The locking holes **108** are thus at least partially surrounded by channels **96**.

These locking holes **108** are arranged so as to face the locking through-apertures **75** of the bag **10** when it is disposed on the shell **16**, and also to face the corresponding locking holes **88** of the shell **17** in the closed door position.

The locking holes **108** of the shell **16** are passed through by the ball-lock pins **110** for the locking together of the shells **16**

and **17** when the door **20** is in its closed position, and for the clamping of the bag **10** in the circuit **8**.

Each ball-lock pin **110** comprises a body connected to the shell **16**, and an annular shoulder provided with a transverse face and connected to a head (which are not shown). The body comprises a pneumatic chamber and a piston, the piston being mechanically connected to a rod with a conical tip (not shown). This rod extends in the head of the pin **110** and three balls **119** (FIG. **6**) are arranged so as to be able to project from the head by passing through apertures formed in that head. The pin **110** is similar to a double-acting type jack and has an extended position and a retracted position.

The head of each pin **110** passes through the corresponding locking hole of the shell **16**, this head also passes through the corresponding locking aperture **75** of the bag, and this head lastly emerges into a corresponding locking hole **88** of the shell **17** in the closed door position.

When a first portion of the pneumatic chamber of the pin **110** is placed under pressure, the piston is acted upon. When the piston is at end of travel, the balls **119** are in extended position, that is to say that they project from the head to extend into the locking hole **88** of the shell **17**.

The locking holes **88** are configured such that, when the balls **119** are extended, the shells **16** and **17** are securely locked.

When a second portion of the pneumatic chamber of the pin **110** is placed under pressure, this second portion being opposed to the first portion, the piston is urged towards the other end of travel position. When that position is reached, the balls **119** are in retracted position, that is to say they go back into the head.

In addition to the shells **16** and **17**, the device **1** comprises, here installed on the back of the shell **16** instruments required for the treatment of the biological liquid illustrated in FIG. **3**.

There are illustrated pinch valves **125**A to **125**W (FIG. **3**) comprising actuators **221** (FIGS. **4** and **5**) to pinch a corresponding conduit **13** so as to prevent or allow the passage of liquid in that conduit **13**, and a pressure sensor **126**.

Also illustrated are a pneumatic distributor **128** and means for verification and control to perform various treatments of that liquid, which means are formed for example by a verification and command unit **127**.

In the example illustrated in FIGS. **4** and **5**, the actuators **221** each comprise a body **223** fastened to the shell **16** and a moveable pinching finger **224** having a retracted position when the valve **125** is in open position and an extended position when the valve **125** is in closed position.

The body **223** comprises a pneumatic chamber **226**, a piston **227** and an accommodation **228** provided with a spring **229** accommodated in the shell, with the spring **229** surrounding a rod linking the piston **227** and the finger **224**.

The pneumatic chamber **226**, when it is under pressure, biases the piston **227** against the spring **229**. When the piston **227** is at the end of its stroke, the finger **224** is in retracted position (FIG. **4**).

When the pneumatic chamber **226** is at atmospheric pressure, the spring **229** biases the piston **227** towards the other position of end of stroke. When the latter is reached, the moveable finger **224** is in extended position (FIG. **5**).

At its distal end, the moveable finger **224** is shaped like the profile of the shaping channel **81** of the shell **17**.

In the extended position, the moveable finger **224** projects into one of the channels **81**.

The valve **125** further comprises, in register with the moveable finger **224**, an elastically compressible pad **231**, which pad **231** forms part of an individual local plate **230** of silicone molded in one piece (see also FIG. **1**).

This pad **231** has a first face **232** nearest the moveable finger **224** and a second face **233** nearest the conduit to pinch **13**.

The second face **233** of the pad **231** is concave and locally delimits the shaping channel **96** of the shell **16**.

Each actuator **221** enables a conduit **13** to be pinched between its moveable finger **224** and shell **17**, to allow or prevent the passage of the liquid at that location.

To pinch the conduit **13**, the valve **125** passes from its open position (FIG. **4**) in which the moveable finger **224** is in a retracted position in which it does not pinch the conduit **13**, to its closed position (FIG. **5**) in which the moveable finger **224** is in an extended position in which it pinches the conduit **13**.

The finger **224**, at the time it is extended, pushes the pad **231** towards the shaping channel **81** of the shell **17**.

Thus, the pad **231** passes from a resting configuration in which its second face **233** is concave and locally delimits the shaping channel **96** of the shell **16** of the conduit **13** to pinch, to a pinching configuration in which its second face **233** is convex, with the conduit **13** and the pad **231** sandwiched between the shaping channel **81** of the shell **17** of the conduit **13** to pinch and the moveable pinching finger **224**.

Furthermore, the sensor **126** is fastened to the shell **16** in register with a channel **96**, with the distal end of the sensor **126** emerging into that channel **96**, without actually having to touch the fluid (not shown).

Such a pressure sensor measures the pressure via the outer surface of the bag **10**.

The shell **16** further comprises, here installed behind that shell **16**, a female connector **130** enabling power to be supplied to the valves **125**A-**125**W, the sensor **126** the distributor **128** and the verification and control unit **127**, which are integrated into that shell **16** (FIG. **3**).

The supply is thus electrical (for power and control) and pneumatic.

This female connector **130** is situated at the bottom right of the shell **16** (viewed from behind).

When the rear part of the shell **16** is covered by a back panel, only the access to the female connector **130** is possible.

A male connector (not shown) arranged on the base **2** of the device **1** can be connected to the female connector **130** of the circuit **8**.

The bag **10** comprises two flexible films **65** and **66** connected to each other by a seal delimiting a closed contour (FIGS. **4** and **7**), and the connectors **11** of the conveying network **12**.

Thus, each of the films **65** and **66** is a PureFlex™ film from the applicant.

This is a co-extruded film comprising four layers, respectively, from the inside to the outside, a layer of ultra low density polyethylene (ULDPE) forming the material for contact with a liquid, a copolymer of ethylene and vinyl alcohol (EVOH) forming a barrier to gases, a copolymer layer of ethylene and vinyl acetate (EVA) and a layer of ultra low density polyethylene (ULDPE) forming the outer layers.

The seal is a weld bead formed at the periphery of the films **65** and **66** at the location of the conduits **13**.

The conduits **13** (**13**A to **13**Q in FIGS. **6** and **7**) are formed on the passage of a liquid.

The closed contour of the bag **10** forms a liquid treatment zone, in which extend the conduits **13**.

The closed contour has a first side **68**, a second side **69** that is an opposite side to the first **68**, a third side **70** meeting the first and second sides **68** and **69** and a fourth side **71** that is an opposite side to the third side **70** and that meets the first and second sides **68** and **69**. The connectors **11**A to **11**P of the

conveying network **12** emerge inside and outside the first, second, and third sides **68**, **69**, and **70**, as can be seen more particularly in FIG. **7**.

The dimensions of the bag **10** correspond to those of the surfaces of the shells **16** and **17**.

The bag **10** is provided to be clamped between by the shells **16** and **17** with one of the faces of the bag **10** in contact with the face of the shell **16**, and with the other face of the bag **10** being in contact with the face of the shell **17**.

At its fourth side **71**, the bag **10** further comprises the two through apertures **73** for positioning which were referred to above.

These positioning apertures **73** are aligned and evenly spaced apart and serve for the positioning of the bag **10** on the shell **16**.

The bag **10** further comprises, in its treatment zone **67**, the four through apertures **75** referred to above for locking the shells **16** and **17** together, these locking apertures **75** having a greater diameter than the positioning apertures **73**.

These locking apertures **75** are situated in the treatment zone at the locations where there are the most conduits **13**, since it is at these locations where the force of pressure is greatest during the treatment. The locking apertures **75** are thus at least partially surrounded by conduits **13**.

The bag **10** further comprises two other positioning apertures **77** referred to above which serve for the positioning of the door **20** in the closed door position of the device.

One of the positioning apertures **77** is situated at the fourth side **71** of the bag **10** in the vicinity of the positioning aperture **73** situated at the top left of the bag **10**, and the other positioning aperture **77** is situated at the opposite extreme, that is to say towards the bottom of the bag **10**, in the treatment zone.

A more detailed description will now be given of the conduits **13**A to **13**B and the connectors **11**A to **11**R of the bag **10**, as well as the valves **125**A to **125**W and the sensor **126** which are integrated into the shell **16** and the components of the surroundings which cooperate with the conduits **13**A to **13**Q and its connectors **11**A to **11**R, with reference to FIGS. **6** and **7**.

The treatment components of the surroundings are formed by the peristaltic type pumps, by various containers and by other measuring instruments, as will be seen below.

These treatment components of the surroundings are here diagrammatically represented and connected to the bag **10** mounted on the shell **16** (FIG. **6**), or only to the bag **10** (FIG. **7**), but in reality, these components are disposed on one or more other devices, for example placed against the device **1**.

These other devices are advantageously carts like the device **1**.

Of course, the connections which will be described below may be formed before fastening the bag **10** by suspension onto the shell **16**, without being hindered subsequently, that is to say at the time of suspending that bag **10** on the shell **16**, by the hinge system, or after the suspension of that bag **10**.

On its first side **68**, the bag **10** comprises a connector **11**A linked to a conduit **13**A which extends almost horizontally (with a slight slope of approximately 2 to 3 degrees) as a first section starting from the connector **11**A until a bent section is reached, which extends vertically to the third side **70** of the bag **10**, where that conduit **13**A is connected to a connector **11**B.

The connector **11**A is connected to a feed pump **414** and the connector **11**B is connected to a waste container **400**.

A flow meter **404** is interposed between the feed pump and the connector **11**A.

This feed pump **414** may be connected to a source container **417** (with a product detector **415** interposed between that source container **417** and that feed pump **414**), a container for rinsing liquid **418**, a container for cleaning liquid **419**, a container for buffer liquid **420** and a container for elution product **421**.

On its first side **68**, above the connector **11**A, the bag **10** further comprises a connector **11**D linked to a conduit **13**D which extends starting from that connector **11**D as a first horizontal section, then as a second section forming a first branch of a Y, then over a third section forming a second branch of that Y, until it enters the conduit **13**A.

The connector **11**D is connected to a bubble trap **402**.

The bag **10** further comprises, on its first side **68**, between the connector **11**D and the connector **11**A, a connector **11**C linked to a conduit **13**C which extends from the connector **11**C until it enters the third section of the conduit **13**D.

The connector **11**C is connected to a feed pump **413**.

A flow meter **403** is interposed between the feed pump **413** and the connector **11**C

This feed pump **413** is itself connectable to five containers each holding a buffer **422** to **426**.

The bag **10** also comprises on its first side **68**, above the connector **11**D, a connector **11**E linked to a conduit **13**E which extends from that connector **11**E to the connector **11**H situated on the second side **69** of the bag **10**.

The connector **11**E is connected to the bubble trap **402** and the connector **11**H is connected to an instrumentation platform **405**, which comprises a conductivity sensor, a temperature sensor, a bubble detector and a pH sensor.

The bag **10** comprises a conduit **13**G which extends from a junction situated between the second section and the third section of the conduit **13**D until it enters conduit **13**E such that this conduit **13**G forms the third branch of the Y.

This conduit **13**G enables the bubble trap **402** to be avoided.

The bag **10** also comprises, on its first side **68**, above the connector **11**E, two other connectors **11**G and **11**F both connected to a U-shaped conduit **13**F.

The connector **11**G is connected to the bubble trap **402** and the connector **11**F is open to the atmosphere (a pipe with a free end is connected thereto).

On its third side **70**, the bag **10** comprises a connector **11**I linked to a conduit **13**H which extends from that connector **11**I until it enters the conduit **13**E at a junction.

This connector **11**I is connected to a filter **401** for the liquid to treat.

On that same side **70**, the bag **10** further comprises a connector **11**J connected to a conduit **13**I which extends from that connector **11**J until it enters the conduit **13**E at another junction.

This connector **11**J is also connected to the filter **401** for the treatment of the liquid.

The bag **10** comprises, on its second side **69**, above the connector **11**H, a connector **11**K connected to another conduit **13**J which extends from that connector **11**K to another connector **11**L situated on that same side **69** of the bag **10**, at its upper end (at the top right hand corner of the bag **10**).

The connector **11**K is connected to the instrumentation platform **405** and the connector **11**L is connected to a chromatography column **406**.

Above this connector **11**K is located a connector **11**M connected to a conduit **13**K which extends from that connector **11**M to another connector **11**N situated on the same side **69** of the bag **10**, just below the connector **11**L.

The connector **11**M is connected to the chromatography column **406** and the connector **11**N is connected to a collecting container **407**, referred to as fraction **1**.

On that same side **69**, above the connector **11**M, the bag **10** further comprises a connector **11**R linked to a conduit **13**B which extends from that connector **11**R as a first horizontal section then upwardly as a second vertical section until it enters conduit **13**K.

That connector **11**R is connected to a waste container **412**.

Still on that same side **69**, between the connectors **11**N and **11**R, the bag **10** further comprises three connectors **11**O, **11**P and **11**Q respectively linked to conduits **13**O, **13**P and **13**Q which each extends from the respective connector **11**O, **11**P and **11**Q until it enters into conduit **13**B.

The connectors **11**O, **11**P and **11**Q are respectively connected to collecting containers **408** (for fraction **2**), **410** (for fraction **3**), and **411** (for fraction **4**).

A filter **409** is interposed between the connector **11**O and the collecting container **408** for fraction **2**, since it is generally in that container **408** that the desired treated liquid is conveyed.

Conduit **13**J extends from connector **11**K as an almost horizontal first section (with a slight positive slope between side **69** and side **68**), then as a second section **13J1** oriented almost diagonally relative to the bag **10**, then as a third section extending vertically upwardly towards the top of the bag **10** and lastly as a fourth section going back towards the second side **69** of the bag **10** with an orientation that is substantially horizontal (with a slight positive slope between side **68** and side **69**).

As for conduit **13**K, this extends from connector **11**M as a very short horizontally oriented first section then as a second section **13K1** oriented substantially parallel to the second section **13J1** of conduit **13**J, then after a bent section, conduit **13**K continues as a third section directed towards the second side **69** of the bag with a positive slope between the first side **68** and the second side **69**, and lastly this conduit **13**K continues as a substantially horizontal fourth section until it reaches connector **11**N.

Three other conduits **13**L, **13**M and **13**N detailed below are arranged on the respective second sections **13J1** and **13K1** of the conduits **13**J and **13**K.

Conduit **13**L, perpendicularly oriented relative to the sections **13J1** and **13K1**, has a first end **13L1** and a second end **13L2** which is an opposite end to the first end **13L1**, with the first end **13L1** of that conduit **13**L meeting a first end **13J2** of section **13J1** of conduit **13**J, and with the second end **13L2** of conduit **13**L meeting a first end **13K2** of section **13K1** of conduit **13**K.

Conduit **13**M, perpendicularly oriented relative to the two sections **13J1** and **13K1**, has a first end **13M1** and a second end **13M2** which is an opposite end to the first end **13M1**, with the first end **13M1** of conduit **13**M meeting a second end **13J2** which is an opposite end to the first end **13J2** of section **13J1** of conduit **13**J, and the second end **13M2** of conduit **13**M meeting a second end **13K3** which is an opposite end to the first end **13K2** of section **13K1** of conduit **13**K.

Conduit **13**N, vertically oriented relative to the bag **10**, has a first end **13N1** and a second end **13N2** which is an opposite end to the first end **13N1**, with the first end **13N1** meeting a second end **13J3** of section **13J1** of conduit **13**J and the first end **13M1** of conduit **13**M, and the second end **13N2** of conduit **13**N meeting the first end **13K2** of section **13K1** of conduit **13**K and the second end **13L2** of conduit **13**L

Shell **16** comprises a valve **125**A and an elastic buffer **231**A on the first section of conduit **13**A, as well as a valve **125**B and an elastic buffer **231**B on the second (vertical) section of conduit **13**A, the intersection between conduit **13**A and conduit **13**D being located between those two valves **125**A and **125**B.

Shell **16** further comprises a valve **125**C and an elastic buffer **231**C at the location of conduit **13**C.

Shell **16** also comprises a valve **125**D and an elastic buffer **231**D on conduit **13**D, at the location of the first branch of the Y.

Shell **16** comprises a valve **125**G and an elastic buffer **231**G on conduit **13**G, at the location of the second branch of the Y.

On conduit **13**E, shell **16** also comprises a valve **125**E and an elastic buffer **231**E arranged before the intersection between conduit **13**G and conduit **13**E, as well as a valve **125**H and an elastic buffer **231**H arranged just after the intersection between conduit **13**G and conduit **13**E, and a valve **125**I and an elastic buffer **231**I arranged just after the intersection between conduit **13**H and conduit **13**E and just before the intersection between conduit **13**I and conduit **13**E.

Shell **16** also comprises a pressure sensor **126** on that conduit **13**E, just after the intersection between that conduit **13**E and conduit **13**I.

On conduit **13**H the shell **16** comprises a valve **125**J and an elastic buffer **231**J.

Shell **16** also comprises a valve **125**K and an elastic buffer **231**K on conduit **13**G.

Shell **16** further comprises a valve **125**F and an elastic buffer **231**F on conduit **13**F.

On its second side **146**, shell **16** comprises a valve **125**W and an elastic buffer **231**W on conduit **13**K, close to connector **11**N.

Shell **16** also comprises a valve **125**S and an elastic buffer **231**S on conduit **13**O.

The shell comprises a valve **125**T and an elastic buffer **231**T on conduit **13**P.

Shell **16** comprises a valve **125**U and an elastic buffer **231**U on conduit **13**Q.

Shell **16** also comprises a valve **125**V and an elastic buffer **231**V on conduit **13**B, close to connector **11**R.

Shell **16** further comprises, substantially at it center, a valve **125**L and an elastic buffer **231**L on section **13J1** of conduit **13**J, between its two ends **13J2** and **13J3**, and a valve **125**M and an elastic buffer **231**M on that same conduit **13**J just after end **13J2** of section **13J1**.

On conduit **13**K, shell **16** also comprises a valve **125**N and an elastic buffer **231**N on its section **13K1**, between its two ends **13K2** and **13K3**, and a valve **125**O and an elastic buffer **231**O arranged between end **13K3** and connector **11**M.

Shell **16** further comprises a valve **125**P and an elastic buffer **231**P on conduit **13**L.

Shell **16** also comprises a valve **125**R and an elastic buffer **231**R on conduit **13**M.

Lastly, shell **16** comprises a valve **125**Q and an elastic buffer **231**Q on conduit **13**N.

Each connector **11**A to **11**R has a semi-elliptical cross-section and is provided with a longitudinal conduit **90** on which are formed two annular walls **91** and **92** defining between them an annular channel **93**, the annular wall **91** being juxtaposed against the films **65** and **66** of the bag **10** and the annular wall **92** being offset relative to those films **65** and **66** towards the end of the conduit **90** at which a pipe is connected for its connection to a component in the vicinity.

Each connector **11**A to **11**R is furthermore provided with a collar **94** mounted around the channel **93** for the sealing of the corresponding connector relative to the films **65** and **66** of the bag **10**.

A description will now be made in more detail of the circuit for treating liquid by chromatography, with reference to FIG. **8**, with the components in the vicinity.

FIG. **8** diagrammatically shows the circuit **8** provided by press **9** and bag **10**. In this circuit the valves **125**A to **125**W are

respectively formed by an actuator **221**, and by the portion of the shell **17** against which the conduit **13** presses when it is pinched by the finger **224**.

The liquid to be treated is initially in a source bag **417** filled with liquid from the bioreactor or from the previous treatment. This source bag **417** is connectable via a male connector **517** to conduit **13**A. For this, male connector **517** is connected to a female connector **617**, which is linked to the feed pump **414**. Between that female connector **617** and that pump **414** is situated a product detector **415** as well as a valve **717**. At the outlet of the pump **414** a flow meter **404** is also situated.

The respective containers for rinsing liquid **418**, for cleaning liquid **419**, for buffer liquid **420** and for elution separator product **421** can be linked to that conduit **13**A via a male connector respectively **518**, **519**, **520**, **521**. These respective male connectors are connectable to corresponding female connectors **618**, **619**, **620** and **621**, which are linked to the feed pump **414** via respective valves **718**, **719**, **720** and **721**.

The sections formed between the various containers and that feed pump are formed by disposable flexible conduits.

The feed pump **414** (here a peristaltic pump) as well as the respective valves **717** to **721** enable the liquid to be made to flow to conduit **13**A.

The term "conduit" must be understood in the present document as being a portion of tubing connecting two elements of the circuit, it being possible for this portion equally well to comprise a unique tube or on the contrary several tubes, possibly having different diameters, connected in series by a simple connector (not playing any other role here) or sophisticated connector (for example a disposable connector for a pressure sensor (or for a sensor of another physico-chemical value)).

The valve **125**A is implanted on the conduit **13**A near the connector **11**A in order to allow or prevent the flow of liquid in the conduit.

Other buffer products are present in the respective containers **422** to **426**, which are respectively connectable via a male connector **522** to **526** to conduit **13**C.

For this the respective male connectors **522** to **526** are connected to respective female connectors **622** to **626**, which are connectable to the feed pump **413** via respective valves **722** to **726**.

A flow meter **403** is interposed between the feed pump **413** and the conduit **13**C.

The valve **125**C is implanted on the conduit **13**C near the connector **11**C in order to allow or prevent the flow of liquid in the conduit.

The liquid to treat is generally a mixture of the product coming from the source bag with buffer products, and this mixture is produced by virtue of the feed pumps **413** and **414**, as well as by virtue of the valves **125**C to **125**A.

The product detector **415** makes it possible to detect whether liquid is passing in conduit **13**A and, the case arising, whether the liquid conveyed is sent directly, by virtue of the opening of valve **125**A and the opening of valve **125**B, to a waste container **400**. For this, the waste container **400** is connected via a male connector **500** to the female connector **11**B.

The bubble trap **402** can be linked to conduit **13**E via male connectors **502** and **602** that are connectable to the female connectors **11**D and **11**E.

The valves **125**D and **125**E enable that bubble trap **402** to be supplied or not.

The bubble trap **402** further comprises an additional valve **702**.

The filter **401** can be linked to conduit **13**E via male connectors **501** and **601** that are respectively connectable to the female connectors **11**I and **11**J.

The valves **125**J and **125**K enable the liquid to be allowed or prevented from passing through that filter **401**.

The valves **125**G, **125** and **125**I enable the bubble trap **402** and the filter **401** to be avoided, with the valves **125**D, **125**E, **125**J and **125**K being shut.

The pressure sensor **126** is implanted on conduit **13**E.

The chromatography column **406** is connectable to conduit **13**J and to conduit **13**K via male connectors **506** and **606**, which are connectable to respective female connectors **11**L and **11**M.

Valves **125**L, **125**M, **125**P, **125**N, **125**R and **125**O enable the flow of liquid to be created in the chromatography column **406**.

Valve **125**Q enables the chromatography column **406** to be avoided.

The device **1** comprises an instrumentation platform **430** comprising in particular a conductivity sensor, a temperature sensor, a pH sensor and a UV sensor, this platform being disposed ahead of the collecting containers **407**, **408**, **410** and **411**.

These collecting containers **407**, **408**, **410** and **411**, as well as the waste container **412**, are connectable to conduit **13**K respectively via a female connector **507**, **508**, **510**, **511** and **512**, which are connectable to the male connector **11**N, **11**O, **11**P, **11**Q and **11**R.

Valves **125**W, **125**S, **125**T, **125**U and **125**V enable the flow of liquid to the respective collecting containers and to the waste container **412** to be allowed or prevented.

A filter **409** is interposed between the female connector **508** and the collecting container **408**, in which the fraction **2** of the treated liquid, which is desired, is retrieved.

The operation of this circuit will now be described.

Valves **717**, **125**C, **125**G, **125**H, **125**I, **125**Q and **125**V are opened to enable the flow of the source product in the circuit, the other valves being closed.

In this case, the liquid flows in conduit **13**C, then **13**G, then **13**E, then **13**J, until it reaches the junction between conduit **13**N and **13**J, then passes via conduit **13**N until it reaches the junction between that conduit **13**N and conduit **13**K, then passes via conduit **13**K until conduit **13**B is reached, where the product is collected in the waste container **412**.

Next, the container **420** for buffer liquid is connected, which buffer liquid passes into the bubble trap **402**, into the filter **401**, then into the chromatography column **406** until it is collected in the waste container **412**.

For this, the valves **720**, **125**C, **125**D, **702**, **125**E, **125**H, **125**J, **125**K, **125**L, **125**M, **125**O, **125**N and **125**V are opened, the other valves being closed.

The buffer liquid then passes into conduits **13**A, **13**D, **13**E, and **13**J (including section **13J1**), until the chromatography column **406** is reached (passing via the instrumentation platform **405**). The buffer liquid exits from that column **406** and flows into conduit **13**K (including section **13K1**) until it reaches conduit **13**B to be collected in waste container **412**.

The treatment cycle for the source product coming from container **417** is proceeded with next, which product passes into filter **401** then into the chromatography column **406**, and is collected in the waste container **412**.

For this, the valves **717**, **125**C, **125**G, **125**H, **125**J, **125**K, **125**L, **125**M, **125**O, **125**N and **125**V are opened, the other valves being closed.

Thus, the source liquid passes within conduits **800**, **13**C, **13**D, **13**E, **13**H, **13**I and **13**J (by section **13J1**) until it enters the chromatography column **406**. The liquid exits from that

column **406** by conduit **13**K (and section **13**K**1**) then passes to waste container **412** by conduit **13**B.

Once the source liquid has been loaded into the chromatography column **406**, a cleaning cycle is proceeded with, the container containing the cleaning liquid **419** being connected, which liquid passes through the bubble trap **402**, the filter **401**, the instrumentation platform **405** and the chromatography column **406** until it is collected in the waste container **412**.

For this, the valves **719**, **125**C, **125**D, **125**E, **125**H, **125**J, **125**K, **125**L, **125**M, **125**N, **125**O and **125**V are opened, the other valves being closed.

Thus, the cleaning liquid passes within conduits **13**C, **13**D, **13**E, **13**H, **13**I and **13**J (including section **13**J**1**) until it enters the chromatography column **406**. The cleaning liquid exits from that column **406** and passes via conduit **13**K (including section **13**K**1**) until it reaches waste container **412** by conduit **13**B.

An elution cycle (first elution step) is next proceeded with in which the elution separator product present in container **421** passes through the bubble trap **402**, the filter **401** and the chromatography column **406** until it is collected in the container **407** for fraction **1**.

For this, the container **421** containing the elution separator product is connected, and the valves **721**, **125**C, **125**D, **125**E, **125**H, **125**J, **125**K, **125**L, **125**M, **125**O, **125**N and **125**W are opened, the other valves being closed.

Thus, the elution separator product passes within conduits **13**C, **13**D, **13**E, **13**H, **13**I and **13**J (including section **13**J**1**) until it reaches the chromatography column **406**.

The liquid leaves this column **406** and passes via conduit **13**K until it reaches the container **407** for fraction **1**.

Next, the elution (second step) is continued in which a mixture of elution separator product coming from container **421** and of at least one buffer product from containers **422** to **426** passes towards the bag **10**.

For this, the containers concerned are connected and the mixture is made by virtue of pumps **413** and **414**.

Valves **721**, **722** and/or **723** and/or **724** and/or **725** and/or **726**, and valves **125**C and **125**, valves **125**D, **125**E, **125**H, **125**J, **125**K, **125**L, **125**M, **125**O, **125**N et **125**S are opened, the other valves being closed.

Thus the mixture obtained passes through the bubble trap **402**, the filter **401**, the instrumentation platform **405** then the chromatography column **406** until it is collected in the container **408** for fraction **2**. The treated liquid also passes into filter **409**.

The liquid coming from feed pump **413** passes via conduit **13**C and the liquid or liquids from feed pump **414** pass(es) within conduit **13**A until the liquids meet in conduit **13**D where the mixture thus occurs. The mixture continues to pass in conduit **13**E then in conduit **13**J (including section **13**J**1**) then in the chromatography column **406**, from which it exits and passes through conduit **13**K (including section **13**K**1**) until reaching container **408** for fraction **2** via conduit **130**.

Other steps may be carried out with regard to this fraction **2** of collected product, such as an adjustment of pH.

Lastly, in a regenerating cycle of the chromatography column **406**, a particular buffer product from one of the containers **422** to **426** passes into the bubble trap **402**, into the filter **401**, and into the chromatography column **406**, from the bottom, until it is collected in the waste container **412**.

For this, one of the containers **422** to **426** is connected and one of the valves **722** to **726** as well as the valves **125**A, **125**C, **125**D, **125**E, **125**H, **125**J, **125**K, **125**R, **125**O, **125**M, **125**D, **125**P and **125**V are opened, the other valves being closed.

This regeneration liquid thus passes into conduit **13**A, then into conduit **13**D, then into conduit **13**E, then into conduit **13**J, then into conduit **13**M (the liquid does not pass into conduit **13**J**1**), then into conduit **13**K until the chromatography column **406** is reached (the liquid does not pass into the chromatography column from the top) at connector **11**M, then passes into conduit **13**J until reaching the end **13**J**2** of section **13**J**1**, then passes into conduit **13**L, then into conduit **13**K (the liquid not passing into sections **13**J**1** and **13**K**1**) until reaching the waste container **412** via conduit **13**B.

For each step described above, it is possible to avoid the bubble trap **402** by closing valve **125**G and by opening valves **125**D, **125**E and **125**F so as to make the liquid pass via conduit **13**G.

Furthermore, it is also possible to avoid filter **401** by closing valve **125**I and by closing valves **125**J and **125**K (the liquid does not flow into conduits **13**H and **13**I).

In a variant not illustrated, the pumps are of diaphragm type rather than peristaltic.

In a variant not illustrated, the instrumentation platform **405** is integrated into the shell **16**. The connectors **11**H and **11**K are thus absent, and conduits **13**E and **13**J meet directly.

In a variant not illustrated, the dimensions of the bag **10** do not match those of the surfaces of the shells **16** and **17**, being larger or smaller.

In another variant not illustrated, the installation does not comprise a chromatography column but rather an ion exchange column or an adsorbent membrane.

It should be noted more generally that the invention is not limited to the examples described and represented.

The invention claimed is:

1. A bag for a circuit of an installation for treatment of a biological liquid by chromatography, comprising:

a plurality of connectors (**11**A-**11**R) and a network (**12**) for conveying liquid between said connectors (**11**A-**11**R), said conveying network (**12**) being formed by a plurality of conduits (**13**A-**13**Q); and

two flexible films (**65**, **66**) fastened to each other, said conduits (**13**A-**13**Q) being formed between the two said flexible films (**65**, **66**);

wherein a first conduit (**13**J) is provided with a first section (**13**J**1**), which has a first end (**13**J**2**) and a second end (**13**J**3**) which is an opposite end to the first end (**13**J**1**);

wherein a second conduit (**13**K) is provided with a first section (**13**K**1**), which has a first end (**13**K**2**) and a second end (**13**K**3**) which is an opposite end to the first end (**13**K**2**), the first section (**13**J**1**) of the first conduit (**13**J) and the first section (**13**K**1**) of the second conduit (**13**K) being opposite;

wherein a third conduit (**13**L) has a first end (**13**L**1**) and a second end (**13**L**2**) which is an opposite end to the first end (**13**L**1**), which third conduit (**13**L) links said respective first ends (**13**J**2**, **13**K**2**) of said respective first sections (**13**J**1**, **13**K**1**) of said first conduit (**13**J) and said second conduit (**13**K) respectively by its first end (**13**L**1**) and its second end (**13**L**2**);

wherein a fourth conduit (**13**M) has a first end (**13**M**1**) and a second end (**13**M**2**) which is an opposite end to the first end (**13**M**1**), which fourth conduit (**13**M) links said respective second ends (**13**J**3**, **13**K**3**) of said respective first sections (**13**J**1**, **13**K**1**) of said first conduit (**13**J) and said second conduit (**13**K) respectively by its first end (**13**M**1**) and its second end (**13**M**2**);

wherein a fifth conduit (**13**N) has a first end (**13**N**1**) and a second end (**13**N**2**) which is an opposite end to the first end (**13**N**1**), said fifth conduit (**13**N) linking both the second end (**13**J**3**) of said first section (**13**J**1**) of said first

conduit (13J) and said first end (13M1) of said fourth conduit (13M) by its first end (13N1), and said fifth conduit (13N) linking both said first end (13K2) of said first section (13K1) of said second conduit (13K) and said second end (13L2) of said third conduit (13L) by its second end (13N2); and

said first conduit (13J) being connected to a chromatography column connector (11L) by said first end (13J2) of its first section (13J1), and said second conduit (13K) being connected to a chromatography column connector (11M) by said second end (13K3) of its first section (13K1);

whereby the bag is configured such that the liquid to treat passes into said chromatography column via one of said first (13J) and second (13K), conduits, exits via the other of said first (13J) and second (13K) conduits, and the liquid to treat may avoid said chromatography column by passing into said fifth conduit (13N).

2. A bag according to claim 1, further comprising a sixth conduit (13A) between a feed pump connector (11A) and a waste container connector (11B).

3. A bag according to claim 2, further comprising a seventh conduit (13D) which extends from a bubble trap connector (11D) until it enters said sixth conduit (13A).

4. A bag according to claim 3, further comprising an eighth conduit (13C) which extends from a feed pump connector (11C) until it enters said seventh conduit (13D).

5. A bag according to claim 4, further comprising at least a ninth conduit (13E) which extends between a bubble trap connector (11E) and an instrumentation connector (11H).

6. A bag according to claim 5, further comprising at least a tenth conduit (13H, 13I) which extends from a filter connector (11I, 11J) until it enters said ninth conduit (13E).

7. A bag according to claim 6, further comprising an eleventh conduit (13F) which extends between a bubble trap connector (11G) and an air connector (11F).

8. A bag according to claim 1, wherein said first end (13K2) of said first section (13K1) of said second conduit (13K) is connected to at least one fraction container connector (11N-Q).

9. A bag according to claim 7, further comprising a twelfth conduit (13B) which extends from a waste container connector (11R) until it enters said second conduit (13K).

10. A bag according to claim 1, wherein said second end (13J3) of said first section (13J1) of said first conduit (13J) is connected to an instrumentation connector (11K).

11. A device for an installation for biological liquid treatment by chromatography, comprising a circuit (8) comprising:

a bag (10) provided with a plurality of connectors (11A-11R) and a network (12) for conveying liquid between said connectors (11A-11R), said conveying network (12) being formed by a plurality of conduits (13A-13Q), the bag (10) further comprising two flexible films (65, 66) fastened to each other, said conduits (13A-13Q) being formed between said two flexible films (65, 66);

a press (9) comprising a first shell (16) and a second shell (17) mounted on said first shell (16), said first shell (16) and second shell (17) cooperating with said bag (10) to form the conduits (13A-13B) of said conveying network (12) between said flexible films (65, 66), by clamping said bag (10) between said first shell (16) and said second shell (17); and

a plurality of valves (125A-W);

wherein a first conduit (13J) is provided with a first section (13J1), which has a first end (13J2) and a second end (13J3) which is an opposite end to the first end (13J1);

wherein a second conduit (13K) is provided with a first section (13K1), which has a first end (13K2) and a second end (13K3) which is an opposite end to the first end (13K2), the first section (13J1) of the first conduit (13J) and the first section (13K1) of the second conduit (13K) being opposite;

wherein a third conduit (13L) has a first end (13L1) and a second end (13L2) which is an opposite end to the first end (13L1), which third conduit (13L) links said respective first ends (13J2, 13K2) of said respective first sections (13J1, 13K1) of said first conduit (13J) and said second conduit (13K) respectively by its first end (13L1) and its second end (13L2);

wherein a fourth conduit (13M) has a first end (13M1) and a second end (13M2) which is an opposite end to the first end (13M1), which fourth conduit (13M) links said respective second ends (13J3, 13K3) of said respective first sections (13J1, 13K1) of said first conduit (13J) and said second conduit (13K) respectively by its first end (13M1) and its second end (13M2);

wherein a fifth conduit (13N) has a first end (13N1) and a second end (13N2) which is an opposite end to the first end (13N1), said fifth conduit (13N) linking both said second end (13J3) of said first section (13J1) of said first conduit (13J) and said first end (13M1) of said fourth conduit (13M) by its first end (13N1), and said fifth conduit (13N) linking both said first end (13K2) of said first section (13K1) of said second conduit (13K) and said second end (13L2) of said third conduit (13L) by its second end (13N2); and

said first conduit (13J) being connected to a chromatography column connector (11L) by said first end (13J2) of its first section (13J1), and said second conduit (13K) being connected to a chromatography column connector (11M) by said second end (13K3) of its first section (13K1); and

wherein a first valve (125L) is situated on said first section (13J1) of said first conduit (13J), a second valve (125N) is situated on said first section (13K1) of said second conduit (13K), a third valve (125P) is situated on said third conduit (13L), a fourth valve (125R) is situated on said fourth conduit (13M), and a fifth valve (125Q) is situated on said fifth conduit (13N).

12. A device according to claim 11, further comprising a sixth valve (125M) situated on said first conduit (13J) between said first end (13J2) of its first section (13J1) and said chromatography column connector (11L).

13. A device according to claim 12, further comprising a seventh valve (1250) situated on said second conduit (13K) between said second end (13K3) of its first section (13K1) and said chromatography column connector (11M).

14. A device according to claim 13, wherein the bag (10) comprises a sixth conduit (13A) between a feed pump connector (11A) and a waste container connector (11B), and the device comprises at least an eighth valve (125A, 125B) situated on said sixth conduit (13A).

15. A device according to claim 14, wherein said bag (10) comprises a seventh conduit (13D) which extends from a bubble trap connector (11D) until it enters said sixth conduit (13A), and the device comprises a ninth valve (125D) situated on said seventh conduit (13D).

16. A device according to claim 15, wherein said bag (10) comprises an eighth conduit (13C) which extends from a feed pump connector (11C) until it enters said seventh conduit (13D), and the device comprises a tenth valve (125C) situated on said eighth conduit (13C).

17. A device according to claim **16**, wherein said bag (**10**) comprises a ninth conduit (**13**E) which extends between a bubble trap connector (**11**E) and an instrumentation connector (**11**H), and the device comprises at least an eleventh valve (**125**E, **125**H, **125**I) situated on said ninth conduit (**13**E).

18. A device according to claim **17**, wherein said bag (**10**) comprises at least a tenth conduit (**13**H, **13**I) which extends from a filter connector (**11**I, **11**J) until it enters said ninth conduit (**13**E), and the device comprises at least a twelfth valve (**125**J, **125**K) situated on said at least a tenth conduit (**13**H, **13**I).

19. A device according to claim **18**, wherein said bag (**10**) comprises an eleventh conduit (**13**F) which extends between a bubble trap connector (**11**G) and an air connector (**11**F), and the device comprises at least a thirteenth valve (**125**F) situated on said eleventh conduit (**13**F).

20. A device according to claim **19**, wherein said first end (**13**K**2**) of said first section (**13**K**1**) of said second conduit (**13**K) is connected to at least one fraction container connector (**11**N-Q), and the device comprises a fourteenth valve (**125**W) situated on said second conduit (**13**K).

21. A device according to claim **20**, wherein said bag (**10**) comprises a twelfth conduit (**13**B) which extends from a waste container connector (**11**R) until it enters said second conduit (**13**K), and the device comprises a fifteenth valve (**125**V) situated on said twelfth conduit (**13**B).

22. A device according to claim **17**, further comprising a pressure sensor (**126**) situated on said ninth conduit (**13**E).

* * * * *

UNITED STATES PATENT AND TRADEMARK OFFICE

CERTIFICATE OF CORRECTION

PATENT NO. : 9,174,145 B2
APPLICATION NO. : 13/161983
DATED : November 3, 2015
INVENTOR(S) : Jean-Louis Weissenbach et al.

It is certified that error appears in the above-identified patent and that said Letters Patent is hereby corrected as shown below:

In The Claims

In column 20, line 50, in claim 13, delete "1250" and insert -- 125O --, therefor.

Signed and Sealed this
Eighth Day of March, 2016

Michelle K. Lee

Michelle K. Lee
Director of the United States Patent and Trademark Office