US00D797743S

(12) **United States Design Patent**
Awad et al.

(10) **Patent No.: US D797,743 S**
(45) **Date of Patent: ** Sep. 19, 2017**

(54) **TOTEM CONTROLLER**

(71) Applicant: **MAGIC LEAP, INC.**, Dania Beach, FL (US)

(72) Inventors: **Haney Awad**, Fort Lauderdale, FL (US); **Shigeru Natsume**, Weston, FL (US)

(73) Assignee: **MAGIC LEAP, INC.**, Plantation, FL (US)

(**) Term: **15 Years**

(21) Appl. No.: **29/575,031**

(22) Filed: **Aug. 22, 2016**

(51) **LOC (10) Cl.** **14-03**

(52) **U.S. Cl.**
USPC **D14/412**; D21/333

(58) **Field of Classification Search**
USPC ..... D14/399–401, 412–416, 217, 218, 356, D14/432–434, 454, 496; D21/324, 332, D21/333; 273/148 B; 463/1, 29–25, 46, 463/47; 345/156–161, 905; D12/174, D12/178–180; 74/489, 551.8, 551.9; D13/168
CPC A63F 9/00; A63F 9/24; A63F 13/00; A63F 13/02; A63F 9/25
See application file for complete search history.

(56) **References Cited**

U.S. PATENT DOCUMENTS

6,850,221 B1 * 2/2005 Tickle G06F 3/0338 345/157
D567,243 S * 4/2008 Ashida D14/412
D587,713 S * 3/2009 Sutton D14/412
D589,515 S * 3/2009 Brunner D14/412
D594,066 S * 6/2009 Oikawa D14/412
D611,477 S * 3/2010 Brunner D14/412
D638,841 S * 5/2011 Musick, Jr. D14/412
D658,184 S * 4/2012 Chang D14/413
8,523,675 B2 * 9/2013 Young ..... A63F 13/06 273/148 B
D698,358 S * 1/2014 Beams D14/412
9,081,426 B2 * 7/2015 Armstrong G05G 9/04737
D740,369 S * 10/2015 Cho D21/333
D763,359 S * 8/2016 Kwong D14/401

* cited by examiner

Primary Examiner — Prabhakar G Deshmukh
(74) *Attorney, Agent, or Firm* — Vista IP Law Group, LLP

(57) **CLAIM**

We claim the ornamental design for a totem controller, as shown and described.

DESCRIPTION

FIG. **1** is a front perspective view of a totem controller showing our design;
FIG. **2** is a front view thereof;
FIG. **3** is a rear view thereof;
FIG. **4** is a left side view thereof;
FIG. **5** is a right side view thereof;
FIG. **6** is a top view thereof; and,
FIG. **7** is a bottom view thereof.

1 Claim, 7 Drawing Sheets

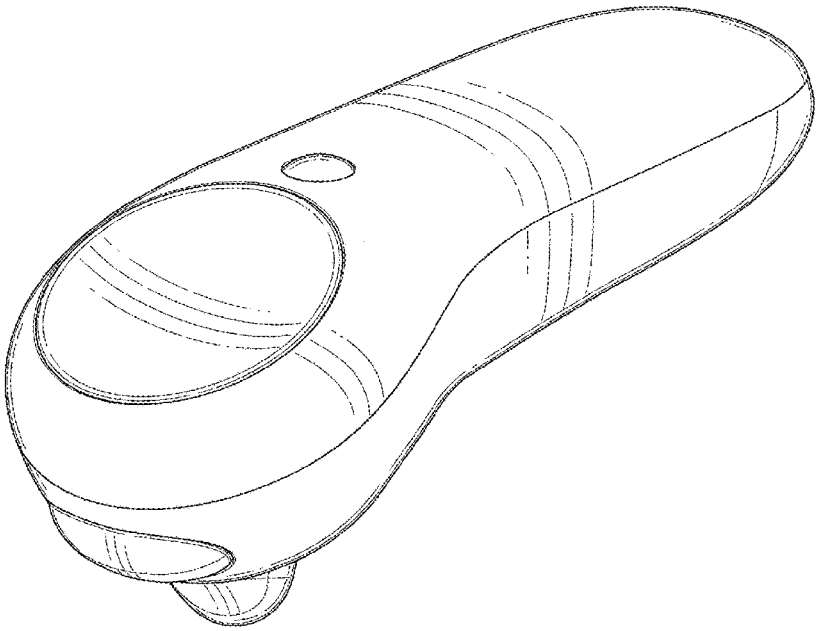

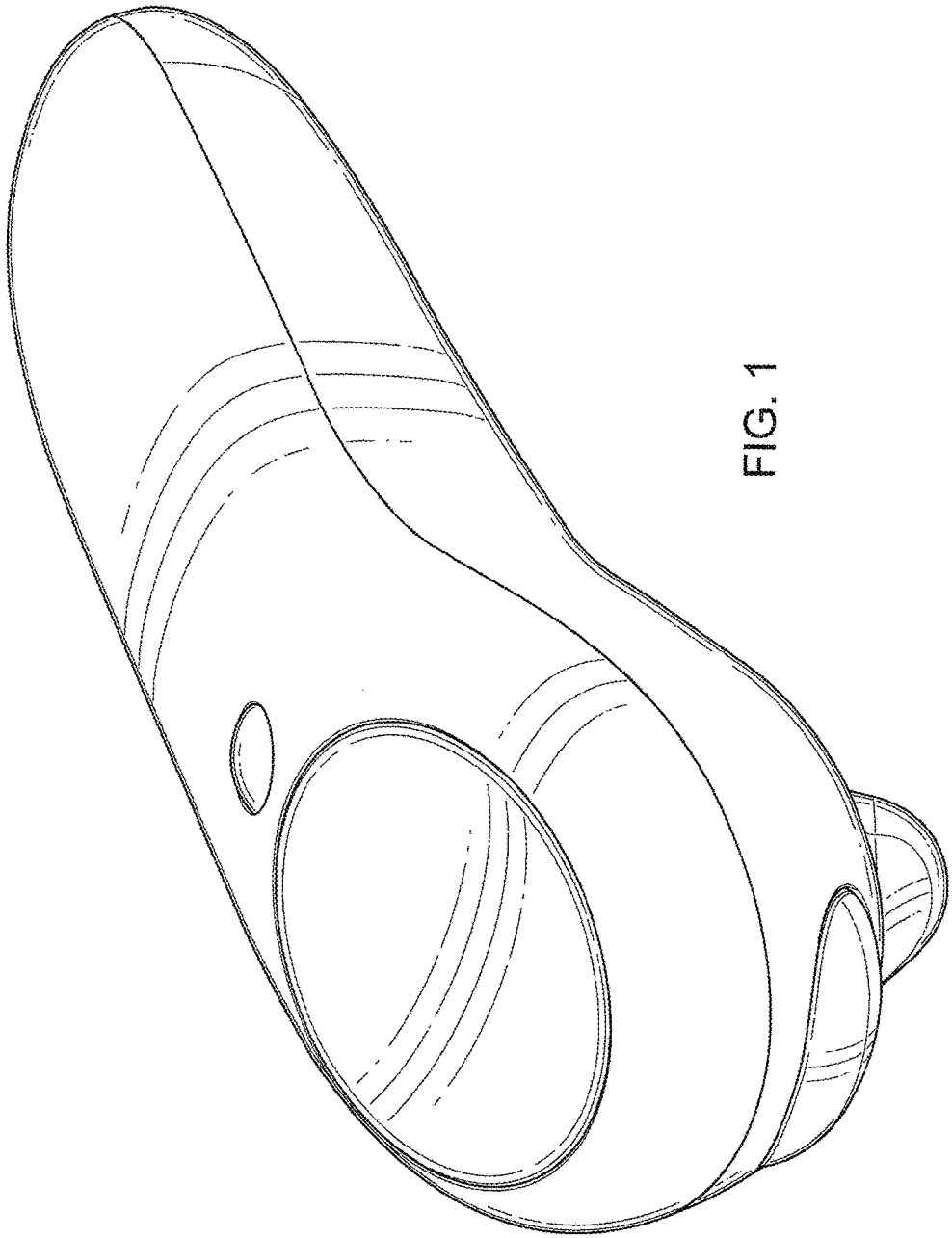

FIG. 1

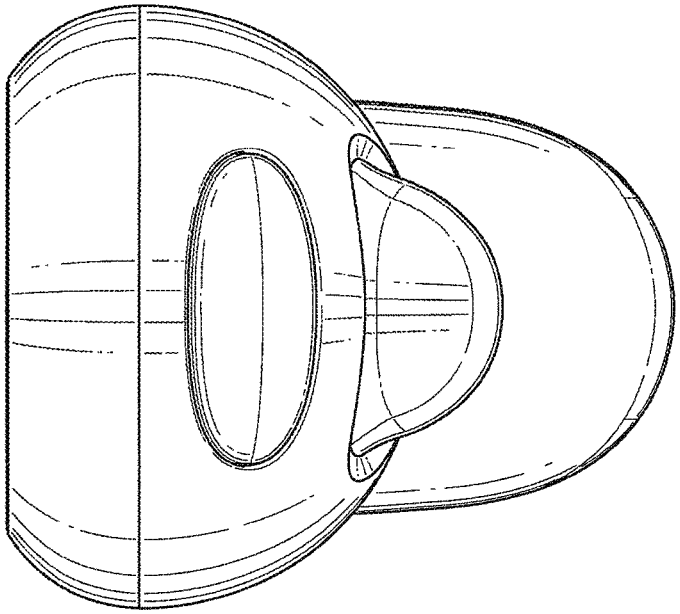

FIG. 2

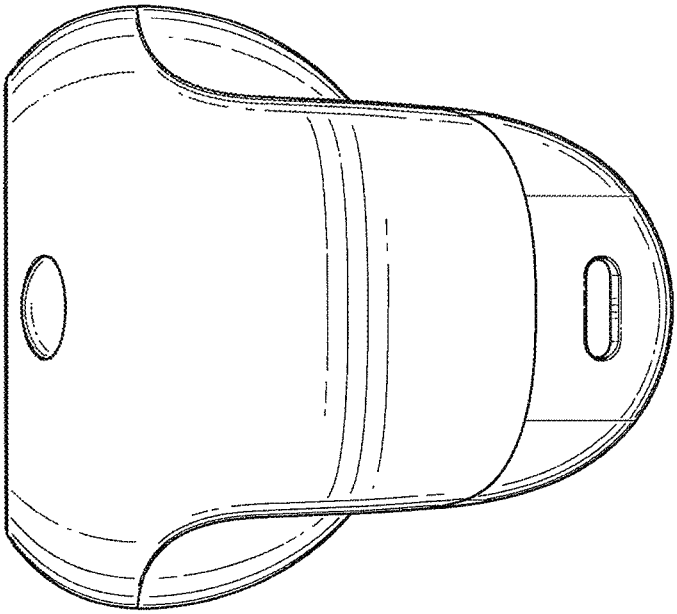

FIG. 3

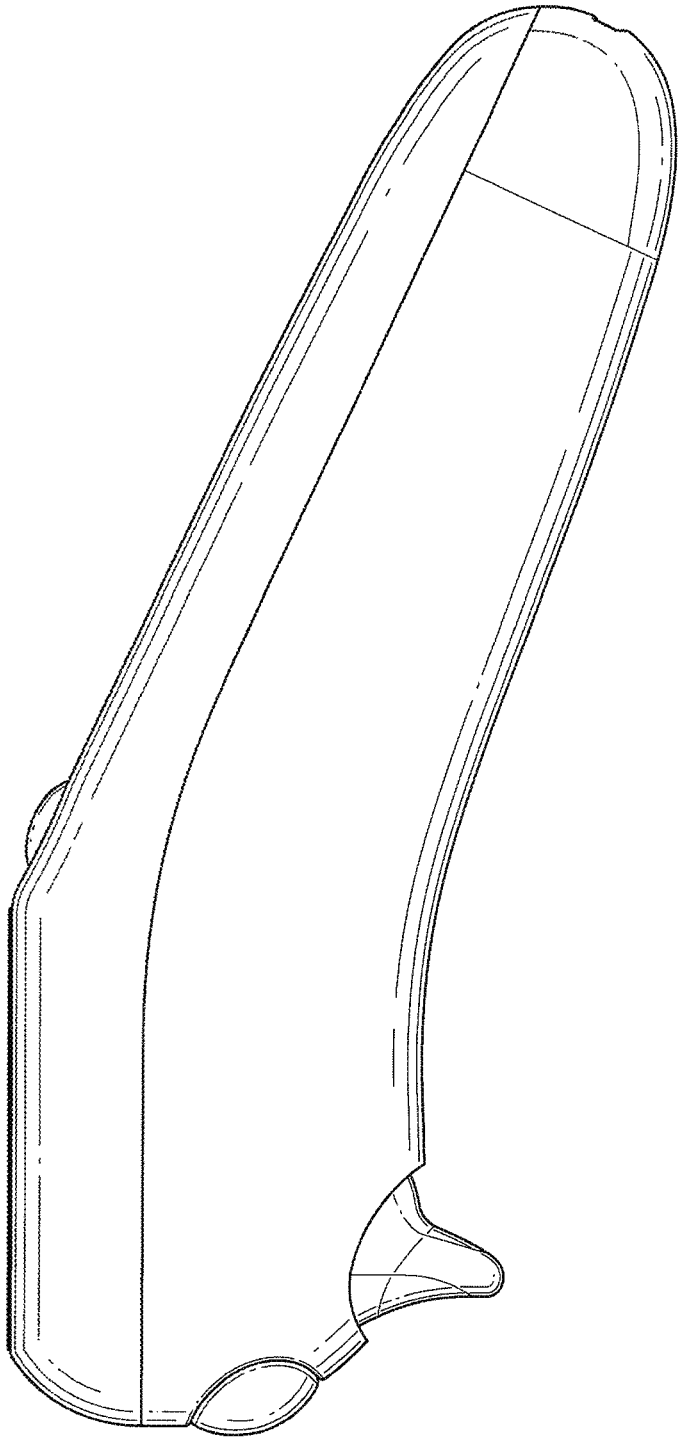

FIG. 4

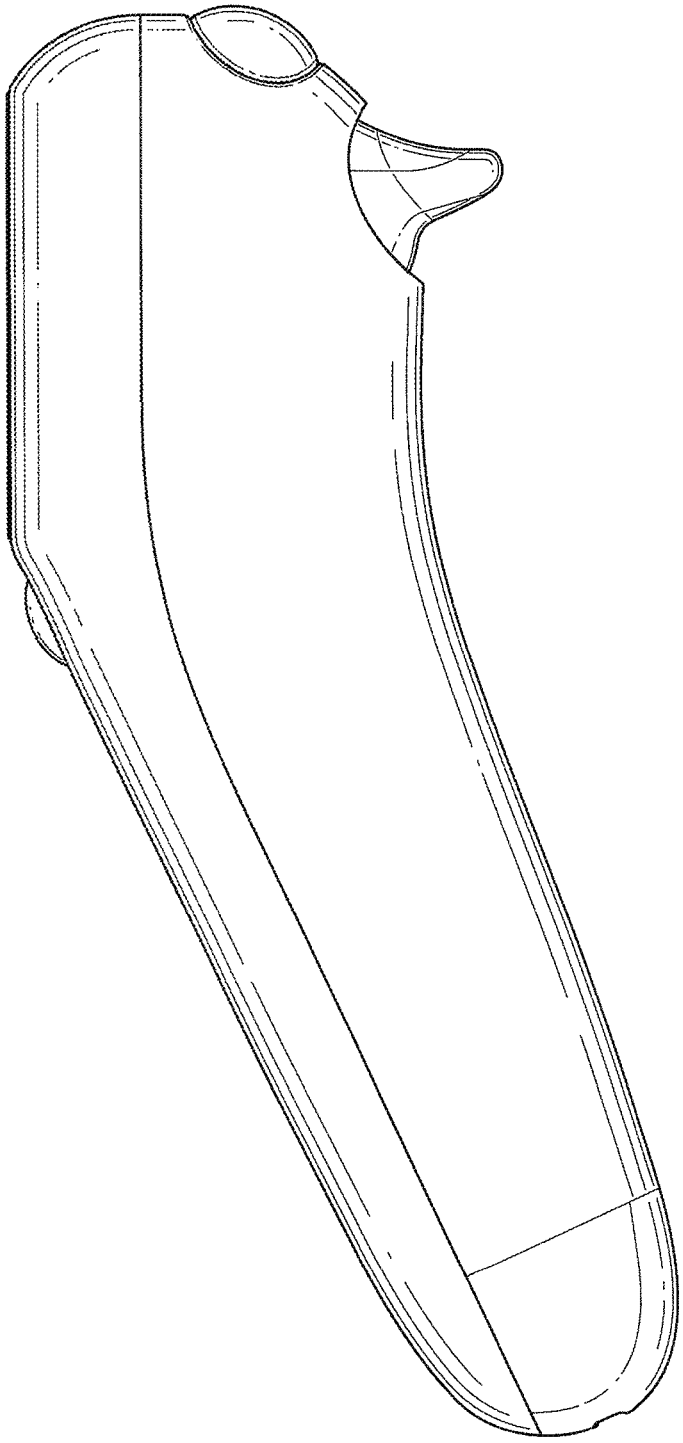

FIG. 5

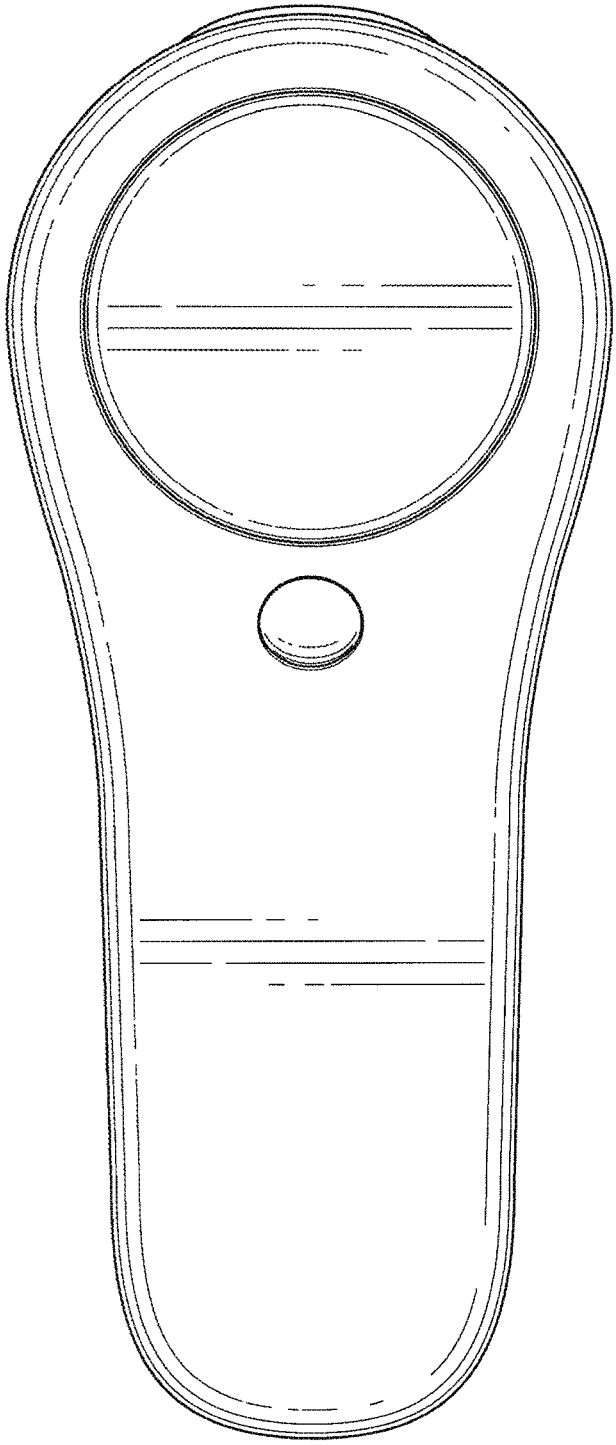

FIG. 6

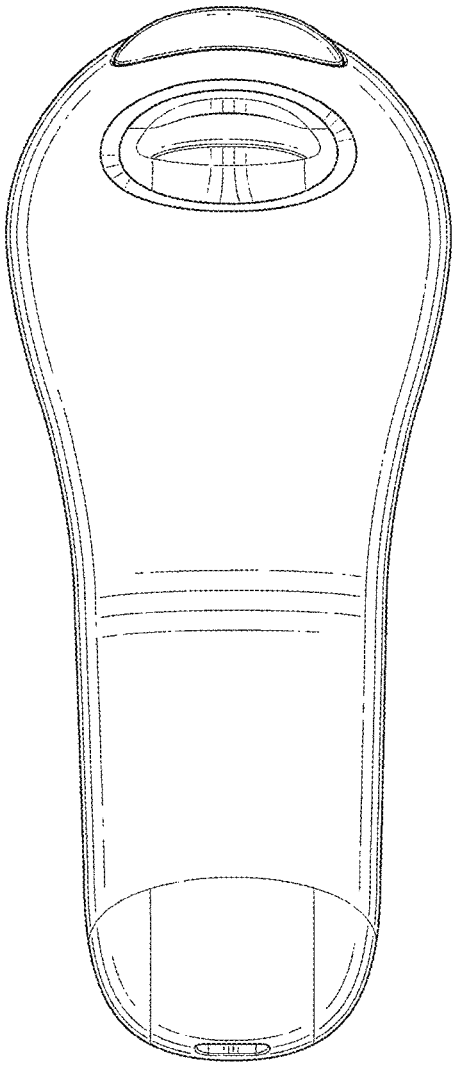

FIG. 7