US009448043B2

(12) **United States Patent**
Roberts

(10) **Patent No.: US 9,448,043 B2**
(45) **Date of Patent: Sep. 20, 2016**

(54) **INTERACTIVE TARGET AND SYSTEM FOR LONG RANGE SHOOTING**

(71) Applicant: **Roberts Tactical Precision, Inc.**, Arlington, WA (US)

(72) Inventor: **Kirk J. Roberts**, Arlington, WA (US)

(73) Assignee: **Roberts Tactical Precision, Inc.**, Alrington, WA (US)

(*) Notice: Subject to any disclaimer, the term of this patent is extended or adjusted under 35 U.S.C. 154(b) by 0 days.

(21) Appl. No.: **14/193,846**

(22) Filed: **Feb. 28, 2014**

(65) **Prior Publication Data**

US 2015/0247709 A1 Sep. 3, 2015

(51) **Int. Cl.**

G08B 1/08	(2006.01)
F41J 5/14	(2006.01)
F41J 5/04	(2006.01)
F41J 5/056	(2006.01)

(52) **U.S. Cl.**

CPC .. ***F41J 5/14*** (2013.01); ***F41J 5/04*** (2013.01); ***F41J 5/056*** (2013.01)

(58) **Field of Classification Search**

None

See application file for complete search history.

(56) **References Cited**

U.S. PATENT DOCUMENTS

3,434,226	A *	3/1969	Schaller	434/22
5,375,847	A *	12/1994	Fromm et al.	463/5
5,437,463	A *	8/1995	Fromm	463/5
2003/0134700	A1*	7/2003	Salva	473/476
2003/0171150	A1*	9/2003	Oki	F41J 5/14 463/51
2003/0195046	A1*	10/2003	Bartsch	463/49
2005/0153262	A1*	7/2005	Kendir	434/21
2013/0065713	A1*	3/2013	Faecher	G06F 1/1626 473/480
2013/0193645	A1*	8/2013	Kazakov et al.	273/372
2014/0027982	A1*	1/2014	Chiu	F41J 9/00 273/359
2014/0151965	A1*	6/2014	Garas	273/371
2014/0367918	A1*	12/2014	Mason	273/371
2015/0025842	A1*	1/2015	Hodge	702/150
2015/0123346	A1*	5/2015	Mason	273/371
2015/0354922	A1*	12/2015	Carriere	F41G 3/2616 434/21
2016/0084618	A1*	3/2016	Hong	F41J 5/14 273/371

* cited by examiner

Primary Examiner — Julie Lieu

(74) *Attorney, Agent, or Firm* — Mark P. Waters; Lowe Graham Jones PLLC

(57) **ABSTRACT**

An interactive target assembly is disclosed and claimed herein wherein the target assembly is meant to provide real-time feedback to a shooter or other remote onlooker. The shooter or other party can visually detect a strike to the target by way of a high powered LED light that is in wired communication with a target control module. The target control module is thereby in wireless communication via a multi-channel receiver with a remote control and an impact detection module. The impact detection module detects an impact to the target, sending a signal to the target control module, which illuminates a light to indicate a strike.

14 Claims, 6 Drawing Sheets

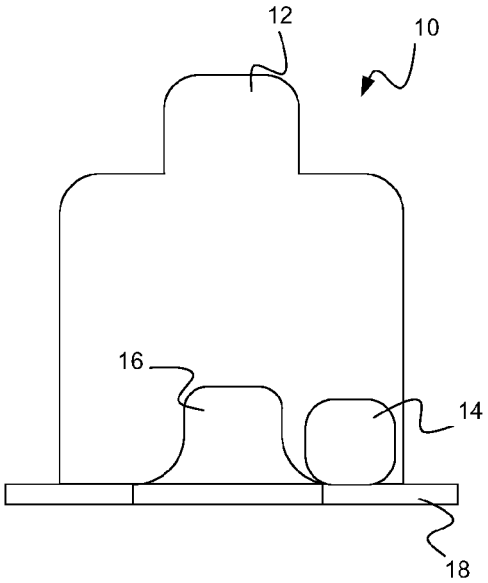

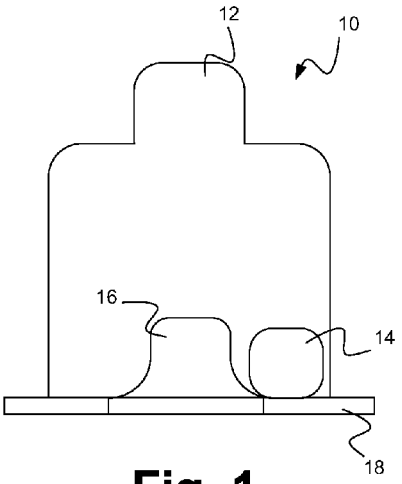

Fig. 1

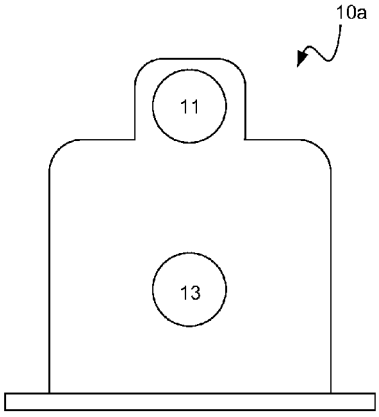

Fig. 1A

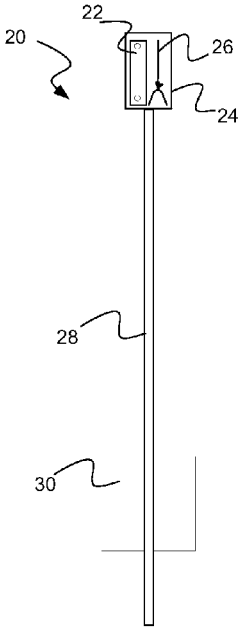

Fig. 2

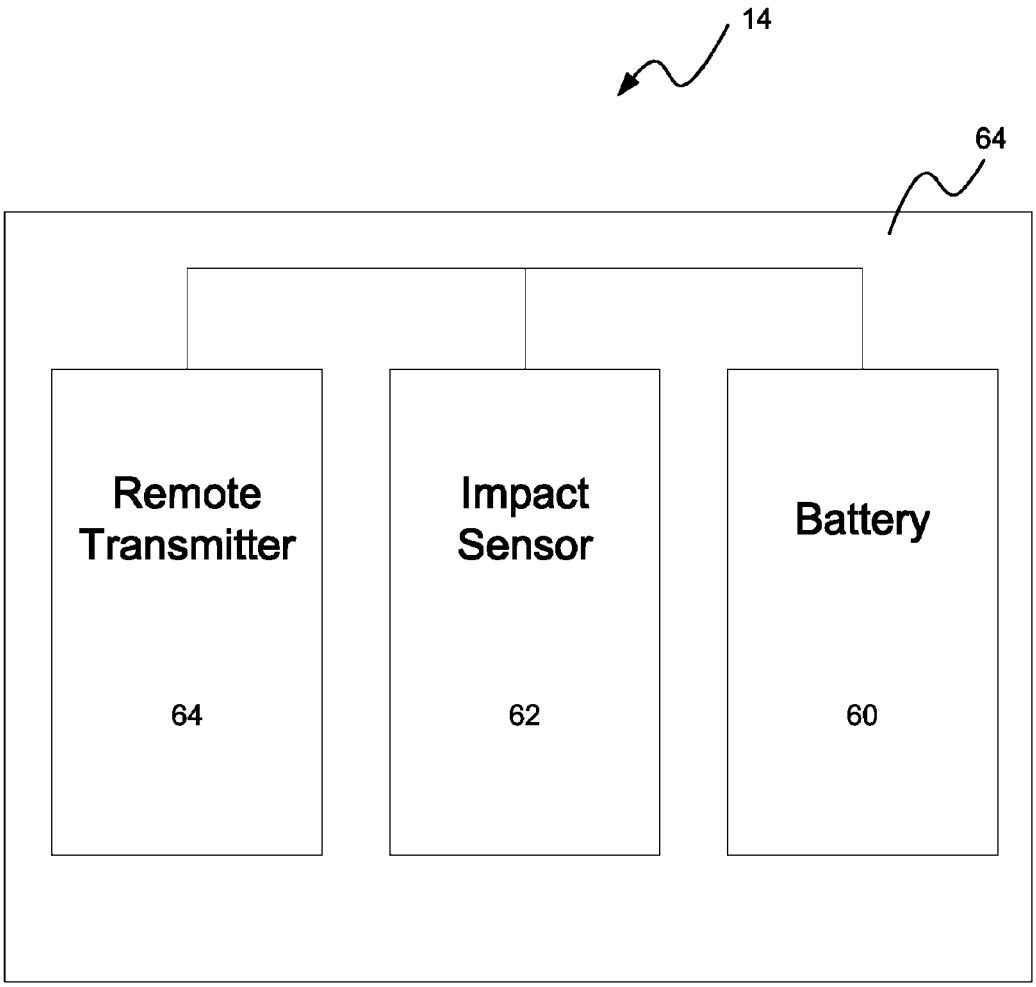

Fig. 3

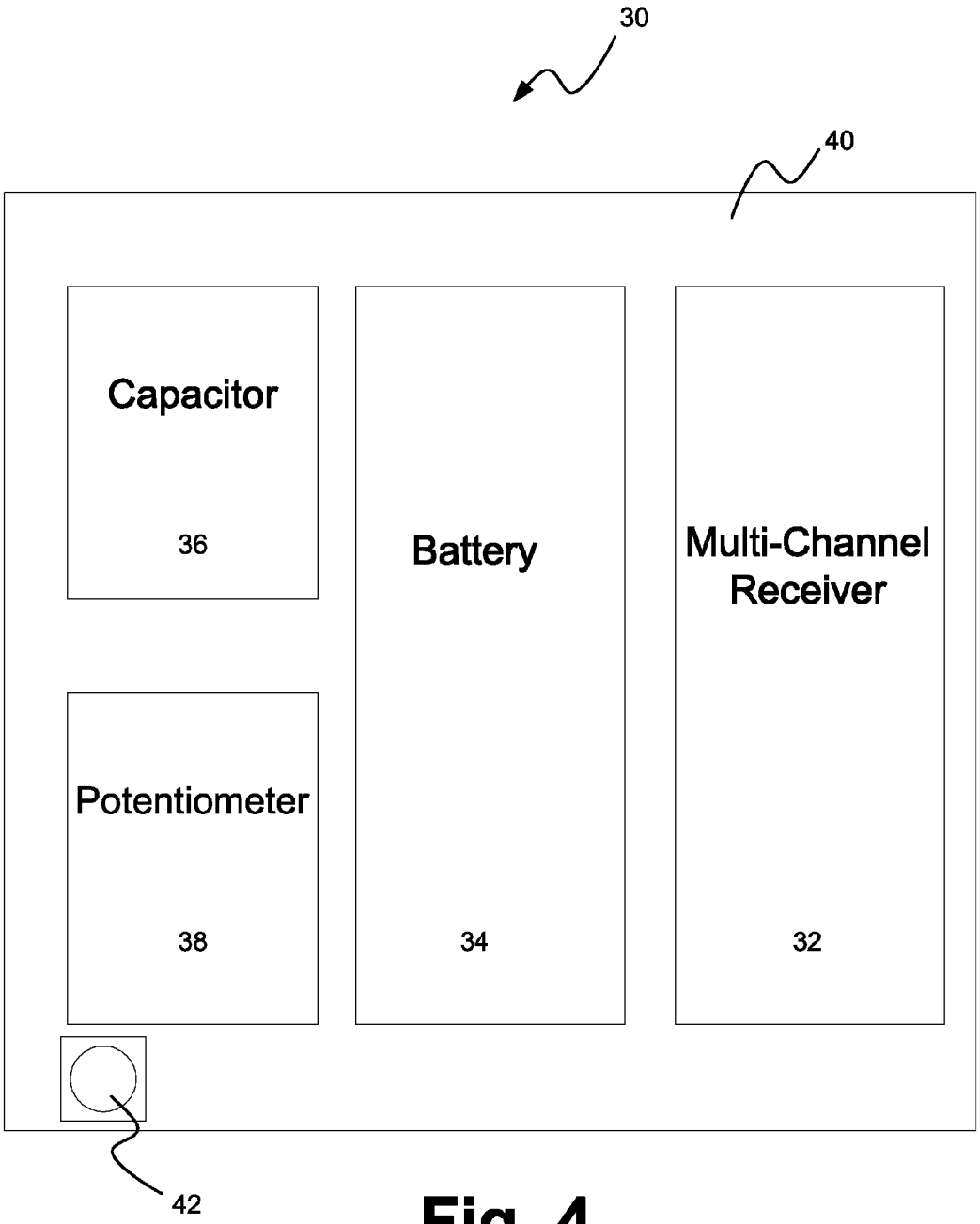
30
40
Capacitor
36
Battery
34
Multi-Channel Receiver
32
Potentiometer
38
42

Fig. 4

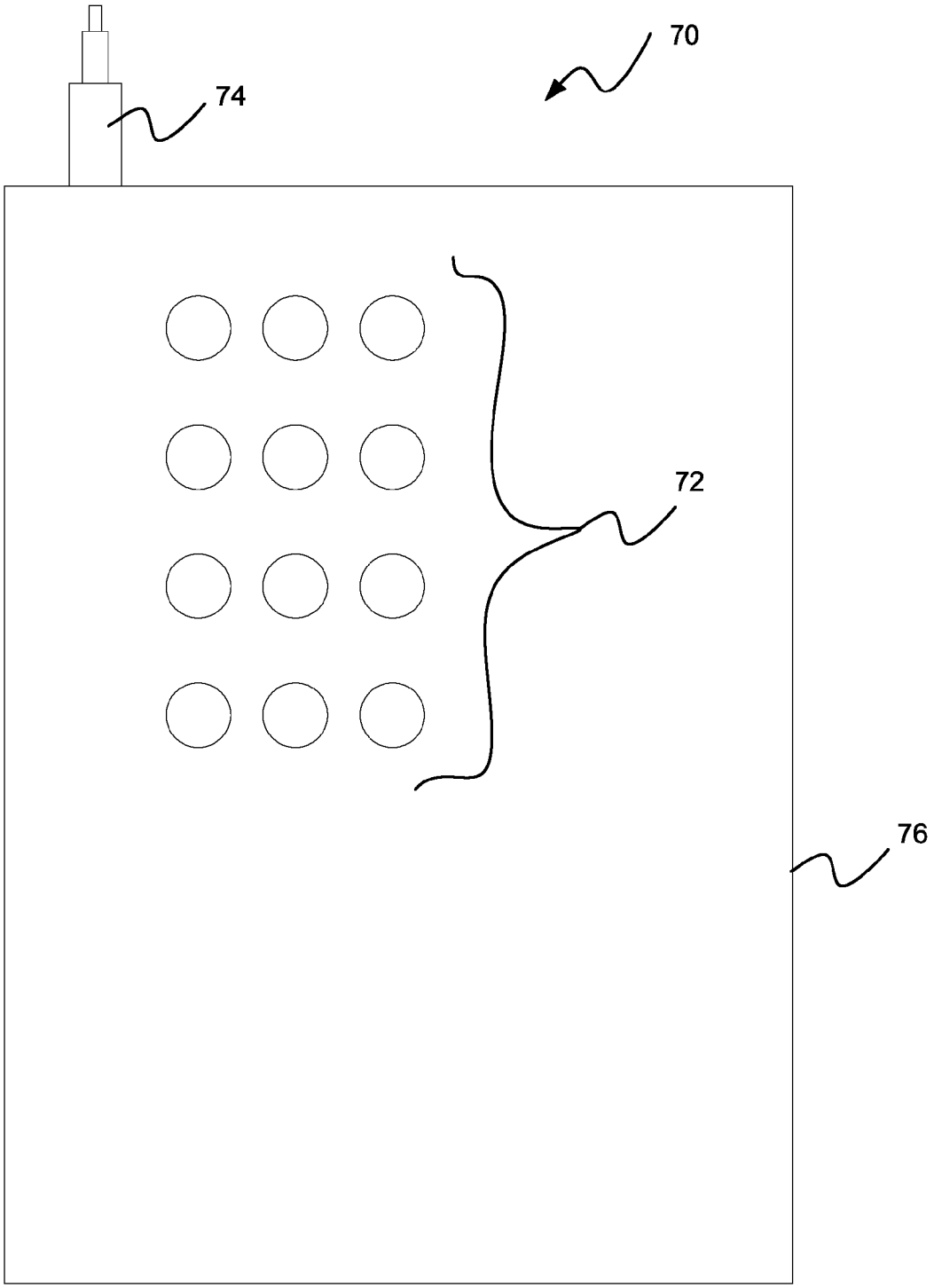

Fig. 5

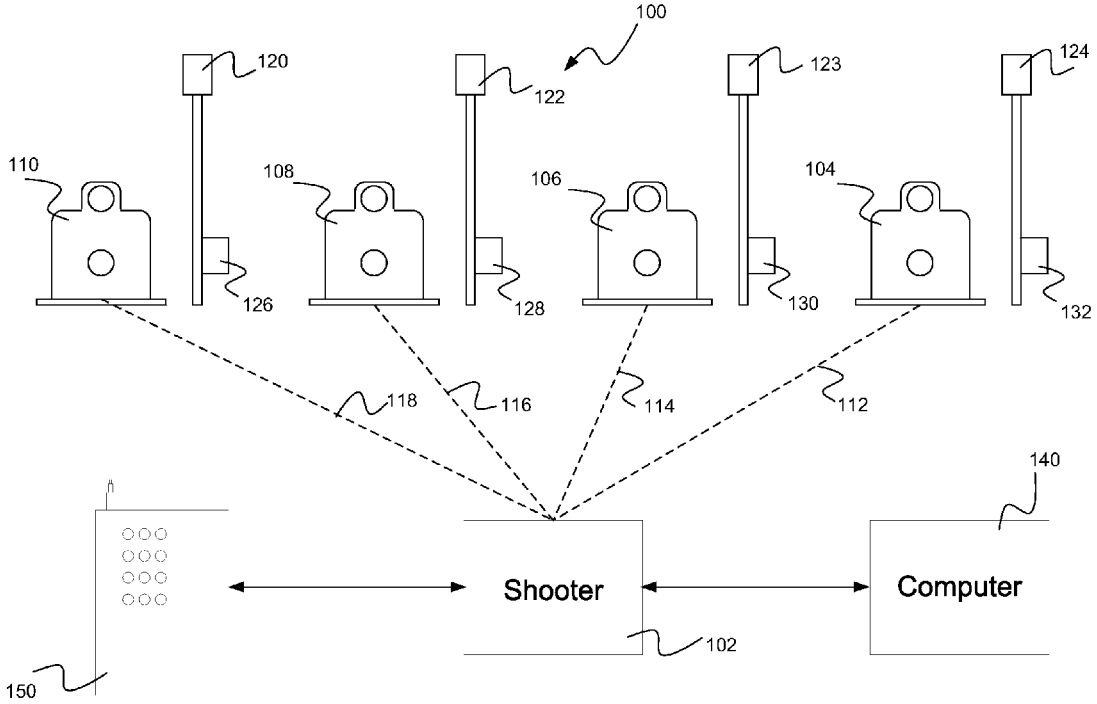
100
120
122
123
124
110
108
106
104
126
128
130
132
118
116
114
112
140
Shooter
Computer
102
150

Fig. 6

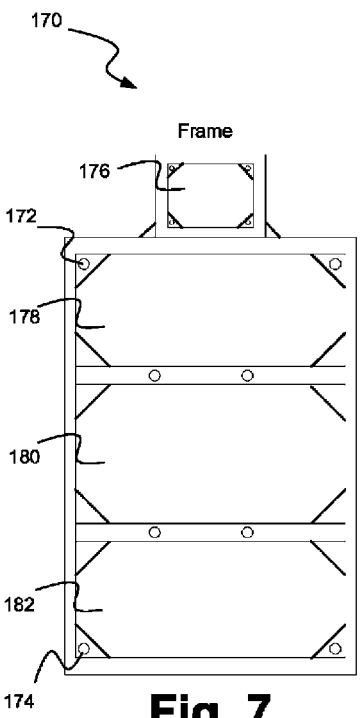

Fig. 7

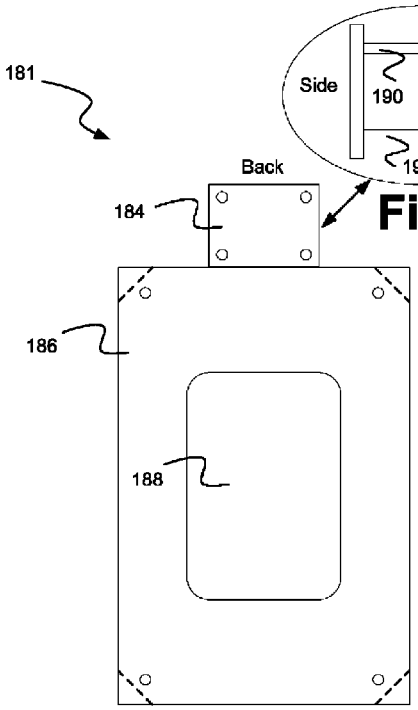

Fig. 8

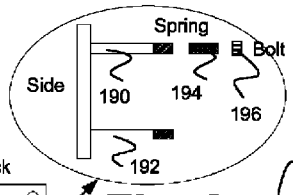

Fig. 9

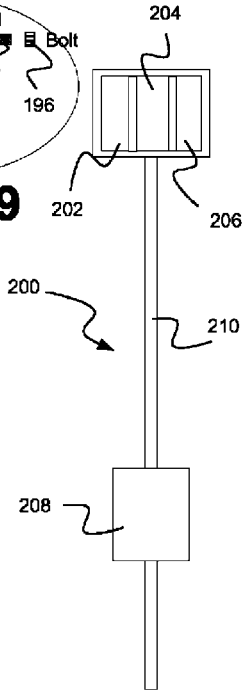

Fig. 10

INTERACTIVE TARGET AND SYSTEM FOR LONG RANGE SHOOTING

FIELD OF THE INVENTION

The invention relates to long range shooting, particularly to targets for long range shooting that provide feedback to the shooter.

BACKGROUND OF THE INVENTION

Long range, precision shooting is a skill that requires extensive training and the use of repeated shots at a target or a plurality of targets. Ideally, targets used for such training are reusable and due to the high velocity of long range firearm ammunition, long range targets must be constructed of highly durable materials. Due to the relatively long distances involved in target training, often in excess of 500 yards, recovery of the target to inspect for hits after a selected number of shots to judge the shooter's accuracy is impractical unless the shooter is willing to wait the time necessary for the target area to be cleared of shooters and for travel to be made to the location of the target so that the target may be inspected. Time necessary for such an inspection does not permit the shooter to make real-time adjustments or to examine his or her position or settings in real-time in order to make necessary adjustments.

Military groups may employ long range metal targets made from sheets of R5400 steel or Hardox, generally approximately 1 cm thick. The targets can be suspended from A-frames or other similar suspension devices and placed at certain known distances from the shooting position. Such targets are often too far away for the shooter or others to visually ascertain the quality or quantity of a hit from the shooter's position without the use of a spotting scope or some other enhanced optical device. The use of a spotting scope or other enhanced optical device is cumbersome and time consuming for the shooter and does not provide the opportunity for the shooter to make adjustments based on feedback from the target being provided in real-time.

At very long ranges, in excess of 500 yards, however, the skill of the shooter and the consistency of the ammunition is often not enough to insure that the shooter will hit the target. In such situations, real-time feedback from the target can be helpful to determine what adjustments may be necessary under certain shooting conditions.

Some of the factors impacting accuracy, where real-time feedback is particularly helpful include "bullet drop." "Bullet drop" is caused by the influence of gravity on the moving bullet and is characterized by a bullet path which curves toward earth over long ranges. Therefore, to hit a target at long range, it may be necessary to elevate the barrel of the weapon, and the aiming point, to adjust for bullet drop.

Other factors, such as wind, Magnus effect (i.e., a lateral thrust exerted by wind on a rotating bullet whose axis is perpendicular to the wind direction), projectile design, projectile spin, Coriolis effect, and the idiosyncrasies of the weapon or projectile can change the projectile's path over long range. Such effects are generally referred to as "windage" effects. Therefore, for example, to hit a target at long range, it may be necessary to correct for windage by moving the barrel of the weapon slightly to the left or the right to compensate for windage effects. When shooting East and West the elevation will be effected. Shooting due East, the bullet impact will be high. Shooting due West, the bullet impact will be low. The elevation at extended range might

change slightly up or down depending on the spin of the projectile in a right hand or left hand twist barrel. Thus, for example, in order to hit a target at long range, the shooter must see the target, accurately estimate the range to the target, estimate the effect of bullet drop and windage effects on the projectile, and use this information to properly position the barrel of the firearm prior to squeezing the trigger. In all these situations, obtaining real-time feedback from the target can be helpful in making necessary adjustments.

Sometimes long range targets may be configured to provide audio feedback, but audio feedback can be misinterpreted and mishits may be recorded as hits using audio feedback. For example, sometimes rocks or other debris may come into contact with the target, making a sound when it hits the target. In such cases, the round may not have hit the target, but the debris may nevertheless be recorded as a hit.

There are other problems with targets configured to provide audio feedback. Principally, these targets generally have no capacity to provide precision location information for hits. Meaning, they do not provide accurate information regarding what part of the target was hit. Additionally, these targets are hard to use in relatively noisy locations such as in busy shooting ranges or in heavy training drills where multiple shooters are training to engage the closely positioned targets.

The percussive force of a long range firearm round is jarring and can dislodge or damage the target. Due to the high velocity of long range rounds, the metal targets used are subjected to significant momentary deformation upon impact which generates severe vibrations in the target. These vibrations are so severe that they often lead to damage of bolted or welded connections on the target, for example for the connection to the target suspension structure. In long range targets, cracking and failure of bolts and welds are commonly observed after even a short period of use, due to this severe vibration or stress

Long range targets, although constructed to withstand impact without penetration are often also permanently deformed, especially when used at the close end of the target range. Such permanent deformations place additional strain on the target already stressed by the repeated vibration load and accelerate target disintegration. Thus, using laminated structures and/or specialized pockets directly attached to the target for mounting devices to a long range target are undesirable, since they may not be able to reliably withstand repeated use of the target.

Additionally, for shooting competitions, the range operator or scorekeeper cannot always tell whether the target has been hit. This is especially true during competitions held in bad visibility conditions or over long ranges in excess of 1000 or 1500 yards. In such a case, the scorekeeper or range operator must use a spotting scope and scoring takes time away from other activities. Furthermore, spectators are largely unable to see hits in real-time during competition.

There is a need, therefore, for durable, reusable targets for use in long range shooting that can withstand multiple hits and can provide feedback to the shooter on a real-time basis regarding the hit, and in particular the quality or location of the hit. There is also a need to provide information from the target to the shooter in real-time that may be used to adjust for the effects of windage, bullet drop, Magnus effect, and other anomalies impacting the accuracy of shooting at long range. Finally, there exists a need for an interactive target that can display and confirm hits via a color coordinated lighting system which is not only viewable from the shooting position, but visible to spectators and shooting range

operators or score keepers without the use of a spotting scope or other optical devices.

SUMMARY OF THE INVENTION

An interactive target for long range shooting comprising a target assembly is disclosed and claimed. The target assembly includes an impact surface and an impact detection module, wherein the impact detection module includes an impact sensor, a remote transmitter, and a battery. The interactive target also includes a light and a target control module, wherein the target control module includes a multi-channel receiver, a battery, a capacitor, and a potentiometer.

The invention also includes an interactive target for long range shooting where the interactive target comprises a target assembly with an impact surface, the target assembly further including a target control module and a light; wherein the target control module is wired to the light and wherein the target control module has a multi-channel receiver configured to receive signals from a plurality of remote devices.

Finally, the invention includes a system for long range shooting comprising the following a plurality of targets, a plurality of impact detection modules, a plurality of target control modules, a plurality of lights, and a computer.

BRIEF DESCRIPTION OF THE DRAWINGS

Preferred and alternative examples of the present invention are described in detail below with reference to the following drawings:

FIG. **1** is a rear view, representative of the backside of a long range target constructed in accordance with principles of the present invention.

FIG. **1**A is a front view, representative of the front side of a long range target constructed in accordance with principles of the present invention.

FIG. **2** is a target indication assembly, representative of the kind built in accordance with principles of the present invention.

FIG. **3** is a schematic representation of an impact detection module built in accordance with principles of the present invention.

FIG. **4** is a schematic representation of a target control module built in accordance with principles of the present invention.

FIG. **5** is a remote control module programmable and useable in accordance with principles of the present invention.

FIG. **6** is a schematic representation of an interactive long range target shooting system constructed in accordance with principles of the present invention.

FIG. **7** is a frame for a multi-quadrant target constructed in accordance with principles of the present invention.

FIG. **8** is a panel assembly for a multi-quadrant target constructed in accordance with principles of the present invention.

FIG. **9** is a side view of a panel for a multi-quadrant target constructed in accordance with principles of the present invention.

FIG. **10** is a target indication assembly, representative of the kind built in accordance with principles of the present invention.

DETAILED DESCRIPTION OF THE PREFERRED EMBODIMENT

FIGS. **1** and **1**A show a target constructed in accordance with principals of the present invention. In FIG. **1**, the target assembly **10** shows the rear surface **12** of target assembly **10**. FIG. **1**A shows the impact surface of target assembly **10**, as well as a first target indicator **11** and second target indicator **13**. First target indicator **11** and second target indicator **13** may be of a variety of contrasting colors when compared to the tone or background color of the impact surface; this is in order to assist the shooter in spotting the target through a scope or other spotting device. The target assembly **10** sits atop a base **18** that provides substantial support in order maintain the target assembly **10** in a substantially upright position. Base **18** may take on any number of configurations, including a generally rectangular configuration, a circular configuration, a hexagonal configuration or be constructed out of several strips of longitudinally extending steel. Base **18**, regardless of the shape, may include a variety of fastening holes through which bolts and nuts may be used to securely affix target assembly **10** atop another structure, such as a moveable target track, a vehicle, or other device or arrangement.

The shape of the impact surface for target assembly **10** as shown in FIGS. **1** and **1**A is generally a "head" and "body" configuration constructed from one sheet of material cut generally into an eight-sided shape, with the head portion at one end of the shape, demarked by three sides, where two opposing sides are connected by a third side at generally right angles. The corners of the sheet are rounded, but need not be. In general, the shape of the impact surface for assembly **10** is not intended to be a limiting feature of the invention; it is being described here for illustrative rather than limiting purposes.

In general, target assembly **10** has a front, impact surface and a rear surface and is constructed of hardened steel for withstanding repeated impact by high velocity rounds on the impact surface without penetration. Target assembly **10** may include a heating element that heats a target region of the target so that the target may be better seen through night-vision optical devices designed for training in the dark and for picking up on contrasting heat signatures.

As shown in FIG. **1**, target assembly **10** includes an impact detection module **14** and a hinge assembly **16**. Hinge assembly **16** utilizes hinges integrally formed from the same material as the target assembly, a rotational pin, and a heavy-duty spring. The heavy-duty spring is biased to return the impact surface of target assembly **10** into a substantially upright position after the impact surface is struck by a round. In operation, the impact surface will tip in the direction of impact in response to a hit, and the target will thereafter return to a substantially upright position following a hit due to the tension in the spring.

Impact detection module **14** may be fastened to the rear surface of target assembly **10** using fastening structures. The fastening structure includes a vibration dampening portion for at least partially insulating the impact detection module **14** and potentially a heating element from vibrations of the target body generated on impact by the firearm round. The target is preferably made of R5400 steel or HARDOX500 steel.

With further reference to FIGS. **1** and **1**A, the target assembly **10** can be fabricated from armor plate steel (AR Hardox R600, R500, or similar) and has a front, impact surface and a rear surface **12**. The target assembly **10** is generally about 24" high and has a thickness of about ⅜". Thicker plates can be employed for use in target practice with .50 caliber firearms.

Preferred fastening materials for use in connection with the attachment of impact detection module **14** to the rear surface **12** of target assembly **10** include liquids or gels

which are settable and which retain a high degree of elasticity after full curing. Exemplary materials are commercially available silicone rubber or butyl rubber compounds. Preferred adhesive fastening materials are those which remain not only flexible, but elastic after curing, to maintain any vibrational, thermal, and mechanical connection to the target assembly **10** even if the latter is deformed, for example by projectile impact.

Although the targets of the invention have been described above for use as stationary targets for long range firearm training, they can also be adapted for various other firearm training scenarios. For example, the targets can be directly mounted on the ground or mounted in an A-frame or on moveable tracks or devices. For shorter range applications, the target body shape may be altered (i.e., an 8" by 8" square sheet of AR 500, AR 600 steel, or equivalent). In this embodiment, the target would be preferably mounted at an angle tilted away from the shooter, preferably at an angle of not less than 30 degrees.

In addition to the discussion above pertaining to target assembly **10** shown in FIGS. **1** and **1**A, the invention can be further described by reference to FIG. **2** which shows a target indication assembly **20**. Target indication assembly **20** includes an uppermost light **22** which is preferably encased in a weather proof encasement **24**. Weather proof encasement **24** is sized and configured to house an antenna **24**. Antenna **24** is in communication with devices located at long ranges from the target area, i.e., distances greater than 500 yards.

With further reference to FIG. **2**, target indication assembly **20** includes a pole **28** and a target control module **30**. Pole **28** may be constructed from any lightweight and durable material. As constructed in this particular embodiment, target control module **30** is in wired communication with light **22**, but the invention contemplates a completely wireless design and communication between target control module **30** and light **22**.

As constructed in this particular embodiment, target control module **30** is in wireless communication with impact detection module **14** (depicted in FIG. **1**), but the invention contemplates a wired design as well, whereby target control module **22** may be "hardwired" to impact detection module **14** (depicted in FIG. **1**).

Impact detection module **14** is configured to include RF communication that will trigger a pre-determined communication signal upon impact of the target assembly **10**. In general, impact detection module **14** will send an RF signal to an RF receiver located inside of target control module **30**, whereupon target control module **30** will supply power to light **22** to signal a hit on the target. Target control module **30** may also be in wireless communication with other devices remotely located from the shooting position. For example, in one embodiment, a second channel of the same receiver located inside of target control module **30** is in wired communication with antenna **26**, which, in turn, receives wireless RF signals from long range, i.e., from distances greater than 500 yards. These long range wireless signals may include a remote control indicator that is configured and programmed to power the target indication assembly **20** on and off. Moreover, this long range wireless signal may power on the light **22**, so that the shooter or spotter may indicate that the target is ready to be engaged. Additionally, these long range wireless signals may trigger any number of switches intended to change shooting conditions, such as triggering a heat element for night training, or trigger movement for engagement of a moving target.

Preferably, target control module **30** is in wireless communication with impact detection module **14** and the target assembly **10** is not more than 150 feet away from target indication assembly **20** and thereby not more than 150 feet away from target control module **30**. Most preferably, target assembly **10** is not more than 50 feet away from target indication assembly **20**.

Light **22** is preferably an LED light that is of sufficient brightness to be seen from long ranges, i.e., from distances greater than 500 feet. Most preferably, light **22** will be visible from distances of approximately 2000 yards. In one embodiment, wires putting light **22** in communication with target control module **30** are run inside of the pole **28** to facilitate a design that minimizes catching or snagging. Light **22** is configured to operate in any number of ways including via a pulse of variable length and frequency. Light **22** may pulse at a particular rate, including a particular length and frequency to indicate a shot and to distinguish the shot from another mode where the light is powered, such as via the remote control to power the target indication assembly **20** on, or to otherwise test the target indication assembly **20** or to wake the assembly from a standby mode.

Light **22** is preferably one that is encased in polycarbonate plastic and includes multiple LED lights providing variable flash patterns. The light **22** preferably runs off of 12-24 Direct Current Volts, drawing no more than 0.4 Amps. Preferably, the light has an operational temperature range from −22 degrees F. to +122 degrees F.

With reference now to FIG. **3**, impact detection module **14** is discussed in greater detail. Figure three is a schematic representation of impact detection module **14** and is not meant to be an exhaustive listing its inner working components. In general, impact detection module **14** will include a battery **60**, and impact sensor **62**, and a remote transmitter **64**. Preferably, the battery **60** is rechargeable. Impact detection module **14** is not meant to require a battery, just a suitable power source such as that which might be provided by a solar panel or by other means. In addition to having a battery **60**, or some other source of power, impact detection module **14** has an impact sensor **62** which is configured to send a signal to remote transmitter **64** when an impact occurs.

Impact sensor **62** can be designed to send an impact signal to remote transmitter **64** in a variety of ways. Preferably, the impact sensor **62** will be triggered to send a signal to remote transmitter **64** only upon a vibration of a sufficient minimum frequency that is indicative of an impact to the target assembly **10** from a round of ammunition. To this end, impact sensor **62** is preferably equipped with a mechanism to adjust its sensitivity, so that only genuine hits to the target assembly **10** are recorded. Alternatively, impact sensor **62** is configured to send a signal to remote transmitter **64** through the use of movement detection systems, micro reed switches, mercury switches, load switches or other ways of detecting movement on the impact surface of the target. In each case, the impact sensor **62** is preferably equipped with a sensitivity adjustment mechanism to set a minimum threshold value that may be used to avoid false positive signals. Preferably, the battery **60** used in impact detection module **14** is a 6 volt, rechargeable lithium-ion battery pack. Most preferably, the battery **60** is rechargeable via, for example, solar power.

With reference to FIG. **4**, target control module **30** is explained in greater detail. In general, target control module **30** includes a multi-channel receiver **32**, a battery **34**, a capacitor **36**, a potentiometer **38**, and an external charge port **42**. Target control module **30** includes a water-tight case **40**

made from injection-molded plastic or some similar material that may withstand elements and protect internal circuitry from damage. Multi-channel receiver may be configured to receive a variety of different signals. Preferably, multi-channel receiver receives RF signals from multiple sources.

Multichannel receiver **32** has at least two channels; however, in other embodiments, it can be configured to have twelve or more channels. For illustration purposes, multi-channel receiver **32** is configured with two channels, one for receiving signals from the impact detection module **14** and another for receiving signals from a remote control (depicted in FIG. **5**). Multichannel receiver **32** is encased in ABS reinforced plastic with a water-tight seal. Multichannel receiver **32** is also equipped with a hole sized to permit free passage or wires to and from the receiver body. Multichannel receiver **32** is preferably equipped with LED indicator lights to indicate that the unit is receiving power and that a signal is being received. Multichannel receiver is preferably one that can be customized through, among other things, the use of dual in-line switches. The switches can be used in coordination with an electrolytic capacitor **36** and a potentiometer **38** in order to create a variable timer for the output signal. As illustrated, the output signal is configured to create a longer signal pulse, which can send longer pulse signals to the light **22**, to increase the duration of the flash in order to permit the light **22** to be visible from long range. In general, a pulse that is longer in length is easier to see in unfavorable visibility conditions or over extremely long range, i.e., distances at or slightly over 2000 yards.

As illustrated, multichannel receiver **32**, working in conjunction with impact detection module **14** and remote control **70** (shown in FIG. **5**) creates two primary modes of operation for target control module **30**. The first mode of operation is one in which the light **22** is configured to be illuminated according to a flash pattern over a predefined time interval, preferably between one and three seconds. During the predefined time interval, the light **22** will flash or pulse depending on the desired flash pattern. For example, the light **22** may flash during the predefined time interval at a rate of 3 times per second. Alternatively, the output pulse over the predefined time period might keep the flashing light illuminated for a period of time from 0.3 seconds to as long as 2 seconds.

The length of the predefined time period set for multi-channel receiver **22** and the flash pattern for light **22** during that time period are meant to be completely adjustable and moreover, these may be set according to planned shooter training protocols where the shooter is meant to vary his response and engagement of the target depending on the signal sent from the target. For example, in a series of shooting exercises, the shooter may be trained to recognize a particular flash pattern that is meant to signify "friendly forces" and thereafter, the shooter is trained not to engage those targets which exhibit a particular flash pattern. Additionally, the shooter may be asked to engage targets in a particular order according to a preset series of flash patterns.

The second mode of operation for Target Control module **30** is one in which the light **22** is configured to be illuminated according to a desired flash pattern (or optionally constantly illuminated with no pulse or flashing) until the target assembly is hit. In this mode of operation the light **22** is signaled to be powered on by the shooter or from some other remote location. The target control module, via the multichannel receiver **32** thereby illuminates the light **22** according to the designated flash pattern and the light **22** will be turned completely off in the event the shooter successfully strikes the target. According to this mode of operation, the flash pattern can pulse the light **22** anywhere from 0.3 seconds to over 2 seconds.

In yet another embodiment, the target control module **30** may be configured to alternate modes of operation or flash patterns depending on the number of times the target is hit or depending on the particular part of the target that is hit. As explained in greater detail below, with respect to the multi-quadrant embodiment (discussed with reference to FIGS. **7-10**), a predefined flash pattern may indicate that a particular part of the target was hit. Alternatively, the constant flash pattern may be changed in response to a first hit, and then changed again in response to a second hit, and thereafter extinguished in response to a third hit.

Target control module **30** as illustrated is only configured to receive signals, however, the invention is not meant to be limited to such an embodiment. It is within the contemplation of the invention that target control module **30** be configured to send signals, both to the target assembly **10**, via impact detection module **14** or via some other communications device attached to the target assembly that is configured to receive signals. Moreover, target control module **30** may be configured to send signals to a remote location such as a remote computer that is programmed via software to control the target assembly, or multiple target assemblies in accordance with a certain shooter training regimen. Additionally, the target control module may be configured to receive signals from a remote location and then communicate those signals to the target assembly **10** via impact detection module **14**. For example, the target control module **30** may be configured to communicate to the impact detection module **14** in response to a remote signal, wherein the remote signal is one indicating movement for the target assembly **10** or indicating the creation of a particular heating apparatus to allow the target to be seen through night vision optical devices.

Multichannel receiver **32**, in addition to being in wired communication with antenna **26** (shown in FIG. **2**), preferably includes, for at least one channel, an enhanced internal antenna for wireless communication at ranges up to 200 yards. In addition, multichannel receiver preferably includes a programmable microprocessor that can be programmed to pulse the light **22** according to a series of several different flash patterns. Additionally, the microprocessor of multi-channel receiver **32** may be programmed to make the target control module automatically power on or power off in response to various signals or energy states, or to preserve battery life. The battery **34** of target control module **30** is preferably rechargeable and capable of delivering up to 12 volts of direct current at no more than 5 Amps. The battery **34** is rechargeable via external charge port **42**.

Turning now to FIG. **5**, a remote control **70** useable consistent with the principals of the present invention is hereby described in greater detail. Remote control **70** has a series of twelve buttons **72**, a water-resistant injection-molded plastic case **76**, and an external antenna **74**. Remote control **70** is preferably one that is capable of communication over long ranges, preferably more than 500 yards, and more preferably as long as about 2000 yards. Remote control **70** is preferably configurable to communicate with the target control module **30** using RF signals. The RF signals from remote control **70** are configurable over a variable range of frequency. Preferably, the frequencies over which the remote control **70** may communicate are 250 MHz to 450 MHz. Each of the 12 buttons **72** may be configured to communicate on a particular frequency and thereby distinguish between multiple receivers in the field. For example, the

remote control **70** may be configured such that the first button is configured to communicate with a first target assembly and a first target control module, such that the first button on remote control **70** is capable of testing the target assembly **10**, specifically, the impact detection module **14** and the target control module **30**. For example, in response to pressing the first button of remote control **70**, the first target assembly **10** and the first target indication assembly **20** will be illuminated to indicate that the target is ready to be engaged.

The remote control **70** preferably is powered via a 9-volt battery and it preferably includes a telescoping antenna. Additionally, remote control **70** operates at a range of 15-40 mA and output power of about 3-15 mW.

With reference now to FIG. **6**, a schematic representation of an interactive long range target shooting system constructed in accordance with principles of the present invention is shown. Interactive long range target shooting system **100** is illustrated using four targets. One of ordinary skill in the art will understand that the number of targets designated in the field is up to the shooter or to the training regimen. The number of targets depicted is therefore not intended to be limiting in any way. As depicted, there is a shooter **102**, a first target assembly **104**, a second target assembly **106**, a third target assembly **108**, and a fourth target assembly **110**. The shooter **102** preferably has direct lines of sight, **112**, **114**, **116**, and **118** to the target assemblies, **102**, **104**, **106** and **108**. In the schematic representation, it appears that each target assembly is at about the same distance away from the shooter **102**, but this is purely for illustration. In reality, each target assembly can be at a different distance away from the shooter **102** or they can be at the same distance. Moreover, each target assembly, **104**, **106**, **108**, and **110**, may also be mounted to tracks or other means for movement, such that they are able to be moved at varying distances away from the shooter to increase the difficulty in the training exercise.

As depicted in FIG. **6**, a computer **140** may be used and may be programmed to be in communication with each target assembly, **104**, **106**, **108**, and **110**. The computer **140** may be in communication via the target control modules, **126**, **128**, **130**, and **132**. The computer program can be set to a predefined training regimen, designed to have the shooter engage different targets. The computer may also alter the flash patterns of the lights **120**, **122**, **123**, and **124**, to correspond with different training conditions that the shooter **102** must respond to in real time. Moreover, the remote control **150** may also be used from a remote location, in communication with the computer to carry out any number of pre-programmed target training exercises.

With reference now to FIGS. **7-8**, an additional embodiment for the target assembly is disclosed. FIG. **7** discloses a frame **170** for a multi-quadrant target assembly. The Frame **160** is constructed from highly durable materials, such as R5400 steel or HARDOX500 steel. The frame **170** includes switch holes **172** that are placed optionally at the corner of each frame area. The frame **170** includes a head frame area **176**, an upper frame area **180**, and a lower frame area **182**. The size and dimensions of frame **170** are variable, of course, depending on the desired shape of the target assembly.

FIG. **8** discloses the panel assembly constructed in accordance with principles of the invention. FIG. **8** includes an outer body panel **186**, an inner body panel **188**, and a head panel **184**. Each of the panels of the multi-quadrant assembly is intended to record a hit to that individual panel through switches that will be triggered upon the depression of the panel in the direction of impact. The impact surface of each panel is steel plated, preferably made from AR Hardox R600, R500, or similarly durable material.

FIG. **9** shows a side view of a panel for the multi-quadrant target assembly constructed in accordance with the present invention. FIG. **9** shows upper bolt dowels **190** and lower bolt dowels **192**. The upper and lower bolt dowels (four total) are threaded and configured to each receive a nut **196**. The nut **196** is used to secure the panel to the frame **170**, whereby the dowels **190** are inserted into switch dowel holes **172**. A nut **196** is used to secure the several dowels **190** to the frame **170** and a spring **194** is used to absorb shock and vibration that can be experienced when the panel is struck by a round of ammunition.

FIG. **10** shows a hit indication assembly **200** for an interactive multi-quadrant target. The hit indication assembly **200** includes a first light **202**, a second light **204**, and third light **206**. Each light, **202**, **204**, and **206** can be LED lights of the same general construction and power demand as the light **22** (shown in FIG. **2**) with the exception being that these lights, **202**, **204**, and **206**, are preferably of different colors. In this embodiment, the first light **202** is preferably an amber light, which indicates a strike to the inner body panel **188**. The second light **204** can be a blue light that indicates a strike to the outer body panel **186**. Finally the third light **206** is preferably a red light indicating a strike to the head panel **184**.

FIG. **10** also shows other parts of the target indication assembly **200** including the pole **210** and the target control module **208**. The target control module **208** can be configured to receive signals in the same way as discussed above with respect to target control module **30** (depicted in FIG. **4**). Additionally, the multi-quadrant target assembly can also be equipped with an impact detection module that is in wired or wireless communication with the panels **188**, **186**, and **184**, and the target control module **208**. The impact detection module useable with the multi-quadrant target assembly can be constructed the same way as discussed with respect to the impact detection module **14** (depicted in FIG. **3**).

While the preferred embodiment of the invention has been illustrated and described, as noted above, many changes can be made without departing from the spirit and scope of the invention. Accordingly, the scope of the invention is not limited by the disclosure of the preferred embodiment. Instead, the invention should be determined entirely by reference to the claims that follow.

The embodiments of the invention in which an exclusive property or privilege is claimed are defined as follows:

1. An interactive target for long range shooting comprising:

a target assembly wherein the target assembly includes an impact surface;

an impact detection module, wherein the impact detection module includes an impact sensor, a remote transmitter, and a battery;

a light;

a target control module, wherein the target control module includes a multi-channel receiver, a battery, a capacitor, and a potentiometer;

wherein the impact detection module is configured to detect a strike from a round of ammunition coming into contact with the impact surface;

wherein the light is wired to the target control module and where the target control module is configured to receive a wireless signal from the impact detection module; and

wherein the light is illuminated in response to the strike to the impact surface of the round of ammunition.

2. The interactive target of claim **1** wherein the target includes a hinge.

3. The interactive target of claim **1** wherein the light when illuminated is visible from distances of at least 500 yards.

4. The interactive target of claim **1** wherein the light is configured to flash according to a variety of flash patterns.

5. The interactive target of claim **1** wherein the impact surface comprises a plurality of plates.

6. The interactive target of claim **5** wherein said plurality of plates is connected to a plurality of switches, wherein said plurality of switches is configured to detect a strike to said plurality of plates.

7. The interactive target of claim **6** wherein the plurality of switches is configured to send signals to said target control module, and thereby illuminate the light.

8. An interactive target for long range shooting, the interactive target comprising: a target assembly with an impact surface, the target assembly further including a target control module and a light; wherein the target control module is wired to the light; wherein the target control module has a multi-channel receiver configured to receive signals from a plurality of remote devices; and wherein the plurality of remote devices includes a remote control.

9. The interactive target of claim **8** wherein the plurality of remote devices includes a computer.

10. The interactive target of claim **8** wherein the plurality of remote devices includes an impact detection module.

11. A system for long range shooting comprising:

a plurality of targets;

a plurality of impact detection modules;

a plurality of target control modules;

a plurality of lights;

a computer programmed to identify at least one of said plurality of targets according to a predefined flash pattern;

wherein the plurality of targets are moveable in response to signals received by the plurality of target control modules.

12. The system for long range shooting of claim **11** wherein the computer is programmed to send signals to the plurality of target control modules.

13. The system for long range shooting of claim **11** wherein the plurality of lights are visible at distances greater than 500 yards.

14. The system for long range shooting of claim **11** wherein the computer is configured to send wireless signals to the plurality of target control modules and the plurality of impact detection modules.

* * * * *