US009312142B2

(12) **United States Patent**
Kramer

(10) **Patent No.: US 9,312,142 B2**
(45) **Date of Patent: Apr. 12, 2016**

(54) **CHEMICAL MECHANICAL POLISHING METHOD AND APPARATUS**

(71) Applicant: **GLOBALFOUNDRIES Inc.**, Grand Cayman (KY)

(72) Inventor: **Jens Kramer**, Dresden (DE)

(73) Assignee: **GLOBALFOUNDRIES INC.**, Grand Cayman (KY)

(*) Notice: Subject to any disclaimer, the term of this patent is extended or adjusted under 35 U.S.C. 154(b) by 0 days.

(21) Appl. No.: **14/300,705**

(22) Filed: **Jun. 10, 2014**

(65) **Prior Publication Data**

US 2015/0357199 A1 Dec. 10, 2015

(51) **Int. Cl.**

H01L 21/306	(2006.01)
B24B 53/017	(2012.01)
H01L 21/67	(2006.01)

(52) **U.S. Cl.**

CPC ***H01L 21/30625*** (2013.01); ***B24B 53/017*** (2013.01); ***H01L 21/67075*** (2013.01); ***H01L 21/67092*** (2013.01)

(58) **Field of Classification Search**

CPC H01L 21/30625; H01L 21/67075

See application file for complete search history.

(56) **References Cited**

U.S. PATENT DOCUMENTS

5,823,854	A	10/1998	Chen	
5,913,713	A	6/1999	Cheek et al.	
6,332,832	B1	12/2001	Suzuki	
2002/0106971	A1	8/2002	Rodriquez et al.	
2005/0186891	A1 *	8/2005	Benner	B24B 53/017 451/56
2006/0270237	A1	11/2006	Chuang et al.	
2012/0220195	A1	8/2012	Gawase et al.	
2014/0273763	A1 *	9/2014	Lee	B24B 53/003 451/56

FOREIGN PATENT DOCUMENTS

DE 10324429 B4 8/2010

OTHER PUBLICATIONS

Araca, Inc.,"Slurry Injector System (SIS) by Araca, Inc.", 2 pages.

* cited by examiner

Primary Examiner — Duy Deo
Assistant Examiner — Mahmoud Dahimene
(74) *Attorney, Agent, or Firm* — Ditthavong & Steiner, P.C.

(57) **ABSTRACT**

Methods for polishing a semiconductor wafer using a pad resurfacing arm and an apparatus therefor are disclosed. Embodiments may include providing a semiconductor wafer on a chemical mechanical polishing (CMP) tool, the CMP tool including a polish pad and a pad resurfacing arm which includes a pad cleaning part, a pad conditioning part, and a slurry dispensing part, dispensing a slurry to the polish pad utilizing the pad resurfacing arm, and polishing the semiconductor wafer utilizing the polish pad.

8 Claims, 5 Drawing Sheets

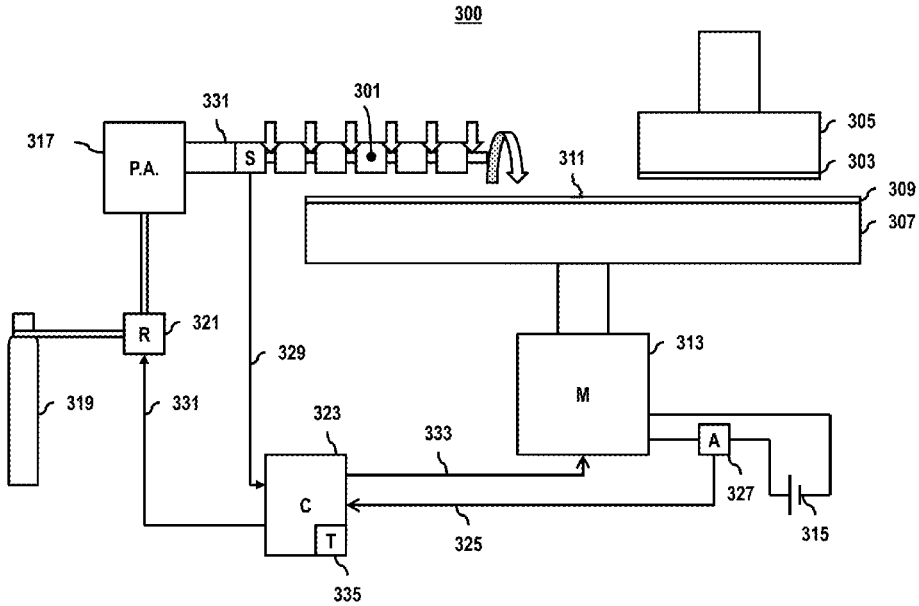

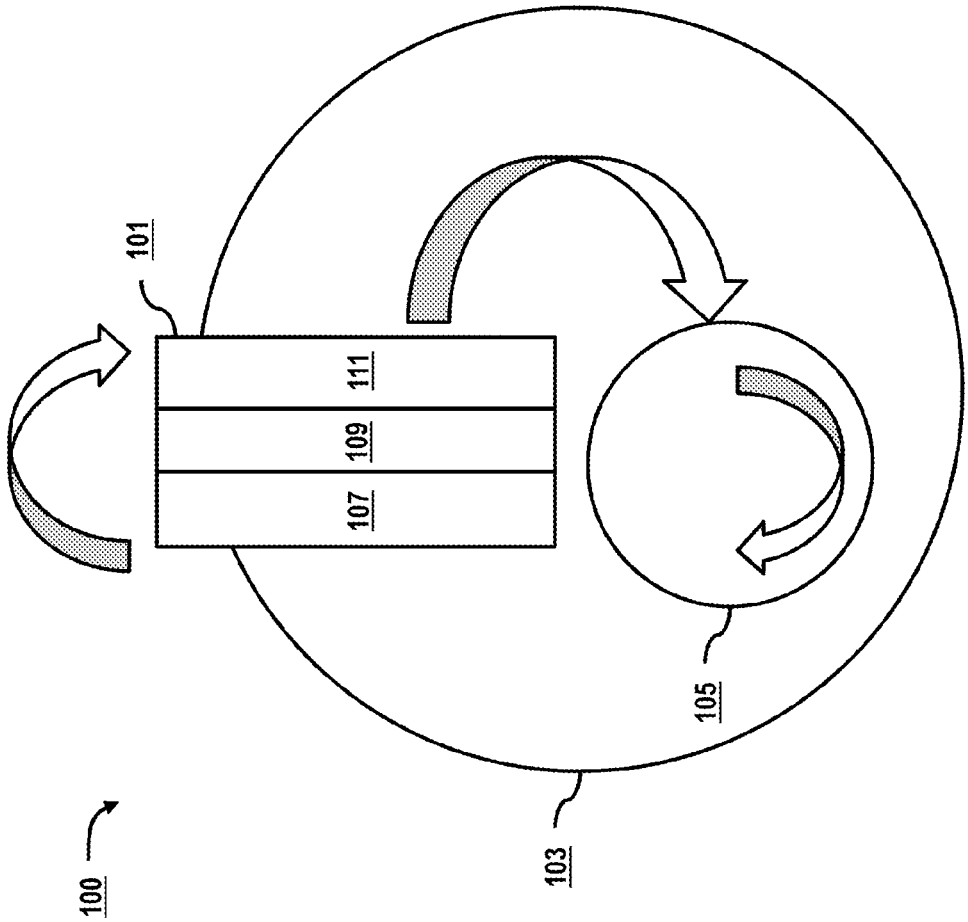

FIG. 1

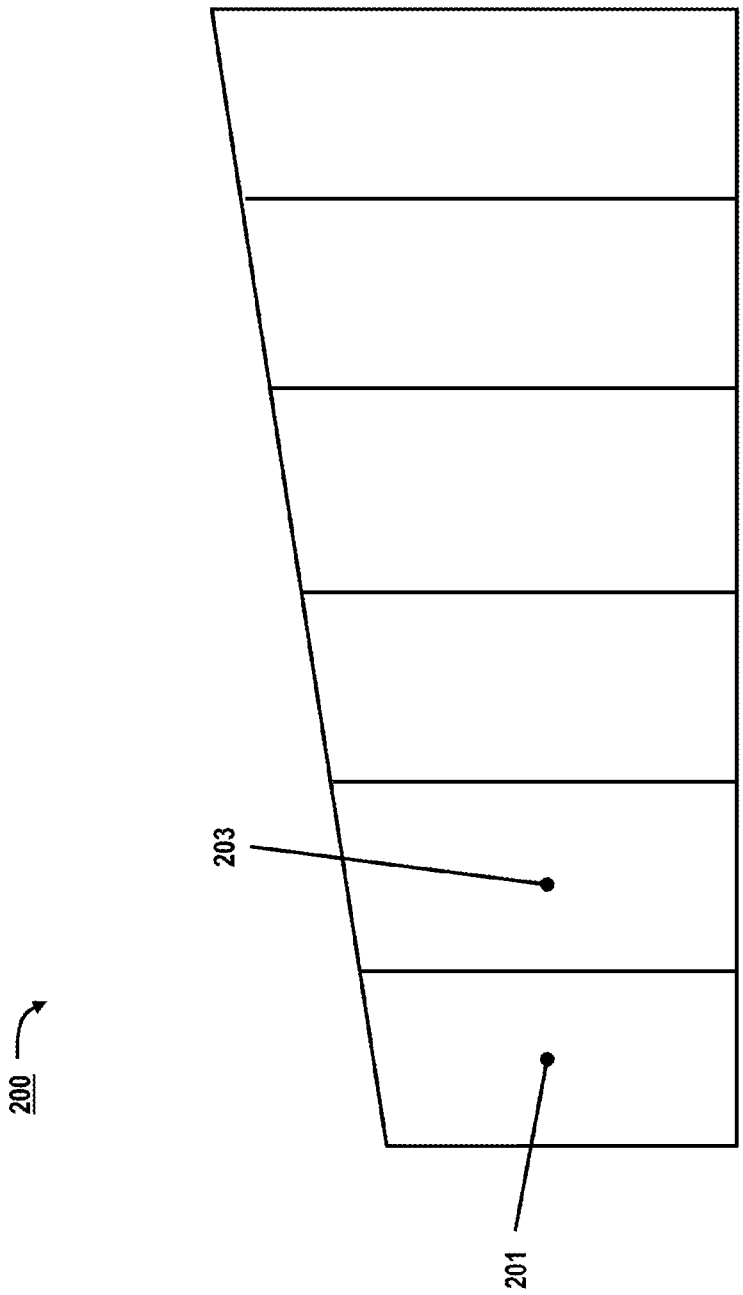

FIG. 2

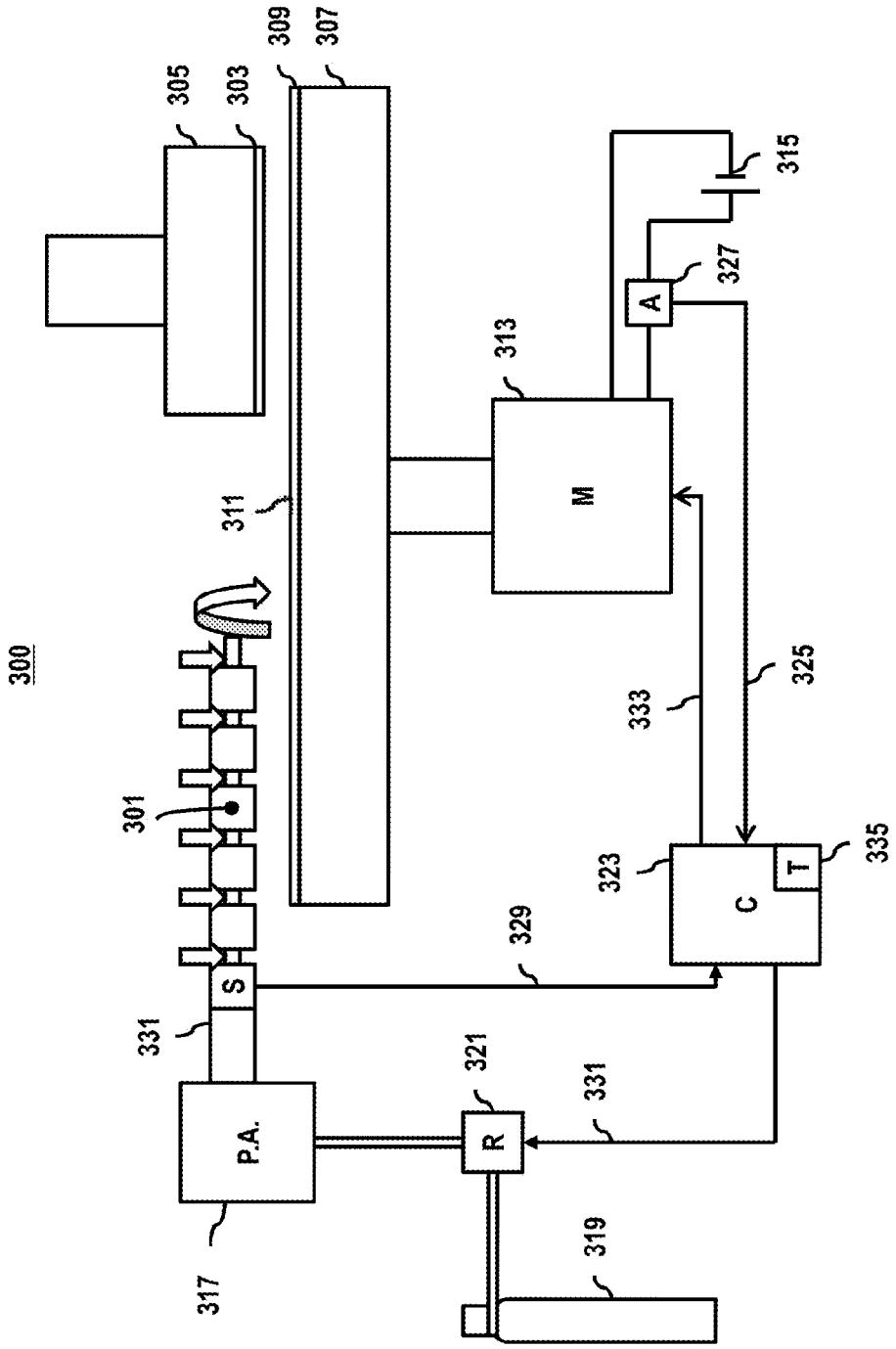
300
301
303
305
307
309
311
313
315
317
319
321
323
325
327
329
331
333
335
M
A
C
T
S
P.A.
R

FIG. 3

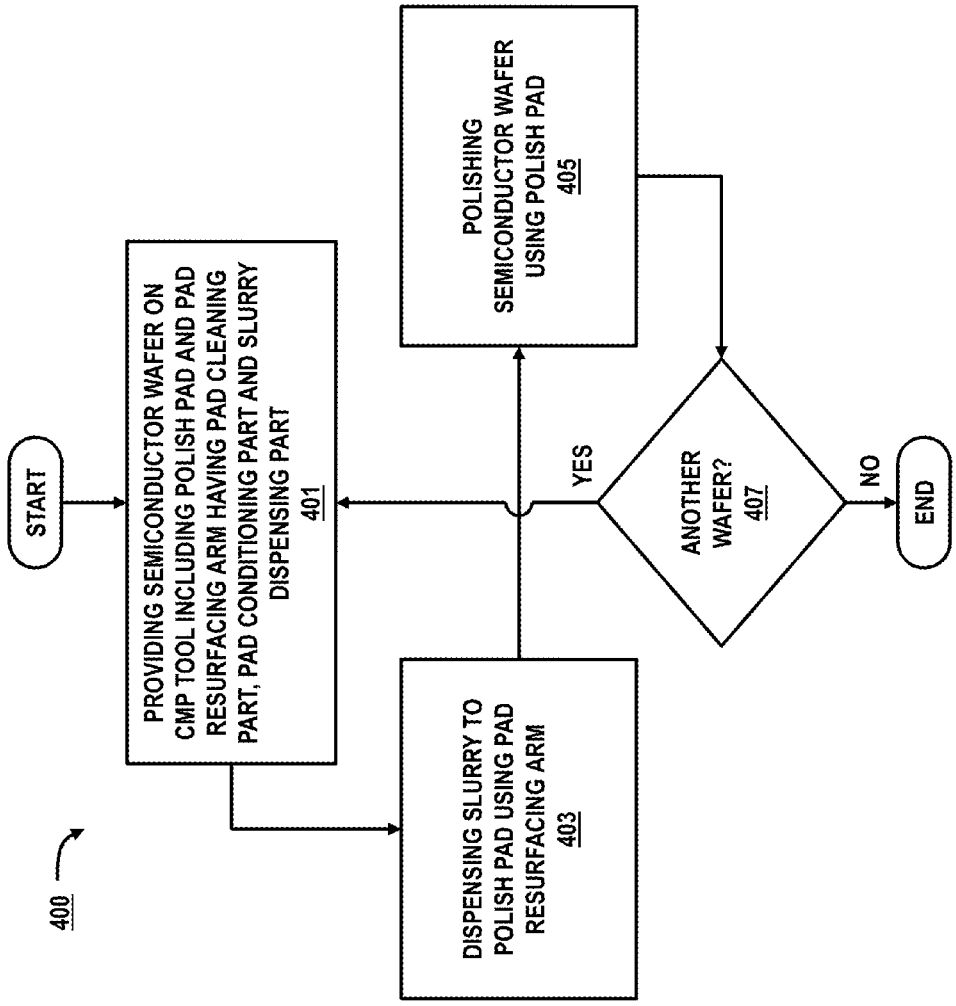
400
START
PROVIDING SEMICONDUCTOR WAFER ON CMP TOOL INCLUDING POLISH PAD AND PAD RESURFACING ARM HAVING PAD CLEANING PART, PAD CONDITIONING PART AND SLURRY DISPENSING PART
401
DISPENSING SLURRY TO POLISH PAD USING PAD RESURFACING ARM
403
POLISHING SEMICONDUCTOR WAFER USING POLISH PAD
405
ANOTHER WAFER?
407
YES
NO
END

FIG. 4

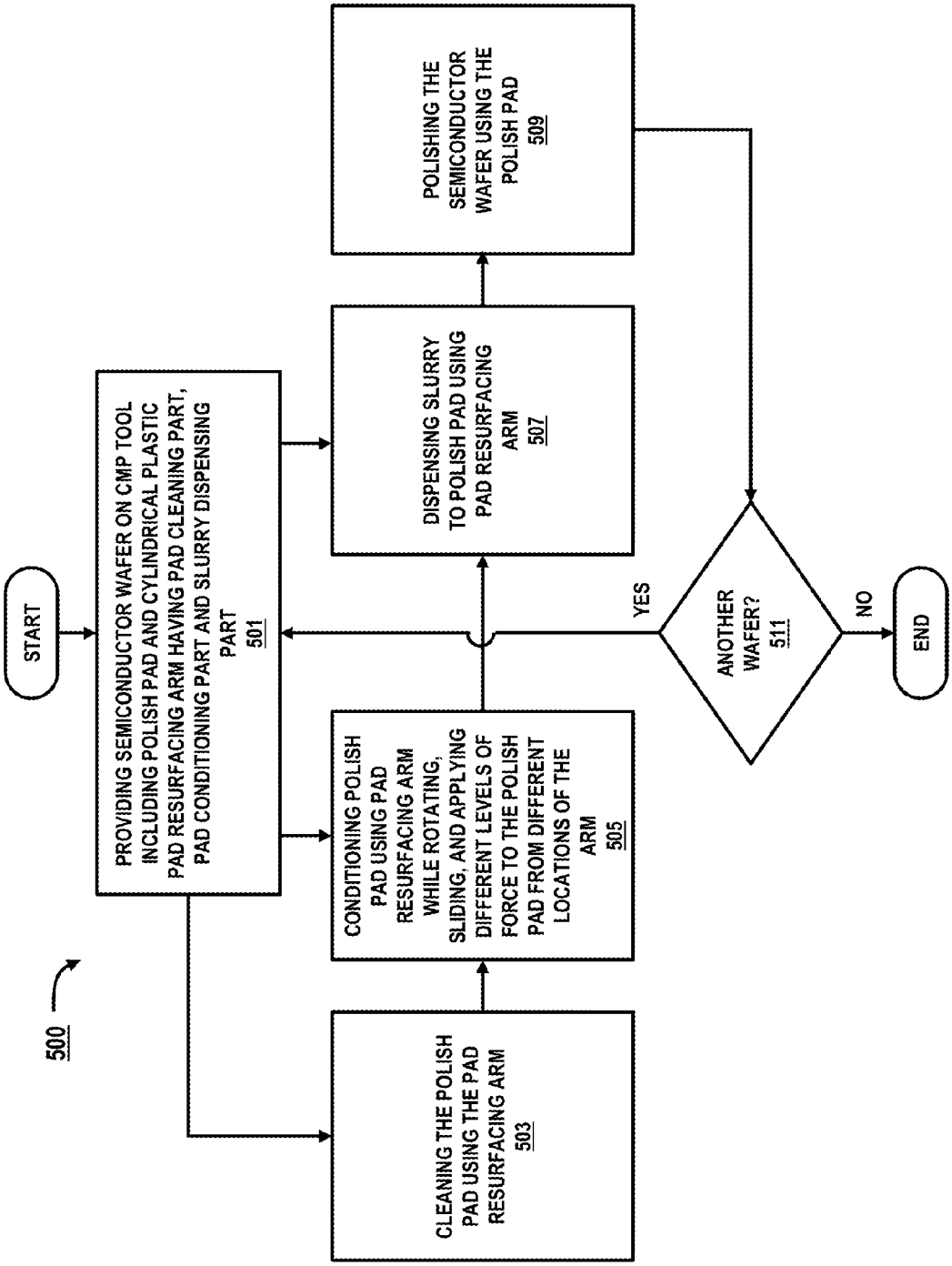
500
START
PROVIDING SEMICONDUCTOR WAFER ON CMP TOOL INCLUDING POLISH PAD AND CYLINDRICAL PLASTIC PAD RESURFACING ARM HAVING PAD CLEANING PART, PAD CONDITIONING PART AND SLURRY DISPENSING PART
501
CLEANING THE POLISH PAD USING THE PAD RESURFACING ARM
503
CONDITIONING POLISH PAD USING PAD RESURFACING ARM WHILE ROTATING, SLIDING, AND APPLYING DIFFERENT LEVELS OF FORCE TO THE POLISH PAD FROM DIFFERENT LOCATIONS OF THE ARM
505
DISPENSING SLURRY TO POLISH PAD USING PAD RESURFACING ARM
507
POLISHING THE SEMICONDUCTOR WAFER USING THE POLISH PAD
509
ANOTHER WAFER?
511
YES
NO
END

FIG. 5

CHEMICAL MECHANICAL POLISHING METHOD AND APPARATUS

TECHNICAL FIELD

The present disclosure relates to chemical mechanical polishing (CMP) of semiconductor wafers utilizing a polish pad. The present disclosure is particularly applicable to preparing and/or resurfacing polish pads utilized in CMP of semiconductor wafers for the 22 nanometer (nm) technology node and beyond.

BACKGROUND

CMP is often utilized for planarizing semiconductor wafer surfaces in the fabrication of integrated circuits. Such CMP processes typically involve rubbing the surface of the wafer against a polishing device to remove high spots on the wafer surface. The wafer is held in a stationary or rotating fixture while being pressed against a stationary or rotating polishing pad. Generally, at least one of the pad and the arm are moving with respect to each other to create friction between the pad and wafer for polishing the wafer. The polishing pad is supported on a platen which may be rotated during the CMP process. The polishing surface of the polishing pad may be constructed from a variety of materials, such as open-cell foam polyurethane or a sheet of polyurethane with a grooved surface. The polishing surface is relatively rough in comparison to the semiconductor wafer surface. A slurry of polishing fluid is often introduced to further aid in the CMP process.

The surface of the polishing pad gradually becomes glazed due to the accumulation of material removed during the polishing process. Accordingly, the pad must be periodically conditioned to restore its rough surface texture. Such conditioning involves the application of an abrasive surface of a conditioning device against the surface of the polishing pad to remove the accumulated debris, and it may remove a portion of the polishing pad surface itself. Conditioning will expose a renewed polishing pad surface having characteristics essentially the same as or similar to a new pad. Commonly, a polishing pad is conditioned after each semiconductor wafer is polished.

Several types of conditioning devices are known in the art, for example a conditioning disk having a diamond abrasive surface formed thereon. The abrasive surface is rubbed against the polishing pad surface at a predetermined velocity, for a predetermined length of time, with a predetermined amount of force exerted between. The abrasive diamond surface functions to condition or roughen the surface of the polishing pad. The amount of conditioning may be varied by changing the velocity, time of contact, or force between the conditioning device and the polishing pad. For instance, the amount of conditioning will increase with an increased velocity, a lengthened time period, or an increased force between the two surfaces.

Too much or too little conditioning will provide undesirable results. CMP specifications are tightening as the semiconductor industry progresses to manufacturing semiconductor wafers at smaller technology nodes, such as 22 nm and 14 nm nodes. Polish pad resurfacing and preparation processes, such as slurry distribution, are being developed for manufacturing at smaller technology nodes and 450 mm wafers. Controlled conditioning of a polish pad in CMP is commonly utilized to create more consistent polish conditions throughout a CMP usability lifetime of a polish pad.

Current polish pad resurfacing and preparation processes have several limitations and drawbacks. One limitation is that

a polish pad is often not prepared and/or resurfaced consistently over the whole surface of the pad. For example, a polish pad is often conditioned utilizing a rotating conditioning disc on a conditioning arm moving at differential sweeping motions and speeds to resurface the polish pad. The sweep speed is often zero at points where the sweeping motion is reversed. Alternatively, it may be elevated at other locations of a sweeping motion, such as at a periphery of a "donut" hole at the center of an orbital sweeping motion. The differential sweeping motions and speeds commonly result in differential removal rates of the unconditioned pad at turning points of the sweeping motion and at areas of the pad conditioned at higher sweeping speeds.

Another limitation is that conditioning arms currently utilized in polish pad resurfacing and preparation processes often do not provide for control or measurement of dynamic or differential downward forces applied to the polish pad through the arms. Instead, downward forces that are unitary and static in nature are commonly applied through the arms via a pneumatic system. Often the unitary static downward forces applied through the arms are difficult to measure, such as by utilizing a load cell.

Another limitation is that arms currently utilized in polish pad resurfacing and preparation processes, such as a conditioning arm, are often mechanically unstable due to the high wearing out of bearings and other mechanical parts associated with moving the arms. Another limitation is that separate mechanical parts are required for pad conditioning and pad cleaning. A conditioning arm generally has no cleaning capability for cleaning a polish pad. Similarly, a cleaning arm or other means for cleaning a polish pad, such as an atomizer, generally has no pad conditioning capability.

A need therefore exists for methodology enabling (1) consistent preparation and/or resurfacing over a whole surface of a polish pad in a CMP tool, (2) control and/or measurement of dynamic and/or differential downward forces applied to a polish pad in a CMP tool, (3) mechanical stability regarding mechanical parts utilized in a CMP tool and (4) a reduction in the number of separate mechanical parts in a CMP tool utilized for preparing and/or resurfacing a polish pad in a CMP process, and an apparatus therefore.

SUMMARY

An aspect of the present disclosure includes a method including providing a pad resurfacing arm including a pad cleaning part, a pad conditioning part, and a slurry dispensing part.

Another aspect of the present disclosure includes an apparatus including a pad resurfacing arm including a pad cleaning part, a pad conditioning part, and a slurry dispensing part.

Additional aspects and other features of the present disclosure will be set forth in the description which follows and, in part, may be apparent to those having ordinary skill in the art upon examination of the following or may be learned from the practice of the present disclosure. Advantages of the present disclosure may be realized and obtained as particularly pointed out in the appended claims.

According to the present disclosure, some technical effects may be achieved, in part, by a method including providing a semiconductor wafer on a CMP tool, the CMP tool including a polish pad, and a pad resurfacing arm. Another aspect includes a pad cleaning part, a pad conditioning part, and a slurry dispensing part in a method, the method further including dispensing slurry to the polish pad utilizing the pad resurfacing arm, and polishing the semiconductor wafer utilizing the polish pad.

Another aspect includes conditioning the polish pad, utilizing the pad resurfacing arm. Yet another aspect includes cleaning the polish pad, utilizing the pad resurfacing arm. Other aspects include conditioning the polish pad, utilizing the pad resurfacing arm, and cleaning the polish pad, utilizing the pad resurfacing arm. A further aspect includes utilizing the pad resurfacing arm by rotating the pad resurfacing arm. An additional aspect includes the pad resurfacing arm being cylindrical. Yet another aspect includes the pad resurfacing arm being conical. Still another aspect includes utilizing the pad resurfacing arm by sliding the pad resurfacing arm on the polish pad. A further aspect includes the pad resurfacing arm including guides of a plastic material. An additional aspect includes utilizing the pad resurfacing arm by applying different levels of force to the polish pad from different locations of the pad resurfacing arm.

Another aspect of the present disclosure includes an apparatus including a CMP tool, the CMP tool including a polish pad and a pad resurfacing arm, which includes a pad cleaning part, a pad conditioning part, and a slurry dispensing part.

Another aspect includes the CMP tool being configured to rotate the pad resurfacing arm. Yet another aspect includes the CMP tool being configured to sweep the pad resurfacing arm over the polish pad. Still another aspect includes the apparatus including a flatness monitoring arm. An additional aspect includes the pad resurfacing arm being cylindrical. Yet another aspect includes the pad resurfacing arm being conical. A further aspect includes the CMP tool being configured to slide the pad resurfacing arm on the polish pad. Another aspect includes the pad resurfacing arm including guides of a plastic material. Yet another aspect includes the CMP tool being configured to apply different levels of force to the polish pad from different locations of the pad resurfacing arm. A further aspect includes the CMP tool being configured to rotate the pad resurfacing arm on the polish pad. Yet another aspect includes the CMP tool being configured to rotate the pad resurfacing arm, vertically, on the polish pad.

Additional aspects and technical effects of the present disclosure will become readily apparent to those skilled in the art from the following detailed description wherein embodiments of the present disclosure are described simply by way of illustration of the best mode contemplated to carry out the present disclosure. As will be realized, the present disclosure is capable of other and different embodiments, and its several details are capable of modifications in various obvious respects, all without departing from the present disclosure. Accordingly, the drawings and description are to be regarded as illustrative in nature, and not as restrictive.

BRIEF DESCRIPTION OF THE DRAWINGS

The present disclosure is illustrated by way of example, and not by way of limitation, in the figures of the accompanying drawing and in which like reference numerals refer to similar elements and in which:

FIG. **1** schematically illustrates a top view of a CMP tool, in accordance with an exemplary embodiment;

FIG. **2** schematically illustrates a side view of a pad resurfacing arm, in accordance with an exemplary embodiment;

FIG. **3** schematically illustrates a side view of a CMP tool, in accordance with an exemplary embodiment;

FIG. **4** schematically illustrates a process flow for polishing a semiconductor wafer, in accordance with an exemplary embodiment; and

FIG. **5** schematically illustrates a process flow for polishing a semiconductor wafer, in accordance with an exemplary embodiment.

DETAILED DESCRIPTION

In the following description, for the purposes of explanation, numerous specific details are set forth in order to provide a thorough understanding of exemplary embodiments. It should be apparent, however, that exemplary embodiments may be practiced without these specific details or with an equivalent arrangement. In other instances, well-known structures and devices are shown in block diagram form in order to avoid unnecessarily obscuring exemplary embodiments. In addition, unless otherwise indicated, all numbers expressing quantities, ratios, and numerical properties of ingredients, reaction conditions, and so forth used in the specification and claims are to be understood as being modified in all instances by the term "about."

The present disclosure addresses and solves the current problem(s) of (1) inconsistent preparation and/or resurfacing over a whole surface of a polish pad in a CMP tool, (2) lack of control and/or measurement of dynamic and/or differential downward forces applied to a polish pad in a CMP tool, (3) mechanical instability regarding mechanical parts utilized in a CMP tool and (4) a large number of mechanical parts in a CMP tool utilized for preparing and/or resurfacing a polish pad in a CMP process. In accordance with embodiments of the present disclosure, a process uses a CMP tool including a polish pad and a pad resurfacing arm, the pad resurfacing arm including a pad cleaning part, a pad conditioning part, and a slurry dispensing part.

Methodology in accordance with embodiments of the present disclosure may include providing a semiconductor wafer on a CMP tool, the CMP tool including a polish pad, and a pad resurfacing arm including a pad cleaning part, a pad conditioning part, and a slurry dispensing part. A slurry is dispensed to the polish pad utilizing the pad resurfacing arm. Then, the semiconductor wafer is polished utilizing the polish pad.

Still other aspects, features, and technical effects will be readily apparent to those skilled in the art from the following detailed description, wherein preferred embodiments are shown and described, simply by way of illustration of the best mode contemplated. The disclosure is capable of other and different embodiments, and its several details are capable of modifications in various obvious respects. Accordingly, the drawings and description are to be regarded as illustrative in nature, and not as restrictive.

Adverting to FIG. **1**, in accordance with an exemplary embodiment, a top-down view of a CMP tool **100** is illustrated including a pad resurfacing arm **101** on a polish pad **103** resting upon a platen (not shown) below the polish pad **103**. The CMP tool **100** also includes a wafer holder **105**, which may be rotating or stationary (illustrated as rotating), holding a semiconductor wafer below (not shown) in contact with polish pad **103**, which may be rotating or stationary, under the semiconductor wafer. The pad resurfacing arm **101** is movable or stationary over the polish pad **103**. In general, at least one of the pad **103** and the arm **101** are moving with respect to each other to generate friction between the pad **103** and a wafer. As depicted in FIG. **1**, the length of arm **101** extends from the outer periphery of polish pad **103** and across the center of the polish pad **103**. The arm **101** may slide and rotate in such a manner that the whole surface of the polish pad **103** is cleaned, conditioned or dispensed slurry by the arm **101**.

The arm **101** may rotate in place, or slide in different directions over the polish pad **103**, such as in an arc movement or an orbital movement over a partial or a whole surface of the polish pad **103**. The pad resurfacing arm **101** may be constructed of various materials, such as metal (e.g., aluminum), metal alloy (e.g., steel) and may include guides, for sliding on the polish pad **103**, made with a lightweight material, such as a plastic material (e.g., thermoplastic polymers such as polyether ether ketone (i.e., PEEK), poly-p-phenylene sulfide (i.e. PPS), and silicon carbide (i.e., SiC)). The pad resurfacing arm **101** may utilize a variety of structural variations and may be, for example, cylindrical and/or conical, or in a box structure in the CMP tool **100** covering partially or fully a surface of the polish pad **103**.

The pad resurfacing arm **101** includes a pad cleaning part **107**, such as an atomizer or a spray nozzle for delivering a cleaning fluid under high pressure, such as distilled or ultra-purified water treated with nitrogen gas, to the polish pad **103**. The pad resurfacing arm **101** also includes a pad conditioning part **109**, which may be made from hard materials such as diamond or silicon carbide peaks to form an abrasive surface which may include, for example, a rotating or oscillating surface of the arm **101**, an internal disc or other mechanism for applying motion to the abrasive surface of pad conditioning part **109** with respect to the polish pad **103**. The pad resurfacing arm **101** also includes a slurry dispensing part **111** for dispensing polishing slurry to the polish pad for polishing the semiconductor wafer. The slurry dispensing part **111** includes one or more slurry outlets, for example five outlets, for dispensing slurry to the polish pad. The outlets may be fixed or movable on the slurry dispensing part **111**.

Adverting to FIG. **2**, in accordance with an exemplary embodiment, a side view of a pad resurfacing arm **200** is illustrated. The pad resurfacing arm **200** is conical in shape and includes different locations, such as location **201** and **203** through which different levels of force may be applied to a polish pad for purposes such as conditioning and/or cleaning. The local forces may be controlled using local implementation of the force, such as by a load cell for each location on the arm utilizing a strain gauge attuned for each load cell. The load cells or other implementation may utilize a variety of power sources, including, but not limited to, magnetic levitation, an electric motor, pneumatic pressure, and mechanical drives.

Adverting to FIG. **3**, in accordance with an exemplary embodiment, a CMP tool **300** includes a pad resurfacing arm **301** that may be, for example, cylindrical in shape. FIG. **3** illustrates the whole arm **301** rotating, but with differential downward forces as depicted by the separate downward arrows at different locations of the arm. A semiconductor wafer **303** may be held in a wafer holder **305** (stationary or rotating) which may be moved against or into contact with a platen **307** covered with a polishing pad **309**. The platen **307** may be rotated by a motor **313** connected to a power supply **315**. The polish pad surface **311** of the polishing pad **309** receives a slurry dispensed from the pad resurfacing arm **301** for polishing the semiconductor wafer **303**. Also, at least periodically, the pad resurfacing arm cleans debris from the polish pad surface **311**, such as by spraying or atomizing the polish pad surface **311** with a cleaning fluid, and/or conditions the polish pad **309** to retain a desired level of roughness in the polish pad surface **311**. To accomplish the dispensing of slurry, conditioning, and cleaning, the pad resurfacing arm **101** includes a part for each of these functions such as described above with respect to FIG. **1**.

Pad resurfacing arm **301** is illustrated schematically as being connected to a pneumatic actuator **317** for providing horizontal and vertical movement of the arm **301**, as well as for providing a selected amount of force between the arm **301** and the polishing pad surface **311** during, for example, a conditioning operation. Pneumatic actuator **317** may be powered by a source of compressed gas **319** controlled by regulator **321**. The resurfacing arm **301** may alternatively include a device powered by magnetic levitation, an electric motor, and other mechanical drives for arm **301**, which may have one or more separately rotatable abrasive surfaces, an abrasive surface formed on a conditioning wheel, or other such variations as may be known in the art.

It is known that the conditioning performance of the resurfacing arm **301** is a function of the relative velocity between an abrasive surface on the arm **301** and the surface **311** of the polishing pad **309**. It is also known that the conditioning performance is a function of the compressive force between these two surfaces, and a function of the length of time that the two surfaces remain in contact. Furthermore, the conditioning performance is a function of the roughness of the abrasive surface on the arm **301**. The conditioning performance will increase as the velocity between the surfaces is increased, as the compressive force between the surfaces is increased, and as the length of time of contact between the surfaces is increased.

The CMP tool **300** with the pad resurfacing arm **301** of FIG. **3** includes a controller **323** adapted to control the cleaning, conditioning, and dispensing of slurry in a manner sufficient to provide for these functions over a desired area of the polish pad surface **311**. Controller **323** may be a microprocessor or any sort of electromechanical device known in the art for controlling a process. Controller **323** receives as an input a signal **325** from an ampere meter **327** associated with the power supply **315** and motor **313**. Ampere meter **327** is adapted to measure the power being supplied to motor **313** and to produce a corresponding signal **325**. Motor **313** may be powered by another energy source, such as a pneumatic motor powered by compressed gas, in which case an appropriate equivalent sensor may be provided in lieu of ampere meter **327** for measuring the power or rate of energy delivery to such motor.

In addition to signal **325**, or as an alternative thereto, controller **323** may receive one or more input signals **329** from one or more strain gauges **331** attached to resurfacing arm **301** or other structure connected to the resurfacing arm **301**. The one or more strain gauges **331** are adapted to measure the deflections of arm **301** at different locations in the arm caused by the friction forces generated between the one or more locations of arm **301** and polish pad surface **311**. Both signals **325**, **329** correspond in magnitude to the friction forces generated between the polish pad surface **311** and locations of the resurfacing arm **301**. As a friction force increases, the amount of deflection at a location of arm **301** increases, as well as the amount of power that must be supplied to motor **313** in order to maintain a selected rotation or other movement speed of arm **301** on polish pad **309**. Accordingly, as the conditioning performance of the resurfacing arm **301** changes as a result of uses of an abrasive surface of the resurfacing arm **301** or other conditions of polish pad **309**, such as a need for cleaning a corresponding change in signals **325**, **329** is realized.

In order to modify the conditioning, slurry dispensing, and/or cleaning to account for a change in the polish pad surface **311**, such as slurry buildup, or conditioning needed in a specific area of the polish pad surface **311**, controller **323** may be programmed to provide signals necessary to control one or more variables, such as the velocity and/or rotational movement between polish pad surface **311** and resurfacing arm **301**, the selected movement direction(s), the length of

time of the cleaning, conditioning and/or slurry dispensing operations, and the compressive force between the polish pad surface **311** and the resurfacing arm **301**. To accomplish such control, controller **323** may generate a control signal **331** connected to regulator **321** to control the amount of down force applied between the resurfacing arm **301** and the polishing pad **309** by pneumatic actuator **317**. Controller **323** may also or alternatively provide a control signal **333** connected to motor **313** to control the speed of operation of motor **313**. Furthermore, controller **323** may include an internal or external timer **335** associated with output signals **331**, **333** for controlling the duration of conditioning, cleaning and slurry dispensing operations by the resurfacing arm **301**, for example in response to signals from a conventional flatness monitoring arm (not shown for illustrative convenience).

Adverting to FIG. **4**, a process **400** is illustrated which may be utilized for polishing a semiconductor utilizing CMP tool **100**, according to an exemplary embodiment. The steps of process **400**, and other methods described herein, are described by way of example with the CMP tool **100**.

After process start, at step **401**, a semiconductor wafer is provided on the CMP tool **100**, including polish pad **103** and pad resurfacing arm **101**. The pad resurfacing arm **101** includes the pad cleaning part **107**, the pad conditioning part **109**, and the slurry dispensing part **111**. The CMP tool **100** also includes holder **105** holding the semiconductor wafer on the polish pad **103**.

At step **403**, the slurry dispensing part **111** in the pad resurfacing arm **101** dispenses slurry to the polish pad **103**, such as for polishing the semiconductor wafer which is held in the wafer holder **105**.

At step **405**, CMP tool **100** is utilized to polish the semiconductor wafer held in the wafer holder **105** by moving the semiconductor wafer while in contact with the polish pad **103**. The wafer may be moved over the polish pad in various ways, such as by rotating the wafer holder **105**, or rotating the polish pad **103** under the wafer, or combinations thereof.

Once the wafer has been polished sufficiently, if, at **407**, another wafer is to be planarized, the process **400** may begin again at step **401**. Otherwise, after **407**, the process ends. Although shown as requiring a slurry dispensing step prior to polishing for each wafer, it is possible to reuse a slurry for polishing multiple wafers rather than dispensing slurry for each wafer.

Adverting to FIG. **5**, an expanded process **500** is illustrated which may be utilized for polishing a semiconductor utilizing CMP tool **100**, according to an exemplary embodiment.

After process start, at step **501**, a semiconductor wafer is provided on the CMP tool **100**, including polish pad **103** and pad resurfacing arm **101**. The pad resurfacing arm **101** is cylindrical in shape and include guides made of a plastic, such as PEEK or PPS, and a hard conditioning material, such as a silicon carbide material. The arm **101** includes pad cleaning part **107**, pad conditioning part **109**, and slurry dispensing part **111**. The CMP tool **100** also includes wafer holder **105** holding the semiconductor wafer on the polish pad **103**.

At step **503**, the pad cleaning part **107** of the pad resurfacing arm **101** is utilized to clean the polish pad **103**, such as by spraying cleaning fluid on a surface of the polish pad **103** utilizing an atomizer within the pad cleaning part **107**. Pad cleaning step **503** may be performed in-situ or ex-situ. As indicated in FIG. **5**, pad cleaning step **503** may be omitted for one or more wafers. However, if it is desired that wafers be polished with equivalent conditions, according to an example, the cleaning step is preferably not omitted. The pad cleaning **503** is followed by a pad conditioning step **505**. However, the pad cleaning and the pad conditioning may occur in reverse order or may overlap or coincide, for example, provided that water from the pad cleaning is removed before dispensing a slurry for polishing the wafer. According to an example, it is possible to reuse the slurry for additional wafers, such as, for example, when pad cleaning is not done.

At step **505**, the pad conditioning part **109** of the pad resurfacing arm **101** is utilized to condition the polish pad **103** while rotating and sliding the arm **101** and/or applying different levels of force to the polish pad **103** from different locations of the arm **101**. As indicated in FIG. **5**, if no pad cleaning step is utilized, pad conditioning step **505** may also be omitted for one or more wafers. However, again for all wafers to be polished with the same conditions, the conditioning step should not be omitted. When step **505** is utilized, the polish pad **103** is conditioned in a pad conditioning step **505** followed by a slurry dispensing step **507**.

At step **507**, the slurry dispensing part **111** in the pad resurfacing arm **101** dispenses slurry to the polish pad **103**, for polishing the semiconductor wafer which is held in the wafer holder **105**. Although shown as separate steps in FIG. **5**, pad conditioning step **505** and slurry dispensing step **507** may occur together.

At step **509**, CMP tool **100** is utilized to polish the semiconductor wafer held in the wafer holder **105** by moving the semiconductor wafer while in contact with the slurry and the polish pad **103**. The wafer may be moved over the polish pad in various ways, such as by rotating the wafer holder **105**, or rotating the polish pad **103** under the wafer, or combinations thereof.

Once the wafer has been polished sufficiently, if, at **511**, another wafer is to be planarized, the process **500** may begin again at step **501**. Otherwise, at **511**, the process ends.

The embodiments of the present disclosure can achieve several technical effects, such as (1) consistent preparation and/or resurfacing over a whole surface of a polish pad in a CMP tool, (2) control and/or measurement of dynamic and/or differential downward forces applied to a polish pad in a CMP tool, (3) mechanical stability regarding mechanical parts utilized in a CMP tool and (4) a reduction of mechanical parts in a CMP tool utilized for preparing and/or resurfacing a polish pad in a CMP process. The present disclosure enjoys industrial applicability in any of the semiconductor arts. For example, the present disclosure enjoys industrial applicability associated with the designing and manufacturing of any of various types of highly integrated semiconductor devices used in microprocessors, smart phones, mobile phones, cellular handsets, set-top boxes, DVD recorders and players, automotive navigation, printers and peripherals, networking and telecom equipment, gaming systems, and digital cameras.

In the preceding description, the present disclosure is described with reference to specifically exemplary embodiments thereof. It will, however, be evident that various modifications and changes may be made thereto without departing from the broader spirit and scope of the present disclosure, as set forth in the claims. The specification and drawings are, accordingly, to be regarded as illustrative and not as restrictive. It is understood that the present disclosure is capable of using various other combinations and embodiments and is capable of any changes or modifications within the scope of the inventive concept as expressed herein.

What is claimed is:

1. A method comprising:

providing a semiconductor wafer on a chemical mechanical polishing (CMP) tool, the CMP tool comprising:

a polish pad, and

a pad resurfacing arm having a cylindrical or conical shape with a length extending from an outer periphery of the polish pad and across a center of the polish pad, the pad resurfacing arm comprising:

a pad cleaning part,

a pad conditioning part, and

a slurry dispensing part;

dispensing a slurry to the polish pad utilizing the pad resurfacing arm; and

polishing the semiconductor wafer utilizing the polish pad by rotating the pad resurfacing arm.

2. The method according to claim **1**, further comprising:

conditioning the polish pad, utilizing the pad resurfacing arm.

3. The method according to claim **1**, further comprising:

cleaning the polish pad, utilizing the pad resurfacing arm.

4. The method according to claim **1**, further comprising:

conditioning the polish pad, utilizing the pad resurfacing arm; and

cleaning the polish pad, utilizing the pad resurfacing arm.

5. The method according to claim **1**, wherein utilizing the pad resurfacing arm comprises sliding the pad resurfacing arm on the polish pad.

6. The method according to claim **1**, wherein the pad resurfacing arm comprises guides of a plastic material.

7. The method according to claim **1**, wherein utilizing the pad resurfacing arm comprises applying different levels of force to the polish pad from different locations of the pad resurfacing arm.

8. A method comprising:

providing a semiconductor wafer on a chemical mechanical polishing (CMP) tool, the CMP tool comprising:

a polish pad, and

a cylindrical pad resurfacing arm comprising guides of a plastic material and having a length extending from an outer periphery of the polish pad and across a center of the polish pad, the pad resurfacing arm further comprising:

a pad cleaning part,

a pad conditioning part, and

a slurry dispensing part;

cleaning the polish pad, utilizing the pad resurfacing arm;

conditioning the polish pad, utilizing the pad resurfacing arm;

dispensing a slurry to the polish pad, utilizing the pad resurfacing arm; and

polishing the semiconductor wafer, utilizing the polish pad,

wherein utilizing the pad resurfacing arm comprises:

vertically rotating the pad resurfacing arm,

sliding the pad resurfacing arm on the polish pad, and

applying different levels of force to the polish pad from different locations of the pad resurfacing arm.

* * * * *