US009468940B2

(12) **United States Patent**
**Henry et al.**

(10) **Patent No.: US 9,468,940 B2**
(45) **Date of Patent: Oct. 18, 2016**

(54) **ADJUSTABLE ORIFICE VALVE AND CALIBRATION METHOD FOR AMMONIA APPLICATOR SYSTEM**

(71) Applicant: **CNH Canada, Ltd.**, Saskatoon (CA)

(72) Inventors: **James W. Henry**, Saskatoon (CA); **Mohammad Vakil**, Saskatoon (CA)

(73) Assignee: **CNH Industrial Canada, Ltd.**, Saskatoon, Saskatchewan (CA)

( * ) Notice: Subject to any disclaimer, the term of this patent is extended or adjusted under 35 U.S.C. 154(b) by 771 days.

(21) Appl. No.: **13/675,258**

(22) Filed: **Nov. 13, 2012**

(65) **Prior Publication Data**

US 2014/0131469 A1 May 15, 2014

(51) **Int. Cl.**

| | |
|---|---|
| ***B05B 1/30*** | (2006.01) |
| ***A01C 23/02*** | (2006.01) |
| ***A01C 21/00*** | (2006.01) |
| ***A01C 23/04*** | (2006.01) |
| *A01C 23/00* | (2006.01) |

(52) **U.S. Cl.**

CPC ..... ***B05B 1/3046*** (2013.01); ***A01C 23/024*** (2013.01); *A01C 23/007* (2013.01)

(58) **Field of Classification Search**

CPC ... B05B 1/2046; B05B 1/304; B05B 1/3033; B05B 1/30; B05B 1/00; A01C 23/024; A01C 23/023; A01C 23/02; A01C 23/00; A01C 23/007; A01C 21/00; A01C 21/007; A01C 23/04; A01C 23/047; A01C 15/00; A01C 14/00; A01C 23/008

USPC ..... 111/200, 900, 118, 119, 129; 701/50

See application file for complete search history.

(56) **References Cited**

U.S. PATENT DOCUMENTS

| | | | | |
|---|---|---|---|---|
| 4,590,768 | A | 5/1986 | Halvorsen et al. | |
| 4,842,827 | A | 6/1989 | Graf et al. | |
| 7,096,744 | B2 | 8/2006 | Kielb et al. | |
| 7,379,832 | B2 | 5/2008 | Zimmermann et al. | |
| 7,640,078 | B2 | 12/2009 | Smirnov | |
| 7,824,636 | B1 | 11/2010 | Kraemer et al. | |
| 7,979,165 | B2 | 7/2011 | Gotoh et al. | |
| 8,037,894 | B1 | 10/2011 | Kelekar et al. | |
| 8,667,916 | B1 * | 3/2014 | Kiest | A01C 23/024 111/119 |
| 2003/0094196 | A1 | 5/2003 | Siefering et al. | |
| 2010/0286931 | A1 | 11/2010 | Mendelson et al. | |
| 2011/0155935 | A1 * | 6/2011 | Morkholt | F16K 31/041 251/129.11 |

OTHER PUBLICATIONS

aNH3.Company commits to Advancing Cover Crop Usage; Partners in Agriculture—Illinois Agrinews, p. 16; Aug. 3, 2012.

* cited by examiner

*Primary Examiner* — Christopher J Novosad
(74) *Attorney, Agent, or Firm* — Rebecca L. Henkel

(57) **ABSTRACT**

An ammonia applicator system is provided that has adjustable orifices with openings having variable sizes that can be changed remotely, without having to disassemble exit lines from a distribution manifold. In this way, the restriction of the exit lines and, thus, line flow rate can be adjusted remotely and/or automatically, even during ammonia application use. Each adjustable orifice may include a valve and an actuator that controls the valve for changing the size of the opening of the adjustable orifice. The actuator may be a rotary actuator, such as a stepper motor, and the valve may include an adjustment knob and a screw that can rotate to allow a needle to advance or regress through an opening of a valve body of the valve.

**11 Claims, 5 Drawing Sheets**

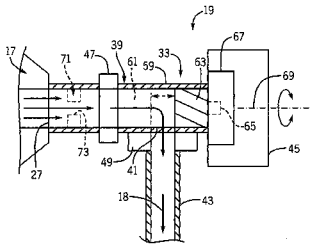


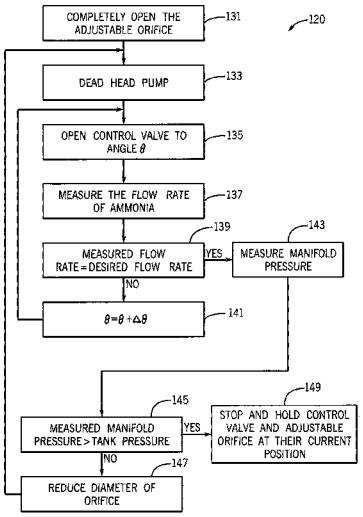

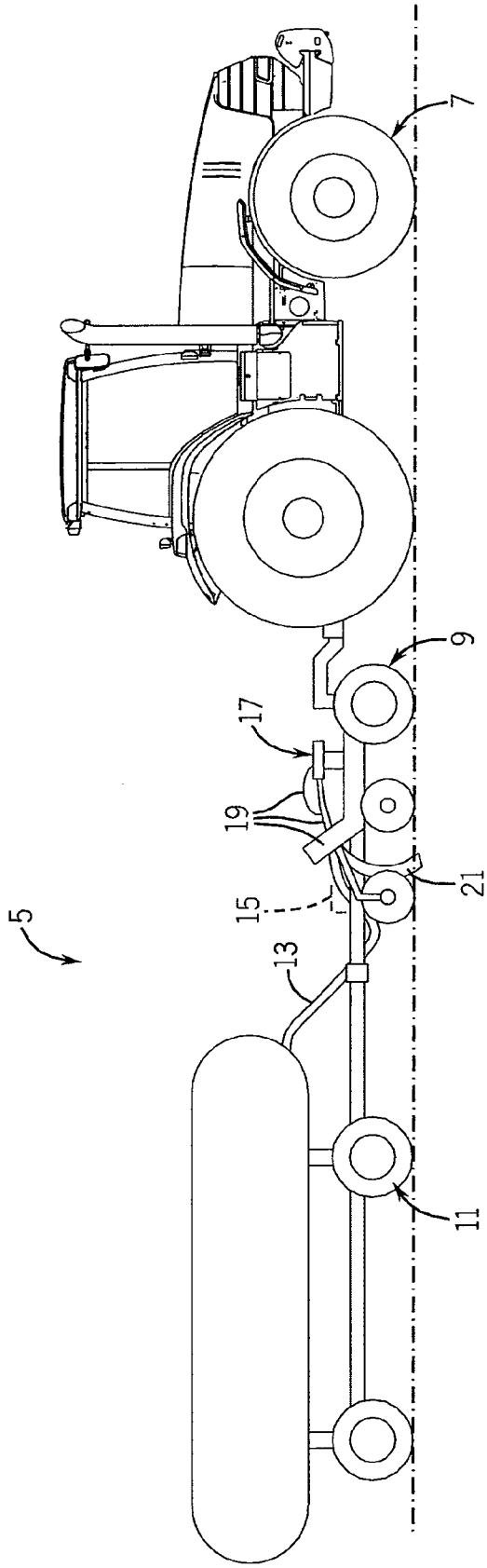


FIG. 1

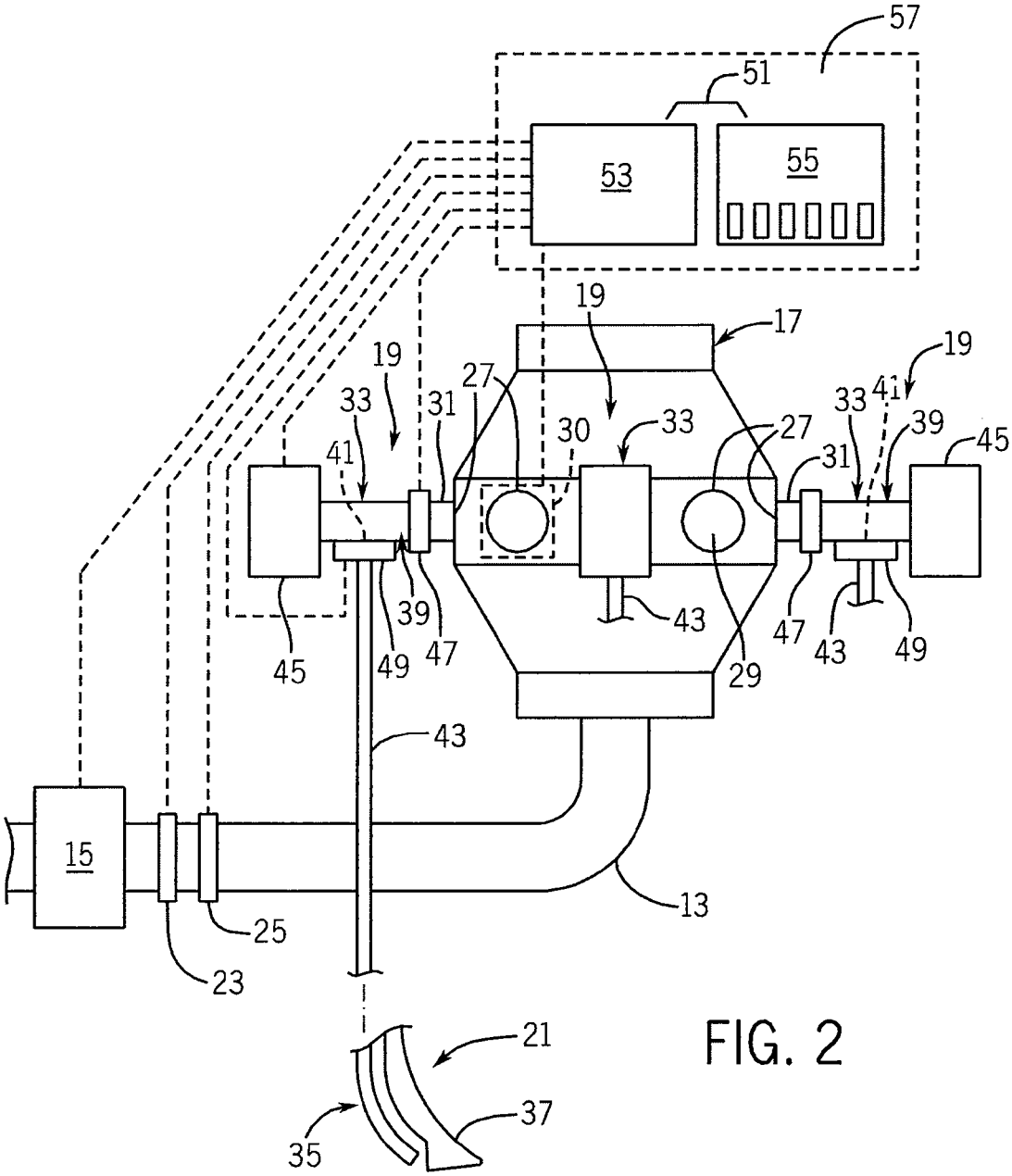
57
51
53
55
19
17
19
19
33
31
27
30
33
27
33
41
39
45
41
31
39
47
43
47
43
49
45
49
29
43
15
13
25
23
21
37
35

FIG. 2

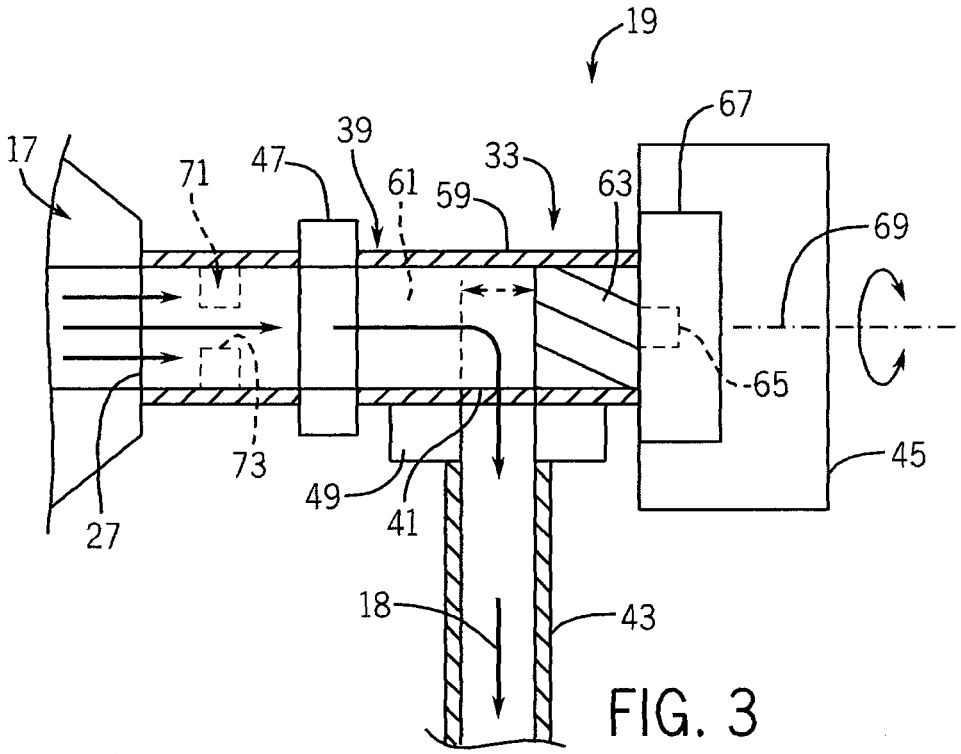
19
17
71
47
39
61
59
33
63
67
69
65
45
73
49
41
27
18
43

FIG. 3

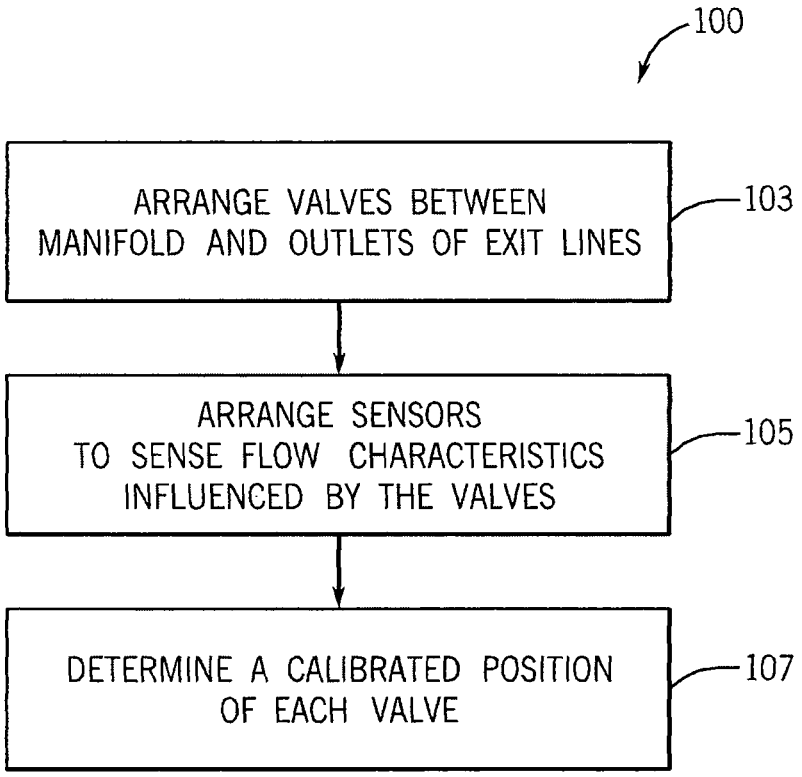
100
ARRANGE VALVES BETWEEN MANIFOLD AND OUTLETS OF EXIT LINES
103
ARRANGE SENSORS TO SENSE FLOW CHARACTERISTICS INFLUENCED BY THE VALVES
105
DETERMINE A CALIBRATED POSITION OF EACH VALVE
107

FIG. 4

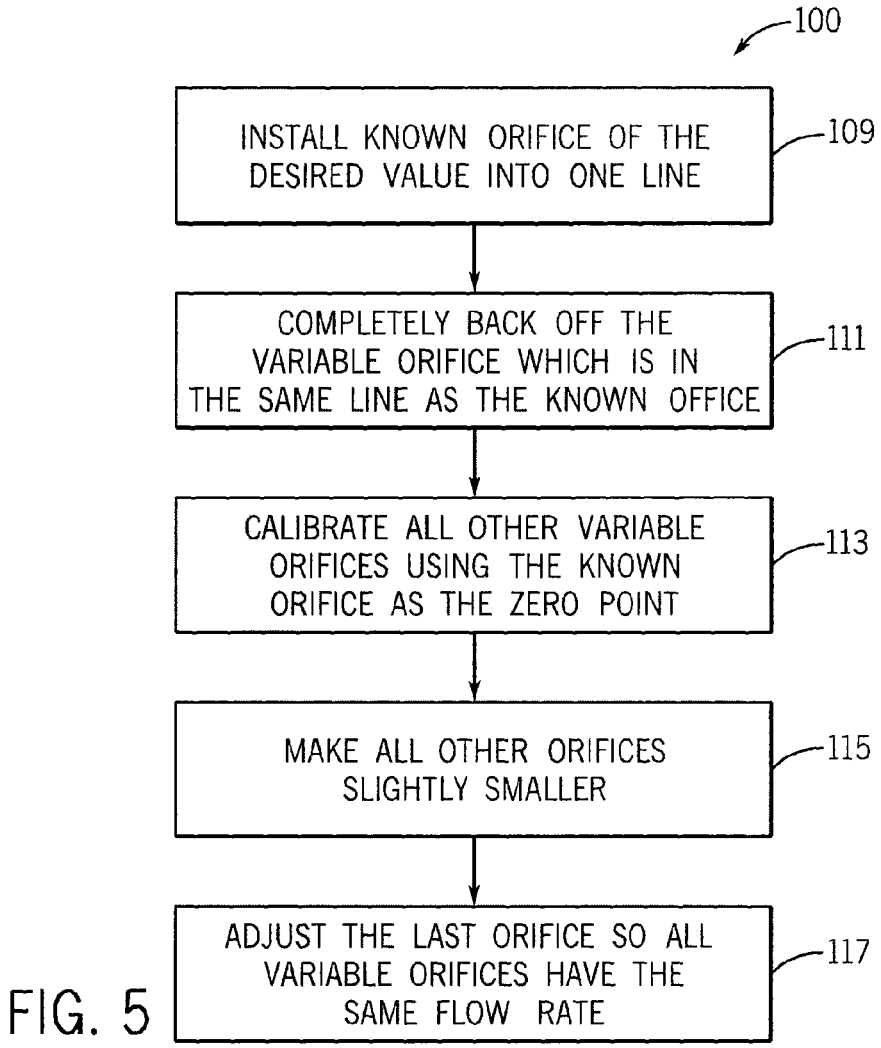
100
INSTALL KNOWN ORIFICE OF THE DESIRED VALUE INTO ONE LINE
109
COMPLETELY BACK OFF THE VARIABLE ORIFICE WHICH IS IN THE SAME LINE AS THE KNOWN OFFICE
111
CALIBRATE ALL OTHER VARIABLE ORIFICES USING THE KNOWN ORIFICE AS THE ZERO POINT
113
MAKE ALL OTHER ORIFICES SLIGHTLY SMALLER
115
ADJUST THE LAST ORIFICE SO ALL VARIABLE ORIFICES HAVE THE SAME FLOW RATE
117

FIG. 5

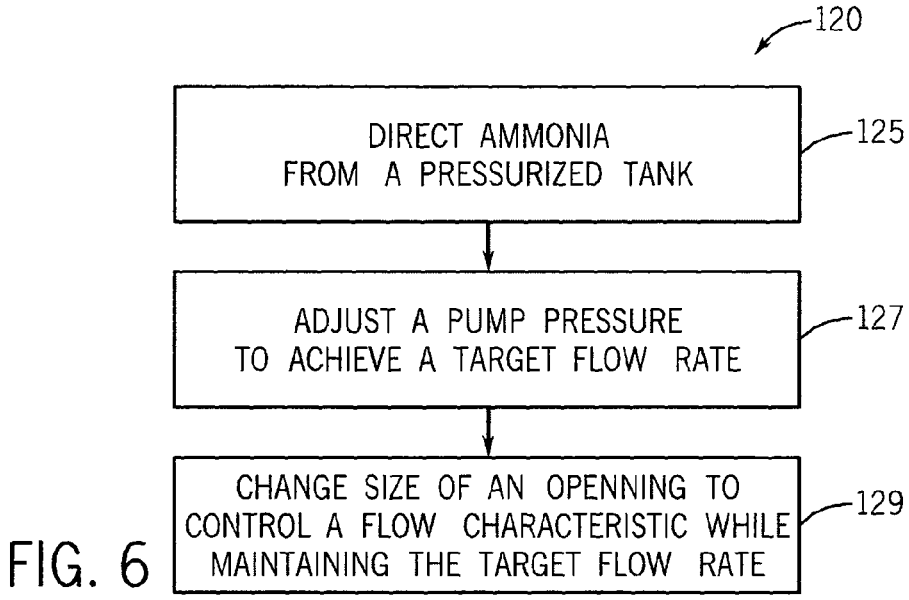
120
DIRECT AMMONIA FROM A PRESSURIZED TANK
125
ADJUST A PUMP PRESSURE TO ACHIEVE A TARGET FLOW RATE
127
CHANGE SIZE OF AN OPENNING TO CONTROL A FLOW CHARACTERISTIC WHILE MAINTAINING THE TARGET FLOW RATE
129

FIG. 6

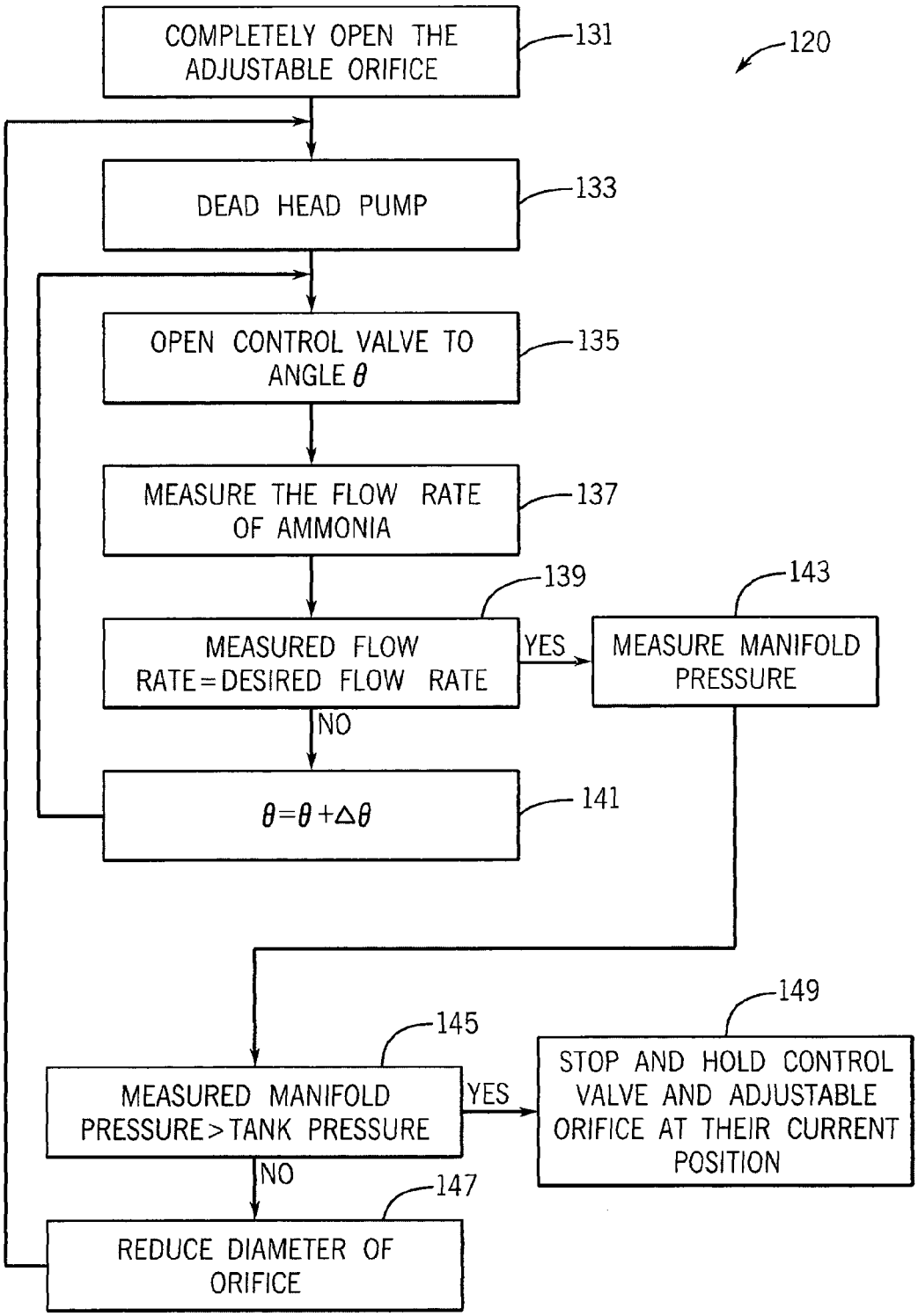
COMPLETELY OPEN THE ADJUSTABLE ORIFICE
131
120
DEAD HEAD PUMP
133
OPEN CONTROL VALVE TO ANGLE θ
135
MEASURE THE FLOW RATE OF AMMONIA
137
139
143
MEASURED FLOW RATE=DESIRED FLOW RATE
YES
MEASURE MANIFOLD PRESSURE
NO
θ=θ+Δθ
141
149
145
MEASURED MANIFOLD PRESSURE>TANK PRESSURE
YES
STOP AND HOLD CONTROL VALVE AND ADJUSTABLE ORIFICE AT THEIR CURRENT POSITION
NO
147
REDUCE DIAMETER OF ORIFICE

FIG. 7

# ADJUSTABLE ORIFICE VALVE AND CALIBRATION METHOD FOR AMMONIA APPLICATOR SYSTEM

## FIELD OF THE INVENTION

The invention relates generally to fertilizer applicators and, in particular, to ammonia applicators.

## BACKGROUND OF THE INVENTION

Anhydrous ammonia is commonly used as an agricultural fertilizer for supplying nitrogen to agricultural fields. It is often preferable to apply nitrogen as a liquid, free of vapor, to the agricultural fields. Maintaining ammonia as a vapor free liquid while conveying the ammonia through the ammonia applicator system helps in even distribution of the ammonia into the distribution line and onto the agricultural field. One way of maintaining ammonia in a liquid state is to pressurize the ammonia using a pump. Orifice plates are arranged at exit ports of distribution manifolds which create line restrictions and thus necessitate pressure increase, by pump, for a given flow rate. The amount of line restriction can be varied by changing the orifice plates to ones that have openings of different sizes for providing different line restrictions and therefore different flow rates.

## SUMMARY OF THE INVENTION

The present invention is directed to an ammonia applicator system that helps ensure delivery of liquid ammonia to a manifold(s) of the ammonia applicator system by way of adjustable orifices; that is, orifices with openings of variable sizes. These openings can be changed remotely, without having to disassemble the exit lines from the manifold. In this way, the restriction of the exit lines and, thus, line flow rate can be adjusted remotely and/or automatically, even during ammonia application use.

According to a first aspect of the invention, an ammonia applicator system for fertilizing an agricultural field is provided and includes a tank that can hold ammonia, a manifold that receives ammonia from the tank for distributing the ammonia onto the agricultural field, and multiple exit lines that extend from the manifold and through which ammonia can be directed onto the agricultural field. Multiple adjustable orifices may be arranged downstream of the manifold so that an adjustable orifice is provided in a flow path of each of the exit lines for controlling the flow characteristic of the ammonia that is directed through the exit lines. Each of the adjustable orifices may include an opening that can change size between a minimum opening size, which can be completely closed, and a maximum opening size so as to control the flow characteristic of the ammonia that is directed through the exit line. Each adjustable orifice may be arranged between an outlet port of the manifold and a respective exit line. Each adjustable orifice may include a valve that can move for changing the size of an opening of the adjustable orifice and an actuator that is arranged to move the valve so as to change the size of the opening of the adjustable orifice. The valve may include a screw and an adjustment knob that can rotate to advance or regress the screw so as to change the size of the opening of the adjustable orifice. The actuator may be a rotary actuator that is arranged to rotate the adjustment knob of the valve. This may allow for varying line restriction and thus varying the corresponding flow characteristic of the ammonia, even during use, without having to manually change orifice plates at the manifold.



According to another aspect of the invention, a pair of pressure sensors may be provided adjacent to each of the adjustable orifices. In this way a first pressure sensor may be arranged upstream of each of the adjustable orifices and a second pressure sensor may be arranged downstream of each of the adjustable orifices. This may allow for individual calibration and/or control of each of the adjustable orifices for establishing target or calibrated flow rates through each of the exit lines.

According to another aspect of the invention, a method is provided for using an ammonia applicator for fertilizing an agricultural field. The method may include directing ammonia from a pressurized tank along a delivery path that extends through a manifold and multiple exit lines that extend from the manifold and are arranged for delivering ammonia onto an agricultural field, adjusting a pump pressure to maintain a target flow characteristic of the ammonia and changing the size of an opening of an adjustable orifice for controlling a flow characteristic of the ammonia that is directed through a respective one of the multiple exit lines so as to maintain a target manifold pressure while the target flow rate of ammonia is maintained. This may allow for automatic control of flow rates and line pressures in the lines which may help maintaining the ammonia in a liquid state for liquid delivery onto the agricultural field.

According to another aspect of the invention, a rate of application of the ammonia to the agricultural field may be varied during a single fertilizing session in which the ammonia is applied to the agricultural field. An adjustable orifice at each of the multiple exit lines may be controlled so as to maintain a target flow characteristic of the ammonia through each of the multiple exit lines. The target flow characteristic, which may be flow rate of at least one of the multiple exit lines, is different from another one of the multiple exit lines. The multiple valves may be controlled in a manner that provides different ammonia delivery rates for the different multiple exit lines so as to achieve point row control in which the flow of ammonia to individual ground engaging tools, at which the multiple exit lines deliver the ammonia to the agricultural field, is separately controlled. This may allow for a highly controllable system for applying different amounts of the ammonia to different parts of the field with different fertilizing requirements which may reduce the amount of excess product applied to portions of the agricultural field, and may prevent product overlap in application.

According to another aspect of the invention, a method of calibrating an ammonia applicator for use in fertilizing an agricultural field is provided. The method may include determining a calibrated position of each of multiple valves. The calibrated positions of the valves may correspond to calibrated flow characteristics of ammonia flowing through the respective exit lines such as maximum liquid flow rates or target flow rates.

According to another aspect of the invention, a first pressure value may be determined upstream of each of multiple adjustable orifices and a second pressure value may be determined downstream of each of the multiple orifices. A position of each of the multiple valves may be adjusted to determine a position at which an initial pressure drop is established across the respective adjustable orifice, which may correspond to a maximum flow rate. One of the exit lines may be used as a base-value exit line to set for calibrating the other exit lines by adjusting the adjustable

orifices in the other exit lines. A first flow characteristic in the base-value exit line may be determined and the valve in another one of exit lines may be adjusted so as to achieve the first flow characteristic base-value exit line in the other exit line(s). The first flow characteristic may be a pressure related value that corresponds to a flow rate value, such as a required manifold pressure and a line flow rate. A fixed orifice that has an opening of a known fixed size may be arranged in a flow path that extends through a first one of the exit lines so as to define a first flow characteristic at a first one of the exit lines and positions of the valves may be adjusted to achieve the first flow characteristic in the other exit lines. The fixed orifice may establish a maximum flow rate at the first exit line and the other valves may be adjusted to achieve the maximum flow rate of the first exit line. Each of valves may include an adjustment knob that is turned by a rotary actuator for calibration and the angular position of the adjustment knob at the calibrated position may be stored in memory of a controller that controls the system. This may allow for calibration of an adjustable orifice on an ammonia applicator which allows automatic and/or remote adjustment of flow rate while accommodating differences in performance and/or manufacturing tolerances of valves or other hardware or components that may be within the system.

According to another aspect of the invention, calibration may be done by installing a fixed orifice in one of the exit lines that also has an adjustable orifice. The adjustable orifice in the exit line that also has the fixed orifice may be completely backed off so that initially only the fixed orifice provides a restriction in that exit line. The adjustable orifices in the other exit lines may be calibrated to the value of the exit line having the fixed orifice. Once the adjustable orifices in the other exit lines have been calibrated to match that of the fixed orifice, the adjustable orifices in the other exit lines may be adjusted slightly smaller. Then the adjustable orifice in the exit line that also has the fixed orifice is adjusted so that all of the exit lines have the same flow rate.

According to another aspect of the invention, during use, all of the adjustable orifices are completely opened so that the openings of the adjustable orifices define their maximum sizes which correspond to minimum restriction values in the exit lines. A control valve that controls the flow rate of the ammonia is adjusted to a first angle and the flow rate of the ammonia is measured. The measured flow rate is compared to a target flow rate. If the measured flow rate is not at the target flow rate, then a pump pressure or/and the angle of the control valve is adjusted and the flow rate is measured again. When the measured flow rate is at the target flow rate, then the pressure within the manifold is measured using a pressure sensor. If the manifold pressure is greater than the tank pressure of the tank that holds the anhydrous ammonia, then the control valve and the adjustable orifices are maintained at their current positions. Otherwise, if the manifold pressure is less than the tank pressure, then the adjustable orifices are adjusted so that their respective openings are made smaller and pump pressure increases, which increases the pressure in the manifold. This is done until the manifold pressure become equal or exceeds the tank pressure. This may allow for maintaining a target flow rate and target manifold pressure which may help maintain the ammonia in a vapor-free liquid state during application.

Other aspects, objects, features, and advantages of the invention will become apparent to those skilled in the art from the following detailed description and accompanying drawings. It should be understood, however, that the detailed description and specific examples, while indicating preferred embodiments of the present invention, are given by way of illustration and not of limitation. Many changes and modifications may be made within the scope of the present invention without departing from the spirit thereof, and the invention includes all such modifications.

## BRIEF DESCRIPTION OF THE DRAWINGS

Preferred exemplary embodiments of the invention are illustrated in the accompanying drawings in which like reference numerals represent like parts throughout.

FIG. **1** is a simplified partially schematic side elevation of an ammonia applicator system in accordance with the present invention;

FIG. **2** is a simplified partially schematic side elevation of a portion of the ammonia applicator system shown in FIG. **1**;

FIG. **3** is a simplified partially schematic cross-sectional view of portions of an exit line of the ammonia applicator system shown in FIG. **1**;

FIG. **4** is a flowchart of a first calibration procedure;

FIG. **5** is a flowchart of a variant of the calibration procedure of FIG. **4**;

FIG. **6** is a flowchart of a first use procedure; and

FIG. **7** is a flowchart of an algorithm for use with a variant of the use procedure of FIG. **6**.

## DETAILED DESCRIPTION OF THE PREFERRED EMBODIMENTS

Referring now to the drawings and specifically to FIG. **1**, an ammonia applicator system **5** is shown that is towed behind a tractor **7**. The ammonia applicator system **5** includes a fertilizer applicator **9** that is connected to a drawbar of the tractor **7**. The fertilizer applicator **9** may be one of the Case IH-Nutri-Placer series of fertilizer applicators available from CNH America LLC. A tank **11** is towed behind the fertilizer applicator **9** and holds liquid ammonia. A main line **13** connects the tank **11** to a pump **15** that pressurizes and delivers the ammonia to manifolds **17**, only one of which is shown. Each manifold **17** delivers the ammonia through multiple exit lines **19** for delivery on to the agricultural field at ground engaging tools **21** of the fertilizer applicator **9**.

Referring now to FIG. **2**, a main line valve **23** and a main line flow sensor **25** are arranged in the main line **13** for monitoring and adjusting delivery rate of the ammonia to the manifold **17**. The manifold **17** receives the ammonia from the mainline **13** and delivers the ammonia out of the manifold **17** along separate flow paths **18** (FIG. **3**) to begin at outlets **27** of the manifold **17**. Unused outlets **27** may be capped with plugs **29**. A sensor **30** may be arranged at one of the unused outlets **27** for measuring the pressure inside the manifold **17**. It is understood that the sensor **30** need not be a sensor, per se, but may instead be a gauge that can be read by a user. The outlets **27** that are being used are connected to exit lines **19** that extend from the manifold to the ground engaging tools **21**. Each exit line **19** includes an inlet **31** that is connected to the respective output **27** of the manifold **17**. An adjustable orifice **33** is arranged between the exit line inlet **31** and an outlet end **35** of the exit line **19**. The outlet end **35** of exit line **31** is shown in an arrangement that allows for delivery of ammonia underground behind a knife **37** of the ground engaging tool **21**.

Still referring to FIG. **2**, the adjustable orifice **33** includes a valve **39** (FIG. **3**) that has an opening **41** which can change sizes and that connects to a delivery tube **43** that extends from the valve **39** to the ground engaging tool **21**. An

actuator **45** is operably connected to the valve **39** for controlling the size of the opening **41**. The first sensor **47** is arranged in a first location along the flow path **18** (FIG. **3**) of ammonia through the exit line **31**. The sensor **47** is arranged between the manifold **17** and the valve **39** of the adjustable orifice **33** so that the sensor **47** is upstream of the adjustable orifice **33**. Although the sensor **47** is shown schematically as being downstream of the manifold **17**, it is understood that the sensor **47** may be a known sensor at the manifold **17** itself, whereby separate sensors **47** need not be implemented at each of the exit lines **19** in some embodiments. A second sensor **49** is arranged in a second location along the flow path **18** (FIG. **3**) of ammonia through the exit line **19**. The sensor **49** is arranged between the valve **39** and the delivery tube **43** so that the sensor **49** is downstream of the adjustable orifice **33**. In this way, the pair of sensors **47**, **49** are arranged on opposing sides of the adjustable orifice **33**. In one embodiment, the sensors **47**, **49** are pressure sensors that can sense pressure related flow characteristics of the ammonia flowing along the flow path **18** (FIG. **3**) through the exit line **19**.

Still referring to FIG. **2**, each of the pump **15**, the main line valve **23**, main line flow sensor **25**, manifold pressure sensor **30**, actuator **45**, and sensors **47**, **49** are operably connected to a control system **51**. Control system **51** is configured to remotely and/or automatically adjust line restrictions and therefore line flow rates and pressures of the exit lines **19** collectively and/or individually, even while ammonia is being dispensed. Outlet tubes **31** are connected to the outlets **27** that are being used and connect the outlets **27** to adjustable orifices **33**. Control system **51** is shown as having a controller **53** that can include an industrial computer or, e.g., a programmable logic controller (PLC), along with corresponding software and suitable hardware for controlling electronic or electro-mechanical components of the ammonia applicator system **5**. A user console **55** is operably connected to the controller **53** and includes a user interface such as indicator lights, a display, buttons, switches, and/or levers that can be manipulated by the operator to control operation of the ammonia applicator system **5** remotely, and monitor system performance and conditions of system components, from within the cab **57** of the tractor **7** (FIG. **1**).

Referring now to FIG. **3**, each valve **39** includes a valve body **59** that has a longitudinally extending opening **61**. The opening **41** extends through the valve body **59** to transversely intersect the opening **61**. A needle **63** is arranged for movement inside of the opening **61**. A screw **65** is operably connected to the needle **63** so that rotation of the screw **65** axially advances or regresses the screw **65** within the opening **61** based on the direction of rotation. A knob **67** is arranged at an end of the screw **65** and is locked into rotational unison with the screw **65**. In this way, rotation of the knob **67** about an axis of rotation **69** rotates the screw **65** which advances or regresses the needle **63** along the opening **61**. In this embodiment, the actuator **45** is a rotary actuator which may include a stepper motor that is controlled by the control system **51**. It is understood that the actuator **45** may be another type of actuator, such as a linear actuator, depending on the particular configuration of the valve **39**.

Still referring to FIG. **3**, the needle **63** can include a plunger-type body that occupies substantially all of the opening **61** so that moving the needle **63** through the opening **61** covers or uncovers and therefore varies the size and restriction through the opening **41**. In this way, flow characteristics of ammonia, such as pressure and velocity or flow rate, flowing to the delivery tube **43** can be adjusted. The needle **63** shown in solid line form in FIG. **3** is in a first position that represents a fully backed off position in which the valve **39** provides no restriction through the opening **41**. Rotating the knob **67** can axially advance the needle **63** to a second position that is represented by a dashed line that extends through the opening **61** and generally aligns with a left edge of the opening **41**. When the needle **63** is in the second position, flow of ammonia through opening **41** is fully restricted because the opening **41** is entirely blocked by the needle **63**. Rotating the knob **67** between the angular positions defined at the first and second positions of the needle **63** allow the size of the opening **41** to be adjusted between its fully unrestricted and fully restricted arrangements. Needle **63** may be infinitely adjustable between the fully unrestricted in the fully restricted positions. One suitable needle-type valve is model NFCC-KCN available from the Sun Hydraulics Corporation.

Still referring to FIG. **3**, the exit line **19** may also include a fixed orifice **71**. The fixed orifice **71** is arranged upstream of the adjustable orifice **33**. The fixed orifice **71** includes an opening **73** that is of a predetermined fixed size, as is known. When the fixed orifice **71** is implemented, the line restriction through exit line **19** has a minimum value that is established by the fixed orifice **71**. In this way, when the needle **63** is fully backed off so that the opening **41** is unrestricted, the exit line **19** is still restricted by the fixed orifice **71**.

Referring now to FIGS. **3** and **4**, the ammonia applicator system **5** may be generally calibrated in the following way, as represented by procedure **100** of FIG. **4** and the components of FIG. **3**. As shown at block **103**, the sensors **47**, **49** may be arranged within the exit lines **19**. As represented at block **105**, the flow sensor **25** may be used to measure flow rate and the sensors **47**, **49** may be used to determine pressure values within the adjustable orifice **33** at that particular sensed flow rate so that the control system **51** receives or determines measured pressure and corresponding measured flow rate values. A calibration position may be defined for each of the valves **39** as shown at block **107**. This may be done by establishing a target which may be a baseline flow characteristic through the adjustable orifice **33** in determining the position of the needle **63** at the angular position of the screw **65** or knob **67** that corresponds to such flow characteristic. The determined value may then be saved in the control system **51**.

Still referring to to FIGS. **3** and **4**, in one embodiment, the target value that represents a baseline flow characteristic may correspond to an initial pressure drop across the valve **39**. To establish the initial pressure drop across the valve **39**, each adjustable orifice **33** is adjusted from a fully backed off position of the needle **63** while monitoring pressure values that are sensed by the sensors **47** and **49**. The adjustable orifice **33** is adjusted by rotating the adjustment knob **67** to move the needle **63** from its fully backed off position so as to travel across the opening **41** until a pressure drop in the sensor **47** is observed. The angular position of the adjustment knob **67** when the initial pressure drop occurs across the valve **39** is stored by the control system **51**. This position represents a limit of the adjustable range of travel of the adjustment knob **67** and needle **63** of the maximum flow rate through the adjustable orifice **33** so that turning the adjustment knob **67** and moving the needle **63** relatively further across the opening **41** from this position will provide a lower flow rate through the exit line **19** and more line restriction through the exit line **19**. This may also represent a target flow rate that can be referenced by the control system **51** so that the control system **51** can return each of the adjustable orifices **33** to that position to provide the corresponding flow rate. Such calibration may be done in each of the adjustable

orifices **33** with the fixed orifice **71** arranged in one of the exit lines **19**, optionally with fixed orifices **71** arranged in more than one but fewer than all of the exit lines **19**, or in each of the exit lines **19**, whereby each adjustable orifice **33** is individually calibrated to determine the position of the adjustment knob **67** that represents the maximum flow rate position as defined by the fixed orifice **71** in the particular exit line **19**.

Referring now to FIGS. **3** and **5**, in this embodiment, only one fixed orifice **71** is used in the one of the exit lines **19** to calibrate the maximum flow rate position of the adjustment knob **67** for that exit line **19** as a base-value exit line **19**. The other exit lines **19** are calibrated to that base value exit line **19**. At blocks **109** and **111**, the fixed orifice **71** is installed in the base value exit line **19** and the needle **63** is completely backed off in the adjustable orifice **33** of the base value exit line **19**. Pressure readings are taken as sensed by the sensors **47** and **49** in the base value exit line **19** with the needle **63** completely backed off. For a given driving pressure upstream of the adjustable orifice **33**, when the needle **63** is completely backed off, the pressure differential across the sensors **47** and **49** represents the maximum flow rate for that particular upstream driving pressure and for that particular fixed orifice **71** size, against which the other exit lines **19** are calibrated as represented by block **113**. At block **115**, the other adjustable orifices **63** are then adjusted to make their respective openings **41** slightly smaller so as to reduce the flow rate and increase the line restriction in these other exit lines **19** to some extent while making the flow rates of these other exit lines **19** the same as each other. The adjustable orifice **33** of the base value exit line **19** is then adjusted to match the flow rates of all of the exit lines **19**, which is represented by block **117**. At this point, the angular positions of the adjustment knobs **67** can be stored by the control system **51** to correspond to a target flow rate value. The target flow rate value may be at or near a maximum flow rate of the adjustable orifices **33** so that further movement of the needles **63** away from the fully backed off positions and further across the openings **41** may increase line restriction and decrease flow rates.

Referring now to FIGS. **2**, **3**, and **6**, the ammonia applicator system **5** may be generally used in the following way, as represented by procedure **120** of FIG. **6** and the components of FIGS. **2** and **3**. As represented by block **125** of FIG. **6**, ammonia is directed from the tank **11** (FIG. **1**) toward the manifold **17**. As represented by block **127**, the pump **15** and the main line valve **23** are controlled by the control system **51** to provide a desired flow rate of the ammonia as sensed by sensor **25**. Block **129** represents changing the size of the openings **41** of the adjustable orifices **33** to control the flow characteristic of the ammonia that is flowing through the exit lines **19**. This may include providing enough line restriction to maintain at least some back pressure in the exit lines **19** while noting that by increasing line restriction, if the flow rate is kept constant, then the back pressure increases.

Another, more detailed, use procedure **120** is represented in FIG. **7** with reference to the components of FIGS. **2** and **3**. In this embodiment the adjustable orifices **33** are completely opened by fully backing out the needles **63** to fully expose the openings **41**, and the pump **15** is deactivated to provide no head pressure, shown as blocks **131** and **133**. The pump **15** is activated and the main line valve **23** is opened, as a control valve, to a predetermined angle that may be stored by the control system **51** or determined by the operator as a starting position, and the flow of ammonia is measured by the main line flow sensor **25**, as shown at blocks **135** and **137**. At block **139**, the measured flow rate of ammonia is compared to a desired flow rate by the control system **51** or by the operator. If the measured flow rate is not the desired flow rate, then the control valve such as main line valve **23** is adjusted until the desired flow rate is achieved, represented by block **141**. At block **143**, the manifold pressure is measured at the manifold pressure sensor **30**. The manifold pressure value is compared to the tank pressure value of the tank **11** (FIG. **1**). If the manifold pressure value is not equal or greater than the tank pressure value, then the adjustable orifices **33** are adjusted to decrease the size of the opening **41** to increase the line restriction of the exit lines **19** and to increase the back pressure of the manifold **17** as represented by blocks **145** and **147**. When the manifold pressure is greater than the tank pressure, then the control system **51** holds the main line valve **23** and the adjustable orifices **33** in their current positions. In this way the control system **51** is able to automatically control the adjustable orifices **33** and the pump **15** to maintain a desired flow rate while maintaining a desired manifold pressure. It is understood that the control system **51** need not control the adjustable orifices **33** at the same time or at the same rates. Instead, the control system **51** may individually control the adjustable orifices **33** to provide different ammonia delivery rates from different portions of the fertilizer applicator **9** (FIG. **1**). This may be done so as to achieve point row control in which the flow of ammonia for delivery at the individual ground engaging tools **21** is separately controlled. During point row control and/or other procedures, at least one of the adjustable orifices **33** may be completely closed to prevent delivery of ammonia through the respective exit line(s) **19**.

Many changes and modifications could be made to the invention without departing from the spirit thereof. The scope of these changes will become apparent from the appended claims.

We claim:

**1**. A method of using an ammonia applicator for fertilizing an agricultural field, the method comprising:

directing ammonia from a pressurized tank along a delivery path that extends through a manifold and multiple exit lines that extend from the manifold and are arranged for delivering ammonia onto an agricultural field;

adjusting a pump pressure to establish a target flow rate of the ammonia at a location along the delivery path;

changing the size of an opening of an adjustable orifice that is arranged downstream of the manifold for controlling a flow characteristic of the ammonia that is directed through a respective one of the multiple exit lines so as to maintain a target manifold pressure while the target flow rate of ammonia is maintained.

**2**. The method of claim **1** further comprising varying a rate of application of the ammonia to the agricultural field during a single fertilizing session in which the ammonia is applied to the agricultural field.

**3**. The method of claim **1** further comprising controlling an adjustable orifice at each of the multiple exit lines so as to maintain a target flow characteristic of the ammonia through each of the multiple exit lines.

**4**. The method of claim **3** wherein the target flow characteristic of at least one of the multiple exit lines is different from another one of the multiple exit lines.

**5**. The method of claim **4** wherein each of the adjustable orifices includes a valve that can be controlled independently of each other so as to provide different ammonia delivery rates for the different multiple exit lines for achieving point row control in which ammonia can be applied at

different delivery rates at different ground engaging tools at which the multiple exit lines deliver the ammonia to the agricultural field.

**6**. The method of claim **5** wherein the different ammonia delivery rates are performed during a point row control period and wherein the valves are controlled in a manner that provides the same ammonia delivery rate for the different multiple exit lines during a non-point row control period.

**7**. The method of claim **6** wherein at least one of the valves is controlled to completely shut a respective one or more of the openings so as to prevent delivery of ammonia through a respective one or more of the exit lines.

**8**. The method of claim **5** further comprising determining a first pressure value upstream of the valve and a second pressure value downstream of the valve at each of the exit lines.

**9**. The ammonia applicator system of claim **5** wherein each valve includes a screw and an adjustment knob that can rotate to advance or regress the screw so as to change the size of the opening of the adjustable orifice and a actuator is a rotary actuator that is arranged to rotate the adjustment knob of the valve.

**10**. The ammonia applicator system of claim **9** wherein each adjustable orifice is arranged between an outlet port of the manifold and the respective exit line.

**11**. The ammonia applicator system of claim **10** further comprising a pair of pressure sensors adjacent each of the adjustable orifices so that a first pressure sensor is arranged upstream of each of the adjustable orifices and a second pressure sensor is arranged downstream of each of the adjustable orifices.

* * * * *