US009462740B2

(12) **United States Patent**
Buelow

(10) **Patent No.: US 9,462,740 B2**
(45) **Date of Patent: Oct. 11, 2016**

(54) **LONG DISTANCE ELECTRONIC LOAD SENSE SIGNAL COMMUNICATION FOR IMPLEMENT CONTROL**

(71) Applicant: **CNH Industrial America LLC**, New Holland, PA (US)

(72) Inventor: **Jonathan L. Buelow**, Houston, TX (US)

(73) Assignee: **CNH Industrial America LLC**, New Holland, PA (US)

(*) Notice: Subject to any disclaimer, the term of this patent is extended or adjusted under 35 U.S.C. 154(b) by 181 days.

(21) Appl. No.: **14/309,265**

(22) Filed: **Jun. 19, 2014**

(65) **Prior Publication Data**

US 2015/0366126 A1 Dec. 24, 2015

(51) **Int. Cl.**

A01B 76/00	(2006.01)
A01C 7/08	(2006.01)
A01B 79/00	(2006.01)

(52) **U.S. Cl.**

CPC ***A01B 79/005*** (2013.01); ***A01B 76/00*** (2013.01); *A01C 7/081* (2013.01)

(58) **Field of Classification Search**

CPC A01B 79/05; A01B 79/00; A01B 76/00
See application file for complete search history.

(56) **References Cited**

U.S. PATENT DOCUMENTS

4,550,747	A *	11/1985	Woodworth	G05D 7/0635 137/487.5
5,028,017	A *	7/1991	Simmons	B64F 5/0063 239/131
5,446,979	A	9/1995	Sugiyama et al.	
6,016,875	A	1/2000	Orbach et al.	
6,058,343	A	5/2000	Orbach et al.	
6,389,999	B1	5/2002	Duello	
6,408,622	B1	6/2002	Tsuruga et al.	
7,431,101	B2	10/2008	Hacker	
7,938,074	B2	5/2011	Liu	
8,230,771	B2	7/2012	Bitter	
8,346,442	B2	1/2013	Ryder et al.	
2011/0313575	A1	12/2011	Kowalchuk et al.	
2013/0032362	A1	2/2013	Rylander	
2013/0032363	A1	2/2013	Curry et al.	
2013/0081830	A1	4/2013	Tuttle et al.	
2013/0104785	A1	5/2013	Achen et al.	
2013/0146318	A1	6/2013	Bassett	
2013/0192186	A1	8/2013	Bassett	

OTHER PUBLICATIONS

"Hydraulics, closed-center, pressure-and-flow compensated (pfc)—29 gpm", Deere & Company Sales Manual, 2012 (3 pages).
"Puma Series Tractors", CNH America LLC brochure, 2011 (28 pages).

* cited by examiner

Primary Examiner — Christopher J Novosad
(74) *Attorney, Agent, or Firm* — Rebecca L. Henkel

(57) **ABSTRACT**

An agricultural system including a tractor and an implement powered by the tractor. The implement having a plurality of hydraulic fluid using devices, at least one transducer, and a communications device. The transducer is configured to generate a signal representative of a hydraulic load requirement of the plurality of hydraulic fluid using devices. The communications device conveying the signal to the tractor. The tractor is configured to alter a hydraulic fluid characteristic supplied to the implement dependent upon the signal.

20 Claims, 3 Drawing Sheets

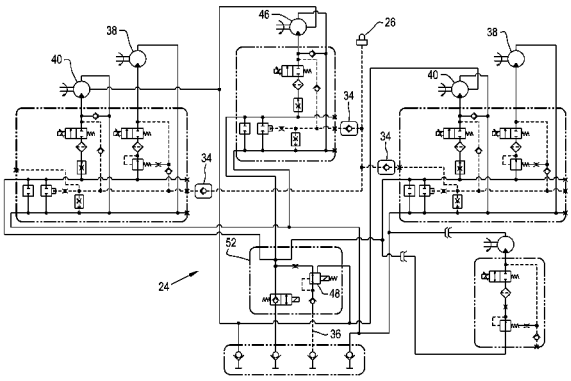

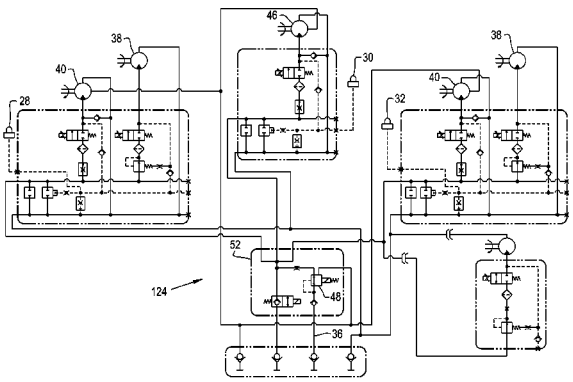

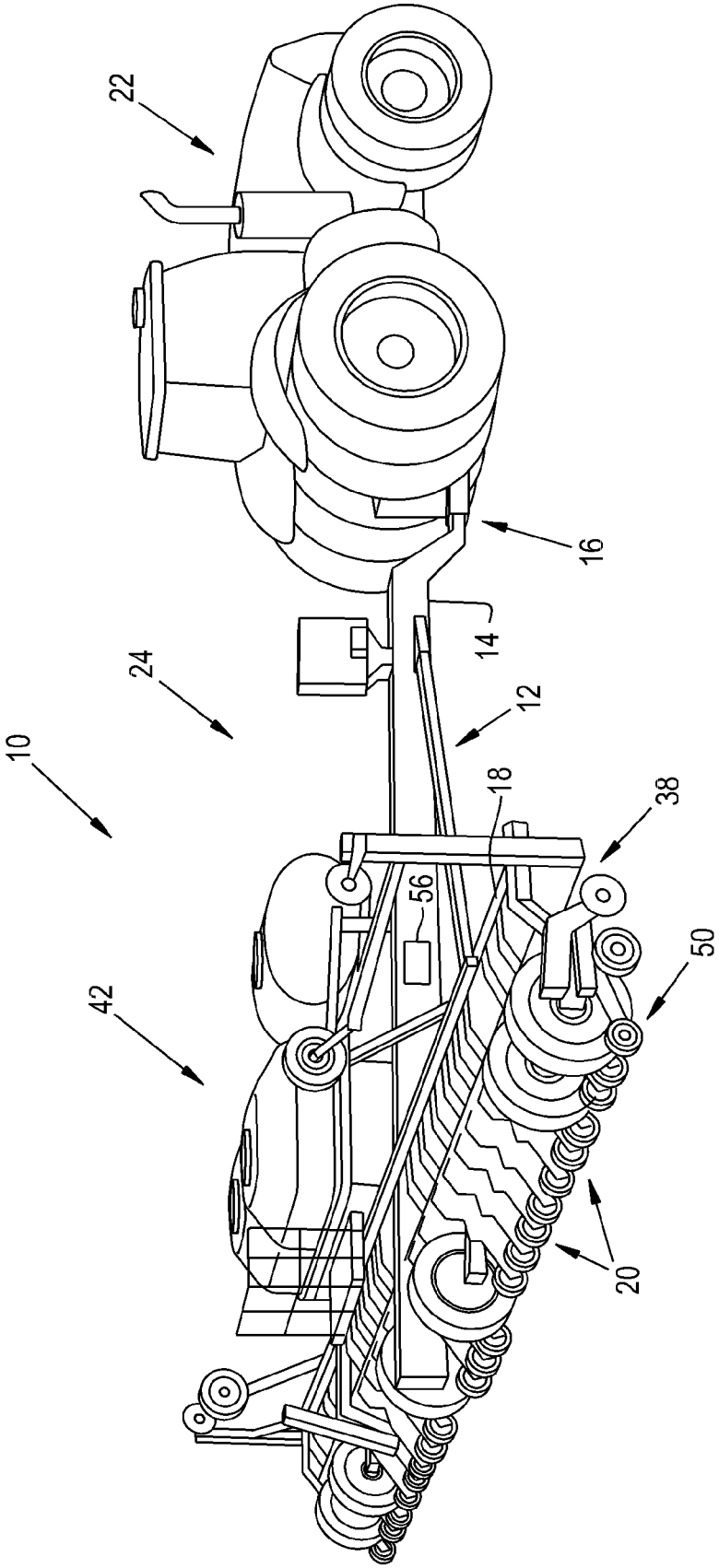

Fig. 1

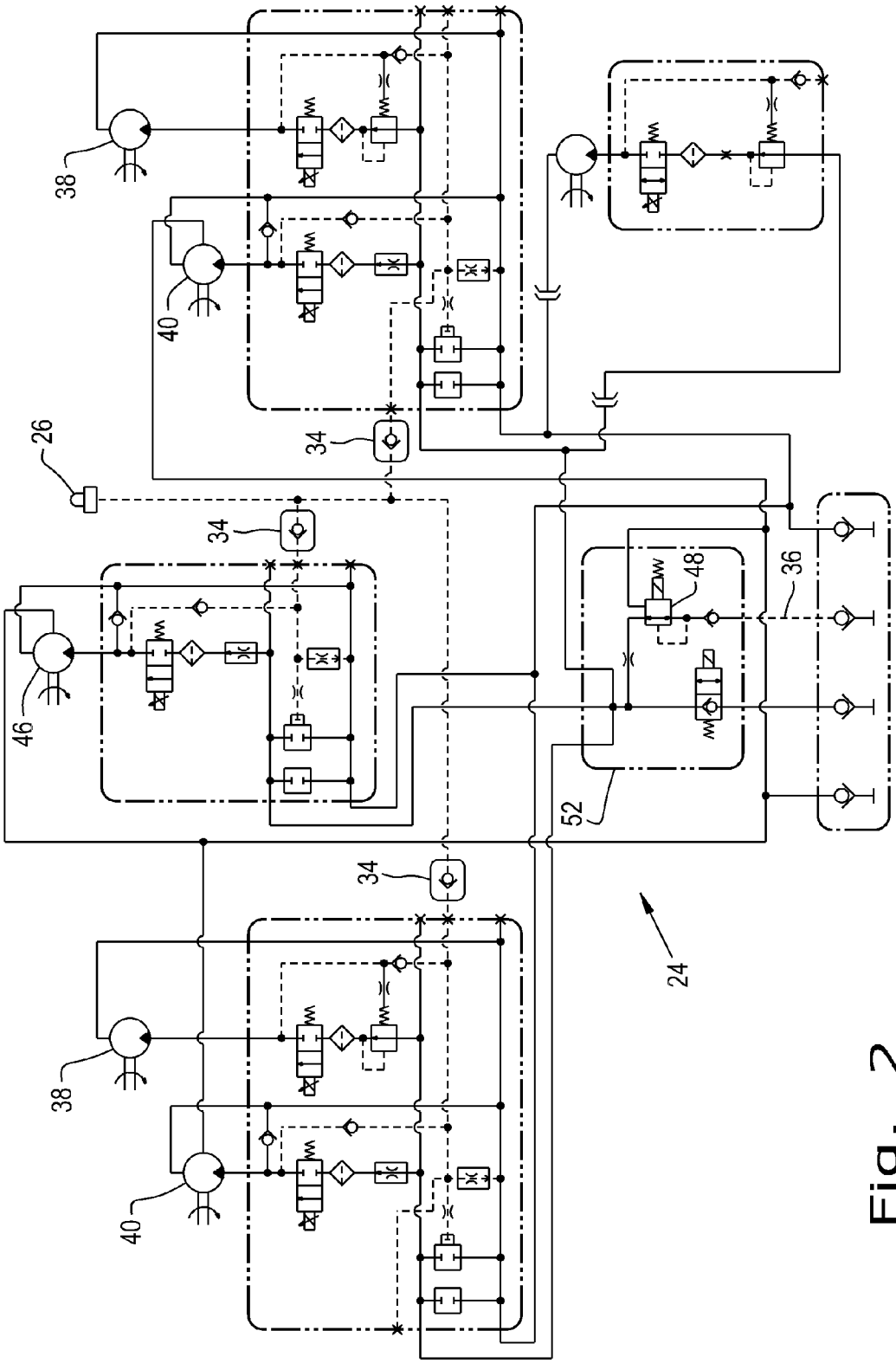

Fig. 2

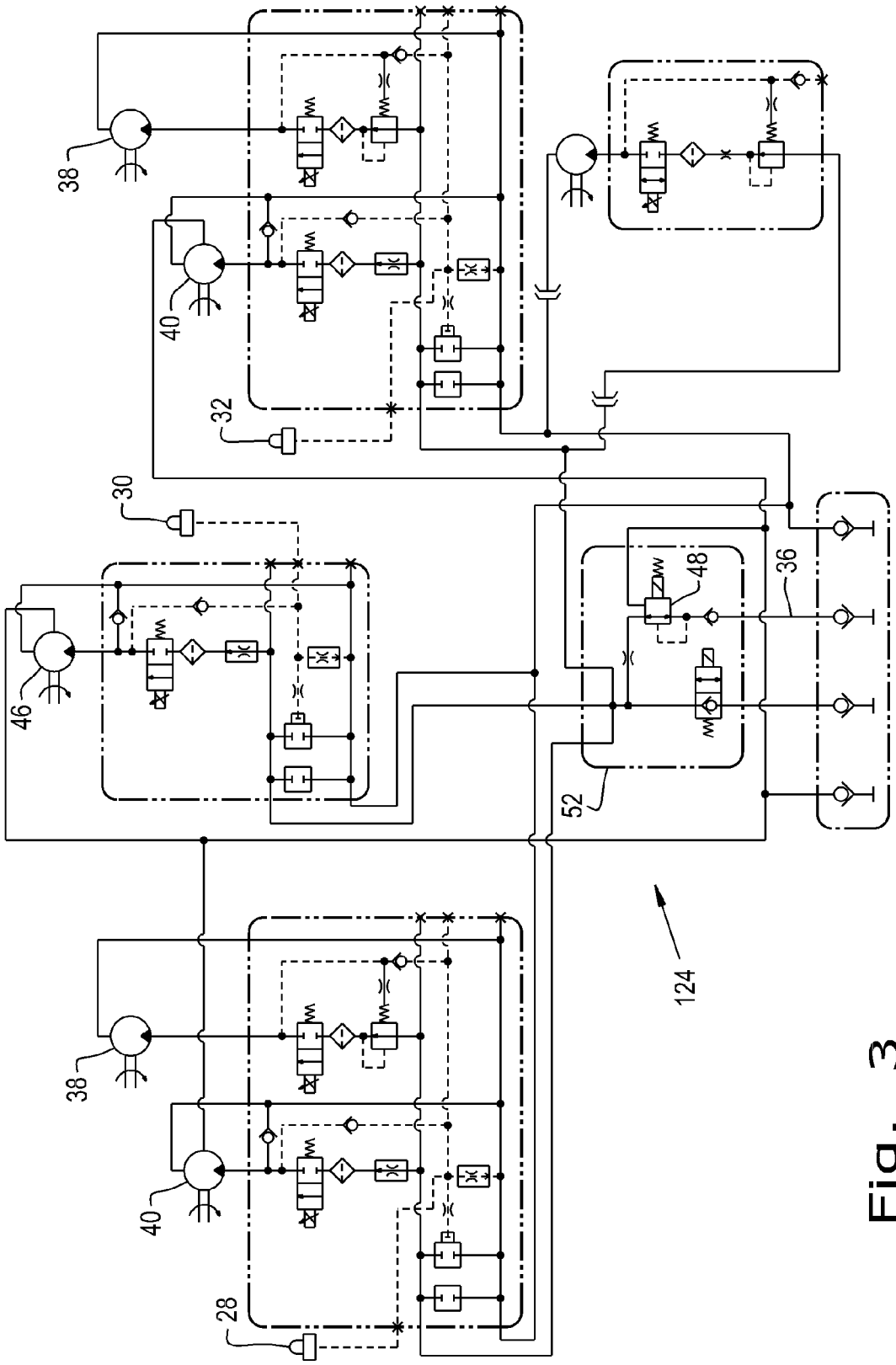

Fig. 3

LONG DISTANCE ELECTRONIC LOAD SENSE SIGNAL COMMUNICATION FOR IMPLEMENT CONTROL

BACKGROUND OF THE INVENTION

1. Field of the Invention

The present invention generally relates to agricultural implements, and more particularly to hydraulic load sensing systems of agricultural implements.

2. Description of the Related Art

Farmers utilize a wide variety of implements, including seeding implements such as drills and planters. In a known type of planting implement, seed planting or row units are attached to a toolbar extending transverse to the direction of planting. The toolbar is coupled to a tractor or other work vehicle suitable for pulling the planting implement along a field that is to be seeded to a crop. Each planting unit includes a ground penetrating assembly that shapes the bottom and sides of the seed trench, and a seed metering device provides individual seeds at a controlled rate for deposit in the seed trench. Furrow closing components of each row unit close the seed trench in a controlled manner.

The planter typically will have at least one hydraulic motor to run a fan for the movement of seed and at least one hydraulic seed drive motor, each having a variable hydraulic fluid use. These and other hydraulic fluid using devices on the implement use pressurized hydraulic fluid supplied by the tractor pulling the implement. The tractor may have a hydraulic pump with a variable output capability. The current art includes using hydraulic lines or hoses to communicate the load requirements to a control on the planter. This poses some difficulty to effectively do as the implements have increased in size requiring longer and longer hydraulic lines that have inherent losses and response delays.

What is needed in the art is a more cost effective and quicker response load control system for implements.

SUMMARY OF THE INVENTION

The present invention provides an implement load sensing and control system for an agricultural implement, and more particularly a planter having transducers that electronically resolve the load requirements.

In one form thereof, the invention is directed to an agricultural system including a tractor and an implement powered by the tractor. The implement having a plurality of hydraulic fluid using devices, at least one transducer, and a communications means. The transducer is configured to generate a signal representative of a hydraulic load requirement of the plurality of hydraulic fluid using devices. The communications means convey the signal to the tractor. The tractor is configured to alter a hydraulic fluid characteristic supplied to the implement dependent upon the signal.

In another form, the invention is directed to an agricultural implement powered by a tractor. The implement includes a plurality of hydraulic fluid using devices, at least one transducer, and a communications means. The transducer is configured to generate a signal representative of a hydraulic load requirement of the plurality of hydraulic fluid using devices. The communications means conveys the signal to the tractor. The tractor is configured to alter a hydraulic fluid characteristic supplied to the implement dependent upon the signal.

An advantage of the present invention is that the hydraulic load is quickly resolved and conveyed to the tractor.

Another advantage of the present invention is that it eliminates long hydraulic lines used for load control.

BRIEF DESCRIPTION OF THE DRAWINGS

The above-mentioned and other features and advantages of this invention, and the manner of attaining them, will become more apparent and the invention will be better understood by reference to the following description of embodiments of the invention taken in conjunction with the accompanying drawings, wherein:

FIG. **1** is a perspective view of an agricultural seed planting implement;

FIG. **2** is a schematic representation of a load sense system and other elements in one embodiment of the present invention used on the implement of FIG. **1**; and

FIG. **3** is a schematic representation of a load sense system and other elements in another embodiment of the present invention used on the implement of FIG. **1**.

Corresponding reference characters indicate corresponding parts throughout the several views. The exemplifications set out herein illustrate embodiments of the invention and such exemplifications are not to be construed as limiting the scope of the invention in any manner.

DETAILED DESCRIPTION OF THE INVENTION

Referring now to the drawings, and more specifically to FIG. **1** in particular, a seed planting implement **10** is shown. Seed planting implement **10** has a frame that includes a tow bar assembly **12** having a tow bar **14** and a connection assembly **16** at the longitudinally forward end thereof configured for mating with a corresponding hitch of a tractor or other work vehicle (not shown) for pulling seed planting implement **10** through a field. A laterally extending toolbar **18** is generally transverse to tow bar **14** and thereby generally transverse to the direction implement **10** is towed during planting operations. A plurality of seed planting units (or row units) **20** are connected to toolbar **18** in a side by side relationship, each of the seed planting units (row units) being substantially identical to the others. In the exemplary embodiment shown, seed planting implement **10** includes sixteen seed planting units **20**, only some of which are identified with reference numbers; however, it should be understood that more or fewer seed planting units can be provided on a particular seed planting implement.

Each seed planting unit **20** is connected to toolbar **18** by upper and lower arms. Each seed planting unit **20** extends rearward from toolbar **18** to plant a row of seeds as seed planting implement **10** is towed across a field by tractor **22**. The individual planting units **20** are spaced along toolbar **18** to provide planted seed rows of a desired spacing. During a planting operation, forward movement of seed planting implement **10** causes each seed planting unit **20** to form a seed trench, deposit equally spaced seeds in the seed trench and close the seed trench over the deposited seeds.

A seed metering system receives seeds from a seed hopper and provides individual seeds at a controlled rate to a seed tube for deposit in the bottom of the seed trench. Bulk tanks **42** contain seed and perhaps fertilizer or chemicals that are metered to, or proximate to, the seed trench. A vacuum system includes a fan/motor **40** that provides vacuum to a seed metering system for the operation of the seed metering system. A seed trench closing mechanism **50** at the trailing end of each seed planting unit **20** closes the seed trench after the seeds have been deposited in the seed trench. Seed trench

closing mechanism **50** may include a pair of pinch wheels that operate on opposite sides of the seed trench to move soil back into the seed trench and over the seeds deposited in the bottom of the seed trench. A trailing press wheel travels along the top of the closed seed trench and firms the soil replaced in the seed trench.

Now, additionally referring to FIGS. **2** and **3** there are shown schematical representations of two hydraulic load sensing systems **24** and **124** that resolve the highest load requirement and conveys that information to tractor **22**, which supplies pressurized hydraulic fluid to implement **10** based on the information.

Now looking at FIG. **2**, there is illustrated a hydraulic load sensing system **24** where a transducer **26** senses a load by having pressurized fluid from multiple parts of planter **10** conveyed thereto, through valves **34**. Illustrated here, there are seed drive motors **38**, and fan motors **40** in two different sections and a bulk fill fan **46** located at another section of implement **10**. These separate sections will have a load that requires a determinable amount of hydraulic fluid flow at a specific pressure to fulfil their individual load requirements. This load requirement is conveyed to transducer **26** by way of valves **34**, which may be shuttle valves or other suitable valves that will allow the highest load need to be conveyed to transducer **26**. Transducer **26** generates a signal representative of the load requirement and conveys the information by way of a communications means **36** represented here as a signal line **36**, to tractor **22**. The output of signal line **36** may be a synthesized hydraulic pressure that serves as the signal, particularly for the sake of compatibility with legacy tractor control systems.

In turn tractor **22** receives the signal from signal line **36** and uses that information to compensate the pressure and flow of the hydraulic fluid generated by a hydraulic pump coupled to an engine in tractor **22**, to thereby produce adequate power to run implement **10**. An advantage of the present invention is that the hydraulic needs of implement **10** can be met without the need to generate, by default, a constant higher pressure fluid supply. This reduces the energy losses that are experienced by less robust control systems.

Now, additionally looking at FIG. **3**, there is illustrated a hydraulic load sensing system **124** that has many of the same elements as system **24**. Here instead of having one transducer **26**, there are three transducers **28**, **30** and **32**, each respectively assigned to one of the sections previously discussed. In this embodiment of the present invention, each transducer **28**, **30** and **32** generates an individual signal, with them being electronically resolved to ultimately present one signal, by way of signal line **36**, to tractor **22**. The resolution of the signal is to present the highest result as the signal on signal line **36**. Signal line **36** may be an electronic signal conveyed by a wire, a wireless electronic signal, or the signal may be presented in some other medium, such as a fluid or air. More specifically, the signal from the transducer (s) is converted into a current command to a duplicator valve **48** at the front of planter **10** or on tractor **22**. The duplicator valve **48** uses supply oil from the power beyond line to create a duplicated hydraulic pressure signal the same as the highest load signal on the planter.

With the prior art the distance between the planter and the tractor is too long to provide a hydraulic hose between the load and the source to properly control a pressure compensated load sense system. In contrast the present invention uses pressure transducer(s) **26**, **28**, **30** and **32**, depending upon the embodiment, to capture the highest load pressure, and convert that to an electronic signal that is sent to a valve either on the front of planter **10** or on tractor **22** which can convert/duplicate that hydraulic pressure into the hydraulic load sense signal circuit.

These long distances between a prior art planter and tractor **22** make it difficult to use a hydraulic hose to effectively communicate the load signals between the planter and tractor. This prevents the signal being used to control the tractor and therefore taking advantage of the efficiencies available from a pressure flow compensating (PFC) load sensing system.

In the present invention pressure transducer **26** or a group of pressure transducers **28**, **30** and **32** are used by hydraulic load sensing system **24** or **124** at the toolbar of implement **10**. Depending on the pressure transducer used, the system pressure can be resolved hydraulically thru a chain of load sense check valves **34** which communicate to one transducer **26**, as in system **24** or a group of transducers **28**, **30**, **32** may be used, as in system **124**, with the highest pressure signal is resolved electronically at the controller. The oil supplied to the transducer controlled circuits on implement **10** will come from the power beyond connection on tractor **22**. The power beyond connections are a grouping of pump supply, return, and load sense signal inputs.

The pressure transducer (single or multiple arrangement) provides an electronic signal to the implement **10** controller **56**. Controller **56** converts the signal into a current command to the duplicator valve **48** at the front of planter **10** or on tractor **22**. The duplicator valve **48** uses supply oil from the power beyond line, or pump supply, to create a duplicated pressure signal the same as the highest load signal on the planter. The duplicated signal (if higher than the load sense signal circuit on the tractor) will communicate back to the PFC pump, thereby altering the hydraulic fluid pressure presented to implement **10**.

Duplicator valve **48** may be located in a valve manifold **52** coupled to implement **10**, or duplicate valve **48** may be located on tractor **22**. Valve manifold **52** is used to control power beyond flow. When tractor **22** is running power beyond is always pressurized and is able to flow oil. A solenoid operated check valve in valve manifold **52** blocks flow from getting out to the planter and running continuously.

While this invention has been described with respect to at least one embodiment, the present invention can be further modified within the spirit and scope of this disclosure. This application is therefore intended to cover any variations, uses, or adaptations of the invention using its general principles. Further, this application is intended to cover such departures from the present disclosure as come within known or customary practice in the art to which this invention pertains and which fall within the limits of the appended claims.

What is claimed is:

1. An agricultural system, comprising:

a tractor; and

an implement powered by said tractor, said implement including:

a plurality of hydraulic fluid using devices;

at least one transducer configured to obtain hydraulic load requirements of said plurality of hydraulic fluid using devices;

a resolving means resolving a highest hydraulic load requirement from said load requirements;

a generating means to generate a signal representative of said highest hydraulic load requirement of said plurality of hydraulic fluid using devices; and

a communications means for conveying said signal to said tractor, said tractor being configured to alter a hydraulic fluid characteristic supplied to said implement dependent upon said signal.

2. The agricultural system of claim **1**, further comprising a plurality of valves interconnecting at least two of said plurality of hydraulic fluid using devices, said at least one transducer being fluidly coupled between said plurality of valves, said plurality of valves being configured to convey a hydraulic pressure therethrough such that said at least one transducer is exposed to a higher of a fluid pressure from said at least two of said plurality of hydraulic fluid using devices.

3. The agricultural system of claim **1**, wherein at least one of said plurality of hydraulic fluid using devices is a fan motor.

4. The agricultural system of claim **1**, wherein at least one of said plurality of hydraulic fluid using devices is a seed drive motor.

5. The agricultural system of claim **1**, wherein said implement is an agricultural planter.

6. The agricultural system of claim **1**, wherein said at least one transducer is a plurality of transducers each associated with at least one of said plurality of hydraulic fluid using devices.

7. The agricultural system of claim **6**, wherein said plurality of transducers are arranged such that said signal represents a highest of the hydraulic load requirement of said plurality of hydraulic fluid using devices.

8. The agricultural system of claim **1**, wherein said signal is used by said tractor to alter a pressure of the hydraulic fluid supplied to said implement.

9. The agricultural system of claim **8**, wherein said plurality of hydraulic fluid using devices includes a fan motor and a seed drive motor.

10. The agricultural system of claim **9**, wherein said signal represents a higher of a hydraulic load requirement of said fan motor and a hydraulic load requirement of said seed drive motor.

11. An agricultural implement powered by a tractor, the implement comprising:

a plurality of hydraulic fluid using devices;

at least one transducer configured to obtain hydraulic load requirements of said plurality of hydraulic fluid using devices;

a resolving means resolving a highest hydraulic load requirement from said load requirements;

a generating means to generate a signal representative of said highest hydraulic load requirement of said plurality of hydraulic fluid using devices; and

a communications means for conveying said signal to the tractor, the tractor being configured to alter a hydraulic fluid characteristic supplied to the implement dependent upon said signal.

12. The agricultural implement of claim **11**, further comprising a plurality of valves interconnecting at least two of said plurality of hydraulic fluid using devices, said at least one transducer being fluidly coupled between said plurality of valves, said plurality of valves being configured to convey a hydraulic pressure therethrough such that said at least one transducer is exposed to a higher of a fluid pressure from said at least two of said plurality of hydraulic fluid using devices.

13. The agricultural implement of claim **11**, wherein at least one of said plurality of hydraulic fluid using devices is a fan motor.

14. The agricultural implement of claim **11**, wherein at least one of said plurality of hydraulic fluid using devices is a seed drive motor.

15. The agricultural implement of claim **11**, wherein said implement is an agricultural planter.

16. The agricultural implement of claim **11**, wherein said at least one transducer is a plurality of transducers each associated with at least one of said plurality of hydraulic fluid using devices.

17. The agricultural implement of claim **16**, wherein said plurality of transducers are arranged such that said signal represents a highest of the hydraulic load requirement of said plurality of hydraulic fluid using devices.

18. The agricultural implement of claim **11**, wherein said signal is used by the tractor to alter a pressure of the hydraulic fluid supplied to said implement, thereby supplying said implement with hydraulic fluid at a pressure representative of said highest hydraulic load requirement.

19. The agricultural implement of claim **18**, wherein said plurality of hydraulic fluid using devices includes a fan motor and a seed drive motor.

20. The agricultural implement of claim **19**, wherein said signal represents a higher of a hydraulic load requirement of said fan motor and a hydraulic load requirement of said seed drive motor.

* * * * *