US009185539B2

(12) **United States Patent**
**Krampe**

(10) **Patent No.: US 9,185,539 B2**
(45) **Date of Patent: Nov. 10, 2015**

(54) **APPARATUS AND METHOD OF ESTABLISHING CREDIT ON A CASH REGISTER OR PRINTER**

(76) Inventor: **Richard L. Krampe**, Winter Park, FL (US)

( * ) Notice: Subject to any disclaimer, the term of this patent is extended or adjusted under 35 U.S.C. 154(b) by 1082 days.

(21) Appl. No.: **12/802,546**

(22) Filed: **Jun. 10, 2010**

(65) **Prior Publication Data**

US 2011/0153442 A1 Jun. 23, 2011

**Related U.S. Application Data**

(63) Continuation-in-part of application No. 12/653,741, filed on Dec. 18, 2009.

(51) **Int. Cl.**

| | |
|---|---|
| ***H04W 4/24*** | (2009.01) |
| ***G06Q 20/32*** | (2012.01) |
| ***G06Q 20/42*** | (2012.01) |
| *G06Q 20/20* | (2012.01) |

(52) **U.S. Cl.**

CPC ..... ***H04W 4/24*** (2013.01); ***G06Q 20/20*** (2013.01); ***G06Q 20/202*** (2013.01); ***G06Q 20/32*** (2013.01); ***G06Q 20/42*** (2013.01); ***G06Q 20/425*** (2013.01); *G06Q 20/204* (2013.01)

(58) **Field of Classification Search**

None

See application file for complete search history.

(56) **References Cited**

U.S. PATENT DOCUMENTS

| | | | | |
|---|---|---|---|---|
| 5,991,749 | A | 11/1999 | Morrill, Jr. | |
| 6,038,491 | A | 3/2000 | McGarry et al. | |
| 6,584,309 | B1 * | 6/2003 | Whigham | 455/414.1 |
| 7,039,389 | B2 | 5/2006 | Johnson, Jr. | |
| 7,072,854 | B2 | 7/2006 | Loeser | |
| 7,127,236 | B2 | 10/2006 | Khan et al. | |
| 7,164,884 | B2 | 1/2007 | Defosse et al. | |
| 7,213,742 | B1 | 5/2007 | Birch et al. | |
| 7,376,583 | B1 * | 5/2008 | Rolf | 705/17 |
| 7,575,377 | B2 | 8/2009 | Fick et al. | |
| 7,577,616 | B2 | 8/2009 | Zhu | |
| 2003/0023509 | A1 | 1/2003 | Rammig | |
| 2004/0030601 | A1 | 2/2004 | Pond et al. | |

* cited by examiner

*Primary Examiner* — Ryan Zeender
*Assistant Examiner* — Denisse Ortiz Roman
(74) *Attorney, Agent, or Firm* — William M. Hobby, III

(57) **ABSTRACT**

A method and system is provided for establishing credit on a cash register or printer. A currency amount is established on a cash register or printer in order to pay for a product or service using a cellular telephone, or other personal wireless communication device. The personal wireless communication device activates an applet, which may be downloaded at the site, to establish a link with a vending universal wireless interface (VUWI) coupled to the cash register or printer's microprocessor controller to establish a link with a remote server for authorizing credit for the payment of the transaction to complete a purchase by a consumer.

**17 Claims, 4 Drawing Sheets**

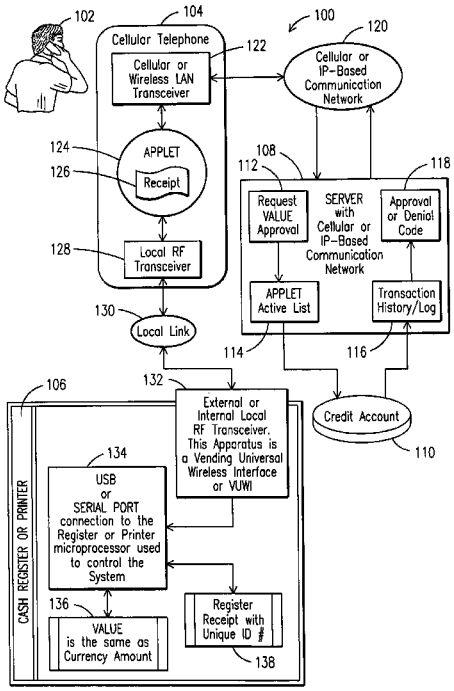

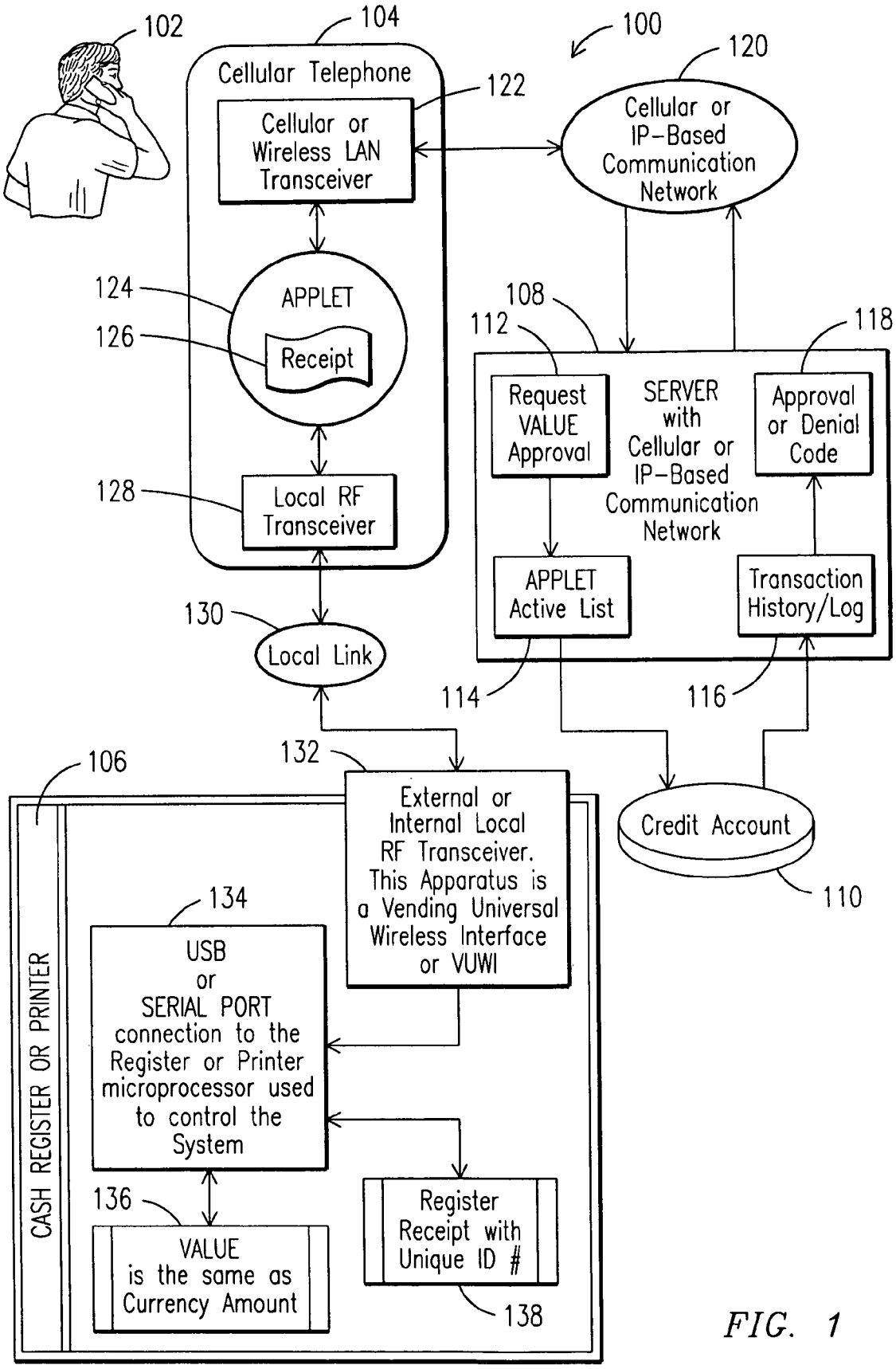
102
104
Cellular Telephone
Cellular or Wireless LAN Transceiver
122
100
120
Cellular or IP-Based Communication Network
124
APPLET
126
Receipt
108
112
118
Request VALUE Approval
SERVER with Cellular or IP-Based Communication Network
Approval or Denial Code
128
Local RF Transceiver
APPLET Active List
Transaction History/Log
130
Local Link
114
116
132
106
External or Internal Local RF Transceiver. This Apparatus is a Vending Universal Wireless Interface or VUWI
Credit Account
110
134
USB or SERIAL PORT connection to the Register or Printer microprocessor used to control the System
CASH REGISTER OR PRINTER
136
VALUE is the same as Currency Amount
Register Receipt with Unique ID #
138

FIG. 1

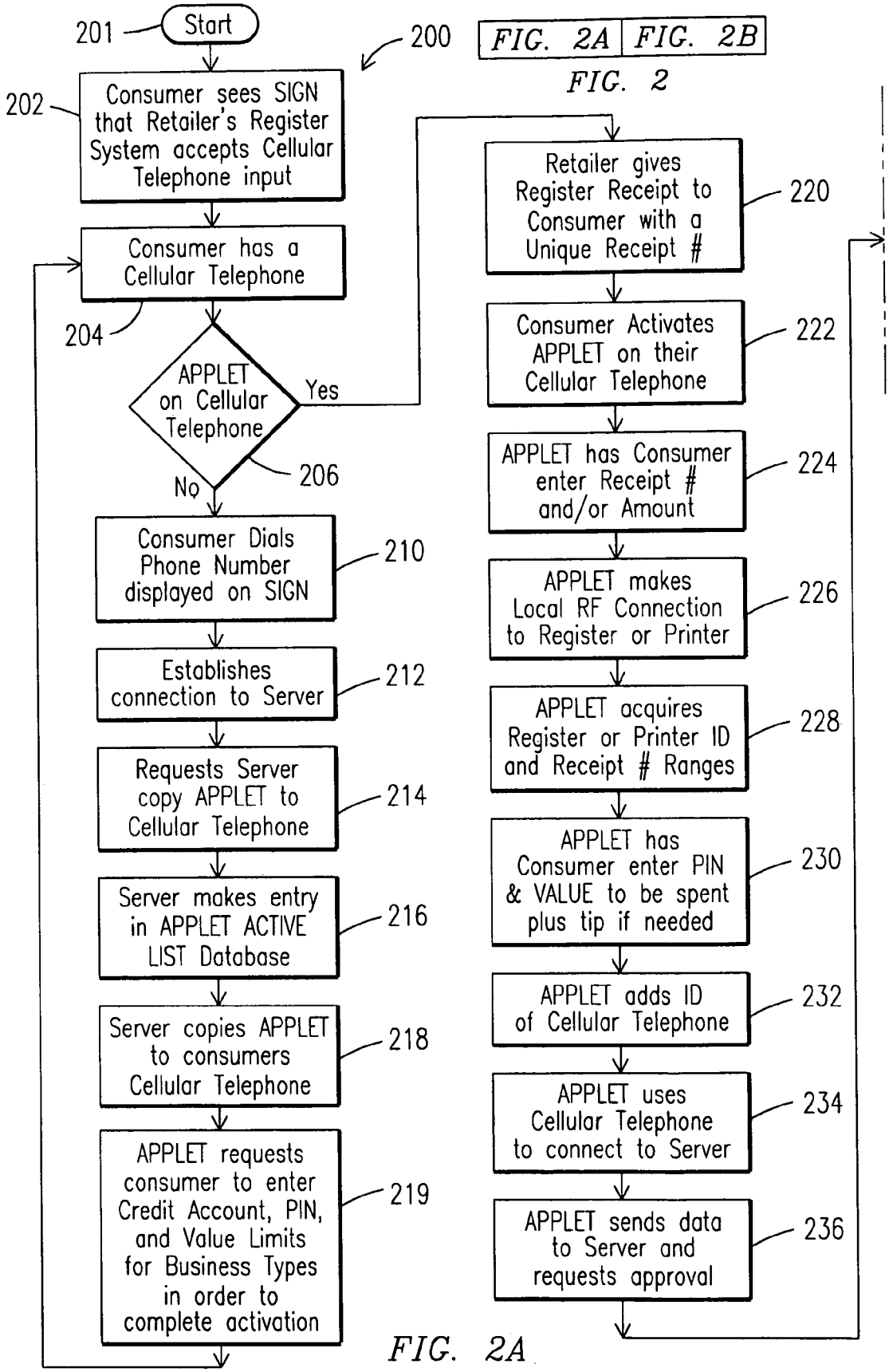
FIG. 2A
FIG. 2B
FIG. 2
200
201
Start
202
Consumer sees SIGN that Retailer's Register System accepts Cellular Telephone input
Consumer has a Cellular Telephone
204
APPLET on Cellular Telephone
206
Yes
No
Consumer Dials Phone Number displayed on SIGN
210
Establishes connection to Server
212
Requests Server copy APPLET to Cellular Telephone
214
Server makes entry in APPLET ACTIVE LIST Database
216
Server copies APPLET to consumers Cellular Telephone
218
APPLET requests consumer to enter Credit Account, PIN, and Value Limits for Business Types in order to complete activation
219
Retailer gives Register Receipt to Consumer with a Unique Receipt #
220
Consumer Activates APPLET on their Cellular Telephone
222
APPLET has Consumer enter Receipt # and/or Amount
224
APPLET makes Local RF Connection to Register or Printer
226
APPLET acquires Register or Printer ID and Receipt # Ranges
228
APPLET has Consumer enter PIN & VALUE to be spent plus tip if needed
230
APPLET adds ID of Cellular Telephone
232
APPLET uses Cellular Telephone to connect to Server
234
APPLET sends data to Server and requests approval
236

FIG. 2A

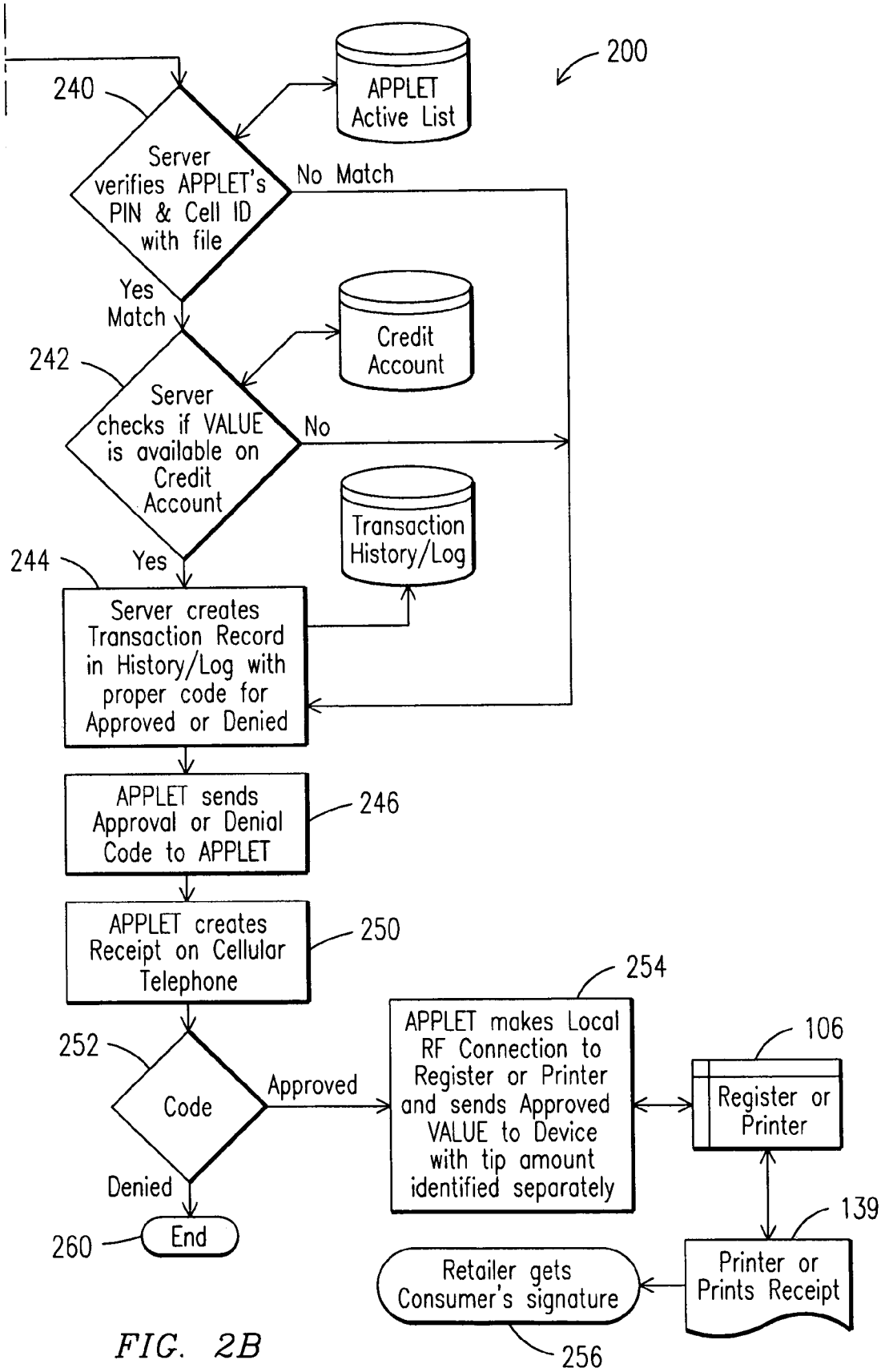
200
240
Server verifies APPLET's PIN & Cell ID with file
APPLET Active List
No Match
Yes Match
242
Server checks if VALUE is available on Credit Account
Credit Account
No
Transaction History/Log
244
Yes
Server creates Transaction Record in History/Log with proper code for Approved or Denied
APPLET sends Approval or Denial Code to APPLET
246
APPLET creates Receipt on Cellular Telephone
250
252
Code
Approved
Denied
260
End
254
APPLET makes Local RF Connection to Register or Printer and sends Approved VALUE to Device with tip amount identified separately
106
Register or Printer
139
Printer or Prints Receipt
Retailer gets Consumer's signature
256

FIG. 2B

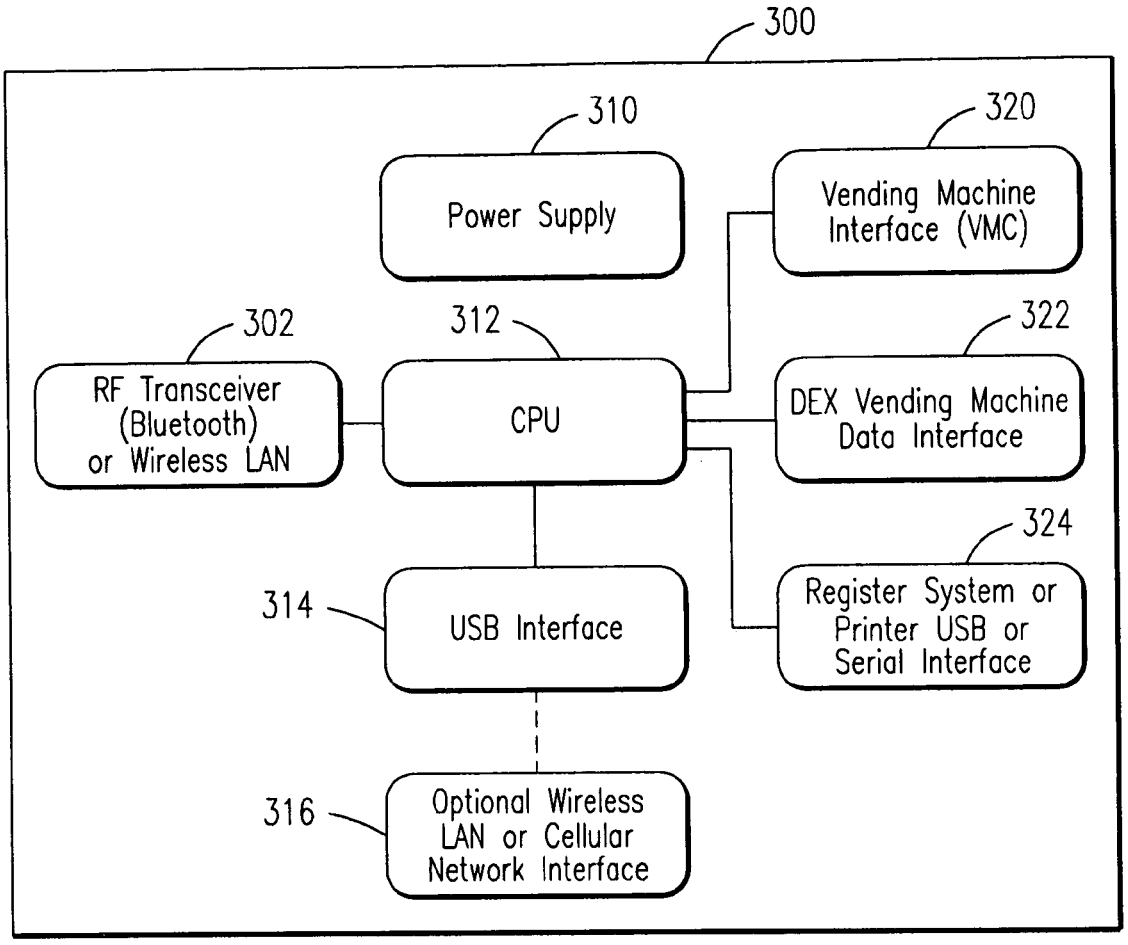
300
310
Power Supply
320
Vending Machine Interface (VMC)
302
RF Transceiver (Bluetooth) or Wireless LAN
312
CPU
322
DEX Vending Machine Data Interface
324
Register System or Printer USB or Serial Interface
314
USB Interface
316
Optional Wireless LAN or Cellular Network Interface

*FIG. 3*

# APPARATUS AND METHOD OF ESTABLISHING CREDIT ON A CASH REGISTER OR PRINTER

This application is continuation-in-part of U.S. patent application Ser. No. 12/653,741, filed Dec. 18, 2009 for Method of Establishing Credit on a Vending Machine.

## FIELD OF THE INVENTION

The present invention relates to establishing credit on a Cash Register or Cash Register System or by creating a credit/debit card receipt on a printer. The cash register can establish a currency amount on a Cash Register or Cash Register System while the printer can create a credit/debit card receipt on a printer in order to pay for a product or services using a cellular telephone, or other personal wireless communication device, using an applet placed on the personal wireless communication device that can communicate with a vending universal wireless interface (VUWI) device. The VUWI has its Serial or USB port connected to the Serial or USB port of a Cash Register or Cash Register System or printer in order to interface with the microprocessor or with software being executed by the Cash Register or printer microprocessor controller.

## BACKGROUND OF THE INVENTION

Cash Registers and Cash Register Systems have become commonplace in retail establishments which offer consumers a variety of products and services which the consumer must pay for using either currency or credit. The Cash Registers and Cash Register Systems become the temporary repository of whatever coins, paper currency, account credit vouchers, credit cards receipts, and debit card receipts used by the consumer to pay for the products or services offered by a retailer.

Cash Register and Cash Register Systems, hereinafter referred to as Registers or Cash Registers, that accept credit cards and debit cards generally require an online or dial-up connection from the Register to the credit or debit card issuer, merchant bank or to a gateway service offering credit or debit card processing services. Any of these approaches can be used to verify the availability of funds or credit and thereby authorize the completion of the transaction at the Register. The online or dial-up connection to the Register must be secure and must generally be a dedicated connection that is available on demand to insure satisfactory transactions in terms of speed and reliability.

Cash Registers that accept credit cards often require the customer to surrender their credit card to an attendant, waiter, waitress, bartender, or other retail sales person in order to have the card swiped into the business' register system. This often puts the consumer's credit card out of direct visual contact and presents an opportunity for fraudulent use or misappropriation of the consumer's credit card or the information contained thereon.

A personal wireless communication device includes not only cell phones but also a personal digital assistant (PDA), IPOD, IPHONE, Smartphone, laptop computer or other similar personal wireless communication device, which can be used to communicate with a remote server.

In the past there have been attempts to vend or sell products or services without using cash but these have been primarily concerned with the use of credit cards in which the vending machine or cash register has a connection to the world wide internet or some other communication to approve the use of



the credit card. One prior system as disclosed in the Whigham U.S. Pat. No. 6,584,309 is for a method of authorizing the purchase of a product from an automatic vending machine by means of a consumer's cellular telephone. In this system the consumer uses a cellular phone to request a product from a vending machine by dialing a specified telephone number to connect the consumer's phone to a server operated by a billing agency. The server identifies the product and creates a request for purchase of the product and a transaction record and sends a "vend code" to the consumer's cell phone, which allows the consumer to purchase the product.

Other systems using cellular telephone or wireless communication devices may be seen in the Johnson, Jr. U.S. Pat. No. 7,039,389, for a cellular telephone-based retail transaction system for dispensing fuel and in the Carapelli U.S. Pat. No. 7,574,377, for a vending system for vending to purchasers having cellular phones or the like enabled to a wireless internet connection for communication over the internet. The Zhu U.S. Pat. No. 7,577,616, provides for a method for secure authentication or electrical payment utilizing a random ID verification method through a mobile communication tool. U.S. Pat. No. 5,991,749, teaches a wireless telephony for collecting tolls, conducting financial transactions, and authorizing other activities. U.S. Pat. No. 7,164,884 uses a wireless interface module to interface with a vending machine control system to allow communication between vending machines and a wireless network by coupling a transceiver to the wireless interface module. The Khan et al U.S. Pat. No. 7,127,236 is for a micropayment financial transaction process utilizing wireless network processing while the McGarry et al. U.S. Pat. No. 6,038,491, is for a monitoring and reporting system using a cellular carrier.

Other prior U.S. patents include the Morrill, Jr. U.S. Pat. No. 5,991,749 for a wireless telephony for collecting tolls, conducting financial transactions, and authorizing other activities and the Birch et al. U.S. Pat. No. 7,213,742 for a fuel dispensing system having a plurality of fuel dispensers capable of conducting a fueling transaction using a customer's cellular telephone. Also, the Loeser U.S. Pat. No. 7,072,854 for a Payment System by Means of a Mobile Device and the Pond et al. Patent Application Publication U.S. 2004/0030601 for Ele4ctronic Payment Methods for a Mobile Device and the Ramming U.S. Patent Publication Number U.S. 2003/0023509 for Method For Selecting and Paying for Items with a Mobile Terminal and in U.S. Patent Publication No. U.S. 2008/0035724 to Vawter for Transaction Information Mining.

My prior U.S. patent application Ser. No. 12/653,741 is for a Method of Establishing Credit on a Vending Device and establishes a currency amount on a vending machine in order to obtain a product or service using a cellular telephone or personal wireless communication device, using an applet placed on the personal wireless communication device that can communicate with a vending universal wireless device placed on the vending machine.

The present invention relates to a Vending Universal Wireless Interface (VUWI); which includes Bluetooth, Wi-Fi, Wireless LAN or other RF Transceiver with outputs that can be connected to the USB or Serial Port of a cash register or cash register system or printer microprocessor controller in order to interface with the microprocessor or with software being executed by the cash register or printer's microprocessor. The VUWI contains a power supply, a microprocessor, an RF Transceiver using either Bluetooth, Wi-Fi, Wireless LAN or other RF Transceiver protocols, as well as physical connector outputs. The VUWI can be connected to a Register or printer's microprocessor controller in order to interface with

the microprocessor or with software being executed by the cash register or printer's microprocessor to execute a credit transaction on the register or to create a printed credit/debit card receipt on the printer.

## SUMMARY OF THE INVENTION

A method of executing a transaction on a Cash Register or Cash Register System or printer, by a consumer using a cellular phone or other wireless personal communication device by the consumer activating an applet on the cellular telephone to establish a wireless link with a cash register or a printer having a vending universal wireless interface device attached thereto. A wireless link is established between the wireless personal communication device and a computer server for transmitting a request from the wireless communication device to the computer server for approval of a transaction for use on the cash register or printer. The computer server determines the credit availability of the transmitted request and generates a transaction record from the transmitted request and transmits a response from the computer server to the personal communication device authorizing a predetermined transaction for use on the cash register or printer upon credit authorization of the transaction. The personal communication device then communicates the transaction approval to the vending universal wireless interface (VUWI) which in turn communicates the approved amount to the cash register to pay for the product or services or to the printer to print a credit/debit card receipt for the product or service.

A system for establishing credit on a cash register or for printing a credit/debit card receipt for use on a cash register by a consumer using the consumer's cellular phone or wireless communication device uses a vending universal wireless interface coupled to the cash register or printer microprocessor controller. The wireless communication device has a local transceiver and an applet thereon for communication between the personal wireless communication device and the register or printer vending universal wireless interface. A remote computer server is linkable with the personal wireless communication device for receiving requests from the personal communication device for approval of a transaction on the cash register or receipt amount to be printed by the printer. The remote server is adapted to respond to approval for a register purchase or printer's receipt request and for instituting the creation of a transaction record from the request.

An apparatus and method is provided for establishing credit on a cash register, by printing credit/debit card receipt, by means of a software Applet running on a consumer's cellular telephone and an vending universal wireless interface (VUWI) attached to the cash register or to the printer. If the consumer does not have the Applet, they can request a copy by dialing a specified telephone number which connects the consumer's cellular telephone to a server which is able to download the Applet to the consumer's cellular telephone. If the cash register or printer does not have the VUWI attached, then communication between the consumer's cellular telephone and the cash register is not possible until the cash register or printer has the VUWI attached to the USB or serial port thereof.

If the cash register or printer has the VUWI and if the consumer has the Applet and wishes to obtain approval of a transaction on a cash register or print a credit/debit card receipt, the consumer activates the Applet on their cellular telephone. The Applet then requests the consumer to enter on the keyboard of the cellular telephone the cash register receipt number or the receipt number and the amount that the consumer wishes to pay. The Applet establishes contact with the cash register or printer through the VUWI in order to secure its identity and a copy of the cash register receipt for products or services that is to be paid or the printer owner's merchant account ID and receipt number ranges. The Applet then requests that the consumer enter on the keyboard of the cellular telephone any tip amount, if appropriate, that is to be added to the cash register receipt or receipt amount and then the total amount to be spent as well as a personal identification number (PIN), which the Applet forwards to a server for approval. The server recognizes the request for approval and verifies that the requesting Applet has the correct cellular telephone identification and the correct consumer PIN as well as a correct Register identity or printer identity. The server then checks the consumer's credit account for available funds. The server then creates a transaction record for its history log and communicates an approval or denial code to the Applet on the consumer's cellular telephone. The Applet stores a receipt on the consumer's cellular telephone and displays the approval or denial status of the request on the consumer's cellular telephone's display screen. The Applet communicates the transaction approval or denial to the cash register or printer through the VUWI. If the communication is with a printer, the printer prints a credit/debit card receipt and the consumer signs the receipt. If the communication is with a cash register, the consumer then gets the merchant or retailer to print a new copy of the cash register receipt and completes the payment by signing, if necessary, the new register receipt.

## BRIEF DESCRIPTION OF THE DRAWINGS

Other objects, features and advantages of the present invention will be apparent from the written description and the drawings in which:

FIG. **1** is a diagram of the present system for establishing currency amount on a Cash Register or by printing a credit/debit card receipt using a cellular telephone;

FIG. **2** is a flow chart of the present method of establishing a currency amount on a Cash Register or by printing a credit/debit card receipt using a cellular telephone; and

FIG. **3** is a block diagram of the Vending Universal Wireless Interface (VUWI) that is attached to a Cash Register or to a printer that allows the establishing of a currency amount on the Cash Register or by printing a credit/debit card receipt using a cellular telephone.

## DETAILED DESCRIPTION OF THE EXEMPLARY EMBODIMENTS

An exemplary embodiment of the present invention will hereinafter be described with reference to the drawings, in which like numerals indicate like elements throughout the drawing figures.

The present invention is a method and system for establishing a currency value on a Cash Register or Cash Register System, referred to herein as a "register" or "cash register", or having a printer, at a retailer's location, print a credit/debit card receipt for payment of goods and services, by using the consumer's cellular telephone equipped with Bluetooth, Wi-Fi, wireless LAN or other RF communication capabilities. The cellular telephone may be in the form of a cellular telephone, a personal digital assistant (PDA), IPOD, IPHONE, Smartphone, Laptop computer or similar personal wireless communication device, hereinafter collectively called "cellular telephone" or "personal wireless communication device", as a link between the consumer, the register or printer and a server supported credit account. The server is a general purpose digital computer system capable of receiving input from

and providing output to a cellular or IP-Based communication network and may be operated by the consumer's telephone company, by the consumer's bank, by the consumer's credit or debit card issuer, by a retail outlet offering credit and/or gift and/or loyalty accounts to the consumer, by a merchant bank or gateway service provider offering credit and/or debit card processing services on behalf of the consumer's telephone company, the consumer's bank, the consumer's credit or debit card issuer, or a retail outlet offering credit and/or gift and/or loyalty accounts to the consumer hereinafter collectively called "server". The server supported credit account may be an account held by the consumer with the consumer's telephone company; with the consumer's bank, with the consumer's credit or debit card issuer; with a retail outlet offering credit and/or gift and/or loyalty accounts to the consumer hereinafter collectively called "credit account". In addition, the credit account can be a mobile wallet supported on the consumer's cellular telephone.

FIG. **1** shows the system **100** of the present invention. System **100** is configured to allow a consumer **102** to load a transaction amount **136** to a cash register or printer **106**. For the purposes of this invention, the term "value" means the currency amount available to the consumer **102** through the register or printer **106**. System **100** has a cash register or printer **106** having an external or internal Bluetooth, Wi-Fi, wireless LAN or other RF transceiver hereinafter collectively referenced as a Vending Universal Wireless Interface (VUWI) **132** and a cellular telephone **104** associated with a consumer **102** which has a local RF Transceiver **128** and a cellular or wireless LAN transceiver **122**, and a remote server **108**.

The consumer's cellular telephone **104** is connected to the register or printer **106** via the cellular telephone's local RF transmitter **128**, local communication link **130**, which is a short range RF communication link, and the VUWI **132** connected to the register or printer **106**. The consumer's cellular telephone **104** is also connected to the server **108** via the cellular telephone's cellular or wireless LAN transceiver **122** and the cellular or IP-based communication network **120**. The cellular or IP-based communication network **120** allows the consumer **102** to use their cellular telephone **104** to establish a connection with server **108**.

When a consumer **102** is ready to pay for products or services provided by a retailer or merchant, three possibilities exist. First, the cash register or printer **106** does not have the ability to accept a currency amount from a cellular telephone **104** and there is no action possible in connection with this invention. Second, the cash register or printer **106** can accept currency amount from a cellular telephone **104** but the consumer **102** does not have the required Applet **124** on their cellular telephone **104**. If the consumer **102** decides to download the Applet **124** he follows the following procedure. The consumer **102** calls the telephone number displayed on or near the cash register or printer **106** in order to connect to the server **108**. Once the consumer dials the displayed number and the call is received by the server **108**, the server **108** makes an automated verbal request through the consumer's cellular telephone **104** for confirmation from the consumer that they wish to download an Applet **124** to be used for making cashless payments. The consumer can respond by pressing a particular key or keys on the keyboard of the cellular telephone **104** or by answering "Yes" verbally over the cellular telephone **104**. If the correct key or keys are pressed or the verbal response of "Yes" is provided the server **108**, the server downloads the Applet **124** and verbally tells the consumer to follow the activation directions on the display screen of the cellular telephone **104** that will be provided by the Applet **124**. Once activated, the consumer **102** can use the Applet **124** for making cashless purchases on a cash register or retailer's printer **106**. If the correct key or keys are not pressed or the verbal response of "Yes" is not provided, the server **108** hangs up ending the call.

Third, the register or printer **106** can accept a currency amount from a cellular telephone **104** and the consumer **102** has the required Applet **124** on their cellular telephone **104**. If the consumer **102** decides to make a cashless payment at the register or using the retailer's printer **106**, the consumer follows the following procedure. The consumer **102** activates the Applet **124** on their cellular telephone **104**. The Applet **124** will request that the consumer **102**, after reviewing a preliminary copy of the cash register receipt **138**, enter the unique receipt number contained thereon and/or the total amount to be spent into the Applet screen using the cellular telephone's keyboard. Then, the Applet **124** using the cellular telephone's local RF Transceiver **128** connects to the cash register or printer VUWI, **132** establishing a two-way communication link **130** between the cellular telephone **104** and the cash register or printer **106** controller. The Applet **124** acquires from the register or printer's microprocessor **134** the cash register or printer **106** identification information and a copy of the cash register receipt **138** identified by the unique cash register receipt number provided by the consumer **102** or the retailer's receipt number series from the printer **106** and transfers this information to the cellular telephone **104** and displays for cash registers **106** the cash register receipt **138** with its receipt number and/or the amount spent or for printers **106** the retailer's ID information, and the retailer's receipt number series plus the amount to be spent on the cellular telephone's display screen. The consumer **102** can then review for cash registers **106** the cash register receipt and the amount to be spent or for printers **106** the retailer's ID information and the amount to be spent on the cellular telephone's **104** display screen. For printers **106** if the Retailer's ID is correct the consumer **102**, using the cellular telephone's **104** keyboard enters the base amount and any tip amount to be spent with this retailer and then continues with the next paragraph. For cash registers **106**, if the receipt information and amount are acceptable the consumer **102** follows the instructions provided by the Applet **124** on the cellular telephone's display screen and using the cellular telephone's keyboard enters, if appropriate, any tip they wish to have added to the register receipts product or services total.

The Applet **124** will then display the total owed the retailer or merchant for the displayed base amount plus tip and ask the consumer **102** to either accept or reject the total amount shown. If rejected the Applet **124** redisplays the register receipt or retailer's ID and allows the consumer **102** to either cancel the transaction or to re-enter any amount or tip value and continue with the transaction.

If accepted, the Applet **124**, using the cellular telephone's **104** cellular or wireless LAN transceiver **122** establishes a two-way communications link using the cellular or IP-based communication network **120** with the server **108**. The server **108** uses the two-way communication link to established via the cellular or IP-based communication network **120** data from the Applet **124** along with the identification information of the cellular telephone **104** and the identification information of the register or printer **106** and the tip value added to the register receipt and the total value **136** requested by the consumer **102** in approving the credit for the register or printer **106**. The server **108** processes the request for approval **112** of the value **136** requested by the consumer **102** by referencing the consumer **102** server supported credit account **110**, which it controls, either directly or indirectly. Once the server **108**

has checked for the availability of total value **136** on the consumer's credit account **110** the server **108** generates an approval or denial code **118** and further creates a transaction record **116** as a history or log of the activity which includes the details about the request including the cellular telephone **104** identification information, the consumer's confirmation or identification information such as a personal identification number (PIN), the cash register or printer **106** identification information, the total value **136** to be authorized, the amount of the tip that was added to the cash register receipt, the time and date of the request and finally the approved or denied code.

The approval or denial code **118** is communicated to the consumer **102** via the cellular or IP-based communication network **120** and the consumer's cellular telephone **104**. The approval code **118**, the tip amount and the total value **136** as approved for use on the register or printer **106** is in-turn transmitted to the register or printer **106** via the cellular telephone's **104** local transmitter **128** using the local link **130** which is received by the register or printer **106** VUWI **132** which in turn informs the register or printer **106** microprocessor controller **134** of the approval code **118**, tip amount and the overall total value **136** the consumer **102** has made available to complete the payment process. The cash register or printer's microprocessor controller **134** receives approval code **118**, the tip amount and the overall total value **136** and upon request can print a new updated register receipt **138** for the consumer or can print a credit/debit card receipt **139** for the retailer or merchant. The retailer or merchant then presents the new updated register receipt **138** for the consumer or prints the credit/debit card receipt **139** for the retailer or merchant. The retailer or merchant then presents the register receipt to the consumer **102** and if appropriate secures the consumer's **102** signature on the final cash register receipt or on the credit/debit card receipt **139**.

It should be noted that in accordance with the system of the present invention, there is no dedicated communication link required between the cash register or printer **106** and the server **108** that authorizes the payment on the cash register or the printing of a credit/debit card receipt **139** by the printer. In addition, the consumer **102** was never required to present or be physically separated from their credit or debit card.

Turning to FIG. **2**, a method **200** allows the consumer **102** to establish credit or value **136** on a cash register or printer **106** by using their cellular telephone **104**. Using the established credit or value **136**, the consumer **102** is able to pay for products or services at any cash register **106** equipped with a VUWI **132**. The method **200** begins at step **201** and proceeds to step **202** when the consumer sees a register or printer that accepts a cellular telephone input. At step **202**, the consumer **102** sees a register or printer **106** that accepts a cellular telephone **104** input of credits or value **136** as payment for products or services. Information displayed on or adjacent to the register or printer **106** provides instructions for using the consumer's cellular telephone **104** to establish credit on the cash register or by securing a printed credit/debit/card receipt from a printer.

The instructions include a telephone number to call for downloading of an Applet **124** that will run on the consumer's cellular telephone **104** and allow the consumer **102** to establish credit or value **136** on the cash register or printer **106**. If the consumer **102** already has the Applet **124** on their cellular telephone **104**, the method proceeds to step **220** to where consumer **102** acquires a copy of the cash register receipt **138** containing a unique receipt number and details of their purchase. Otherwise at step **210**, the consumer **102** dials the number displayed on the sign to make a telephone connection between the cellular telephone **104** and the server **108** via cellular or IP-based communication network **120**. A connection is made with the server **108** at step **212** over the cellular or IP-Based communication network **120**. The consumer **102** requests, in step **214**, that the server **108** download the Applet **124** to their cellular telephone **104**. The server **108** in step **214** makes an entry into its Applet active list **114** and the server **108** in step **218** downloads the Applet **124** to the consumer's cellular telephone **104** and instructs the consumer to follow the instructions displayed on their cellular telephone **104**. The Applet in step **219** asks the consumer **102** to input a credit account number, its expiration date and its card verification value (CVV) code, which credit account will be used when paying for products or services at a retailer. The Applet **124** also requests entry of dollar limits to be associated with various types of retailers **106** and a personal identification number (PIN) to be used when using the Applet **124** to pay for products or services at a retailer.

Once the Applet **124** requests have been answered and entered by the consumer **102** on the cellular telephone's keyboard, the Applet **124** contacts the server **108** and uploads the information to the server **108** to store in the Applet active list **114**. All of the information entered to the Applet **124** is cleared from and not stored on the cellular telephone **104**. If the consumer **102** has the Applet on their cellular telephone **104** the consumer **102** moves to step **220** to begin the payment process.

If the Applet **124** is on the consumer's cellular telephone **104**, the consumer **102** then acquires a copy of the cash register receipt **138** from the retailer which receipt contains a unique receipt number in step **220** and then the consumer **102** in step **222** activates the Applet **124** on the cellular telephone. The Applet **124** in step **224** has the consumer **102** enter the unique register receipt number from the cash register receipt **138** and/or the total amount to be spent as shown on the register receipt using the cellular telephone's **104** keyboard and then the Applet **124** in step **226** makes a connection to the cash register or printer **106**, equipped with a VUWI **132**, using the cellular telephone's local RF transceiver **128** and the local link **130**. Once the connection is established between the Applet **124** and the cash register or printer **106** in step **228**, the Applet **124** acquires the cash register or printer's identification information and in the case of a cash register, a copy of the register receipt **138** which contains information about the products or services the consumer **102** is about to pay for using their cellular telephone **104**. In the case of communication with a printer, the Applet **124** acquires the retailer's receipt number series. The Applet **124** then displays this register receipt with the retailer's ID information, the receipt number and the amount to be spent on the consumer's cellular telephone's **104** display screen and requests in step **230** that the consumer **102** enter their personal identification number (PIN), and a tip amount, if needed, using the cellular telephone's **104** keyboard and then a new receipt total is displayed for the consumer **102**. The consumer **102** is asked to accept or reject the new total. If rejected the preliminary transaction is canceled. If accepted, the Applet **124** in step **232** adds the ID of the cellular telephone **104** and continues in step **234** using the cellular telephone's **104** cellular or wireless LAN transceiver **122** to make a connection through the cellular or IP-based communication network **120** with the server **108**. Once the connection is established in step **234**, the Applet **124** in step **236** transfers the consumer's personal identification number (PIN) and the cellular telephone's identification information and the register's or printer's **106** identification information, along with the tip amount, if any, and the total value **136** requested by the consumer **102** to the

server **108** and requests approval for the transaction. The server **108** in step **240** checks to make sure the Applet **124** making the request is coming from the consumer **102** and cellular telephone **104** that the server **108** currently associates with the Applet **124**.

The server **108** in step **240** compares the transmitted consumer identification number (PIN) and the cellular telephone's identification information with the data it has stored on its Applet active list **114**. If the information matches the server **108**, it continues with step **242** to check if the value is available on the consumer's credit account. The server **108** checks in step **242** to see if the value **136** requested by the consumer **102** is available on the consumer's credit account **110**. The server **108** then continues with step **244** where it creates a transaction record to be placed in the transaction history log **116**. Based on the results of the two tests it made in steps **240** and **242**, the server also attaches an Approved or Denied code to the transaction record. The server **108** in step **246** sends an approval or denial code to the Applet **124**.

The Applet **124** in step **250** creates a receipt for reference by the consumer **102** on the consumer's cellular telephone **104**. The Applet **124** in step **252** checks the Approved or Denied Code sent by the server **108** and if the transaction was denied the Applet **124** displays a request denied message to the consumer **102** on the consumer's cellular telephone's **104** display screen and the transaction is ended.

If the transaction is approved, the Applet **124** in step **254** establishes contact with the cash register or printer **106** using the cellular telephone's local RF transceiver **128** through the local link **130** to establish a connection to the cash register or printer **106** through its VUWI **132** and communicates the tip amount, if any, the Approved or Denied Code **118** and the approved total value **136** to the VUWI **132** which in turn sends the value **136** to the cash register or printer's microprocessor controller **134**. The register or printer **106**, through its microprocessor controller **134**, accepts the payment and provides the retailer with an updated register receipt **138** or if communicating with a printer, prints a credit/debit card receipt **139** which the retailer can provide to the consumer **102** for his signature, if necessary, and then uses the credit/debit card receipt **139** as payment for the products or services.

The credit account **110** used herein and supported by the server **108** may be an account held by the consumer with the consumer's telephone company; with the consumer's bank, with the consumer's credit or debit card issuer; with a retail outlet offering credit and/or gift and/or loyalty accounts to the consumer or be credit held as part of a mobile wallet on the consumer's cellular telephone.

FIG. **3** is a block diagram of the vending universal wireless interface (VUWI) **300** of the present invention. The VUWI **300** is designed to allow a consumer's cellular telephone **104** to communicate locally with a cash register or printer **106**. The VUWI **300**, also referenced as VUWI **132** in the system **100**, provides an interface between the cellular telephone **104** and the cash register or printer **106** microprocessor controller **134** to transfer value **136**.

The VUWI **300** consists of several subsections controlled by the CPU **312**. The transceiver **302** provides the local link **130** to the cellular telephone **104** for customer interface and optionally WAN access **120** to the server **108**. The power supply **310** can either modify the power supplied by the cash register or printer **106** or can be an external power supply or an A/C Adaptor for the VUWI **300**. A USB Interface **314** allows the plug-in and removal optional WAN to access devices such as an optional WAN Link **316** to provide direct reporting of the VUWI **300** status. The (VMC) Vending Machine Interface **320** enables the CPU **312** to transfer the value **136** to the controller **134**. The DEX vending machine data interface **322** provides optional data collection of vending device status information. The register system or printer USB or Serial Interface **324** enables the CPU **312** to transfer the value **136** to the microprocessor controller **134** of any register or printer **106**.

Normal operation of vending universal wireless interface (VUWI) **300** is as follows. The cash register or printer **106** or an external power supply or an A/C Adaptor provides power to the Power Supply **310** that in turn will provide power to all other components of VUWI **300**. The CPU **312** will initialize the transceiver **302**, USB interface **314**, vending machine interface **320** and any optional interfaces attached such as optional WAN link **316** and the DEX vending machine data interface **322**. The CPU **312** sets the transceiver **302** to make itself available to establish connections to cellular telephones **104**. A customer **102** establishes a connection with transceiver **302** through a cellular telephone **104** by activating the Applet **124**. The CPU **312** provides machine identification information to the Applet **124** running on the cellular telephone **104** over the transceiver **302** and the local link **130**. Optionally the CPU **312** can also provide data collected by DEX vending machine data interface **322** to the Applet **124** running on the cellular telephone **104** by transceiver **302** and the local link **130**. The Applet **124** requests, on the cellular telephone's display screen, that the consumer enter value **136** to be spent on the register or printer **106** using the cellular telephone's **104** keyboard. The Applet **124** then sends a request for approval along with all other data details to the server **108** for authorization over the cellular telephone's **104** cellular or wireless LAN transceiver **122** over the cellular or IP-based communications network **120**. The server **108** then processes the request and responds to the Applet **124** running on the cellular telephone **104**. If the Applet **124** detects that the request was approved it will communicate the approved value **136** to the register or printer **106** over the cellular telephone's local RF transceiver **128** through the local link **130** to the register or printer's transceiver **302**, which will in turn transfer the value **136** to the CPU **312**. The CPU **312** transfers the value **136** to the register's microprocessor controller **134** using the register system interface **324**. The microprocessor **134** will then handle the payment by the consumer **102** as if the consumer **102** had actually swiped a credit/debit card to make the payment.

The system **100** and method **200** using the VUWI **300** of the present invention allows the consumer **102** to establish a currency amount on a cash register or printer **106** in order to pay for products or services without using currency or a credit card but by only using a cellular telephone **104** which through the VUWI **300** is able to communicate with the cash register or printer **106**. Thus, the system **100** and method **200** using the VUWI **300** of the present invention eliminates the need for in pocket currency or for a dedicated communication link between the cash register or printer **106** and a credit account **110**.

It should be clear at this time that the present invention eliminates the need for in pocket currency or in hand credit/debit cards for paying for purchases at a cash register and also eliminates the need for a dedicated online or dial up connection between the register or register and a server supported credit account by using a consumer's personal communication device equipped with RF communication capability. In addition, the consumer is not required to relinquish control over their credit/debit card thus elimination the possibility of fraudulent use of the credit/debit card or its information while out of the hands of the consumer or in the hands of a third party. The process can be implemented by the addition of

Vending Universal Wireless Interface (VUWI) to a cash register or printer microprocessor using a USB or serial port and with the addition of an Applet to an existing cellular phone or the like. However the present invention is not to be construed as limited to the forms shown which are to be considered illustrative rather than restrictive.

I claim:

**1**. A method of executing a transaction on a cash register or printer by a consumer comprising:

selecting a cash register or printer having a microprocessor controller therein and having a Vending Universal Wireless Interface (VUWI) coupled thereto;

activating an applet on a personal wireless communication device to establish a wireless two-way link with said cash register or printer coupled VUWI;

communicating between said personal wireless communication device and said VUWI to acquire information therefrom;

establishing a wireless link between said personal wireless communication device and a remote computer server;

transmitting information acquired from said cash register or printer by said personal wireless communication device to said remote computer server along with a request for credit approval for a transaction;

transmitting a credit approval response from said remote computer server to said personal communication device for a transaction when such credit is approved;

transmitting said credit approval from said personal wireless communication device to said cash register or printer VUWI; and

activating said cash register or printer to pay for a product or service;

thereby eliminating the need to use currency, or to surrender one's credit card to a third party, or for a dedicated connection between a cash register and a remote computer server in making a credit payment on a cash register or printer.

**2**. The method of executing a transaction on a cash register or printer by a consumer in accordance with claim **1** in which the selected cash register or printer coupled VUWI is coupled through the cash register or printer USB port.

**3**. The method of executing a transaction on a cash register or printer by a consumer in accordance with claim **1** in which the selected cash register or printer coupled VUWI is coupled through the cash register or printer serial port.

**4**. The method of executing a transaction on a cash register or printer by a consumer in accordance with claim **1** including the step of downloading the applet on a users personal wireless communication device prior to activating said applet.

**5**. The method of executing a transaction on a cash register by a consumer in accordance with claim **4** including the step of acquiring an amount owed for a register receipt from said cash register by said personal wireless communication device for transmission to said remote computer server.

**6**. The method of executing a transaction on a cash register or printer by a consumer in accordance with claim **4** including the step of acquiring the users cellular telephone identification by said applet for transmission to said remote computer server.

**7**. The method of executing a transaction on a cash register or printer by a consumer in accordance with claim **6** including the step of dialing a posted telephone number for downloading said applet.

**8**. The method of executing a transaction on a cash register or printer by a consumer in accordance with claim **7** including the step of said remote server verifying said personal wireless communication device identification and personal identification information upon receipt of a request from said personal wireless communication device.

**9**. The method of executing a transaction on a cash register or printer by a consumer in accordance with claim **8** including the step of said remote computer server generating an approval or denial response to said personal wireless communication device.

**10**. A system for executing a transaction on a cash register or printer by a consumer using the consumer's personal wireless communication device comprising:

a cash register or printer having a vending universal wireless interface (VUWI) coupled to said cash register or printer microprocessor controller;

a personal wireless communication device having a local transceiver and having an applet thereon for communication between said personal wireless communication device and said vending universal wireless interface; and

a remote computer server linkable with said personal wireless communication device for receiving requests from said personal wireless communication device for approval of a transaction on said cash register or printer, said remote computer server being adapted to respond to approval for credit to complete a transaction.

**11**. The system for executing a transaction on a cash register by a consumer using the consumer's personal wireless communication device in accordance with claim **10** in which said vending universal wireless interface is coupled to said cash register or printer USB port.

**12**. The system for executing a transaction on a cash register by a consumer using the consumer's personal wireless communication device in accordance with claim **10** in which said vending universal wireless interface is coupled to said cash register or printer serial port.

**13**. The system for executing a transaction on a cash register by a consumer using the consumer's personal wireless communication device in accordance with claim **10** in which said personal communication device is a cellular telephone.

**14**. The system for executing a transaction on a cash register by a consumer using the consumer's personal wireless communication device in accordance with claim **10** in which said vending universal wireless interface includes an RF transceiver.

**15**. The system for executing a transaction on a cash register by a consumer using the consumer's personal wireless communication device in accordance with claim **10** in which personal wireless communication device applet includes means for setting up a communication link with said vending universal wireless Interface and acquiring cash register identification information therefrom.

**16**. The system for executing a transaction on a cash register by a consumer using the consumer's personal wireless communication device in accordance with claim **15** in which said cash register is a cash register for accepting payments for products or services rendered.

**17**. A method of executing a transaction on a printer by a consumer comprising:

coupling a Vending Universal Wireless Interface (VUWI) to a printer microprocessor controller;

activating an applet on a personal wireless communication device to establish a wireless two-way link with said printer coupled VUWI;

communicating between said personal wireless communication device and said VUWI to acquire information from said printer;

establishing a wireless link between said personal wireless communication device and a remote computer server;

transmitting information acquired from said printer by said personal wireless communication device to said remote computer server along with a request for credit approval for a transaction;

transmitting a response from said remote computer server to said personal communication device authorizing a predetermined credit approval for a transaction when such credit is authorized;

transmitting said credit approval from said personal wireless communication device to said printer VUWI; and

activating said printer to print a credit/debit card receipt.

* * * * *