US009270639B2

(12) United States Patent
Lopez et al.

(10) Patent No.: US 9,270,639 B2
(45) Date of Patent: Feb. 23, 2016

(54) **LOAD BALANCING AMONG A CLUSTER OF FIREWALL SECURITY DEVICES**

(71) Applicant: **Fortinet, Inc.**, Sunnyvale, CA (US)

(72) Inventors: **Edward Lopez**, Herndon, VA (US); **Joe Mihelich**, Folsom, CA (US); **Matthew F. Hepburn**, Vancouver (CA)

(73) Assignee: **Fortinet, Inc.**, Sunnyvale, CA (US)

(*) Notice: Subject to any disclaimer, the term of this patent is extended or adjusted under 35 U.S.C. 154(b) by 0 days.

(21) Appl. No.: **14/142,560**

(22) Filed: **Dec. 27, 2013**

(65) **Prior Publication Data**

US 2014/0143854 A1 May 22, 2014

Related U.S. Application Data

(63) Continuation-in-part of application No. 13/356,399, filed on Jan. 23, 2012, now Pat. No. 8,776,207.

(60) Provisional application No. 61/443,410, filed on Feb. 16, 2011, provisional application No. 61/542,120, filed on Sep. 30, 2011.

(51) **Int. Cl.**

H04L 29/06	(2006.01)
H04L 12/803	(2013.01)
H04L 12/741	(2013.01)
H04L 29/08	(2006.01)

(52) **U.S. Cl.**

CPC ***H04L 63/0218*** (2013.01); ***H04L 45/74*** (2013.01); ***H04L 47/125*** (2013.01); ***H04L 67/1002*** (2013.01); *H04L 63/0227* (2013.01)

(58) **Field of Classification Search**

CPC H04L 67/1002; H04L 63/0218; H04L 63/029; H04L 67/1004; H04L 67/1029; H04L 63/1458; H04L 67/1458; H04L 45/125; H04L 47/125; H04L 63/0227

See application file for complete search history.

(56) **References Cited**

U.S. PATENT DOCUMENTS

6,061,368	A *	5/2000	Hitzelberger	H04L 45/7453 370/537
6,553,029	B1 *	4/2003	Alexander	370/389
6,601,101	B1 *	7/2003	Lee	H04L 67/1008 709/202
6,880,089	B1 *	4/2005	Bommareddy et al.	726/11
7,401,355	B2	7/2008	Supnik et al.	

(Continued)

OTHER PUBLICATIONS

Blue Coat et al, "Technology Primer: VLAN Tagging," pp. 1-2, 2007.*

(Continued)

Primary Examiner — Jung Kim
Assistant Examiner — James J Wilcox
(74) *Attorney, Agent, or Firm* — Hamilton, DeSanctis & Cha LLP

(57) **ABSTRACT**

A method for balancing load among firewall security devices in a network is disclosed. Firewall security devices are arranged in multiple clusters. A switching device is configured with the firewall security devices by communicating control messages and heartbeat signals. Information regarding the configured firewall security devices is then included in a load balancing table. A load balancing function is configured for enabling the distribution of data traffic received by the switching device. A received data packet by the switching device is forwarded to one of the firewall security devices in a cluster based on the load balancing function, the load balancing table and the address contained in the data packet.

12 Claims, 21 Drawing Sheets

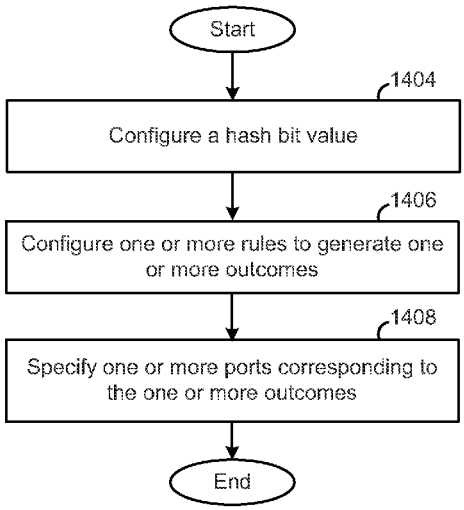

(56) **References Cited**

U.S. PATENT DOCUMENTS

7,440,467	B2	10/2008	Gallatin et al.	
7,657,940	B2	2/2010	Portolani et al.	
7,672,236	B1	3/2010	Karunakaran et al.	
7,792,047	B2	9/2010	Gallatin et al.	
7,796,613	B2	9/2010	Wackerly	
7,941,837	B1	5/2011	Jiang et al.	
7,958,199	B2 *	6/2011	Ferrari	H04L 29/06 370/396
8,176,553	B1	5/2012	Magdych et al.	
2004/0236720	A1 *	11/2004	Basso	G06F 17/30985
2005/0080890	A1 *	4/2005	Yang	H04L 67/1008 709/223
2005/0094633	A1 *	5/2005	Varanasi	H04L 41/08 370/389
2006/0037075	A1 *	2/2006	Frattura	H04L 12/2602 726/22
2007/0180226	A1 *	8/2007	Schory et al.	713/153
2007/0180513	A1 *	8/2007	Raz	H04L 29/12481 726/12
2007/0230415	A1 *	10/2007	Malik	H04L 41/0806 370/338
2008/0291826	A1	11/2008	Licardie et al.	
2009/0276842	A1 *	11/2009	Yevmenkin et al.	726/13
2010/0036903	A1	2/2010	Ahmad et al.	
2010/0180334	A1 *	7/2010	Chen	H04L 29/12584 726/13
2011/0026527	A1	2/2011	Shao et al.	
2012/0210416	A1	8/2012	Mihelich et al.	
2013/0174177	A1 *	7/2013	Newton	H04L 67/1008 718/105
2013/0311436	A1 *	11/2013	Calvignac	G06F 17/00 707/698
2014/0025800	A1 *	1/2014	Sharma	H04L 67/1095 709/223
2014/0321467	A1 *	10/2014	Wang	H04L 45/745 370/392

OTHER PUBLICATIONS

Non-Final Office Action for U.S. Appl. No. 13/356,399 mailed Apr. 18, 2014.

Kopparapu, "Load Balancing Servers, Firewalls, and Caches," Wiley Computer Publishing, John Wiley & Sons, Inc, 2002, ISBN0-471-41550-2, pp. 1-223.

Cisco Systems, Inc, "Catalyst 6500 Series Switch and Cisco 7600 Series Router Firewall Services Module Configuration Guide," 2004, pp. 1-382.

* cited by examiner

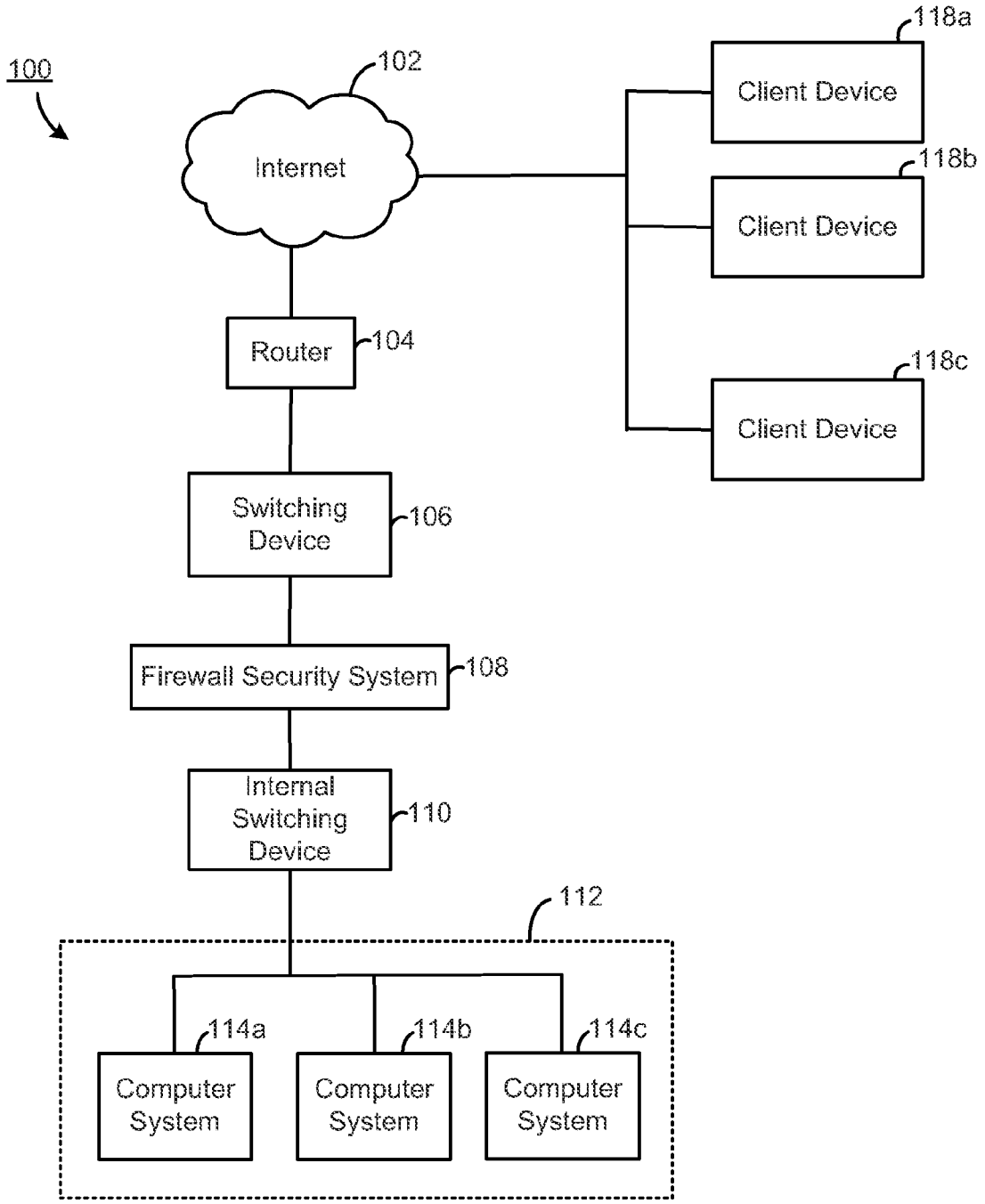
100
102
Internet
118a
Client Device
118b
Client Device
118c
Client Device
Router
104
Switching Device
106
Firewall Security System
108
Internal Switching Device
110
112
114a
114b
114c
Computer System
Computer System
Computer System

FIG. 1

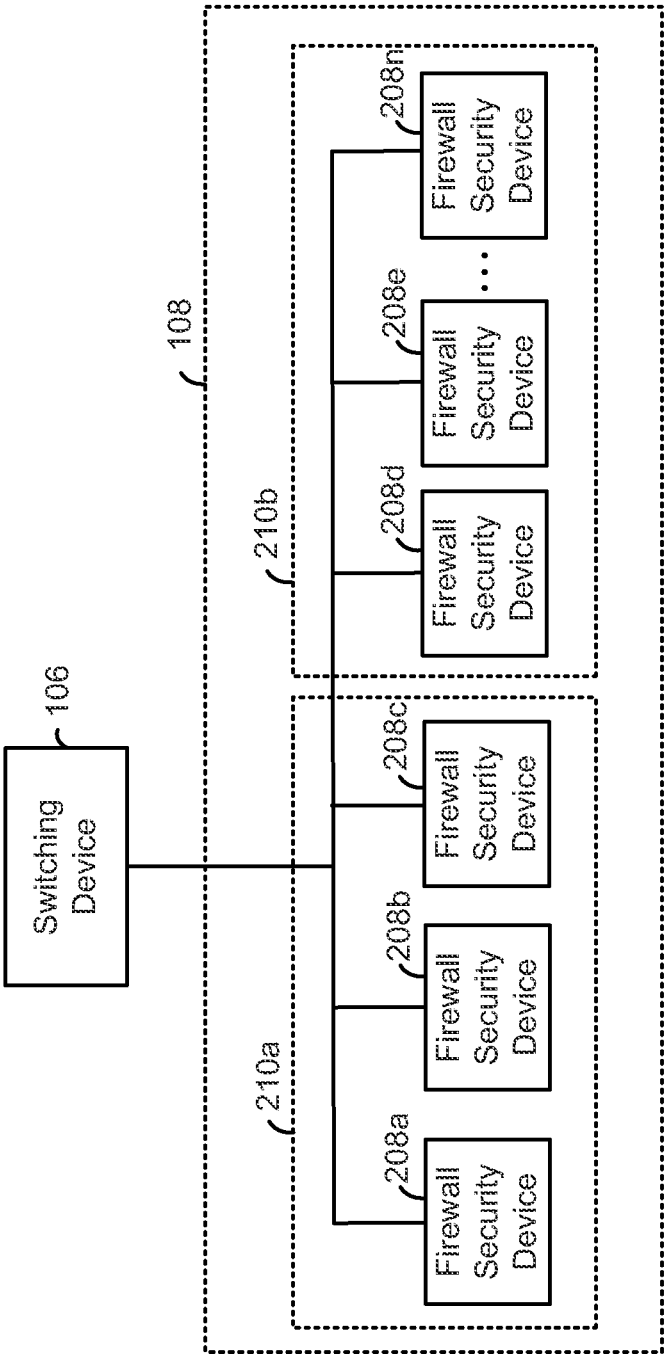
106
Switching Device
108
210a
210b
208a
Firewall Security Device
208b
Firewall Security Device
208c
Firewall Security Device
208d
Firewall Security Device
208e
Firewall Security Device
208n
Firewall Security Device

FIG. 2

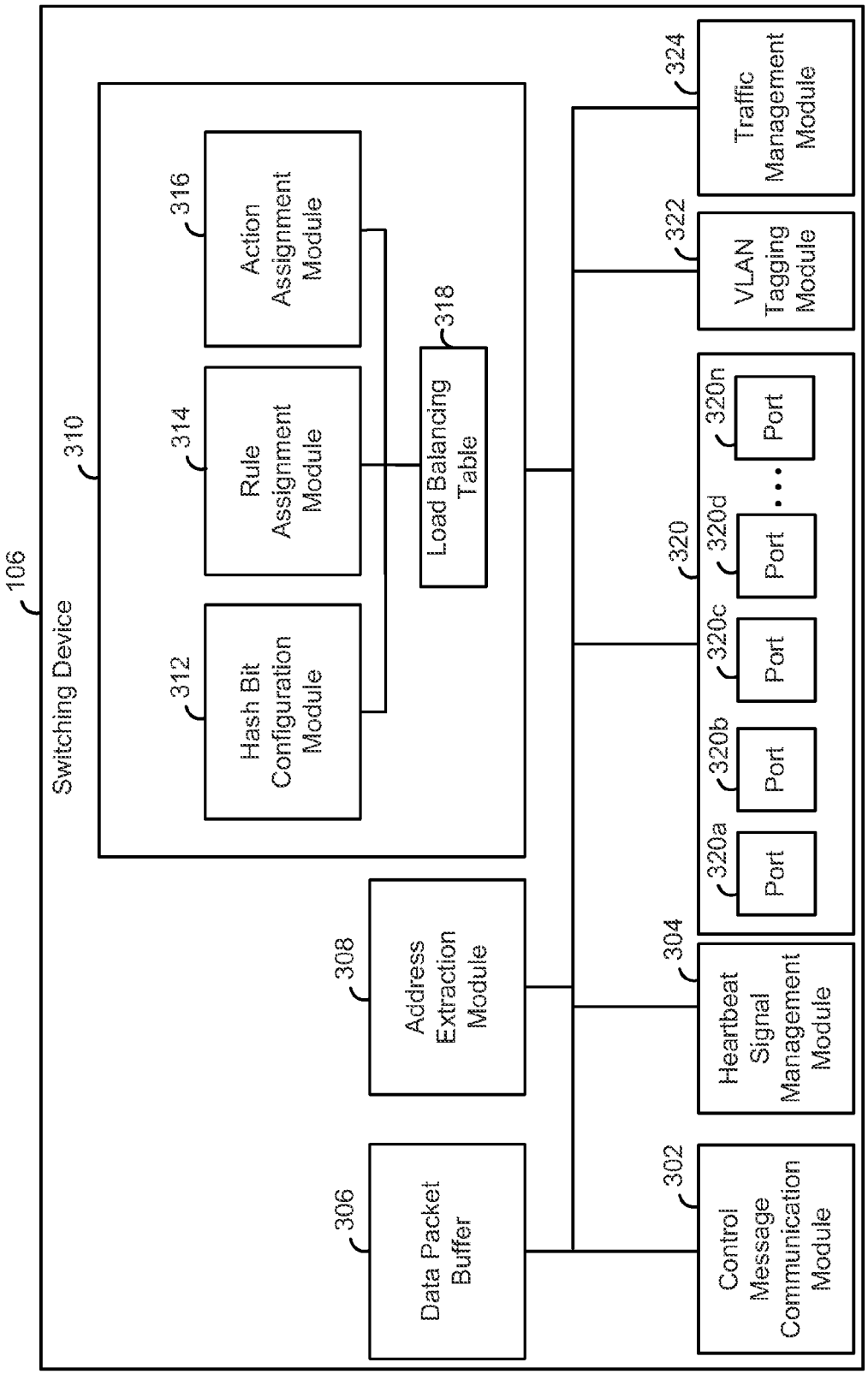
106
Switching Device
310
312
Hash Bit Configuration Module
314
Rule Assignment Module
316
Action Assignment Module
318
Load Balancing Table
306
Data Packet Buffer
308
Address Extraction Module
302
Control Message Communication Module
304
Heartbeat Signal Management Module
320
320a
Port
320b
Port
320c
Port
320d
Port
320n
Port
322
VLAN Tagging Module
324
Traffic Management Module

FIG. 3

400

402 Address	404 Outcome	406 Assigned Port
0000	0	Port 1
0001	1	Port 2
0010	2	Port 3
0011	3	Port 4
0100	4	Port 5
0101	5	Port 6
0110	6	Port 7
0111	7	Port 8
1000	8	Port 9
1001	9	Port 10
1010	10	Port 11
1011	11	Port 12
1100	12	Port 13
1101	13	Port 14
1110	14	Port 15
1111	15	Port 16

FIG. 4

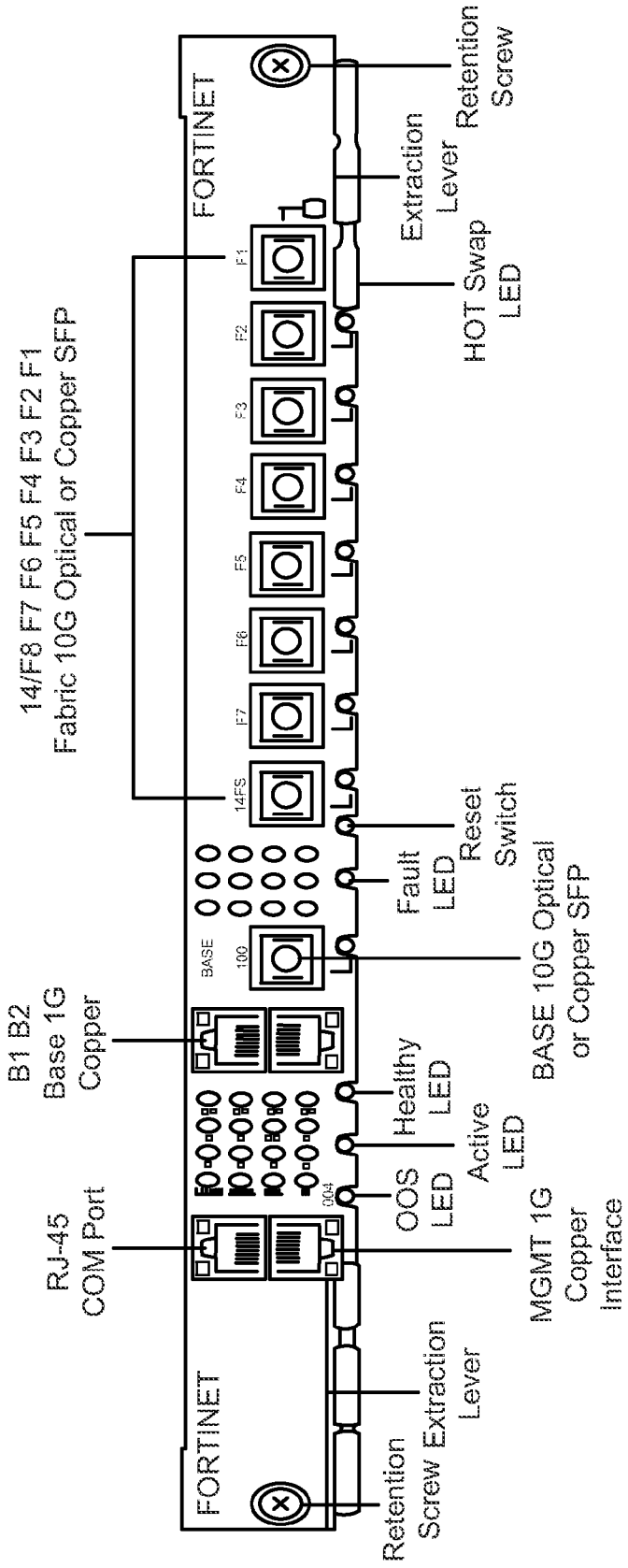
FORTINET
14/F8 F7 F6 F5 F4 F3 F2 F1
Fabric 10G Optical or Copper SFP
14FS
F7
F6
F5
F4
F3
F2
F1
Retention Screw
Extraction Lever
HOT Swap LED
Reset Switch
Fault LED
BASE
100
BASE 10G Optical or Copper SFP
B1 B2
Base 1G Copper
Healthy LED
Active LED
OOS LED
004
RJ-45 COM Port
MGMT 1G Copper Interface
FORTINET
Extraction Lever
Retention Screw

FIG. 5A

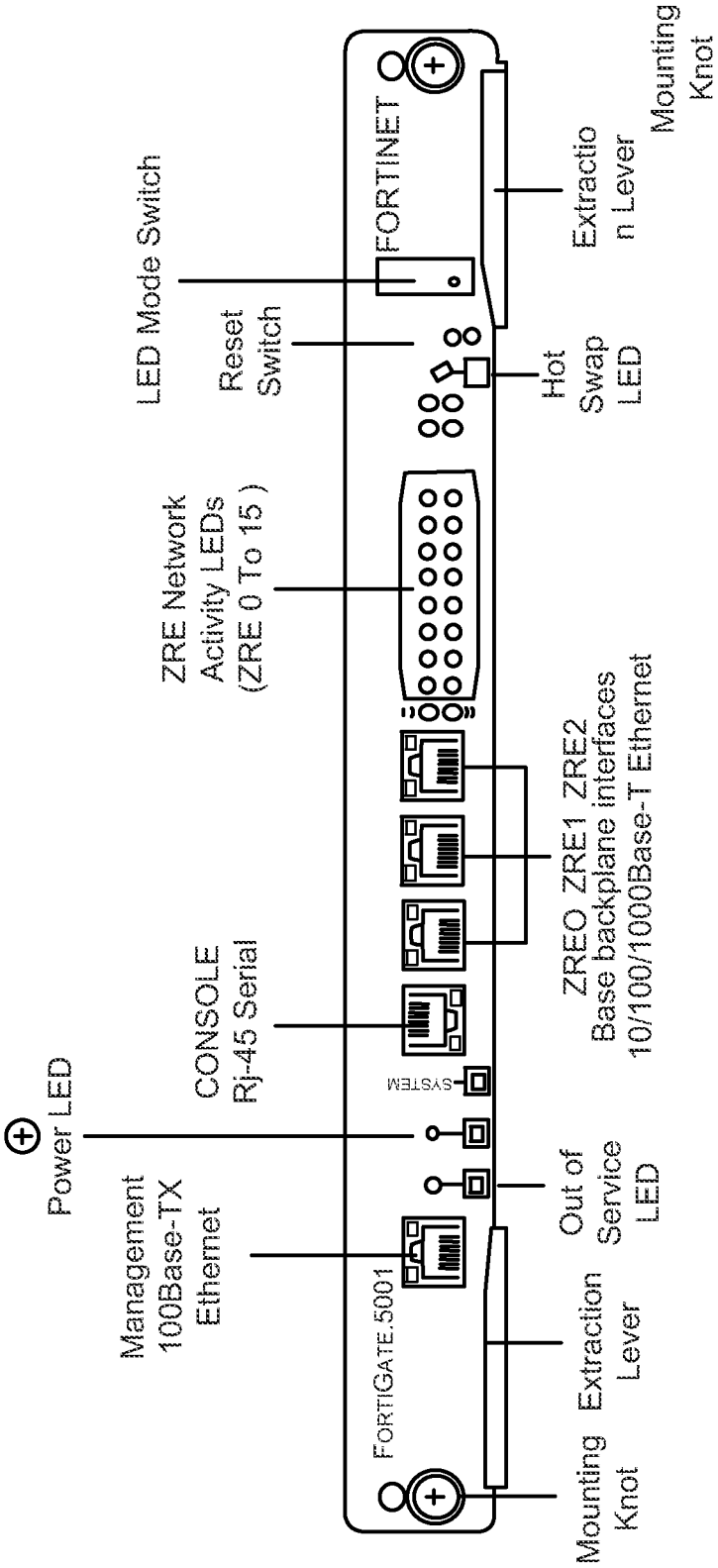
Power LED
Management 100Base-TX Ethernet
CONSOLE Rj-45 Serial
ZRE Network Activity LEDs (ZRE 0 To 15)
LED Mode Switch
Reset Switch
FORTIGATE.5001
SYSTEM
FORTINET
Out of Service LED
ZREO ZRE1 ZRE2 Base backplane interfaces 10/100/1000Base-T Ethernet
Hot Swap LED
Extraction Lever
Extractio n Lever
Mounting Knot
Mounting Knot

FIG. 5B

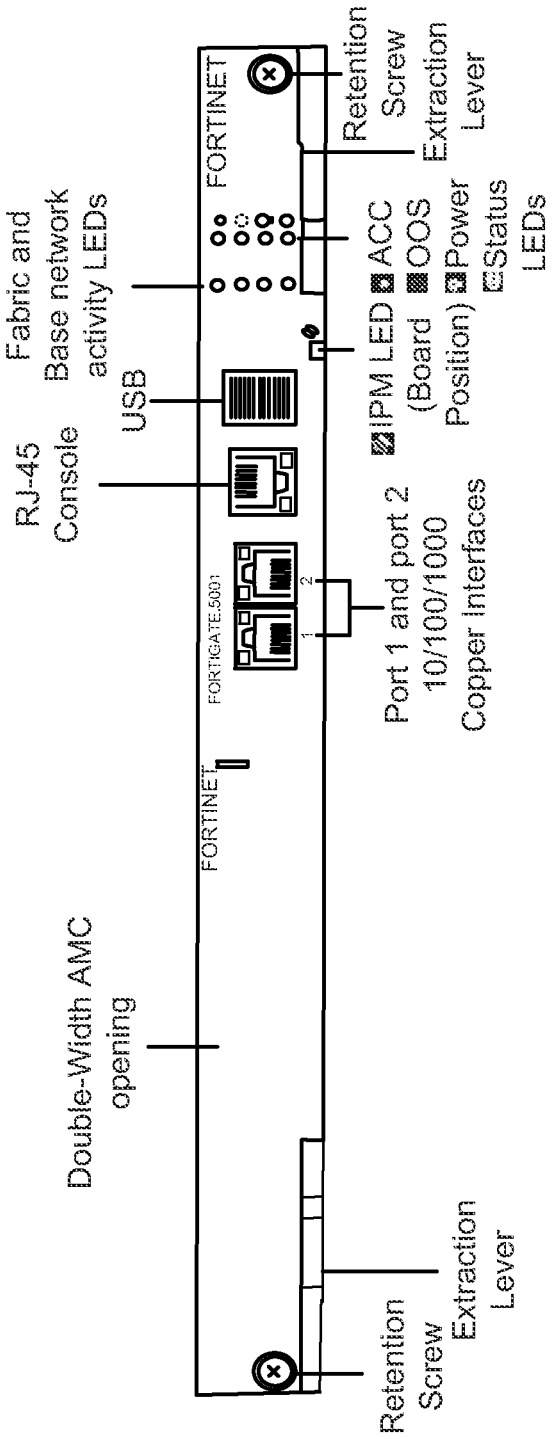
Retention Screw
Extraction Lever
FORTINET
Fabric and Base network activity LEDs
ACC
OOS
Power
Status LEDs
IPM LED (Board Position)
USB
RJ-45 Console
Port 1 and port 2 10/100/1000 Copper Interfaces
FORTIGATE-5001
FORTINET
Double-Width AMC opening
Retention Screw
Extraction Lever

FIG. 6A

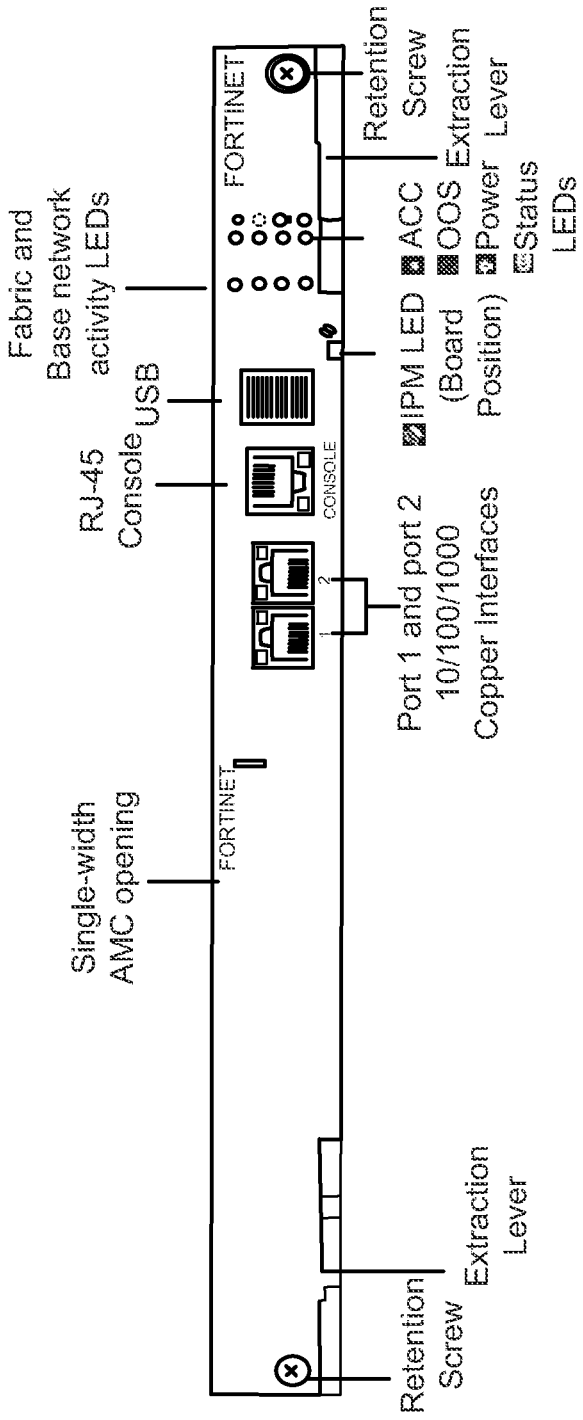
Fabric and
Base network
activity LEDs
USB
RJ-45
Console
Single-width
AMC opening
FORTINET
FORTINET
CONSOLE
Retention
Screw
Extraction
Lever
IPM LED
(Board
Position)
ACC
OOS
Power
Status
LEDs
Port 1 and port 2
10/100/1000
Copper Interfaces
Retention
Screw
Extraction
Lever

FIG. 6B

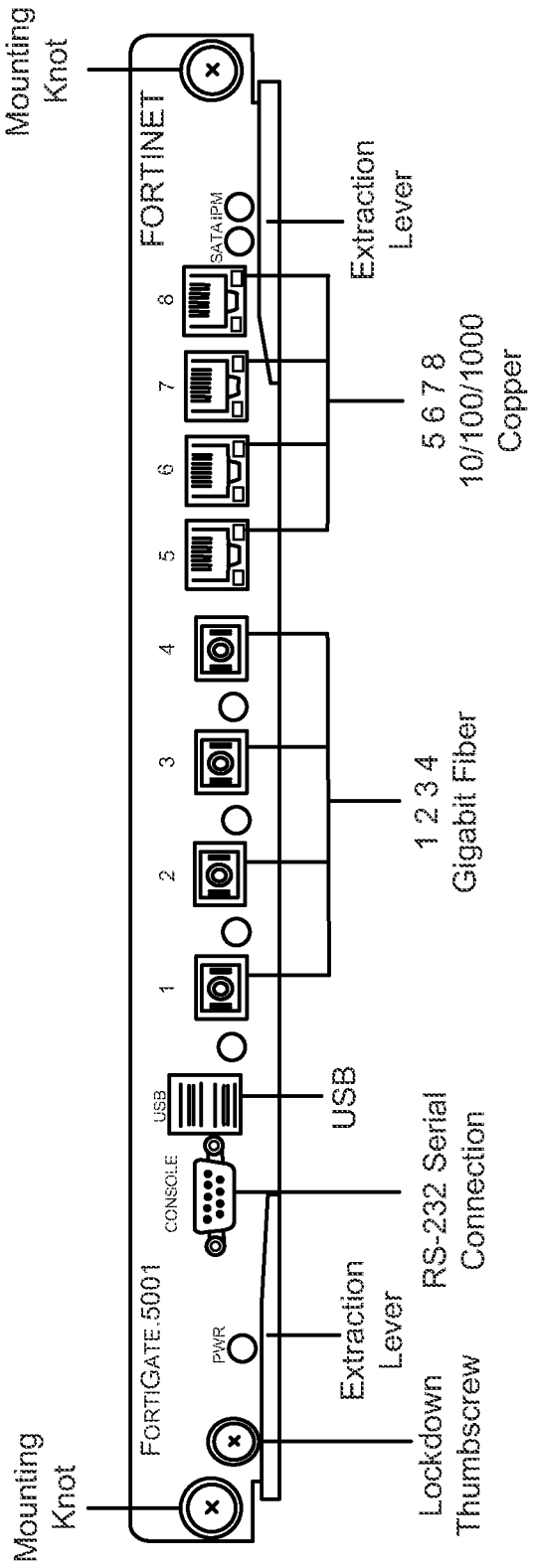
Mounting Knot
FORTINET
SATA/PM
Extraction Lever
8
7
6
5
5 6 7 8
10/100/1000
Copper
4
3
2
1
1 2 3 4
Gigabit Fiber
USB
USB
CONSOLE
RS-232 Serial Connection
FORTIGATE.5001
PWR
Extraction Lever
Lockdown Thumbscrew
Mounting Knot

FIG. 6C

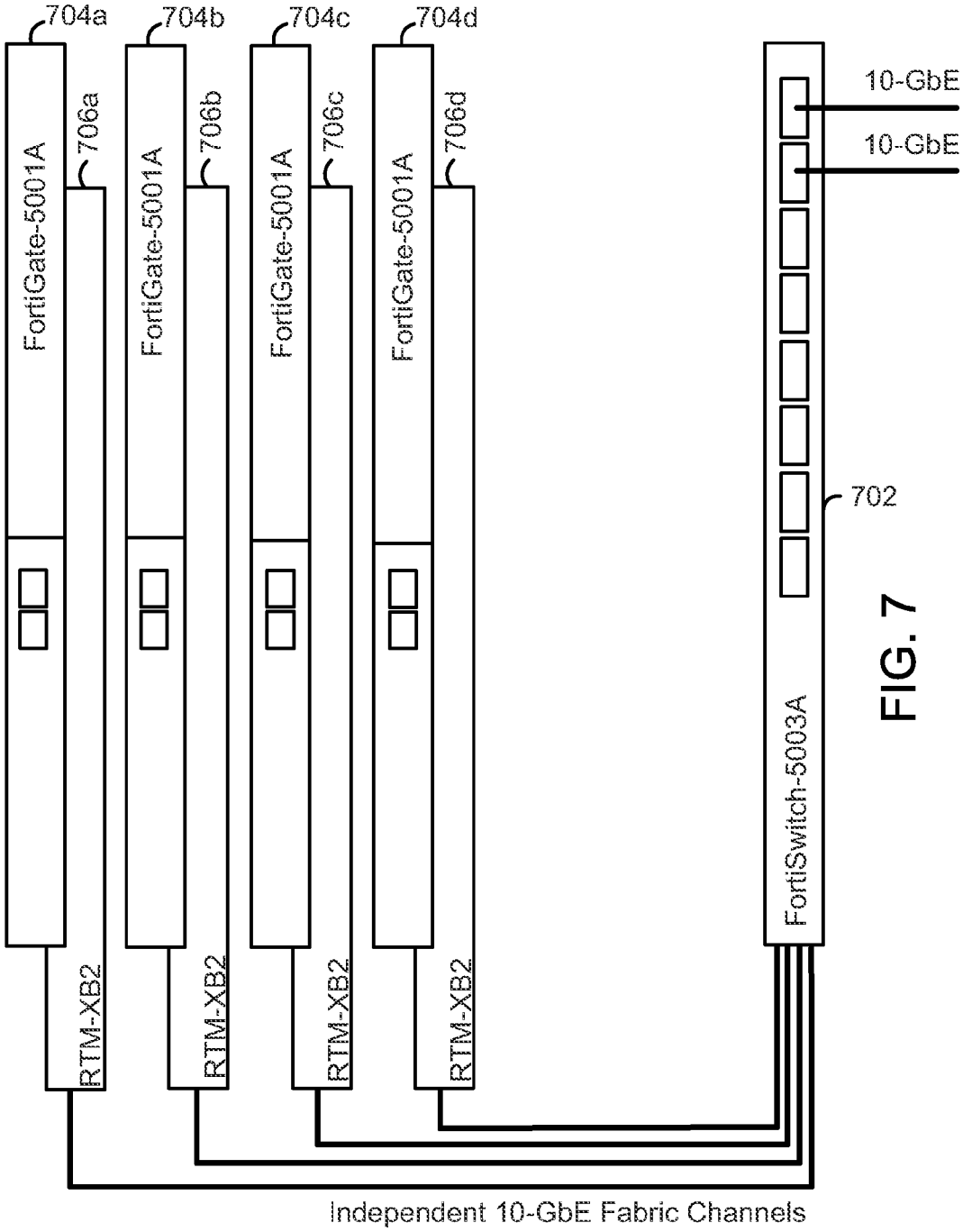
704a
704b
704c
704d
FortiGate-5001A
FortiGate-5001A
FortiGate-5001A
FortiGate-5001A
706a
706b
706c
706d
RTM-XB2
RTM-XB2
RTM-XB2
RTM-XB2
FortiSwitch-5003A
702
10-GbE
10-GbE
Independent 10-GbE Fabric Channels

FIG. 7

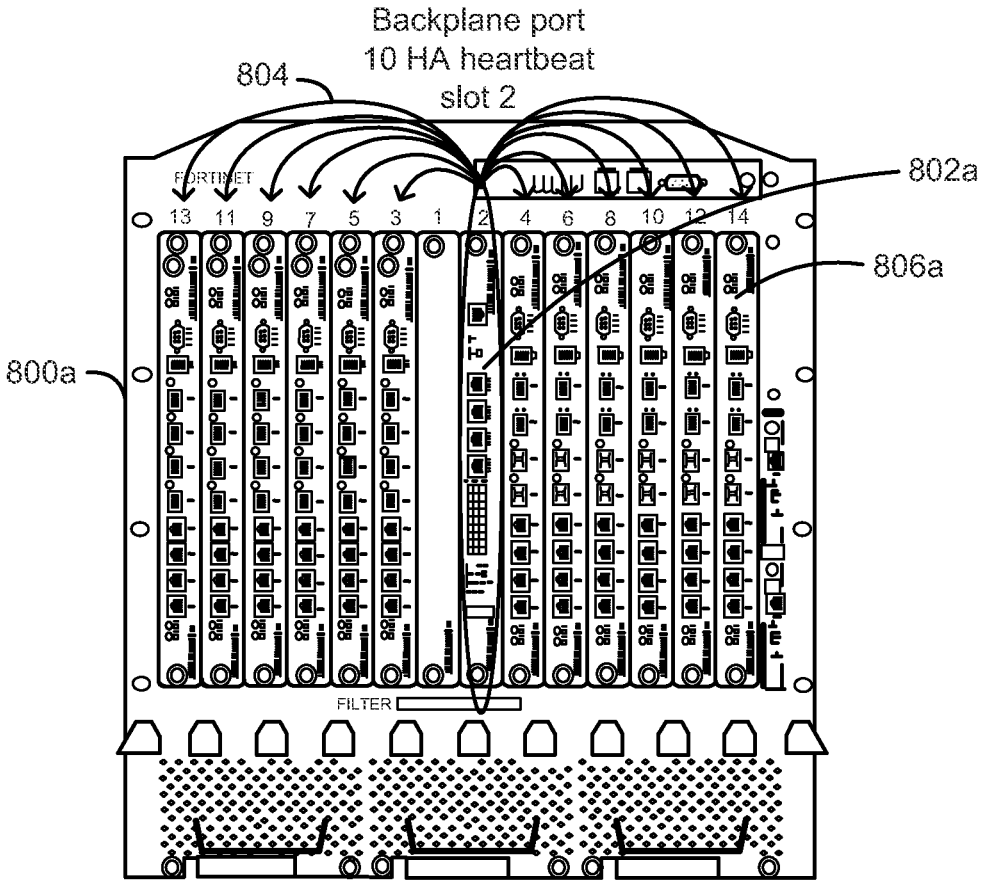
Backplane port
10 HA heartbeat
slot 2
804
802a
806a
800a
FORTINET
13 11 9 7 5 3 1 2 4 6 8 10 12 14
FILTER

FIG. 8A

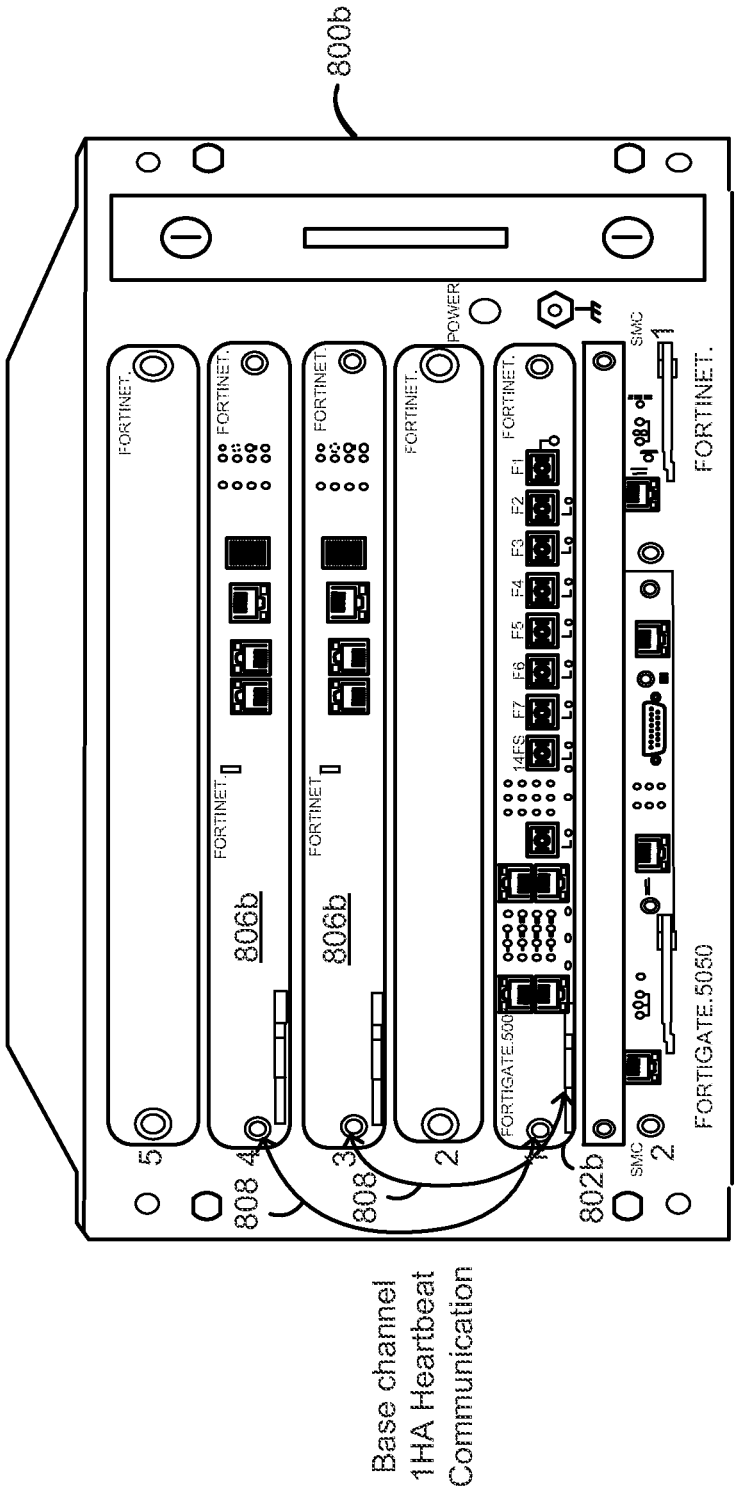
800b
FORTINET.
FORTINET.
FORTINET.
FORTINET.
FORTINET.
POWER
SMC
1
FORTINET.
F1
F2
F3
F4
F5
F6
F7
14FS
FORTINET.
FORTINET.
806b
806b
FORTIGATE.500
FORTIGATE.5050
SMC
2
5
4
3
2
1
808
808
802b
Base channel
1HA Heartbeat
Communication

FIG. 8B

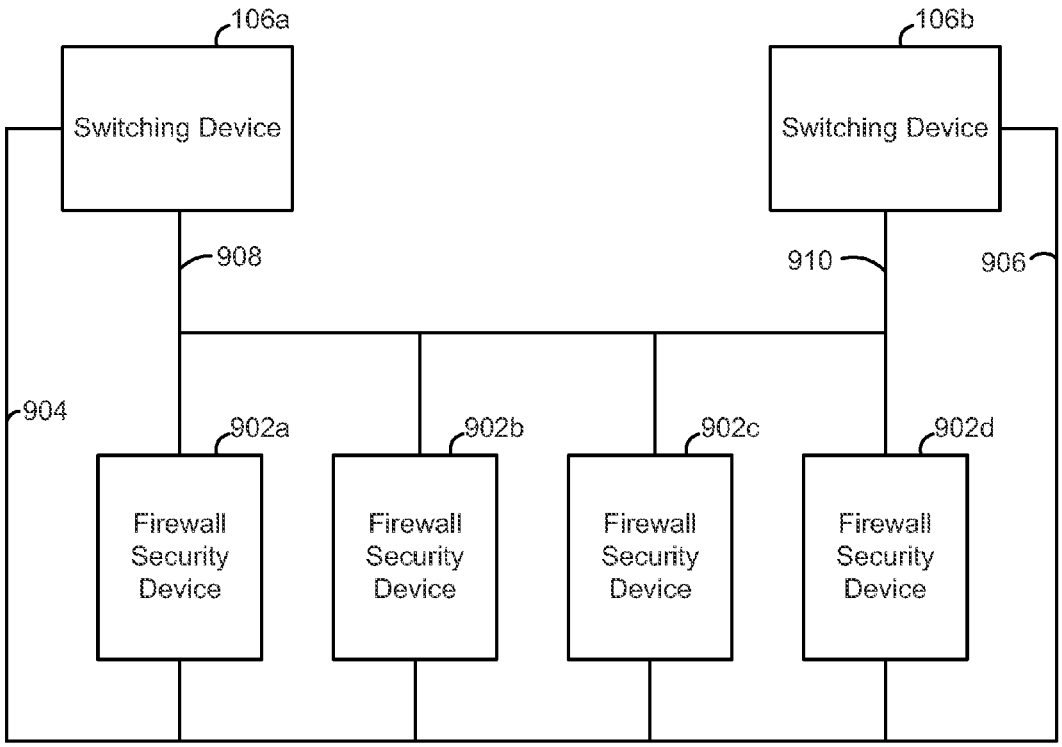
106a
Switching Device
106b
Switching Device
908
910
906
904
902a
Firewall Security Device
902b
Firewall Security Device
902c
Firewall Security Device
902d
Firewall Security Device

FIG. 9

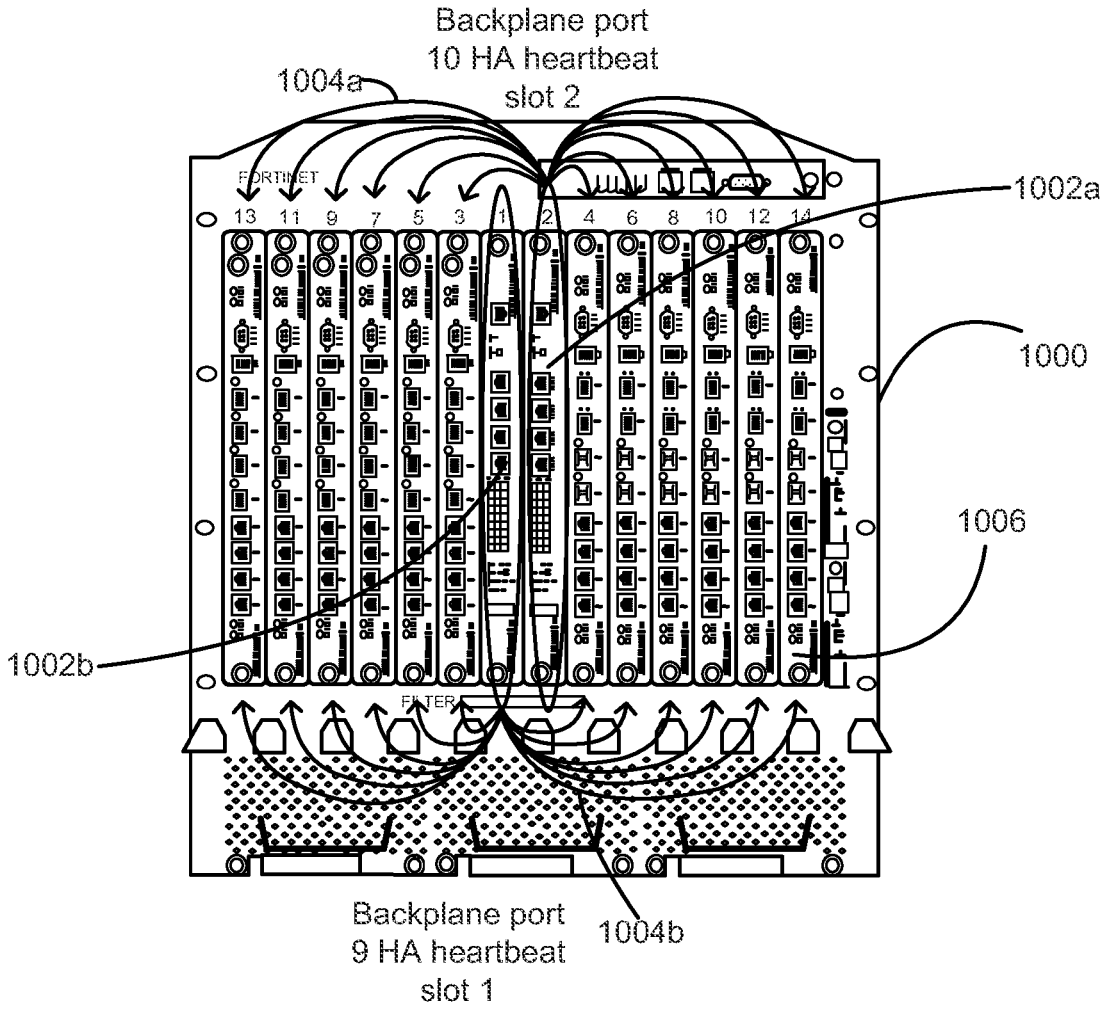
Backplane port
10 HA heartbeat
slot 2
1004a
1002a
1000
1006
1002b
FORTINET
13 11 9 7 5 3 1 2 4 6 8 10 12 14
FILTER
Backplane port
9 HA heartbeat
slot 1
1004b

FIG. 10

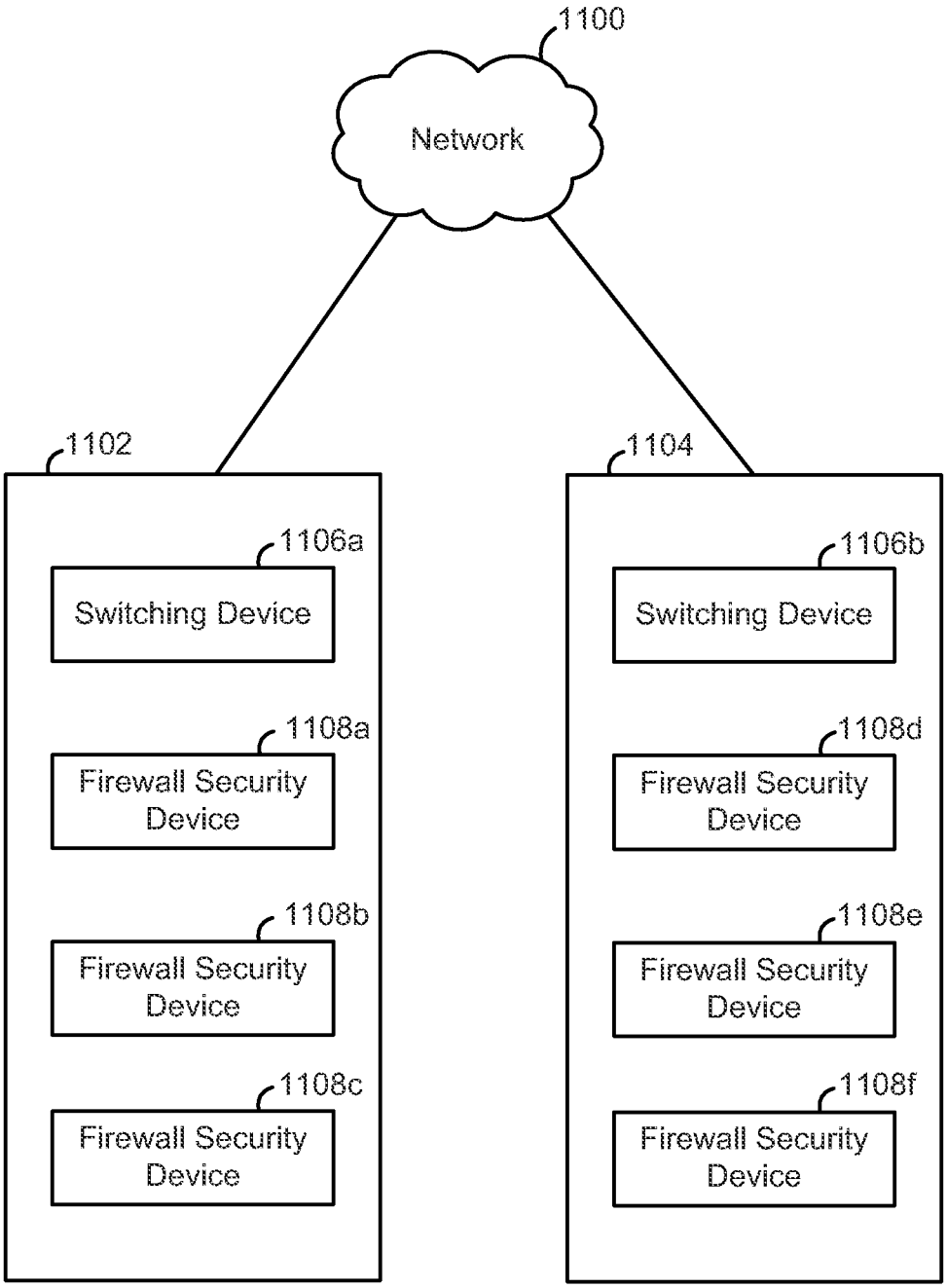
1100
Network
1102
1104
1106a
Switching Device
1108a
Firewall Security Device
1108b
Firewall Security Device
1108c
Firewall Security Device
1106b
Switching Device
1108d
Firewall Security Device
1108e
Firewall Security Device
1108f
Firewall Security Device

FIG. 11

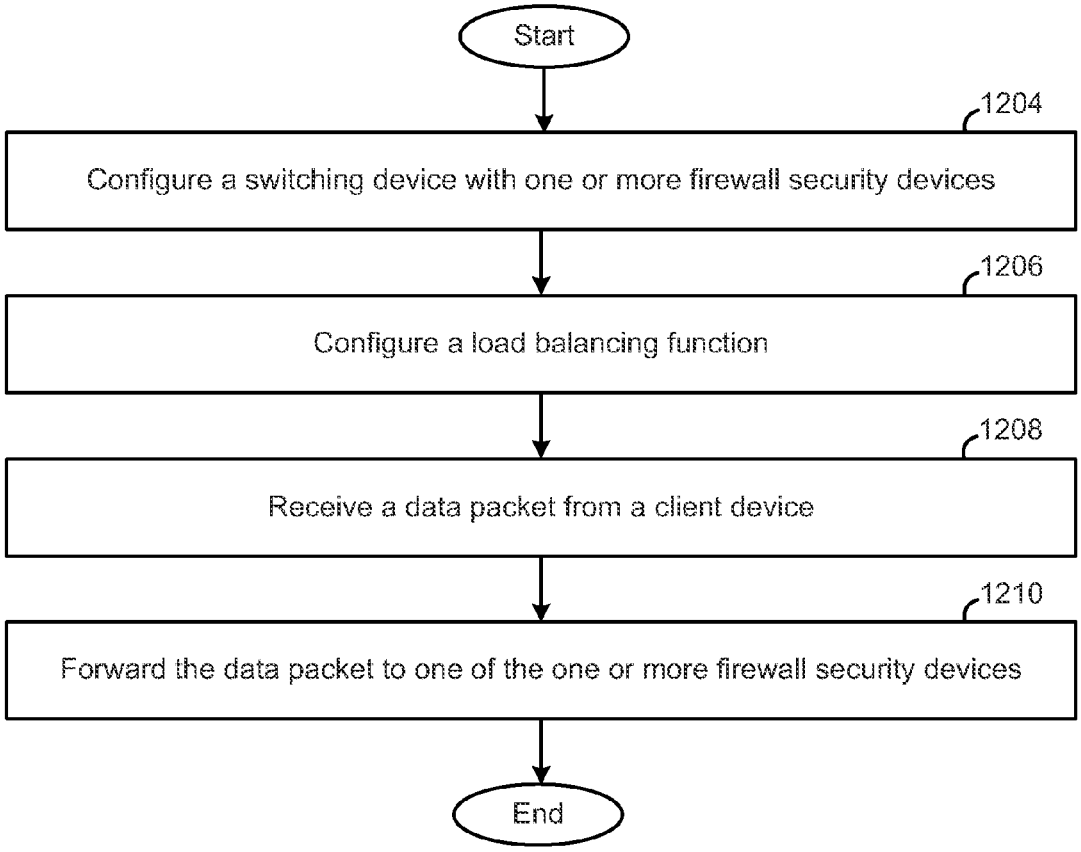
Start
1204
Configure a switching device with one or more firewall security devices
1206
Configure a load balancing function
1208
Receive a data packet from a client device
1210
Forward the data packet to one of the one or more firewall security devices
End

FIG. 12

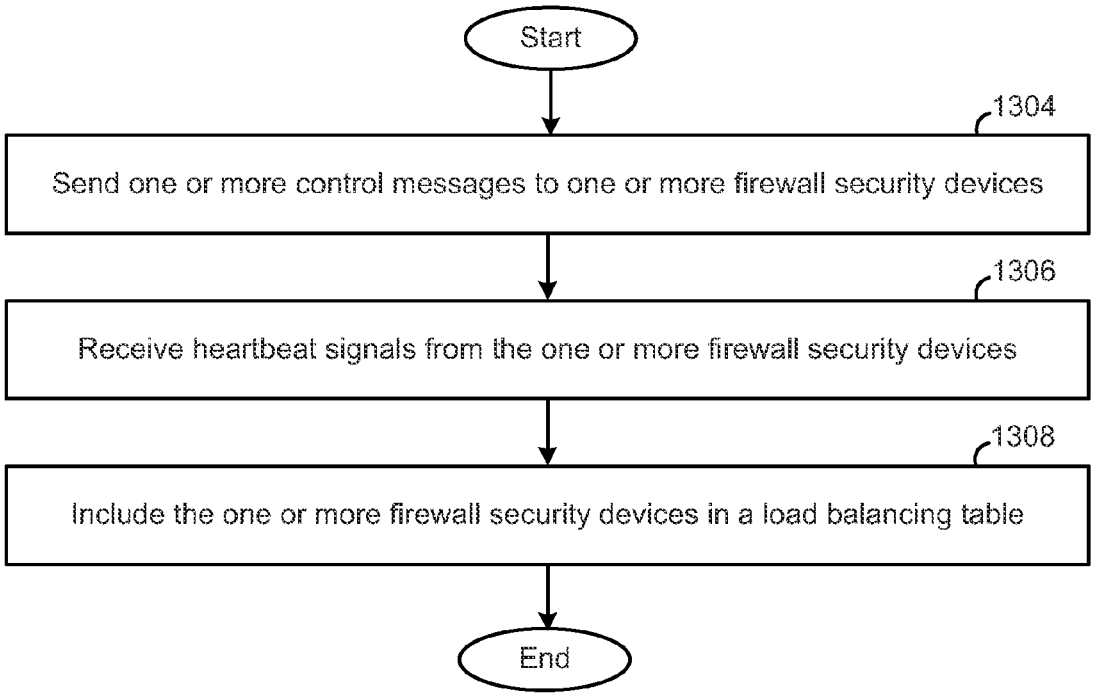
Start
1304
Send one or more control messages to one or more firewall security devices
1306
Receive heartbeat signals from the one or more firewall security devices
1308
Include the one or more firewall security devices in a load balancing table
End

FIG. 13

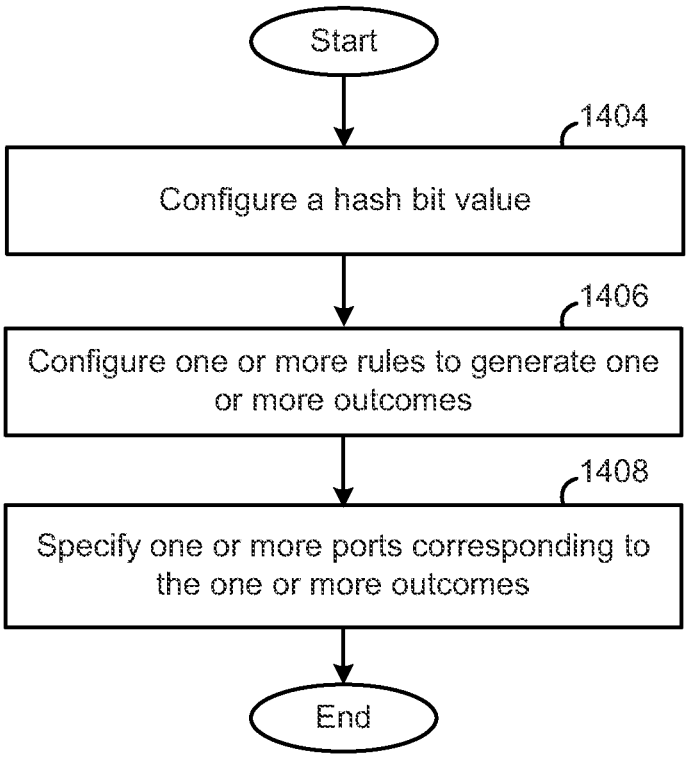
Start
1404
Configure a hash bit value
1406
Configure one or more rules to generate one or more outcomes
1408
Specify one or more ports corresponding to the one or more outcomes
End

FIG. 14

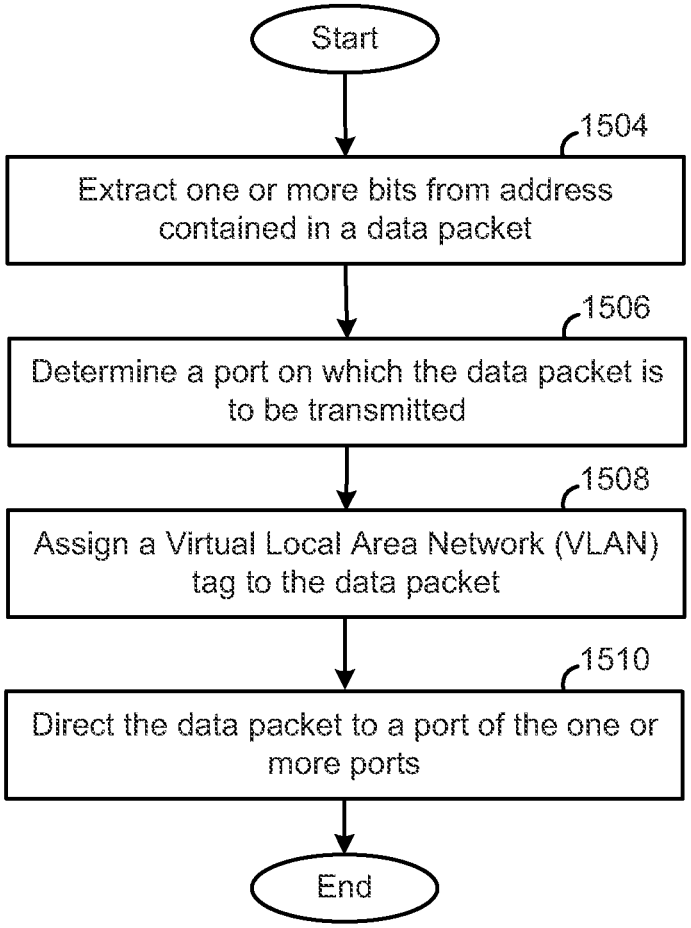
Start
1504
Extract one or more bits from address contained in a data packet
1506
Determine a port on which the data packet is to be transmitted
1508
Assign a Virtual Local Area Network (VLAN) tag to the data packet
1510
Direct the data packet to a port of the one or more ports
End

FIG. 15

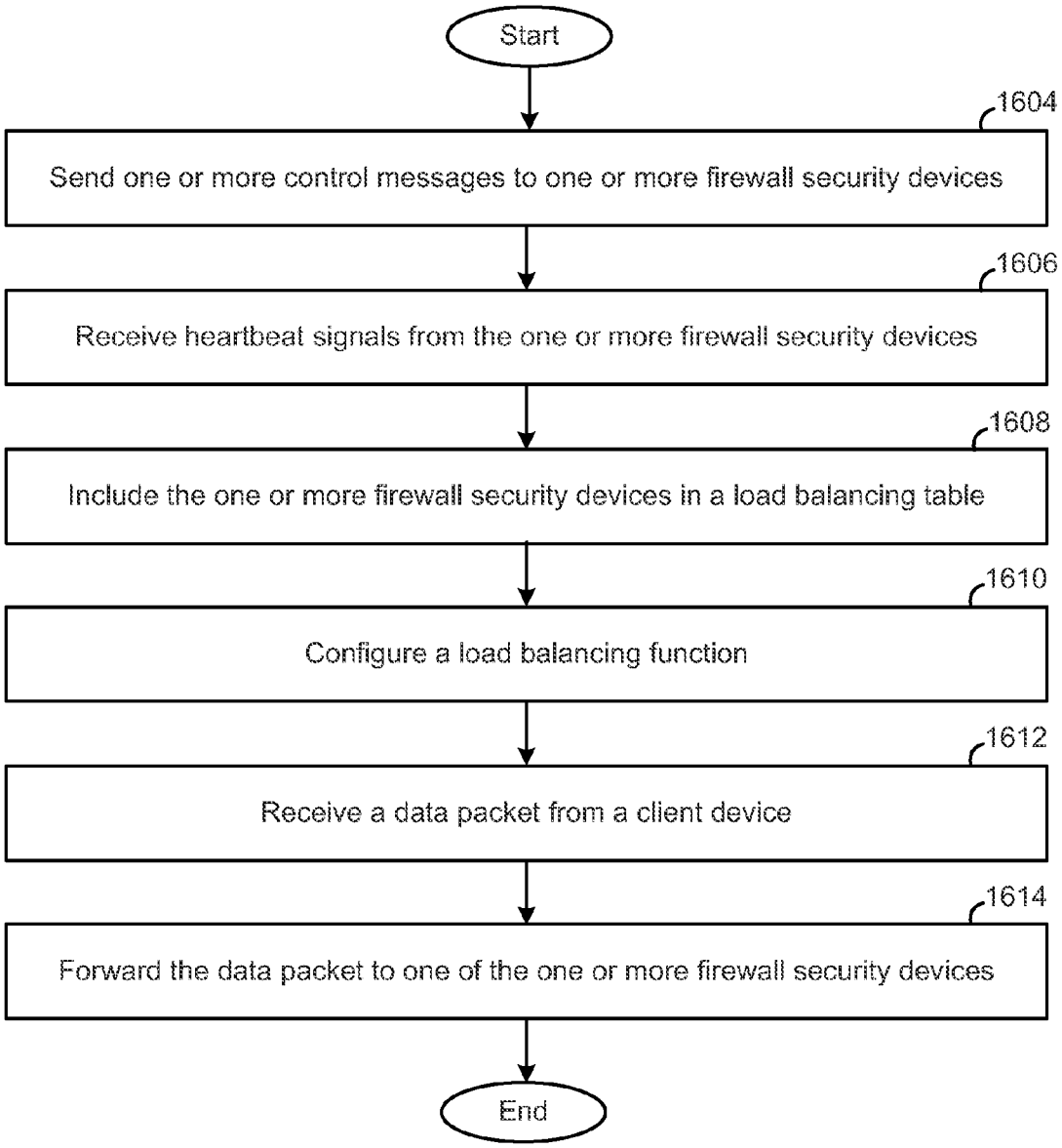
Start
1604
Send one or more control messages to one or more firewall security devices
1606
Receive heartbeat signals from the one or more firewall security devices
1608
Include the one or more firewall security devices in a load balancing table
1610
Configure a load balancing function
1612
Receive a data packet from a client device
1614
Forward the data packet to one of the one or more firewall security devices
End

FIG. 16

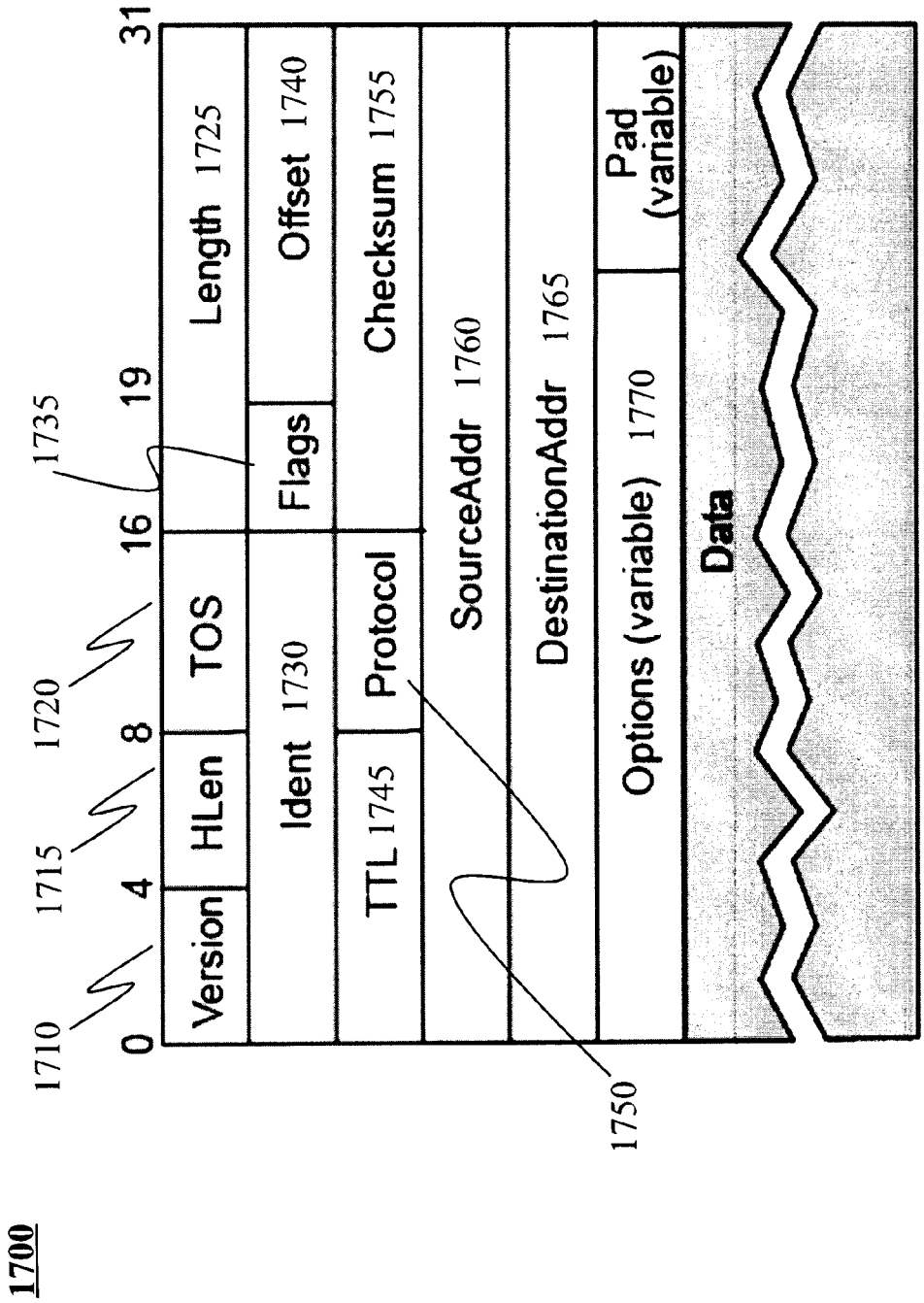
1700
1710
1715
1720
1735
0
4
8
16
19
31
Version
HLen
TOS
Length 1725
Ident 1730
Flags
Offset 1740
TTL 1745
Protocol
Checksum 1755
SourceAddr 1760
DestinationAddr 1765
Options (variable) 1770
Pad (variable)
Data
1750

FIG. 17

LOAD BALANCING AMONG A CLUSTER OF FIREWALL SECURITY DEVICES

CROSS-REFERENCE TO RELATED APPLICATIONS

This application is a continuation-in-part of U.S. patent application Ser. No. 13/356,399, filed on Jan. 23, 2012, now U.S. Pat. No. 8,776,207, which claims the benefit of U.S. Provisional Application No. 61/443,410, filed on Feb. 16, 2011 and U.S. Provisional Application No. 61/542,120, filed on Sep. 30, 2011, all of which are hereby incorporated by reference in their entirety for all purposes.

COPYRIGHT NOTICE

Contained herein is material that is subject to copyright protection. The copyright owner has no objection to the facsimile reproduction of the patent disclosure by any person as it appears in the Patent and Trademark Office patent files or records, but otherwise reserves all rights to the copyright whatsoever. Copyright ©2011-2013, Fortinet, Inc.

BACKGROUND

1. Field

Embodiments of the present invention generally relate to the field of load balancing in a computer network. In particular, various embodiments relate to a method and system for balancing load among a plurality of firewall security devices arranged in one or more clusters.

2. Description of the Related Art

The Internet is a medium that provides access to various information, applications, services, and provides ability to publish information, in revolutionary ways. Today, the Internet has significantly changed the way we access and use information. Millions of computers, from low processing end personal computers to high processing-end super computers are coupled to the Internet. Internet Banking, E-commerce, and E-learning are some of the high-end services that we access in our day-to-day life. In order to access such services, a user shares his personal information, such as, name, contact details, highly confidential information such as usernames, passwords, bank account number, credit card details, and the like with the service providers. Similarly, confidential information of companies such as, trade secrets, financial details, employee details, company strategies, and the like is also stored on servers that are connected to the Internet. There is a threat to such confidential data by malware, viruses, spyware, key loggers, and unauthorized access to information and so forth. This poses great danger to unwary computer users.

In order to avoid such threats, there are various solutions, such as firewalls and antivirus software that is available in the market. A firewall provides a barrier against most of these types of threats. The firewall installed at a private network prevents any unauthorized access to and from the private network. Firewalls can be implemented in both hardware and software, or a combination of both. Generally, the firewalls are employed to restrict unauthorized Internet users from accessing the private networks connected to the Internet, such as intranets. All messages that enter or leave the private network have to pass through the firewall; the firewall examines each message and blocks those that do not meet the specified security criteria.

However, the firewall can be a single point of failure. If it fails, there will be no restrictions on the viruses, spyware, key loggers, and unauthorized access and the services may get

hampered badly. In order to overcome such problems, various solutions are available that provide high availability (HA) clusters of firewalls. As there are multiple firewall systems in a cluster, how the data traffic load is balanced among the multiple firewall systems becomes extremely important. There are various network switches that are available in the market, which can balance load among the multiple firewall systems. However, there is a limitation with respect to the number of firewall systems that a single network switch can handle in a cluster. Further, due to highly varying and growing traffic requirements of today's networks, which are increasingly shifting towards core, cloud, and datacenter based solutions, the processing capability of the presently used firewall systems and the load balancing arrangement is not sufficient.

Additionally, in the presently available HA cluster based load balancing systems, it is very difficult to manage asymmetric traffic flows and achieve extreme levels of session based performance. Furthermore, due to limited processing capabilities of the present load balancing systems it is very difficult to balance load among geographically distributed firewall systems.

In light of the foregoing discussion, there is a need for a method, system, and apparatus that can overcome the limitations of presently available HA cluster based load balancing systems. The method, system, and apparatus should provide effective load balancing for the increased data traffic requirements and should be capable of handling asymmetric traffic flows. Further, the method, system and apparatus for load balancing should be capable of adaptively distributing the data traffic among the significantly large number of firewall systems. Still further, the method, system, and apparatus should provide load balancing among geographically distributed firewall systems.

SUMMARY

Methods and systems are described for balancing load among firewall security devices in a network. According to an embodiment of the present invention, firewall security devices are arranged in one or more load balancing clusters. The switching device is configured with the one or more firewall security devices for distributing traffic among them. In order to configure the switching device with the firewall security devices, one or more control messages are sent by the switching device to the firewall security devices. In response to the received control messages, the firewall security devices send heartbeat signals to the switching device. After the successful reception of the heartbeat signals, the firewall security devices are included in a load balancing table maintained by the switching device. When a data packet is received by the switching device, it is forwarded to a firewall security device based on a load balancing function.

According to an embodiment of the present invention, after configuration, the switching device may keep a firewall security device in a standby mode, which can be brought into use when any firewall device in a cluster fails. Further, a load balancing function is configured in order to enable the load balancing of the received data traffic by the switching device. According to an embodiment of the present invention, the load balancing function enables the switching device to manage more than eight firewall security devices in a cluster.

According to an embodiment of the present invention, the load balancing function includes a hash function. Configuration of the load balancing function includes setting a hash bit value. Further, one or more rules are configured for generat-

ing one or more outcomes. Furthermore, one or more ports are specified corresponding to the one or more outcomes for distributing the data traffic.

According to an embodiment of the present invention, the load balancing function operates on the address information contained in the data packet. Based on the hash of one or more bits in the address field, the switching device decides, on which port to redirect the data packet. Hence, a firewall security device that is configured on the port to which the data packet is redirected, attends the data traffic.

Methods and systems, according to various embodiments of the present invention, provide high availability (HA) clusters of firewall security devices having enhanced reliability and increased performance, the two key requirements of critical enterprise networking. Load balancing in HA is implemented by configuring a plurality of firewall security devices in an HA cluster. In the network, HA clusters process network traffic and provide normal security services such as firewalling, virtual private network (VPN), virus scanning, web filtering, and spam filtering services.

According to an embodiment of the present invention, if a firewall security device in a cluster fails, another firewall security device in the cluster automatically takes over the work that the failed firewall security was performing. Thus, the cluster continues to process network traffic and provide normal security services with virtually no interruption. Further, according to various embodiments of the present invention, methods and systems for load balancing among the plurality of firewall security devices is capable of achieving extreme levels of session-based performance. Furthermore, the various embodiments of the present invention offer the advantage of geographically distributed load-balancing, since the invention can be used to overcome a number of firewall deployment limitations, including handling asynchronous traffic.

Other features of embodiments of the present invention will be apparent from the accompanying drawings and from the detailed description that follows.

BRIEF DESCRIPTION OF THE DRAWINGS

Embodiments of the present invention are illustrated by way of example, and not by way of limitation, in the figures of the accompanying drawings and in which like reference numerals refer to similar elements and in which:

FIG. **1** is a block diagram conceptually illustrating a simplified network architecture in which embodiments of the present invention may be employed.

FIG. **2** is a block diagram conceptually illustrating a switching device connected to firewall security devices arranged in clusters in accordance with an embodiment of the present invention.

FIG. **3** is a block diagram conceptually illustrating interaction among various functional units of a switching device in accordance with an embodiment of the present invention.

FIG. **4** conceptually illustrates a load balancing table maintained by a switching device in accordance with an exemplary embodiment of the present invention.

FIGS. **5**A and **5**B conceptually illustrate a front panel of a switching device in accordance with exemplary embodiments of the present invention.

FIG. **6**A, **6**B, and **6**C conceptually illustrate a front panel of a firewall security device in accordance with exemplary embodiments of the present invention.

FIG. **7** conceptually illustrates connection of firewall security devices with a switching device through rear transition modules (RTM) in accordance with an exemplary embodiment of the present invention.

FIGS. **8**A and **8**B conceptually illustrate connection of firewall security devices installed on a chassis with a switching device in accordance with exemplary embodiments of the present invention.

FIG. **9** conceptually illustrates connection of firewall security devices with two switching devices in accordance with an embodiment of the present invention.

FIG. **10** conceptually illustrates connection of firewall security devices with two switching devices in accordance with an exemplary embodiment of the present invention.

FIG. **11** is a block diagram conceptually illustrating a simplified network architecture for handling asymmetric network data traffic in accordance with an embodiment of the present invention.

FIG. **12** is a flow diagram illustrating a method for balancing load among one or more firewall security devices in accordance with an embodiment of the present invention.

FIG. **13** is a flow diagram illustrating a method for configuring a switching device in accordance with an embodiment of the present invention.

FIG. **14** is a flow diagram illustrating a method for configuring a load balancing function in accordance with an embodiment of the present invention.

FIG. **15** is a flow diagram illustrating a method for forwarding a data packet to a firewall security device in accordance with an embodiment of the present invention.

FIG. **16** is a flow diagram illustrating a method for balancing load among one or more firewall security devices in accordance with an embodiment of the present invention.

FIG. **17** illustrates a format of an Internet Protocol (IP) version 4 (IPv4) data packet.

DETAILED DESCRIPTION

Methods and systems are described for balancing load among firewall security devices in a network. According to an embodiment of the present invention, firewall security devices and/or virtual systems within firewall security devices are arranged in one or more load balancing clusters. A switching device is configured to distribute traffic among the cluster members. One or more control messages are sent by the switching device to the cluster members (e.g., the firewall security devices and/or virtual systems within the firewall security devices). In response to the received control messages, the cluster members send heartbeat signals to the switching device. After the successful reception of the heartbeat signals, the cluster members are included in a load balancing table maintained by the switching device. When a data packet is subsequently received by the switching device, it is forwarded to a cluster member based on a load balancing function.

In the following description, numerous specific details are set forth in order to provide a thorough understanding of embodiments of the present invention. It will be apparent, however, to one skilled in the art that embodiments of the present invention may be practiced without some of these specific details. In other instances, well-known structures and devices are shown in block diagram form.

Embodiments of the present invention include various steps, which will be described below. The steps may be performed by hardware components or may be embodied in machine-executable instructions, which may be used to cause a general-purpose or special-purpose processor programmed

with the instructions to perform the steps. Alternatively, the steps may be performed by a combination of hardware, software, firmware and/or by human operators.

Embodiments of the present invention may be provided as a computer program product, which may include a machine-readable storage medium tangibly embodying thereon instructions, which may be used to program a computer (or other electronic devices) to perform a process. The machine-readable medium may include, but is not limited to, fixed (hard) drives, magnetic tape, floppy diskettes, optical disks, compact disc read-only memories (CD-ROMs), and magneto-optical disks, semiconductor memories, such as ROMs, PROMs, random access memories (RAMs), programmable read-only memories (PROMs), erasable PROMs (EPROMs), electrically erasable PROMs (EEPROMs), flash memory, magnetic or optical cards, or other type of media/machine-readable medium suitable for storing electronic instructions (e.g., computer programming code, such as software or firmware). Moreover, embodiments of the present invention may also be downloaded as one or more computer program products, wherein the program may be transferred from a remote computer to a requesting computer by way of data signals embodied in a carrier wave or other propagation medium via a communication link (e.g., a modem or network connection).

In various embodiments, the article(s) of manufacture (e.g., the computer program products) containing the computer programming code may be used by executing the code directly from the machine-readable storage medium or by copying the code from the machine-readable storage medium into another machine-readable storage medium (e.g., a hard disk, RAM, etc.) or by transmitting the code on a network for remote execution. Various methods described herein may be practiced by combining one or more machine-readable storage media containing the code according to the present invention with appropriate standard computer hardware to execute the code contained therein. An apparatus for practicing various embodiments of the present invention may involve one or more computers (or one or more processors within a single computer) and storage systems containing or having network access to computer program(s) coded in accordance with various methods described herein, and the method steps of the invention could be accomplished by modules, routines, subroutines, or subparts of a computer program product.

While for sake of illustration embodiments of the present invention are described with reference to switching devices and firewall security devices available from the assignee of the present invention, it is to be understood that the methods and systems of the present invention are equally applicable to switching devices and firewall security devices that are manufactured by others, including, but not limited to, Barracuda Networks, Brocade Communications Systems, Inc., Check-Point Software Technologies Ltd., Cisco Systems, Inc., Citrix Systems, Inc., Imperva Inc., Juniper Networks, Inc., Nokia, Palo Alto Networks, SonicWall, Inc. and Syntensia AB.

Similarly, for sake of illustration, various embodiments of the present invention are described with reference to, physical firewall security devices being members of load balancing clusters, it is to be understood that the methods and systems of the present invention are equally applicable to environments in which the firewall security devices are implemented as virtual systems in which case a physical device could have virtual systems belonging to multiple clusters.

Terminology

Brief definitions of terms used throughout this application are given below.

The term "client" generally refers to an application, program, process or device in a client/server relationship that requests information or services from another program, process or device (a server) on a network. Importantly, the terms "client" and "server" are relative since an application may be a client to one application but a server to another. The term "client" also encompasses software that makes the connection between a requesting application, program, process or device to a server possible, such as an FTP client.

The terms "connected" or "coupled" and related terms are used in an operational sense and are not necessarily limited to a direct connection or coupling. Thus, for example, two devices may be coupled directly, or via one or more intermediary media or devices. As another example, devices may be coupled in such a way that information can be passed there between, while not sharing any physical connection with one another. Based on the disclosure provided herein, one of ordinary skill in the art will appreciate a variety of ways in which connection or coupling exists in accordance with the aforementioned definition.

The phrases "in one embodiment," "according to one embodiment," "and the like" generally mean the particular feature, structure, or characteristic following the phrase is included in at least one embodiment of the present invention, and may be included in more than one embodiment of the present invention. Importantly, such phrases do not necessarily refer to the same embodiment.

If the specification states a component or feature "may", "can", "could", or "might" be included or have a characteristic, that particular component or feature is not required to be included or have the characteristic.

The term "server" generally refers to an application, program, process or device in a client/server relationship that responds to requests for information or services by another program, process or device (a server) on a network. The term "server" also encompasses software that makes the act of serving information or providing services possible.

The term "cluster" generally refers to a group of firewall security devices that act as a single virtual firewall security device to maintain connectivity even if one of the firewall security devices in the cluster fails.

The term "cluster unit" generally refers to a firewall security device operating in a firewall security device High Availability (HA) cluster.

The term "failover" generally refers to a firewall security device taking over processing network traffic in place of another unit in the cluster that suffered a device failure or a link failure.

The term "failure" generally refers to a hardware or software problem that causes a firewall security device to stop processing network traffic.

The term "heartbeat" is also called HA heartbeat. The heartbeat constantly communicates HA status and synchronization information to make sure that the cluster is operating properly.

The term "heartbeat failover" generally refers to a mechanism in which if an interface functioning as the heartbeat device fails, the heartbeat is transferred to another interface also configured as an HA heartbeat device.

The term "High Availability" generally refers to an ability that a cluster has to maintain a connection when there is a device or link failure by having another unit in the cluster take over the connection, without any loss of connectivity. To achieve high availability, all firewall security devices in the cluster share session and configuration information.

The term "firewall security device" generally refers to a logical or physical device that provides firewall security functionality by implementing various firewall policies; however, a firewall security device is not limited to performing firewall

security functionality and may perform other content processing functions, including, but not limited to scanning/processing of web (HTTP), file transfer (FTP), and email (SMTP, POP3, and IMAP), antivirus processing, intrusion prevention and hardware acceleration. In some embodiments, the firewall security devices are specialized processing blades installed within a chassis that also includes a load balancing hub blade, such as a sophisticated Ethernet switching device. In some embodiments, a physical device (e.g., a processing blade) may include multiple virtual systems that operate as firewall security devices.

The term "switching device" generally refers to a multi-port bridge. For example, a switching device may be an active element working on layer 2 of the Open Systems Interconnection (OSI) model. Switching devices may use filtering/switching techniques that redirect data flow to a particular firewall security device, based on certain elements or information found in network traffic data packets. In one embodiment, a switching device distributes network traffic data packets among its ports (and associated firewall security devices) depending upon the content, elements or information associated with the packet and/or packet header, including, but not limited to a source or destination address, a source or destination port and the like. According to one embodiment, a predetermined or configurable n-bit hash value can be emulated based on a selection of n bits from one or more of the packet type, the source or destination port (e.g., TCP port), the source or destination address (e.g., IP address), or arbitrary bits associated with or in the packet and/or the packet header.

The term "load balancing table" generally refers to a data structure that contains a mapping between a hash value or emulated "hash" (e.g., one or more bits of the address contained in the data packet) and one or more ports on the switching device. The switching device uses the load balancing table for balancing data traffic load among various firewall security devices.

FIG. **1** is a block diagram conceptually illustrating a simplified network architecture **100** in which embodiments of the present invention may be employed. Network **100** includes a private or public network, such as a local area network (LAN), wide area network (WAN) or the Internet **102**, a router **104**, a switching device **106**, a firewall security system **108**, an internal switching device **110**, an internal network **112**, and one or more external client devices, such as, a client devices **118***a-c*., a client device **118***b*, and a client device **118***c*, and so forth. Further, internal network **112** includes one or more computer systems, such as, computer systems **114***a-c*, hereinafter referred to as the one or more computer systems **114**.

Switching device **106** is connected to Internet **102** through router **104**. According to one embodiment, switching device **106** is configured to perform sophisticated load balancing. For example, switching device **106** may implement a load balancing methodology that enables it to distribute network traffic among multiple firewall security devices (not shown) that have highly varying processing capabilities. In this manner, different traffic types and/or different logical or physical interface groups of the switching device **106** may be load balanced.

Firewall security system **108** is connected to switching device **106**. Internal network **112** is connected to firewall security system **108** through internal switching device **110**. Switching device **106** connects internal network **112** to Internet **102** through firewall security system **108** and internal switching device **110**. Further, the one or more external client devices, such as, client device **118***a-c*, client device **118***b*, and client device **118***b*, hereinafter referred to as the one or more client devices **118**, are connected to Internet **102**.

One or more computer systems **114** are connected in a local area network (LAN). In another embodiment of the present invention, one or more computer systems **114** are connected in a wireless LAN (WLAN). It will be apparent to a person ordinarily skilled in the art that one or more computer systems **114** may also be connected in other network configurations without deviating from the scope of the present invention.

In an exemplary embodiment of the present invention, one or more computer systems **114** may form a part of an office or enterprise network. In another embodiment of the present invention, one or more computer systems **114** may form a part of a home network.

According to various embodiments of the present invention, one or more computer systems **114** are configured to function as client devices. In another embodiment of the present invention one or more computer systems **114** are configured to function as server computers. In yet another embodiment of the present invention, one or more computer systems **114** may comprise a combination of the client devices and server computers. Further, the server computers may be located at a datacenter, in which the datacenter is a facility where multiple computer systems and associated supporting systems, such as, telecommunications and storage systems are hosted. Further, the datacenter may include various backup power supplies, several data communication connectors, security systems and environmental controls, such as, air conditioning and fire suppression. The datacenter may occupy one room of a building, one or more floors, or may be an entire building. The one or more servers may be mounted in one or more rack cabinets.

In an embodiment of the present invention, firewall security system **108** includes a single firewall security device (not shown). In yet another embodiment of the present invention, firewall security system **108** includes more than one firewall security device, in which some subset are redundant firewall security devices. According to various embodiments of the present invention, the one or more firewall security devices in firewall security system **108** are grouped into arranged in one or more clusters (not shown). In some implementations, the firewall security devices comprise processing blades and one or more spare processing blades are installed in the system but not assigned to any particular cluster. In some embodiments, firewall security devices may be reassigned from one cluster to another cluster responsive to a change in load.

According to various embodiments of the present invention, firewall security system **108** implements firewall policies. The firewall policies are configured to protect the resources or applications hosted by one or more computer systems **114** from outsiders and to control what users of one or more client devices **118** have access to by enforcing security policies. Firewall security system **108** may filter or disallow unauthorized or potentially dangerous material or content from reaching one or more computer systems **114**. Further, firewall security system **108** may limit data communication between one or more computer systems **114** and Internet **102** in accordance with local security policy established and maintained by an administrator.

In an embodiment of the present invention, firewall security system **108** may implement various techniques to control data flow. Following are the examples of such techniques:

Packet filter: firewall security system **108** may look at each packet entering or leaving the network and accept or reject it based on user-defined rules. Packet filtering is fairly effective and transparent to users, however, it is difficult to configure. In addition, it is susceptible to Internet Protocol (IP) spoofing.

Application gateway: firewall security system **108** may apply security mechanisms to specific applications, such as file transfer protocol (FTP) and Telnet servers. This is very effective, however, can impose performance degradation.

Circuit-level gateway: firewall security system **108** may apply security mechanisms when a transmission control protocol (TCP) or User Datagram Protocol (UDP) connection is established.

Proxy server: firewall security system **108** may intercept all messages entering and leaving the network. The proxy server effectively hides the true network addresses.

Firewall policies are instructions that firewall security system **108** uses to decide what to do with a connection request. When firewall security system **108** receives a connection request in the form of a packet, it analyzes the packet to extract its source address, destination address, and service (for example, by port number). Firewall security system **108** allows a packet to be connected when the source address, the destination address, and the service of the packet is consistent with a firewall policy (for example, when they match that of the firewall policy). The policy directs the firewall action on the packet. The action can be to allow the connection, deny the connection, and require authentication before the connection is allowed, or process the packet as an IPSec VPN packet.

In an exemplary embodiment of the present invention, firewall security system **108**, uses one or more antivirus firewall devices, such as a FORTIGATE antivirus firewall solution provided by Fortinet, Inc. of Sunnyvale, Calif. (FORTIGATE is a trademark or registered trademark of Fortinet, Inc.).

Preferably, the antivirus firewall devices are dedicated easily managed security devices that deliver a full suite of capabilities that include: application-level services, such as virus protection and content filtering, network-level services such as firewall, intrusion detection, VPN, and traffic shaping. The above mentioned applications and services are further explained in the following description.

Antivirus protection: According to one embodiment, antivirus protection scans web (HTTP), file transfer (FTP), and email (SMTP, POP3, and IMAP) content as it passes through the antivirus firewall device. The antivirus protection may use pattern matching and/or heuristics to find viruses. If a virus is found, in one embodiment, the antivirus protection removes the file containing the virus from the content stream and forwards a replacement message to the intended recipient. For extra protection, one can configure antivirus protection to block specified file types from passing through the antivirus firewall device. This feature can be used to stop files that might contain new viruses.

Web content filtering: Web content filtering functionality may be configured to scan all or some subset of HTTP content protocol streams for URLs, URL patterns, and/or web page content. If there is a match between a URL on the URL block list, or a web page contains a word or phrase that is in the content block list, the antivirus firewall device may be configured to block the web page.

Spam filtering: Spam filtering functionality may be configured to scan all or some subset of POP3, SMTP, and IMAP email content for spam. Spam filtering can be configured to filter mail according to IP address, email address, mime headers, and content. Mail messages can be identified as spam or clear.

After basic installation of the antivirus firewall device, it allows users on the protected network to access the Internet while blocking Internet access to internal networks.

Switching device **106** connects internal network **112** to Internet **102** through firewall security system **108**. In an exemplary embodiment of the present invention, switching device **106** may be a network switch. The network switch may comprise a multi-port bridge. That is, the switching device **106** may be an active element working on layer 2 of the Open Systems Interconnection (OSI) model. The network switch uses filtering/switching techniques that redirect data flow to a particular firewall security device in firewall security system **108**, based on certain elements found in network traffic data packets. The network switch distributes the network traffic data packets among its ports depending upon the information, e.g., a source and a destination address contained in the network traffic data packets. The network switch is capable of determining the destination of each individual traffic data packet and selectively forwarding traffic data packet to the one security device at which the data packet is required to be sent. Once the network switch knows a destination port, it only sends the message to the right port, and the other ports are then free for other transmissions that may be taking place at the same time. Subsequently, each data exchange can run at the nominal transfer rate leading to more bandwidth sharing, without collisions, with the end result being a very significant increase in the network's bandwidth.

One or more client devices **118** are connected to switching device **106** over Internet **102**. Examples of one or more client devices **118** include a desktop computer, a laptop, a notebook computer, a handheld device, such as, a mobile phone, a smart phone, a palm-top computer, Personal Digital Assistant (PDA), a navigational unit, and so forth without deviating from the scope of the invention. Further, FIG. **1** illustrates only three client devices; however, it will be apparent to a person ordinarily skilled in the art that there can be any number of client devices connected to Internet **102**. One or more client devices **118** may run various applications, such as, a web browser, multiplicity of software applications, email applications, online chat applications, and so forth. Further, one or more client devices **118** may run other applications that may use Internet **102**.

The applications running on one or more client devices **118**, as explained above, may require accessing various services being hosted by one or more computer systems **114**. In an exemplary embodiment of the present invention, a user operating client device **118*a*** runs a search query using the web browser application. The search query is intended to identify several images that satisfy search criteria as mentioned in the search query by the user. Router **104** connected to Internet **102** checks whether the query data packet is intended for internal network **112** by checking a destination contained in the query data packet and accordingly forwards the query data packet to switching device **106**. As discussed above, switching device **106**, upon receipt of such data packet, analyzes the data packet and forwards the data packet to one of the firewall security devices in firewall security system **108**. Firewall security system **108** analyzes the content of the data packet to check for any harmful data. Firewall security system **108** may then forward the data packet to a computer system, such as, computer system **114*a*** in internal network **112**, accordingly.

In response to the data packet received, computer system **114*a***, supplies the required image data to client **118*a*** through internal switching device **110**, firewall security system **108**, and switching device **106**. In this case, computer **114*a*** may function as a server computer system. In an exemplary embodiment of the present invention, internal switching device **110** may be a network switch.

FIG. **2** is a block diagram conceptually illustrating a switching device connected to firewall security devices arranged in clusters in accordance with an embodiment of the

present invention. Firewall security system **108** includes one or more firewall security devices such as firewall security devices **208***a-n*, hereinafter referred to as the one or more firewall security devices **208**.

In an embodiment of the present invention, one or more firewall security devices **208** are connected to switching device **106**. Firewall security system **108** includes load balancing clusters **210***a* and **210***b*. Cluster **210***a* includes firewall security devices **208***a-c*. Further, cluster **210***b* includes firewall security devices **208***d-n*. It will be apparent to a person ordinarily skilled in the art that there can be any number of firewall security devices in one cluster. In an exemplary embodiment of the present invention, firewall security devices **208***a-c* in cluster **210***a* are employed for addressing/providing firewall security for email data traffic. Similarly, firewall security devices **208***d-n* in cluster **210***b* are employed for addressing/providing firewall security for HTTP/web data traffic.

In an embodiment of the present invention, one or more firewall security devices **208** are located at a datacenter. As discussed in conjunction with FIG. **1**, the datacenter may be a facility where multiple computer systems and associated supporting systems such as telecommunications and storage systems are hosted. One or more firewall security devices **208** may be installed in one or more specialized racks such as chassis. A rack provides slots for mounting one or more firewall security devices **208**. In an exemplary embodiment of the present invention, the rack may contain twelve slots for mounting one or more firewall security devices **208**. In an embodiment of the present invention, switching device **106** may be mounted on the rack. Further, it will be apparent to a person ordinarily skilled in the art that switching device **106** may be mounted separately from one or more firewall security devices **208**. In an exemplary embodiment of the present invention, the rack is a FORTIGATE-5140 chassis. In yet another exemplary embodiment of the present invention, the rack is a FORTIGATE-5050 chassis. In an exemplary embodiment of the present invention, firewall security device **208***a* is a FORTIGATE-5001A. In another exemplary embodiment of the present invention, firewall security device **208** is a FORTIGATE-5000. In an exemplary embodiment of the present invention, switching device **106** is a FORTISWITCH-5003A (FORTISWITCH is a trademark or registered trademark of Fortinet, Inc. of Sunnyvale, Calif.). In another exemplary embodiment of the present invention, switching device **106** is a FORTISWITCH-5003.

Switching device **106** may be configured to determine which slots on the rack will be part of which cluster. For example, the one or more firewall security devices mounted in the first six slots of the twelve slots may form cluster **210***a*, and the remaining firewall security devices can be mounted in remaining slots to form cluster **210***b*. While only two clusters have been shown in FIG. **2**, it will be apparent to a person having ordinary skill in the art that there can be more than two clusters without deviating from the scope of the invention. Additionally, the number of firewall security devices present in the one or more clusters, such as, cluster **210***a* and cluster **210***b*, can vary and may be more or less than three.

In an embodiment of the present invention, firewall security devices **208***a* and **208***b* are initially present in cluster **210***a*, and firewall security device **208***c* is added later to cluster **210***a*. According to one embodiment, when a new firewall security device, such as, firewall security device **208***c* is mounted in a slot which is a part of cluster **210***a*, switching device **106** sends one or more control messages to firewall security device **208***c*. The control messages are intended for configuring firewall security device **208***c* to enter into a load balancing mode.

In response to the reception of such control messages, firewall security device **208***c* synchronizes its operation with other cluster members, such as, firewall security device **208***a* and firewall security device **208***b*. In an embodiment of the present invention, firewall security device **208***c* exchanges multiple synchronization messages with firewall security device **208***a* and firewall security device **208***b*.

After synchronizing the operation with other cluster members, firewall security device **208***c* creates a virtual local area network (VLAN) device. This VLAN device is intended to represent a port on switching device **106**. According to an embodiment of the present invention, firewall security device **208***c* creates two VLAN devices. In an embodiment of the present invention, these two interfaces may form a link aggregation group (LAG). In another embodiment of the present invention, more than two VLAN interfaces are created by firewall security device **208***c*. Further, these VLAN interfaces may form the LAG. LAG is defined under the link aggregation control protocol (LACP)—IEEE standard 802.3ad, which is hereby incorporated by reference in its entirety for all purposes.

Firewall security device **208***c* then sends heartbeat signals to switching device **106**. The heartbeat signal constantly communicates status and synchronization information from firewall security device **208***c* in order to ensure proper functioning. The heartbeat signal may comprise hello packets that are sent at regular intervals on a heartbeat interface of firewall security device **208***c*. These hello packets describe the state of firewall security device **208***c* and are also used by other cluster units to keep all cluster units synchronized.

According to an embodiment of the present invention, after the successful reception of heartbeat signals, switching device **106** includes the data corresponding to the newly added firewall security device **208***c* in a load balancing table (not shown). In another embodiment of the present invention, switching device **106** may keep firewall security device **208***c* in a standby mode and brings it in use when any firewall security device in cluster **210***a* fails. An exemplary load balancing table is further described in conjunction with FIG. **3** and FIG. **4**.

Switching device **106** implements a load balancing function for balancing data traffic load between one or more firewall security devices **208**. Depending upon the particular implementation and the particular networking environment, the load balancing function may be configured to address issues relating to highly varying processing capabilities in the firewall device systems and/or the differences in processing required for various forms of network traffic (e.g., depending upon the complexity and type). Further details of the load balancing function, in accordance with an embodiment of the present invention, are explained in detail in conjunction with FIG. **3**. In brief, switching device **106** analyzes the data traffic received from one or more client devices **118**, in order to distribute the data traffic to one or more firewall security devices **208**. In an embodiment of the present invention, the load balancing function operates on the address information contained in the data packets received from one or more client devices **118**. Based on the hash of one or more bits of the address field, switching device **106** decides on which port to redirect the data traffic. Thus, the firewall security device configured on the port to which the data traffic is redirected attends to and processes the data traffic.

In an embodiment of the present invention, the data packet returning from internal network **112** to one or more client

devices **118** may not need to be load balanced. The data packet is sent to a port on switching device **106** whose VLAN address matches with a VLAN tag contained in the data packet.

In an embodiment of the present invention, targeted session synchronization is performed among one or more firewall security devices **208**. One or more Firewall security devices **208** are capable of remembering the load balancing function as well as results of the load balancing function for which the data traffic was redirected to it. If a need arises for redirecting the transfer of the data traffic which was originally handled by firewall security device **208***a* to firewall security device **208***c*, both firewall security devices, firewall security device **208***a* and firewall security device **208***c*, will synchronize all sessions for that specific load balancing function's result. Thus, firewall security device **208***c* would presumably have the sessions ready for accepting the new data traffic, causing minimal session loss.

In an embodiment of the present invention, graceful start-up of a new firewall security device in a cluster may be implemented based on the targeted session synchronization functionality as discussed above. According to one embodiment, when a new firewall security device, such as firewall security device **208***c*, is ready to be a part of cluster **210***a*, after completing configuration, switching device **106** determines which firewall security device's data traffic load will be handled by the new firewall security device **208***c*. For example, if it is determined by switching device **106** that firewall security device **208***c* will take a data traffic load being handled by firewall security device **208***a*, then, as discussed above, targeted session synchronization is performed between firewall security device **208***c* and firewall security device **208***a*. As a result of such targeted session synchronization, sessions handled by both firewall security device **208***a* and firewall security device **208***c* get synchronized. Hence, new firewall security device **208***c* can be added to cluster **210***a* causing minimal session loss. In this manner, a mechanism is provided which allows real-time traffic redistribution as a result of an in service addition of one or more processing blades, for example, with minimal disruption.

In another embodiment of the present invention, graceful shutdown of an existing firewall security device in a cluster may be implemented based on the targeted session synchronization functionality as discussed above. When a firewall security device, such as, firewall security device **208***a*, is about to shutdown, it indicates that to switching device **106**. For example, firewall security device **208***a* sends a shutdown indication message to switching device **106** before shutdown. Switching device **106** then determines a firewall security device that can take the data traffic being handled by firewall security device **208***a*. For example, switching device **106** determines that firewall security device **208***c* can take the data traffic being handled by firewall security device **208***a*, then, as discussed above, the targeted session synchronization is performed between them. As a result of such targeted session synchronization, sessions handled by both firewall security device **208***a* and firewall security device **208***c* get synchronized and the load balancing table will be updated accordingly. Subsequently, firewall security device **208***a* can shutdown without causing significant traffic loss.

Various embodiments of the present invention provide high availability (HA) clusters of firewall security devices for load balancing in a network. An HA cluster provides enhanced reliability and increased performance, the two key requirements of critical enterprise networking. Load balancing in HA is implemented by configuring a plurality of firewall security devices in an HA cluster. In the network, HA clusters process network traffic and provide normal security services such as firewalling, VPN, IPS, virus scanning, web filtering, and spam filtering services.

Further, if one cluster unit fails, such as firewall security device **208***a*, another unit, such as firewall security device **208***c* in cluster **210***a*, automatically replaces firewall security device **208***a*, taking over the work that firewall security device **208***a* was performing. After the failure, the cluster continues to process network traffic and provide normal firewall security services with virtually no interruption.

One or more firewall security devices **208** can operate in active-passive HA or active-active HA mode. Active-passive HA mode provides failover protection. Active-active HA mode provides load balancing as well as failover protection. These are further explained in the following description.

In an embodiment of the present invention, cluster **210***a* may function in active-passive HA mode. The active-passive HA cluster provides hot standby failover protection. The active-passive HA cluster **210***a* consists of a primary unit that processes traffic and one or more subordinate units that do not process traffic. In an embodiment of the present invention, firewall security device **208***a* may function as the primary unit and firewall security device **208***b* and firewall security device **208***c* may function as subordinate units. The subordinate units run in a standby state. In the standby state, the subordinate units receive cluster state information from the primary unit. Cluster state information includes a list of all communication sessions being processed by the primary unit. The subordinate units use this information to resume processing network traffic if the primary unit fails. Active-passive HA can be used for a more resilient session failover environment than active-active HA. In active-passive HA, session failover occurs for all traffic except for virus scanned sessions that are in progress.

In an embodiment of the present invention, cluster **210***a* may function in active-active HA mode. In this mode, network traffic is load balanced among all cluster units, such as firewall security device **208***a*, firewall security device **208***b*, and firewall security device **208***c*. The active-active HA cluster **210***a* consists of a primary unit that processes traffic and one or more subordinate units that also process traffic. In an embodiment of the present invention, firewall security device **208***a* may act as the primary unit and firewall security device **208***b* and firewall security device **208***c* may function as subordinate units.

In an embodiment of the present invention, the primary unit receives all network traffic. All user datagram protocol (UDP), Internet control message protocol (ICMP), multicast, and broadcast traffic is processed by the primary unit. The primary unit load balances virus scanning traffic, or optionally all TCP traffic and virus scanning traffic, among all cluster units. By distributing TCP and virus scanning among multiple cluster units, an active-active cluster may have higher throughput than a standalone firewall security device **208***a* or than an active-passive cluster. In addition to load balancing, active-active HA also provides device and link failover protection similar to an active-passive cluster. If the primary unit fails, a subordinate unit becomes the primary unit and redistributes TCP communication sessions among all remaining cluster units. UDP, ICMP, multicast and broadcast sessions and virus scanned sessions that are in progress are not failed over and must be restarted. Since, UDP, ICMP, multicast, and broadcast traffic are not failed over, active-active HA is a less robust failover solution than active-passive HA. If a subordinate unit fails, the primary unit redistributes all TCP communication sessions among the remaining cluster units. Virus scanned sessions that are in progress on the

subordinate unit are not failed over and must be restarted. UDP, ICMP, multicast, and broadcast sessions being processed by the primary unit are not affected.

According to one embodiment, to facilitate seamless failover, cluster members may buffer data transfers to external storage (e.g., shared RAM or external disk) that can be accessed by all the cluster members.

In one embodiment, the load balancer (e.g., switching device **106**) could have load balancing sessions. Incoming traffic may be checked against these sessions, and if the traffic matches a session it is forwarded to the port in the session, and potentially VLAN tagged. If there is a session match, the load balancing hashing function need not be reached/used. If there was no session match, the traffic can be handled by the load balancing hash function as described further below.

Such load balancing sessions can be created/destroyed/updated in several ways, including, but not limited to:

- inspection of the header data of traffic by the load balancing device, creating/deleting sessions based on traffic exiting the cluster of firewall security systems, so that return traffic will be directed to the switch that is processing the original traffic.
- explicitly creating/deleting/updating the sessions based on creation/deletion/update commands sent from the firewall security systems, or other load balancing devices, to the load balancing device.
- synchronization of the sessions from another load balancing device.

According to one embodiment, using the load balancing sessions feature, the graceful shutdown, and startup of blades can be enhanced, by changing the hashing function immediately but keeping the existing sessions in place. In this manner, new traffic will be sent to the new "owner" of the hash result, but existing sessions will still go to the old "owner". To further enhance graceful shutdown, the load balancing switch could prevent the blade shutting down from completing shutdown until all of the sessions related to it have be destroyed or expired. The adaptive load balancing would work similarly to graceful startup/shutdown. With the hash results being swapped immediately, but existing sessions would remain.

In one embodiment, using the session based system traffic that arrives on a firewall blade that cannot be handled by that blade can be redirected to a blade (or cluster), that can handle the traffic, and the firewall blade can send a command to the load balancing switch to create a session redirecting all traffic to the blade (or cluster), that can handle the traffic. For example, assuming two clusters, a load balanced cluster and a cluster of firewall blades in HA that are being used to handle IPSec tunnels. If an IPSec packet is erroneous sent to the load balanced cluster, the load balanced cluster could encapsulate the traffic in a VLAN (or other protocol) and redirect it to the IPSec cluster, while also commanding the load balancing switch to install a session redirecting that particular IPSec session to the IPSec cluster.

In one embodiment, the load balancing switch can be used in a management gateway to the firewall blades. For example, the base channel network may be used as the management network, and the switch provides direct access to the network, as well as Network Address Translated (NAT'ed) access to the network via a shared IP address on the switch's management interfaces.

In one embodiment, the router **104** (or other network hardware) before the switching device **106** can mark (e.g., set a bit pattern in the header of) certain traffic, so that the switching device can use that mark to redirect packets to different hashing algorithms or different clusters or firewall units.

FIG. **3** is a block diagram conceptually illustrating interaction among various functional units of a switching device **106** in accordance with an embodiment of the present invention. Switching device **106** includes a control message communication module **302**, a heartbeat signal management module **304**, a data packet buffer **306**, an address extraction module **308**, a load balancing module **310**, one or more ports **320**, a VLAN tagging module **322**, and a traffic management module **324**. Load balancing module **310** further includes a hash bit configuration module **312**, a rule assignment module **314**, an action assignment module **316**, and a load balancing table **318**. One or more ports **320** include ports, such as, port **320***a*, port **320***b*, port **320***c*, port **320***d*, and port **320***n*.

According to one embodiment, control message communication module **302** initiates the load balancing configuration of a newly installed firewall security device such as, firewall security device **208***c* when it is mounted on a rack (chassis). Control message communication module **302** sends one or more control messages to firewall security device **208***c* in order to configure firewall security device **208***c* for load balancing in a cluster, such as cluster **210***a*. Further, as discussed with reference to FIG. **2**, after synchronizing the operation with other cluster members, firewall security device **208***c* creates a VLAN device that corresponds to a port, such as port **320***c* of the one or more ports **320**. Further, in another embodiment of the present invention, two VLAN devices may be created by firewall security device **208***c*, which may represent a pair of ports from the one or more ports **320**. In an embodiment of the present invention, these two interfaces may form a link aggregation group (LAG). In another embodiment of the present invention, more than two VLAN interfaces are created by firewall security device **208***c*. Further, these VLAN interfaces may form the LAG. After the creation of VLAN devices by firewall security device **208***c*, VLAN tagging module **322** assigns corresponding VLAN identifiers (IDs) to one or more ports **320**.

Further, as discussed in conjunction with FIG. **2**, after creation of the VLAN devices, heartbeat signal management module **304** receives heartbeat signals from firewall security device **208***c*. Thus, based on such successful reception of the heartbeat signals from firewall security device **208***c*, load balancing table **318** gets updated by including information of newly configured firewall security device **208***c*.

Load balancing module **310** configures a load balancing function, in order to distribute data packets received by data packet buffer **306**. In an embodiment of the present invention, the load balancing function is a hash function or an emulated hash.

Hash bit configuration module **312** enables an administrator of the network to configure the hash bit value (e.g., the number of bits of information from or otherwise associated with a packet and/or a packet header to be used in connection with the "hash"). In an embodiment of the present invention, the hash bit value is five. In an embodiment of the present invention, hash bit configuration module **312** also allows the administrator to choose one or more bits of an address field for hashing. In another embodiment of the present invention, hash bit configuration module **312** also allows the administrator to choose at least one of a source address or destination address for hashing. In yet another embodiment of the present invention, hash bit configuration module **312** allows the administrator to choose one or more arbitrary bits from the data packet for hashing.

Rule assignment module **314** enables the administrator of the network to configure a rule for generating one or more outcomes. In an exemplary embodiment of the present invention, the rule is

$$f(x)=D_N*2^N+D_{N-1}*2^{N-1}+\ldots+D_2*2^2+D_1*2^1+D_0*2^0;$$

Where N=value of hash bit.

It will be apparent to the person ordinarily skilled in the art that rule assignment module **314** enables the administrator of the network to configure different types of rules without deviating from the scope of the invention.

In an exemplary embodiment of the present invention, a predetermined number, N, of bits of the destination address (D_X, D_{X-1}, D_{X-2}, . . . , $D_{X-(N-1)}$) are selected by the administrator for the purpose of emulating a hash. Based on the N bits, 2^N outcomes can be obtained and a rule can be assigned to each to determine whether to perform a particular action, e.g., redirecting the traffic to a particular port of the switching device. According to one embodiment, a 32-value hash may be emulated by picking the initial five bits from the destination address (D_4, D_3, D_2, D_1, D_0). Notably, the bits need not be adjacent or consecutive. Further, it will be apparent to a person ordinarily skilled in the art that any combination of bits can be selected by the administrator without limiting the scope of the invention and without deviating from the scope of the invention. For example, the hash could be based on other values associated with or in the packet or combinations of values associated with or in the packet and/or packet header, including, but not limited to the packet type, the source or destination port (e.g., TCP port), the source or destination address (e.g., IP address), the protocol, the type of service or arbitrary bits in the packet.

According to one embodiment, the hash function is dynamically adjusted to match the actual traffic. A feedback loop may be provided based on observed traffic load of each cluster member. For example, the switching device **106** (e.g., an external switching device or a management blade of a chassis-based system) may monitor the traffic load of each cluster member and compare it to an ideal distribution and the hash function may be dynamically adjusted to improve overall system performance.

Notably, in an environment in which a physical device may have multiple virtual firewall security devices, the feedback mechanism described would take into consideration that a physical device could have a virtual system belonging to multiple clusters, and a switch employing a balancing algorithm would consider the load on the system as a whole.

Action assignment module **316** assigns an action to each of the generated outcomes. In an embodiment of the present invention, the action specifies a port of one or more ports **320** for each outcome. In an embodiment of the present invention, each outcome is assigned a port from one or more ports **320**. Also, action assignment module **316** updates load balancing table **318** after the allocation of ports for all outcomes. Thus, load balancing table **318** includes information corresponding to mapping between one or more ports **320** on switching device **106** and one or more bits of addresses contained in the data packet received from one or more client devices **118**. Further, one or more ports **320** are connected to corresponding firewall security devices **208**. Load balancing table **318** is further described conjunction with FIG. **4**.

Data packet buffer **306** receives a data packet being sent by one or more client devices such as one or more client devices **118**. The data packet may represent a request for accessing information from one or more computer systems, such as one or more computer systems **114** form an internal network, for example internal network **112**. Further, data packet buffer **306** forwards the received data packet to address extraction module **308**. Various examples of the data packet type are IPv4, IPv6, non-IP (e.g., media access control (MAC) for layer 2 (L2) traffic) and so forth. It will be apparent to a person ordinarily skilled in the art that the invention is not limited with respect to the type of data packet, and that other types of data packets may be received by data packet buffer **306** without deviating from the scope of the invention.

FIG. **17** illustrates a format of an Internet Protocol (IP) version 4 (IPv4) data packet **1700**.

Following is the description of each field in IPv4 data packet **1700**.

- Version **1710** (always set to the value 4 in the current version of IP)
- IP Header Length (HLen) **1715** (number of 32-bit words forming the header, usually five)
- Type of Service (ToS) **1720**, now known as Differentiated Services Code Point (DSCP) (usually set to 0, but may indicate particular Quality of Service needs from the network, the DSCP defines the way routers should queue packets while they are waiting to be forwarded).
- Size of Datagram **1725** (in bytes, this is the combined length of the header and the data)
- Identification **1730** (16-bit number which together with the source address uniquely identifies this packet—used during reassembly of fragmented datagrams)
- Flags **1735** (a sequence of three flags (one of the 4 bits is unused) used to control whether routers are allowed to fragment a packet (i.e. the Don't Fragment, DF, flag), and to indicate the parts of a packet to the receiver)
- Fragmentation Offset **1740** (a byte count from the start of the original sent packet, set by any router which performs IP router fragmentation)
- Time To Live (TTL) **1745** (Number of hops/links which the packet may be routed over, decremented by most routers—used to prevent accidental routing loops)
- Protocol **1750** (Service Access Point (SAP) which indicates the type of transport packet being carried (e.g. 1=ICMP; 2=IGMP; 6=TCP; 17=UDP).
- Header Checksum **1755** (A 1's complement checksum inserted by the sender and updated whenever the packet header is modified by a router—Used to detect processing errors introduced into the packet inside a router or bridge where the packet is not protected by a link layer cyclic redundancy check. Packets with an invalid checksum are discarded by all nodes in an IP network)
- Source Address **1760** (the IP address of the original sender of the packet)
- Destination Address **1765** (the IP address of the final destination of the packet)
- Options **1770** (not normally used, but, when used, the IP header length **1715** will be greater than five 32-bit words to indicate the size of the options field **1770**)

Address extraction module **308** works in conjunction with load balancing module **310**. Address extraction module **308** extracts address information based on the configuration setting done by the administrator as discussed above. For example, if the administrator has configured a hash bit value as five and elected to perform load balancing based on the destination address, such as the destination address as shown in the IPv4 data packet, then address extraction module **308** extracts five bits from the destination address. In an embodiment of the present invention, address extraction module **308** extracts from the data packet the configured hash bits whether they are part of a source or destination address or otherwise as chosen by the administrator. The extracted information is then forwarded to load balancing module **310**.

Load balancing module **310** uses the extracted hash bits (e.g., the five bits of the destination address) to look up the corresponding port information in load balancing table **318**. The data packet is then redirected to the corresponding port of

one or more ports **320**. Subsequently, security checking for the data packet is handled by an associated firewall security device. According to one embodiment, the load balancing table **318** is implemented as a content addressable memory (CAM). For example, load balancing table **318** may comprise one or more ternary CAMs (TCAMs). Those skilled in the art will recognize various other possible implementations for the load balancing table **318**. For example, in alternative embodiments, the load balancing table **318** may be a data structure in volatile or non-volatile storage, including, but not limited to, RAM or flash memory associated with or otherwise accessible to load balancing module **310**.

In an embodiment of the present invention, traffic management module **324**, monitors the amount of data traffic load being handled by each of one or more firewall security devices **208**. Further, traffic management module **324** receives the information about the data traffic load on each of one or more firewall security devices **208** from each of one or more firewall security devices **208**. According to one embodiment, the traffic distribution function may be changed on the fly to allow real-time traffic redistribution responsive to observed data traffic loads as described further below.

According to one embodiment, traffic management module **324** updates load balancing table **318** based on the data traffic load being handled by each of one or more firewall security devices **208**. Hence, traffic management module **324** enables adaptive load balancing among one or more firewall security devices **208**. For example, based on the targeted session synchronization functionality, as discussed in conjunction with FIG. **2**, the data traffic load can be balanced on the fly. Hence, for each outcome, on each port, traffic management module **324** calculates the amount of data traffic being handled. If it is identified by traffic management module **324** that firewall security device **208***a* is overloaded compared to firewall security device **208***c* it would look for a cluster member with a hash result with less data traffic load that could be swapped with the hash result that is overloading firewall security device **208***a*. Ideally, the swapping of these two hash results would make the amount of load experienced by firewall security device **208***a* and firewall security device **208***c* relatively equal. In some cases, multiple hash results can be swapped. For example, a hash result from one firewall security device can be moved and added to another without swapping back to the overloaded firewall security device. Once it is determined which hash results will be swapped among the firewall security devices, targeted session synchronization can be established for each hash result to be swapped. Once the synchronization is established, the data traffic load could be re-balanced without major data traffic interruptions.

In an embodiment of the present invention, traffic management module **324** handles graceful start-up for a new firewall security device, such as firewall security device **208***c*, which is ready to be a part of cluster **210***a*. After completing the configuration, traffic management module **324** determines which firewall security device's load will be handled by the new firewall security device. For example, if it is determined by traffic management module **324** that firewall security device **208***c* will take all or a portion of the data traffic load being handled by firewall security device **208***a*, the targeted session synchronization is performed between them. As a result of such targeted session synchronization, appropriate sessions handled by both firewall security device **208***a* and firewall security device **208***c* get synchronized. Hence, the new firewall security device **208***c* can be added to cluster **210***a* causing minimal session loss.

In an embodiment of the present invention, traffic management module **324** handles graceful shutdown of a firewall security device, such as firewall security device **208***a*. Traffic management module **324** receives a shutdown indication message from firewall security device **208***a* when firewall security device **208***a* is about to shutdown. Traffic management module **324** then determines a firewall security device that can take the data traffic being handled by firewall security device **208***a*. For example, if traffic management module **324** determines that firewall security device **208***b* can take all or some portion of the data traffic being handled by firewall security device **208***a*, then the targeted session synchronization is performed between firewall security devices **208***b* and **208***a* (and others as necessary). As a result of such targeted session synchronization, the relevant sessions handled by both firewall security devices **208***a* and **208***b* get synchronized and load balancing table **318** will be updated by traffic management module **324** accordingly. Subsequently, firewall security device **208***a* can shutdown without causing significant traffic loss.

In one embodiment of the present invention, the functionality of one or more of the above-referenced functional units may be merged in various combinations. For example, data buffer **306** may be incorporated within address extraction module **308** or control message communication module **302** may be incorporated within heartbeat management module **304**. Moreover, the functional units can be communicatively coupled using any suitable communication method (e.g., message passing, parameter passing, and/or signals through one or more communication paths etc.). Additionally, the functional units can be physically connected according to any suitable interconnection architecture (e.g., fully connected, hypercube, etc.). In an exemplary embodiment of the present, one or more of the above-referenced functional units may be implemented in a content aware processor, which may comprise a content addressable memory (CAM), such as a ternary CAM (TCAM).

According to various embodiments of the present invention, the functional modules can be any suitable type of logic (e.g., digital logic) for executing the operations described herein. Any of the functional modules used in conjunction with embodiments of the present invention can include machine-readable media including instructions for performing operations described herein. Machine-readable media include any mechanism that provides (i.e., stores and/or transmits) information in a form readable by a machine (e.g., a computer). For example, a machine-readable medium includes read only memory (ROM), random access memory (RAM), magnetic disk storage media, optical storage media, flash memory devices, electrical, optical, acoustical or other forms of propagated signals (e.g., carrier waves, infrared signals, digital signals, etc.), etc.

FIG. **4** conceptually illustrates a load balancing table **400** maintained by a switching device in accordance with an exemplary embodiment of the present invention.

Load balancing table **400** includes information corresponding to mapping between one or more ports, such as one or more ports **320** on switching device **106** and one or more bits of addresses contained in a data packet received from one or more client devices **118**. Further, one or more ports **320** are connected to corresponding firewall security devices **208**.

In an exemplary embodiment of the present invention, column **402** represents four bits from the address contained in the data packet received from a client device, such as client device **118***a*. As discussed in conjunction with FIG. **3**, the hash bits may be predetermined and/or configurable (e.g., selected by the administrator). In an embodiment of the

present invention, column **402** represents a plurality of bits from the destination address contained in the data packet. In another embodiment of the present invention, column **402** represents a plurality of bits from the source address contained in the data packet. In yet another embodiment of the present invention, column **402** represents a plurality of bits from the combination of the destination address and the source address contained in the data packet. Other combinations of bits are contemplated as indicated above.

Column **404** represents an outcome of the hash function in accordance with an exemplary embodiment of the present invention as discussed in detail in conjunction with FIG. **3**. The following rule has been applied on four bits selected from the destination address to calculate the outcome:

$$f(N)=D_N*2^N+D_{N-1}*2^{N-1}+\ldots+D_3*2^3+D_1*2^1+D_0*2^0;$$

Where N=value of hash bit.

In this case N=4, hence for example, for the address bit combination of (D_3, D_2, D_1, D_0)=1101, the corresponding outcome would be 13. Following is the calculation:

$$f(4) = 1*2^3 + 1*2^2 + 0*2^1 + 1*2^0$$
$$= 13;$$

Column **406** depicts the port assignment configured by an administrator, for example, in accordance with an exemplary embodiment. For example, for the address bit combination of 1101 a port **14** is assigned and all the data traffic containing 1101 bit combination in the respective bits of destination address are redirected to port **14**.

FIGS. **5**A and **5**B conceptually illustrate a front panel **500** of a switching device in accordance with exemplary embodiments of the present invention. As discussed in conjunction with FIG. **2**, an example of a switching device as used in an embodiment of the present invention could be a FORTISWITCH-5003A or a FORTISWITCH-5003 with some modifications as discussed in conjunction with FIG. **3**.

FIG. **5**A depicts a pictorial view of a FORTISWITCH-5003A board. The FORTISWITCH-5003A board provides 10/1-gigabit fabric backplane channel layer-2 switching and 1-gigabit base backplane channel layer-2 switching in a dual star architecture for the FORTIGATE-5140 and FORTIGATE-5050 chassis. The FORTISWITCH-5003A board provides a total capacity of 200 Gigabits per second (Gbps) throughput.

The FORTIGATE-5140 chassis is a 14-slot advanced telecommunications computing architecture (ATCA) chassis and the FORTIGATE-5050 chassis is a 5-slot ATCA chassis. In both chassis the FORTISWITCH-5003A board is installed in the first and second hub/switch fabric slots. A FORTISWITCH-5003A board can be used for fabric and base backplane layer-2 switching for FORTIGATE-5000A boards installed in slots **3** and up in FORTIGATE-5140 and FORTIGATE-5050 chassis. Similarly, a FORTISWITCH-5003A board can also be used for fabric and base backplane layer-2 switching for FORTIGATE-5000 boards installed in slots **3** and up in FORTIGATE-5140 and FORTIGATE-5050 chassis. Usually, the base channel is used for management traffic (for example, the heartbeat signal communication) and the fabric channel for data traffic. FORTISWITCH-5003A boards can be used for fabric and base backplane layer-2 switching within a single chassis and between multiple chassis. The FORTISWITCH-5003A board in hub/switch fabric slot **1** provides communications on fabric channel **1** and base channel **1**. A FORTISWITCH-5003A board in hub/switch fabric slot **2** provides communications on fabric channel **2** and base channel **2**. If the chassis includes one FORTISWITCH-5003A board one can install it in hub/switch fabric slot **1** or **2** and configure the FORTIGATE-5000A boards installed in the chassis to use the correct fabric and base backplane interfaces. Similarly, if the chassis includes one FORTISWITCH-5003A board one can install it in hub/switch fabric slot **1** or **2** and configure the FORTIGATE-5000 boards installed in the chassis to use the correct fabric and base backplane interfaces. For a complete 10-gigabit fabric backplane solution FORTIGATE-5000 hardware can be installed to support 10-gigabit connections. For example, a FORTIGATE-5001A board combined with a FORTIGATE-RTM-XB2 module provides two 10-gigabit fabric interfaces. In particular, one can install FORTIGATE-5001A boards in chassis slots **3** and up and FORTIGATE-RTM-XB2 modules in the corresponding RTM slots on the back of the chassis. The FORTISWITCH-5003A board includes the following features:

- One 1-gigabit base backplane channel for layer-2 base backplane switching between FORTIGATE-5000 boards installed in the same chassis as the FORTISWITCH-5003A
- One 10/1-gigabit fabric backplane channel for layer-2 fabric backplane switching between FORTIGATE-5000 boards installed in the same chassis as the FORTISWITCH-5003A
- Two front panel base backplane one-gigabit copper gigabit interfaces (B**1** and B**2**) that connect to the base backplane channel.

FIG. **5***b* depicts a pictorial view of a FORTISWITCH-5003 board. The FORTISWITCH-5003 board provides base backplane interface switching for the FORTIGATE-5140 chassis and the FORTIGATE-5050 chassis. One can use this switching for data communication or HA heartbeat communication between the base backplane interfaces of FORTIGATE-5000 series boards installed in slots **3** and up in these chassis. FORTISWITCH-5003 boards can be used for base backplane communication in a single chassis or between multiple chassis. FORTISWITCH-5003 boards may be installed in chassis slots **1** and **2**. A FORTISWITCH-5003 board in slot **1** provides communications on base backplane interface **1**. A FORTISWITCH-5003 board in slot **2** provides communications on base backplane interface **2**. In case of a configuration that includes only one FORTISWITCH-5003 board, it can be installed in slot **1** or slot **2** and the FORTIGATE-5000 boards installed in the chassis can be configured to use the correct base backplane interface.

The FORTISWITCH-5003 board includes the following features:

- A total of 16 10/100/1000Base-T gigabit Ethernet interfaces:
- 13 backplane 10/100/1000Base-T gigabit interfaces for base backplane
- switching between FORTIGATE-5000 series boards installed in the same chassis as the FORTISWITCH-5003
- Three front panel 10/100/1000Base-T gigabit interfaces (ZRE0, ZRE1, ZRE2) for base backplane switching between two or more FORTIGATE-5000 series chassis
- One 100Base-TX out of band management Ethernet interface (ETH0)
- RJ-45 RS-232 serial console connection (CONSOLE)
- Mounting hardware
- LED status indicators

FIGS. **6**A, **6**B, and **6**C conceptually illustrates a front panel of a firewall security device in accordance with exemplary embodiments of the present invention.

The FORTIGATE-5001A security system is a high-performance ACTA compliant FORTIGATE security system that can be installed in any ACTA chassis including the FORTIGATE-5140, FORTIGATE-5050, or FORTIGATE-5020 chassis. Further, the FORTIGATE-5001A security system contains two front panel 1-gigabit Ethernet interfaces, two base backplane 1-gigabit interfaces, and two fabric backplane 1-gigabit interfaces. The front panel interfaces are used for connections to networks and the backplane interfaces for communication across the ACTA chassis backplane.

If one installs a FORTIGATE-RTM-XB2 module for each FORTIGATE-5001A board, the FORTIGATE-5001A fabric interfaces can operate at 10 Gbps. The FORTIGATE-RTM-XB2 also provides NP2-accelerated network processing for eligible traffic passing through the FORTIGATE-RTM-XB2 interfaces.

FIG. **6**A depicts a pictorial view of a FORTIGATE-5001A-DW board. The FORTIGATE-5001A-DW (double-width) board includes a double-width Advanced Mezzanine Card (AMC) opening. One can install a supported FORTIGATE ADM module such as the FORTIGATE-ADM-XB2 or the FORTIGATE-ADM-FB8 in the AMC opening. The FORTIGATE-ADM-XB2 adds two accelerated 10-gigabit interfaces to the FORTIGATE-5001A board and the FORTIGATE-ADM-FB8 adds 8 accelerated 1-gigabit interfaces.

FIG. **6**B depicts a pictorial view of a FORTIGATE-5001A-SW board. The FORTIGATE-5001A-SW (single-width) includes a single-width AMC opening. One can install a supported FORTIGATE ASM module such as the FORTIGATE-ASM-FB4 or the FORTIGATE-ASM-S08 in the AMC opening. The FORTIGATE-ASM-FB4 adds four accelerated 1-gigabit interfaces to the FORTIGATE-5001A board and the FORTIGATE-ADM-S08 adds a removable hard disk that one can use to store log files and content archives.

Other than the double-width and single-width AMC openings, the FORTIGATE-5001A-DW and SW models have the same functionality and performance.

FIG. **6**C depicts a pictorial view of a FORTIGATE-5001SX board. The FORTIGATE-5001SX security system is an independent high performance FORTIGATE security system with eight gigabit Ethernet interfaces. Further, the FORTIGATE-5001 SX security system is a high-performance FORTIGATE security system with a total of 8 front panel gigabit Ethernet interfaces and two base backplane interfaces. The front panel interfaces are used for connections to networks and the backplane interfaces for communication between FORTIGATE-5000 series boards over the FORTIGATE-5000 chassis backplane. Two or more FORTIGATE-5001SX boards can also be configured to create a high availability (HA) cluster using the base backplane interfaces for HA heartbeat communication through chassis backplane, leaving all eight front panel gigabit interfaces available for network connections.

FIG. **7** conceptually illustrates connection of firewall security devices with a switching device through rear transition modules (RTM) in accordance with an exemplary embodiment of the present invention.

In this configuration, traffic from the two 10-Gigabit Ethernet links is distributed by FORTISWITCH-5003A **702** to one of the four FORTIGATE-5001A security blades selected from FORTIGATE-5001A **704***a*, FORTIGATE-5001A **704***b*, FORTIGATE-5001A **704***c*, and FORTIGATE-5001A **704***d* through an RTM-XB2 module **706***a*, an RTM-XB2 module **706***b*, an RTM-XB2 module **706***c*, and an RTM-XB2 module **706***d*, hereinafter referred to as RTM-XB2 modules **706**, respectively. The FORTISWITCH-5003A **702** can balance traffic load automatically. Further, the FORTISWITCH-5003A can direct the traffic flows to one of the FORTIGATE blades for security inspection. The traffic flow is routed to the FORTIGATE 5001A security blade via the 10-Gigabit Fabric channel link of RTM-XB2 module. It will be apparent to a person ordinarily skilled in the art that many combinations of FORTIGATE-5000 Series components are possible due to the modular nature of the system. The FORTIGATE-RTM-XB2 system provides two 10-gigabit fabric backplane interfaces for FORTIGATE-5001A boards installed in FORTIGATE-5140 and FORTIGATE-5050 chassis.

FIGS. **8**A and **8**B conceptually illustrate connection of firewall security devices installed on a chassis with a switching device in accordance with exemplary embodiments of the present invention.

FIG. **8**A conceptually illustrates connection of firewall security devices with a switching device in accordance with an exemplary embodiment of the present invention. Installing a single FORTISWITCH-5003 module **802***a* in a FORTIGATE-5140 chassis **800***a* provides a single backplane HA heartbeat communication link **804** for up to 12 FORTIGATE-5001FA2 series modules **806***a* installed in chassis slots **3** to **14**, as illustrated in FIG. **8**A. In an embodiment of the present invention, a single FORTISWITCH-5003 module **802***a* is installed in slot **2** of the FORTIGATE-5140 chassis **800***a*. However, installation of FORTISWITCH-5003 module **802***a* is not limited to slot **2**. In another embodiment of the present invention, a FORTISWITCH-5003 module **802***a* can also be installed in slot **1**. Further, port**9** and port**10** may be default HA heartbeat communication links for FORTIGATE-5001FA2 series modules **806***a*. Various HA heartbeat communication links **804** between FORTIGATE-5001FA2 modules **806***a* and FORTISWITCH-5003 module **802***a* are just for the purpose of illustration only. A FORTISWITCH-5003 module **802***a* installed in slot **2** means an HA cluster of FORTIGATE-5001FA2 series modules **806***a* use port**10** for HA heartbeat communication. Therefore, no change to the FORTIGATE-5001FA2 series module **806***a* default HA heartbeat configuration is required. It will be apparent to a person ordinarily skilled in the art that one or more ports selected from port**2** to port**8** of FORTISWITCH-5003 module **802***a* can be set as HA heartbeat interfaces so that HA heartbeat communication failover to one of these interfaces can be performed if backplane communication fails or is interrupted.

FIG. **8**B conceptually illustrates connection of firewall security devices with a switching device in accordance with another exemplary embodiment of the present invention. FIG. **8**B depicts a FORTIGATE-5050 chassis **800***b* with a FORTISWITCH-5003A module **802***b* in slot **1** and two FORTIGATE-5001A modules **806***b* in slots **3** and **4**. In this configuration, FORTIGATE-5001A modules **806***b* are using base channel **1 808** for HA heartbeat communication. FORTIGATE-5001A module **806***b* uses base channel **1 808** as the HA heartbeat interface. Various HA heartbeat communication links **808** between FORTIGATE-5001A modules **806** and FORTISWITCH-5003A module **802***b* are just for the purpose of illustration only.

FIG. **9** conceptually illustrates connection of firewall security devices with two switching devices in accordance with an embodiment of the present invention.

According to an embodiment of the present invention, active-passive HA configuration can include two switching devices such as switching devices **106***a* and **106***b*. Further,

one or more firewall security devices such as firewall security devices **902***a*, **902***b*, **902***c*, and **902***d*, hereinafter referred to as one or more firewall security devices **902**, are connected to switching devices **106***a* and **106***b*. One or more firewall security devices **902** form an HA cluster.

The heartbeat signals communication between one or more firewall security devices **902** and switching device **106***a* is performed over a heartbeat communication channel **904**. Similarly, the heartbeat signals communication between one or more firewall security devices **902** and switching device **106***b* is performed over a heartbeat communication channel **906**. In an embodiment of the present invention, heartbeat communication channel **904** includes heartbeat signal-carrying wire conductors from each of one or more firewall security devices **902** to switching device **106***a*. Similarly, heartbeat communication channel **906** includes heartbeat signal-carrying wire conductors, other than those used for heartbeat communication channel **904**, from each of one or more firewall security devices **902** to switching device **106***b*.

The data communication between one or more firewall security devices **902** and switching device **106***a* is performed over a data communication channel **908**. The data communication between one or more firewall security devices **902** and switching device **106***b* is performed over a data communication channel **910**. In an embodiment of the present invention, the data communication channel includes an Ethernet connector from each of one or more firewall security devices **902** connected to corresponding port on switching device **106***a* and switching device **106***b*.

In an embodiment of the present invention, switching device **106***a* load balances the data traffic among one or more firewall security devices **902**, while switching device **106***b* remains idle. In another embodiment of the present invention, switching device **106***b* load balances the data traffic among one or more firewall security devices **902**, while switching device **106***a* remains idle. Thus, this configuration provides redundant HA heartbeat communication for one or more security devices **902**. In case switching device **106***a* fails, switching device **106***b* takes charge of load balancing without interrupting the HA heartbeat and data traffic communication.

In an embodiment of the present invention, an additional redundant HA heartbeat communication channel is provided between one or more firewall security devices **902** and switching device **106***a*. Similarly, another additional redundant HA heartbeat communication channel is provided between one or more firewall security devices **902** and switching device **106***b*. Thus, for example, if one HA heartbeat link between firewall security device **902***a* and switching device **106***a* fails, another HA heartbeat link starts communicating the heartbeat signals without interrupting the data traffic flow. Hence, this configuration provides improved reliability in load balancing.

FIG. **10** conceptually illustrates connection of firewall security devices with two switching devices in accordance with an exemplary embodiment of the present invention. FORTISWITCH-5003 modules **1002***a* and 1002*b* installed in slots **2** and **1** respectively provide HA heartbeat communication on port**10** and port**9** of FORTIGATE-5001FA2 modules **1006** installed in slots **3** to **14** in FORTIGATE-5140 chassis **1000**. For example, FORTISWITCH-5003 module **1002***a* is connected on port**10** of each FORTIGATE-5001FA2 modules **1006** for HA heartbeat communication. Various HA heartbeat communication links **1004***a* between FORTIGATE-5001FA2 modules **1006** and FORTISWITCH-5003 module **1002***a* are just for the purpose of illustration only. FORTISWITCH-5003 module **1002***b* is connected on port**9** of each FORTIGATE-5001FA2 modules **1006** for HA communication. Various HA heartbeat communication links **1004***b* between FORTIGATE-5001FA2 modules **1006** and FORTISWITCH-5003 module **1002***b* are just for the purpose of illustration only. Thus, FORTISWITCH-5003 module **1002***b* connected on port**9** of each FORTIGATE-5001FA2 modules **1006** provides redundant HA heartbeat communication. If port**10** fails or becomes disconnected, HA heartbeat communication switches to port**9**.

FIG. **11** is a block diagram conceptually illustrating a simplified network architecture for handling asymmetric network data traffic in accordance with an embodiment of the present invention.

The network includes chassis **1102** including a switching device **1106***a*, such as switching device **106**, and one or more firewall security devices **1108***a*, **1108***b*, and **1108***c*, such one or more firewall security device **208** as discussed in conjunction with FIG. **2**. In addition, chassis **1104** includes a switching device **1106***b*, such as switching device **106**, and one or more firewall security devices **1108***d*, **1108***e*, and **1108***f*, such as one or more firewall security device **208** as discussed in conjunction with FIG. **2**. Further, switching device **1106***a* and switching device **1106***b* each has a unique IP address.

In an embodiment of the present invention, chassis **1102** and chassis **1104** are connected over a network **1100**. In an embodiment of the present invention, the network **1100** is an intranet. In an exemplary embodiment of the present invention, the intranet may be a multiprotocol label switching (MPLS) cloud. In another embodiment of the present invention, the network **1100** is the Internet. In yet another embodiment of the present invention, chassis **1102** and chassis **1104** may be located at different geographic locations. For example, chassis **1102** may be located at a New York based office and chassis **1104** may be located at a San Francisco based office. In an exemplary embodiment of the present invention, load balancing among geographically distributed firewall security devices is a function of a calendaring mechanism. The calendaring mechanism is further explained in the following description.

Normally, Internet data traffic on a given link is approximately symmetric. For example, both directions of a data flow is across the same physical link. However, in some situations return data traffic may not follow the same physical link. Sometimes it becomes difficult to handle such asymmetric data traffic flow. For example, consider a situation where a reply data packet, for a data packet originating from the San Francisco based switching device **1106***b*, is received at the New York based switching device **1106***a*.

An address extraction module, such as address extraction module **308**, in addition to the extraction of the source address and the destination address (as discussed in conjunction with FIG. **3**), checks certain bits of the destination address contained in the received data packet in order to identify if the data packet is intended for another switching device connected over the network **1100**. In this case one or more additional bits of the destination address are checked to see if the data packets are intended for switching device **1106***b* mounted on chassis **1104** which is located at the San Francisco based office. Further, the various other functions of address extraction module **308** have been explained in conjunction with FIG. **3**. It will be apparent to a person ordinarily skilled in the art that the invention is not limited to the extraction of certain bits only from the source address and destination address, however, any other bit(s) from the received data packet may be extracted and checked to determine if the data

packet is intended for another switching device, without limiting the scope of the invention and without deviating from the scope of the invention.

If it is determined by switching device **1106***a* that a data packet was intended to be received by switching device **1106***b*, then the data packet is redirected to switching device **1106**b over network **1100**. Switching device **1106***b* then forwards the data packet to a corresponding firewall security device on chassis **1104** for analyzing the data packet for security check. This configuration provides an active-active HA between the two chassis located at different geographic locations, hence enabling multi-tier load balancing and solving the problem of asymmetric data traffic.

Embodiments of the present invention include various steps, which will be described in more detail below. A variety of these steps may be performed by hardware components or may be tangibly embodied on a computer-readable storage medium in the form of machine-executable instructions, which may be used to cause a general-purpose or special-purpose processor programmed with instructions to perform these steps. Alternatively, the steps may be performed by a combination of hardware, software, and/or firmware.

FIG. **12** is a flow diagram illustrating a method for balancing load among one or more firewall security devices in accordance with an embodiment of the present invention. Depending upon the particular implementation, the various process and decision blocks described below may be performed by hardware components, embodied in machine-executable instructions, which may be used to cause a general-purpose or special-purpose processor programmed with the instructions to perform the steps, or the steps may be performed by a combination of hardware, software, firmware and/or involvement of human participation/interaction.

At block **1204**, a switching device, such as switching device **106**, is configured with one or more firewall security devices, such as one or more firewall security devices **208**. Configuration is performed in order to enable the switching device for balancing data traffic load among the one or more firewall security devices. Further, the configuration of the switching device is explained in conjunction with FIG. **13**.

At block **1206**, a load balancing function is configured in order to distribute the data packets among the one or more ports. As a result of the configuration of the load balancing function, the load balancing table is updated. As discussed in conjunction with FIG. **4**, the load balancing function includes the mapping between the one or more firewall security devices in the cluster, the one or more ports and the address of the incoming data packet. Further, the configuration of the load balancing function has been discussed in detail in conjunction with FIG. **14**.

At block **1208**, a data packet is received at the switching device that needs to be forwarded to one of the firewall security devices in the cluster. The data packet may represent a request for accessing information from one or more computer systems, such as, one or more computer systems **114** form from an internal network, such as, network **112**. Various examples of the data packet type are IPv4, IPv6, non-IP and so forth. It will be apparent to the person ordinarily skilled in the art that the invention is not limited with respect to the type of data packet. Further, an exemplary IPv4 data packet is explained in an exemplary embodiment of the present invention, in conjunction with FIG. **3**.

Further, after the reception of the data packet, one or more bits from at least one of the source address and the destination address are extracted. For example if the administrator has configured hash bit value as Five and elected to perform load balancing based on the destination address, then Five bits from the destination address are extracted.

At block **1210**, the data packet is forwarded to one of the firewall security devices based on the extracted address, the load balancing function and load balancing table.

FIG. **13** is a flow diagram illustrating a method for configuring a switching device in accordance with an embodiment of the present invention.

At block **1304**, one or more control messages are sent to the one or more firewall security devices by a switching device. This is a very basic step to configure any newly mounted (installed) security device in load balancing mode. In response to the reception of such control messages the firewall security device synchronizes its operation with other firewall security devices in a cluster. In an embodiment of the present invention, multiple synchronization messages are exchanged between the firewall security device and other firewall security devices in a cluster.

Further, as discussed in conjunction with FIG. **2**, after synchronizing the operation with other cluster members, a VLAN device is created by the firewall security device that corresponds to a port on the switching device. In an embodiment of present the invention, two VLAN devices may be created by the firewall security device, which may represent a pair of ports on the switching device. After the creation of VLAN devices by the firewall security device, corresponding VLAN identifiers (IDs) are assigned to ports by the switching device.

At block **1306**, heartbeat signals are received from the firewall security device. As discussed in conjunction with FIG. **2**, the heartbeat signals consist of hello packets that are sent by the firewall security device at regular intervals to the switching device. These hello packets describe the state of the firewall security device and are also used by other cluster units to keep all cluster units synchronized.

After the successful configuration of the firewall security device, at block **1308**, the configured firewall security device is included in a load balancing table, such as the load balancing table **318**, as discussed in conjunction with FIG. **3** and FIG. **4**.

FIG. **14** is flow diagram illustrating a method for configuring a load balancing function in accordance with an embodiment of the present invention. Depending upon the particular implementation, the various process and decision blocks described below may be performed by hardware components, embodied in machine-executable instructions, which may be used to cause a general-purpose or special-purpose processor programmed with the instructions to perform the steps, or the steps may be performed by a combination of hardware, software, firmware and/or involvement of human participation/interaction.

At block **1404**, the number of bits to be hashed and/or the input size of the hash are configured by an administrator of the network. In an embodiment of the present invention, the number of bits to be hashed is five. In an embodiment of the present invention, various bits from the source address and/or the destination are also selected by the administrator for hashing. In another embodiment of the present invention, the administrator can also select at least one of a source address or destination address for hashing.

At block **1406**, one or more rules are configured by the administrator for generating one or more outcomes based on the selected hash bit value. In an embodiment the rule is

$$f(x)=D_N*2^N+D_{N-1}*2^{N-1}+\ldots+D_2*2^2+D_1*2^1+D_0*2^0;$$

Where N=value of hash bit.

It will be apparent to a person ordinarily skilled in the art that different types of rules may be configured by the administrator without deviating from the scope of the invention.

In an exemplary embodiment of the present invention, an initial five bits of the destination address (D_4, D_3, D_2, D_1, D_0) are selected by the administrator for the purpose of hashing. Thus, a maximum of 32 (thirty-two) outcomes can be obtained. Further, it will be apparent to a person ordinarily skilled in the art that any combination of bits can be selected by the administrator without limiting the scope of the invention.

At block **1408**, an action is assigned to each of the generated outcomes. In an embodiment of the present invention, the action specifies a port of the one or more ports for each outcome. Also, the load balancing table is updated after the allocation of ports for each of the outcomes. As discussed earlier, the load balancing table includes a mapping of the ports to corresponding address values of the received data packets.

FIG. **15** is a flow diagram illustrating a method for forwarding a data packet to a firewall security device in accordance with an embodiment of the present invention.

After the reception of a data packet by the switching device, at block **1504**, one or more bits from at least one of a source address and a destination address contained in the data packet are extracted. For example if the administrator has configured the hash bit value as five and elected to perform load balancing based on the destination address, then five bits from the destination address are extracted.

At block **1506**, a port on which a data packet is to be transmitted is determined. The determination is based on the value of an outcome calculated based on the configured rule and the load balancing table. Further, the load balancing table and the generation of the one or more outcomes based on the configured rule are explained in conjunction with FIG. **3**, FIG. **12**, and FIG. **14**.

At block **1508**, a VLAN tag is assigned to the data packet. In an embodiment of the present invention, the data packet, when received at the switching device, is already VLAN tagged. A second VLAN tag is assigned at the switching device.

At block **1510**, the data packet is directed to the port determined at step **1506** based on the address contained in the data packet and the load balancing table.

FIG. **16** is a flow diagram illustrating a method for balancing load among one or more firewall security devices in accordance with an embodiment of the present invention.

Blocks **1604**, **1606**, and **1608** illustrate the steps of configuring a switching device, such as switching device **106**, with one or more firewall security devices, such as one or more firewall security devices **208**.

At block **1604**, one or more control messages are sent to the one or more firewall security devices by a switching device. In response to the reception of such control messages the firewall security device synchronizes its operation with other firewall security devices in a cluster. In an embodiment of the present invention, multiple synchronization messages are exchanged between the firewall security device and other firewall security devices in a cluster.

At block **1606**, heartbeat signals are received from the firewall security device. As discussed in conjunction with FIG. **2** and FIG. **13**, the heartbeat signals consists of hello packets that are sent by the firewall security device at regular intervals to the switching device. These hello packets describe the state of the firewall security device and are also used by other cluster units to keep all cluster units synchronized.

After the successful configuration of the firewall security device, at block **1608**, the configured firewall security device is included in a load balancing table, such as the load balancing table **318**, as discussed in conjunction with FIG. **3** and FIG. **4**.

At block **1610**, a load balancing function is configured in order to distribute the data packets among the one or more ports. As a result of the configuration of the load balancing function, the load balancing table is updated. Further, the configuration of the load balancing function has been discussed in detail in conjunction with FIG. **14**.

At block **1612**, a data packet is received at the switching device that needs to be forwarded to one of the firewall security device in the cluster. The data packet may represent a request for accessing information from one or more computer systems, such as, one or more computer systems **114** form an internal network, such as, network **112** Various examples of the data packet type are IPv4, IPv6, non-IP and so forth. It will be apparent to the person ordinarily skilled in the art that the invention is not limited with respect to the type of data packet. Further, an exemplary IPv4 data packet is explained in an exemplary embodiment of the present invention, in conjunction with FIG. **3**.

Further, after the reception of the data packet, one or more bits from at least one of the source address and the destination address are extracted. For example if the administrator has configured hash bit value as Five and elected to perform load balancing based on the destination address, then Five bits from the destination address are extracted. Notably, the bits need not be adjacent or consecutive. Further, it will be apparent to a person ordinarily skilled in the art that any combination of bits can be selected by the administrator without limiting the scope of the invention and without deviating from the scope of the invention.

At block **1614**, the data packet is forwarded to one of the firewall security devices based on the extracted address, the load balancing function and load balancing table.

Methods and systems, according to various embodiments of the present invention, provide high availability (HA) clusters of firewall security devices for load balancing in a network. An HA cluster provides enhanced reliability and increased performance, the two key requirements of critical enterprise networking Load balancing in HA is implemented by configuring a plurality of firewall security devices in HA cluster. In the network, HA clusters process network traffic and provide normal security services such as firewalling, virtual private network (VPN), virus scanning, web filtering, and spam filtering services.

In an embodiment of the present invention, the switching device implements direct control of spanning-tree state of interfaces as a rapid HA mechanism. For example, depending upon the characteristics of the particular switch, the spanning-tree protocol (STP) hardware built into the switch may be used as a means of blocking ports as the STP block is a very low level disabling of traffic forwarding on the port, but does not affect the physical behavior of the link. Those of ordinary skill in the art will appreciate other port blocking approaches may be utilized.

According to an embodiment of the present invention, if a firewall security device in a cluster fails, the other firewall security device in the cluster automatically takes over the work that the failed firewall security was performing. Thus, the cluster continues to process network traffic and provide normal security services with virtually no interruption. Further, according to various embodiments of the present invention, methods and systems for load balancing among the plurality of firewall security devices is capable of achieving

extreme levels of session-based performance. Furthermore, the various embodiments of the present invention offer the advantage of geographically distributed load-balancing, since the invention can be used to overcome a number of firewall deployment limitations, including handling asynchronous traffic.

While embodiments of the present invention have been illustrated and described, it will be clear that the invention is not limited to these embodiments only. Numerous modifications, changes, variations, substitutions, and equivalents will be apparent to those skilled in the art, without departing from the spirit and scope of the invention, as described in the claims.

What is claimed is:

1. A method for balancing load among firewall security devices in a network, the method comprising:

causing, by a switching device on the network, a plurality of firewall security devices arranged in one or more clusters on the network to enter into a load balancing mode by sending one or more control messages to the plurality of firewall security devices;

receiving, by the switching device, heartbeat signals from the plurality of firewall security devices;

including, by the switching device, information regarding the plurality of firewall security devices into a load balancing table;

configuring a load balancing function in the switching device based on information received from a network administrator indicative of (i) a number of bits to be used as an input to the load balancing function and (ii) bit positions of the number of bits within one or more of a packet type, a source port, a destination port, a source address and a destination address of packets to be load balanced, wherein the number of bits may be fewer than that of the source address or the destination address, wherein the bit positions are not limited to being contiguous and wherein the load balancing function enables the switching device to manage more than eight firewall security devices in a cluster;

receiving, by the switching device, a data packet from one or more client devices; and

forwarding, by the switching device, the data packet to a firewall security device of the plurality of firewall security devices based on the load balancing function.

2. The method of claim **1**, wherein the load balancing function comprises a hash function or an emulated hash function.

3. The method of claim **1**, further comprising configuring one or more rules to generate one or more outcomes, wherein the one or more outcomes are generated based on the number of bits.

4. The method of claim **3**, further comprising specifying one or more ports corresponding to the one or more outcomes on the switching device.

5. The method of claim **4**, further comprising directing the data packet to one of the one or more ports based on (i) an outcome of applying the hash function to the bit positions and (ii) the load balancing table.

6. The method of claim **1**, further comprising assigning a Virtual Local Area Network (VLAN) tag to the data packet.

7. A non-transitory computer-readable storage medium readable by one or more processors of a switching device, the computer-readable storage medium tangibly embodying a set of instructions executable by the one or more processors to perform a method for balancing load among firewall security devices, the method comprising:

directing a plurality of firewall security devices arranged in one or more clusters on a network to enter into a load balancing mode by sending one or more control messages to the plurality of firewall security devices;

receiving heartbeat signals from the plurality of firewall security devices;

including information regarding the plurality of firewall security devices into a load balancing table;

configuring a load balancing function in the switching device based on information received from a network administrator indicative of (i) a number of bits to be used as an input to the load balancing function and (ii) bit positions of the number of bits within one or more of a packet type, a source port, a destination port, a source address and a destination address of packets to be load balanced, wherein the number of bits may be fewer than that of the source address or the destination address, wherein the bit positions are not limited to being contiguous and wherein the load balancing function enables the switching device to manage more than eight firewall security devices in a cluster;

receiving a data packet from one or more client devices; and

forwarding the data packet to a firewall security device of the plurality of firewall security devices based on the load balancing function.

8. The non-transitory computer-readable storage medium of claim **7**, wherein the load balancing function comprises a hash function or an emulated hash function.

9. The non-transitory computer-readable storage medium of claim **7**, wherein the method further comprises configuring one or more rules to generate one or more outcomes, wherein the one or more outcomes are generated based on the number of bits.

10. The non-transitory computer-readable storage medium of claim **9**, wherein the method further comprises specifying one or more ports corresponding to the one or more outcomes on the switching device.

11. The non-transitory computer-readable storage medium of claim **10**, wherein the method further comprises directing the data packet to one of the one or more ports based on (i) an outcome of applying the hash function to the bit positions and (ii) the load balancing table.

12. The non-transitory computer-readable storage medium of claim **7**, wherein the method further comprises assigning a Virtual Local Area Network (VLAN) tag to the data packet.

* * * * *