US009119439B2

(12) **United States Patent**
Brandt et al.

(10) **Patent No.: US 9,119,439 B2**
(45) **Date of Patent: Sep. 1, 2015**

(54) **FLUID-FILLED STRUCTURE**

(75) Inventors: **Christopher W. Brandt**, Portland, OR (US); **Jonathan A. Eckart**, Portland, OR (US); **Danielle L. Taylor**, Portland, OR (US)

(73) Assignee: **NIKE, Inc.**, Beaverton, OR (US)

(*) Notice: Subject to any disclaimer, the term of this patent is extended or adjusted under 35 U.S.C. 154(b) by 803 days.

(21) Appl. No.: **12/630,695**

(22) Filed: **Dec. 3, 2009**

(65) **Prior Publication Data**

US 2011/0131832 A1 Jun. 9, 2011

(51) **Int. Cl.**

B29C 65/00	(2006.01)
B29C 51/26	(2006.01)
B29C 51/10	(2006.01)
B29D 35/12	(2010.01)
A43B 13/20	(2006.01)

(52) **U.S. Cl.**

CPC ***A43B 13/20*** (2013.01); ***A43B 13/206*** (2013.01); ***B29C 51/105*** (2013.01); ***B29C 51/267*** (2013.01); ***B29C 66/438*** (2013.01); ***B29D 35/122*** (2013.01)

(58) **Field of Classification Search**

CPC A43B 13/189; A43B 13/20; A43B 13/206; A43B 17/03; B29C 66/438; B29C 66/439; B29C 51/267; B29C 51/105; B29C 2049/0057

USPC 156/145, 146, 147, 156; 36/29; 264/544, 545

See application file for complete search history.

(56) **References Cited**

U.S. PATENT DOCUMENTS

2,703,770	A		3/1955	Melzer
2,991,500	A	*	7/1961	Hagen 156/145
3,030,640	A		4/1962	Gosman
3,608,215	A		9/1971	Fukuoka
3,685,176	A		8/1972	Rudy
3,758,964	A		9/1973	Nishimura
4,183,156	A		1/1980	Rudy
4,187,620	A		2/1980	Selner

(Continued)

FOREIGN PATENT DOCUMENTS

CN	1285268	2/2001
CN	1291263	4/2001

(Continued)

OTHER PUBLICATIONS

Machine translation of French Patent Publication No. FR-1424147A, originally published Jan. 1966, 9 pages.*

(Continued)

Primary Examiner — William Bell

(74) *Attorney, Agent, or Firm* — Honigman Miller Schwartz and Cohn LLP; Matthew H. Szalach; Jonathan P. O'Brien

(57) **ABSTRACT**

A fluid-filled chamber may include a pair of polymer layers that define a plurality of subchambers and a web area. The subchambers are protruding portions of the polymer layers that enclose a fluid, and the web area is portions of the polymer layers that are located between the subchambers and lay adjacent to each other. The subchambers may have greater thickness than the web area. A perimeter bond joining the polymer layers and extends around a periphery of the chamber. In addition, a plurality of interior bonds join the polymer layers and extending around the subchambers, which may seal the fluid within the subchambers.

19 Claims, 28 Drawing Sheets

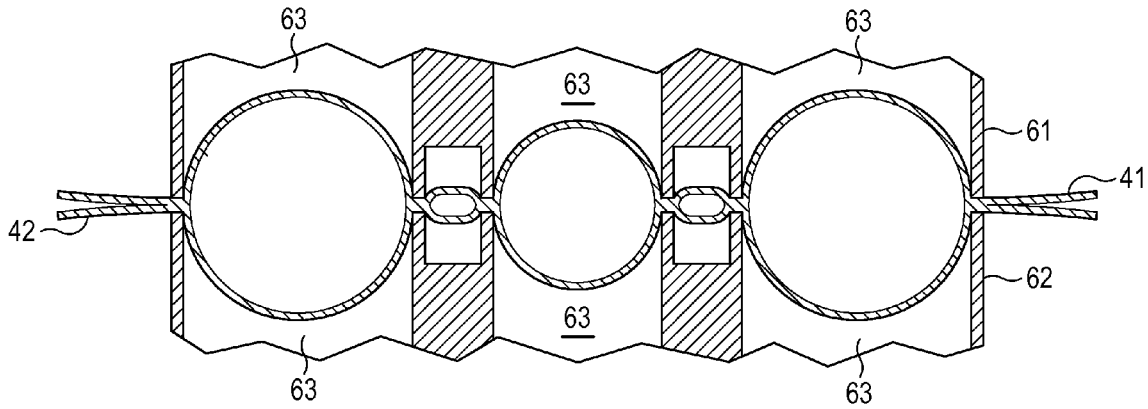

(56) **References Cited**

U.S. PATENT DOCUMENTS

4,217,705	A	8/1980	Donzis	
4,219,945	A	9/1980	Rudy	
4,340,626	A	7/1982	Rudy	
4,358,902	A	11/1982	Cole et al.	
4,506,460	A	3/1985	Rudy	
4,547,919	A	10/1985	Wang	
4,698,864	A	10/1987	Graebe	
4,722,131	A	2/1988	Huang	
4,782,602	A	11/1988	Lakic	
4,803,029	A	2/1989	Iversen et al.	
4,817,304	A	4/1989	Parker et al.	
4,823,482	A	4/1989	Lakic	
4,829,682	A	5/1989	Gasbarro	
4,845,861	A	7/1989	Moumdjian	
4,874,640	A	10/1989	Donzis	
4,891,855	A	1/1990	Cheng-Chung	
4,906,502	A	3/1990	Rudy	
4,912,861	A	4/1990	Huang	
4,936,029	A	6/1990	Rudy	
4,991,317	A	2/1991	Lakic	
4,999,931	A	3/1991	Vermeulen	
5,022,109	A	6/1991	Pekar	
5,025,575	A	6/1991	Lakic	
5,042,176	A	8/1991	Rudy	
5,044,030	A	9/1991	Balaton	
5,158,767	A	10/1992	Cohen et al.	
5,179,792	A	1/1993	Brantingham	
5,193,246	A	3/1993	Huang	
5,199,191	A	4/1993	Moumdjian	
5,224,277	A	7/1993	Sang Do	
5,224,278	A	7/1993	Jeon	
5,228,156	A	7/1993	Wang	
5,235,715	A	8/1993	Donzis	
5,245,766	A	9/1993	Warren	
5,253,435	A	10/1993	Auger et al.	
5,257,470	A	11/1993	Auger et al.	
5,335,382	A	8/1994	Huang	
5,337,492	A	8/1994	Anderie et al.	
5,353,459	A	10/1994	Potter et al.	
5,363,570	A *	11/1994	Allen et al.	36/28
5,367,791	A	11/1994	Gross et al.	
5,406,719	A	4/1995	Potter	
5,493,792	A	2/1996	Bates et al.	
5,572,804	A	11/1996	Skaja et al.	
5,592,706	A	1/1997	Pearce	
5,595,004	A	1/1997	Lyden et al.	
5,669,161	A	9/1997	Huang	
5,686,167	A	11/1997	Rudy	
5,704,137	A	1/1998	Dean et al.	
5,713,141	A	2/1998	Mitchell et al.	
5,741,568	A	4/1998	Rudy	
5,753,061	A *	5/1998	Rudy	156/147
5,771,606	A	6/1998	Litchfield et al.	
5,832,630	A	11/1998	Potter	
5,846,063	A	12/1998	Lakic	
5,907,911	A	6/1999	Huang	
5,916,664	A	6/1999	Rudy	
5,925,306	A	7/1999	Huang	
5,952,065	A	9/1999	Mitchell et al.	
5,976,451	A	11/1999	Skaja et al.	
5,979,078	A	11/1999	McLaughlin	
5,993,585	A	11/1999	Goodwin et al.	
6,009,637	A	1/2000	Pavone	
6,013,340	A	1/2000	Bonk et al.	
6,027,683	A	2/2000	Huang	
6,029,962	A	2/2000	Shorten et al.	
6,065,150	A	5/2000	Huang	
6,082,025	A	7/2000	Bonk et al.	
6,098,313	A	8/2000	Skaja	
6,127,010	A	10/2000	Rudy	
6,127,026	A	10/2000	Bonk et al.	
6,128,837	A	10/2000	Huang	
6,192,606	B1	2/2001	Pavone	
6,203,868	B1	3/2001	Bonk et al.	
6,253,466	B1	7/2001	Harmon-Weiss et al.	
6,258,421	B1 *	7/2001	Potter	428/35.2
6,321,465	B1	11/2001	Bonk et al.	
6,374,514	B1	4/2002	Swigart	
6,385,864	B1	5/2002	Sell, Jr. et al.	
6,402,879	B1	6/2002	Tawney et al.	
6,430,843	B1	8/2002	Potter et al.	
6,457,262	B1	10/2002	Swigart	
6,463,612	B1	10/2002	Potter	
6,550,085	B2	4/2003	Roux	
6,571,490	B2	6/2003	Scarfe et al.	
6,665,958	B2	12/2003	Goodwin	
6,783,184	B2	8/2004	DiBattista et al.	
6,796,056	B2	9/2004	Swigart	
6,837,951	B2	1/2005	Rapaport	
6,892,477	B2	5/2005	Potter et al.	
6,918,198	B2	7/2005	Chi	
6,931,764	B2	8/2005	Swigart et al.	
6,971,193	B1	12/2005	Potter et al.	
7,000,335	B2	2/2006	Swigart et al.	
7,051,456	B2	5/2006	Swigart et al.	
7,070,845	B2	7/2006	Thomas et al.	
7,076,891	B2	7/2006	Goodwin	
7,086,179	B2	8/2006	Dojan et al.	
7,128,796	B2	10/2006	Hensley et al.	
7,131,218	B2	11/2006	Schindler	
7,141,131	B2	11/2006	Foxen et al.	
7,200,957	B2	4/2007	Hubbard et al.	
7,244,483	B2	7/2007	Tawney et al.	
2005/0132607	A1	6/2005	Dojan et al.	
2009/0151195	A1 *	6/2009	Forstrom et al.	36/29

FOREIGN PATENT DOCUMENTS

FR	1424147	A *	1/1966
WO	9922160		5/1999
WO	WO 2005046379	A1 *	5/2005

OTHER PUBLICATIONS

International Search Report and Written Opinion mailed May 25, 2011 in International Application No. PCT/US2010/055942.

First Office Action Issued Feb. 27, 2014 in Chinese Patent Application No. 201080054023.0, and English translation thereof.

Notice of Allowance dated Jul. 31, 2014 in Chinese Patent Application No. 201080054023.0.

European Patent Office, Communication pursuant to Article 94(3) EPC for Application No. 10798649.9, mailed Feb. 12, 2015.

* cited by examiner

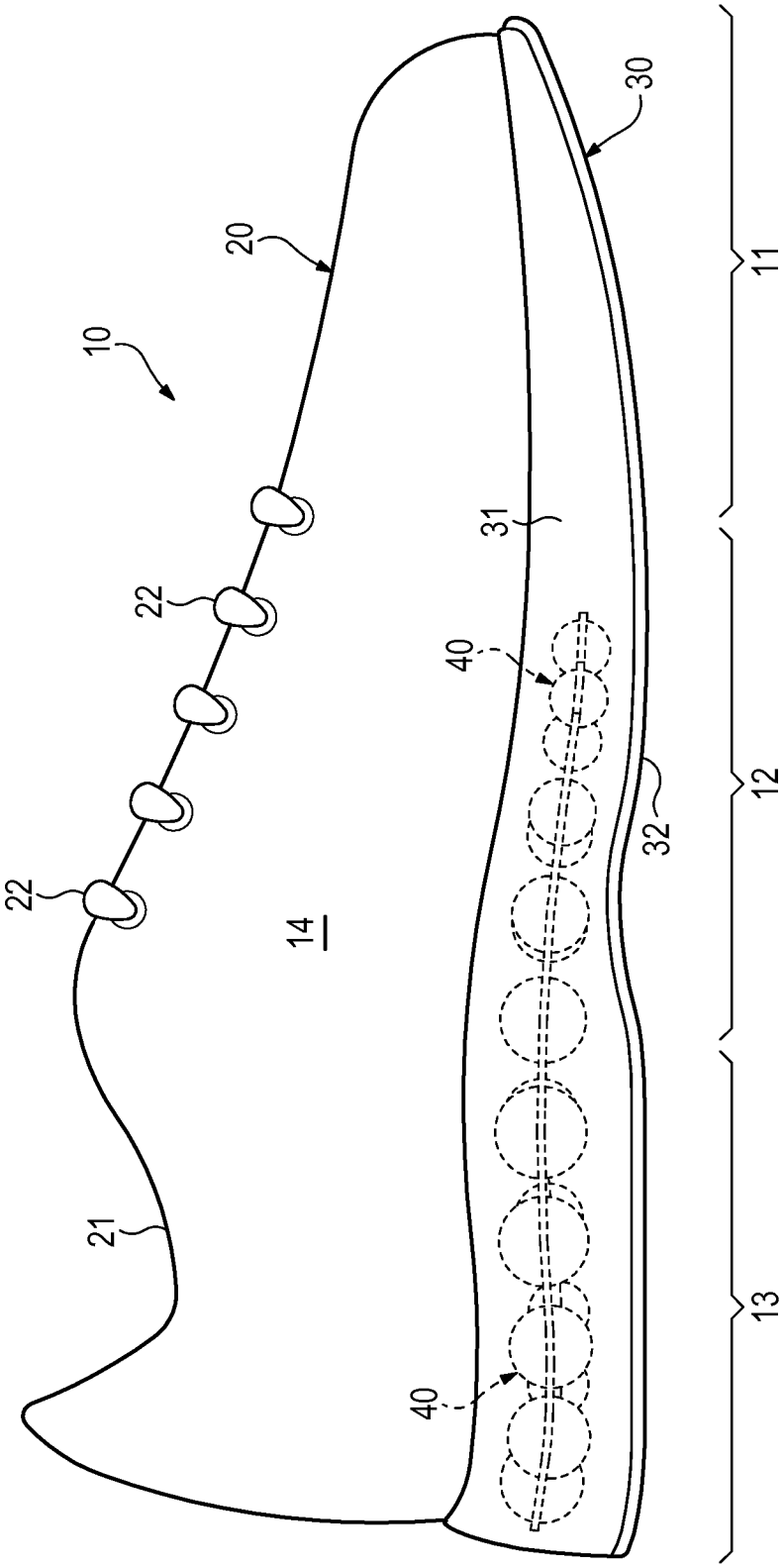

Figure 1

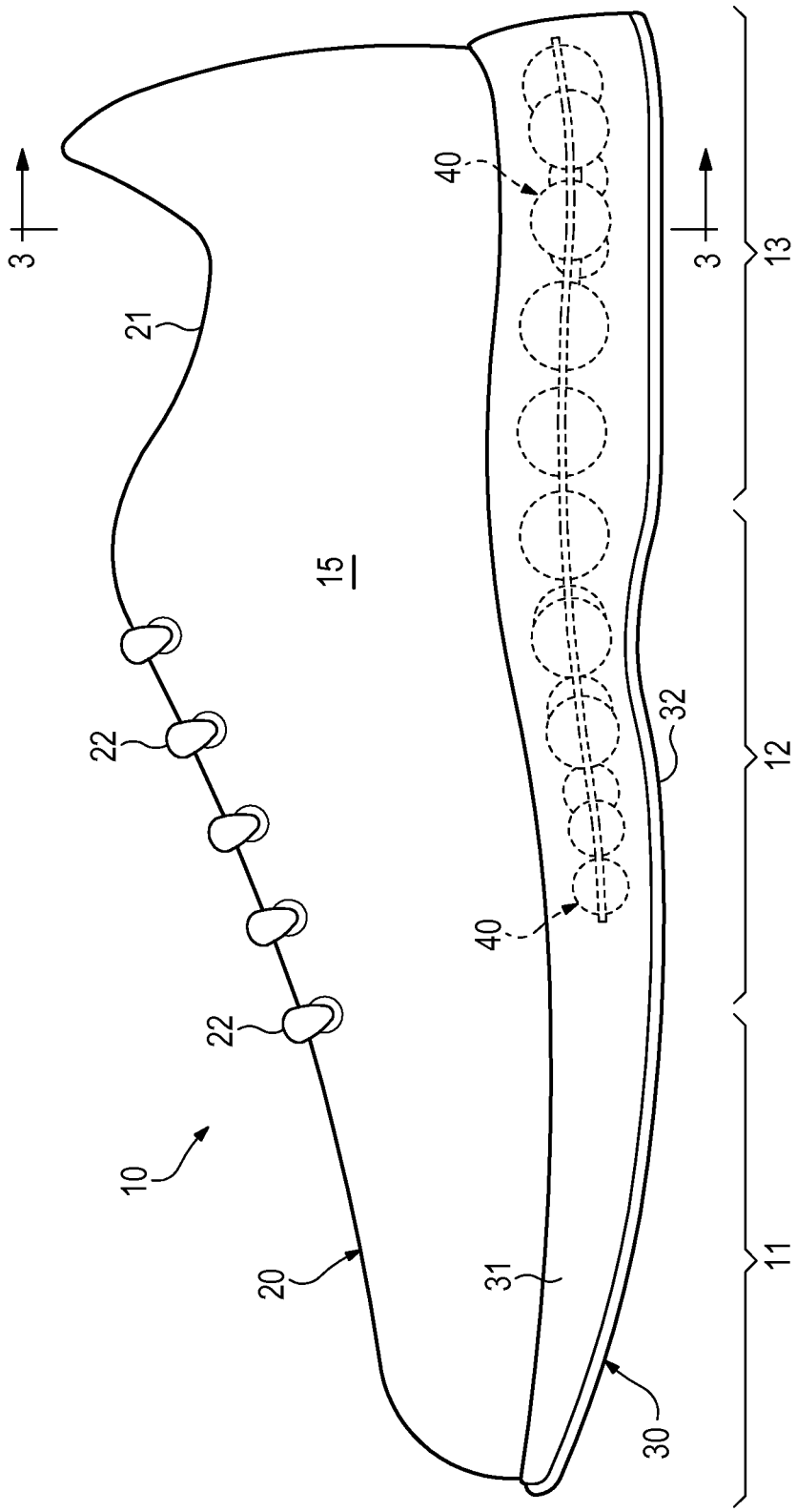

Figure 2

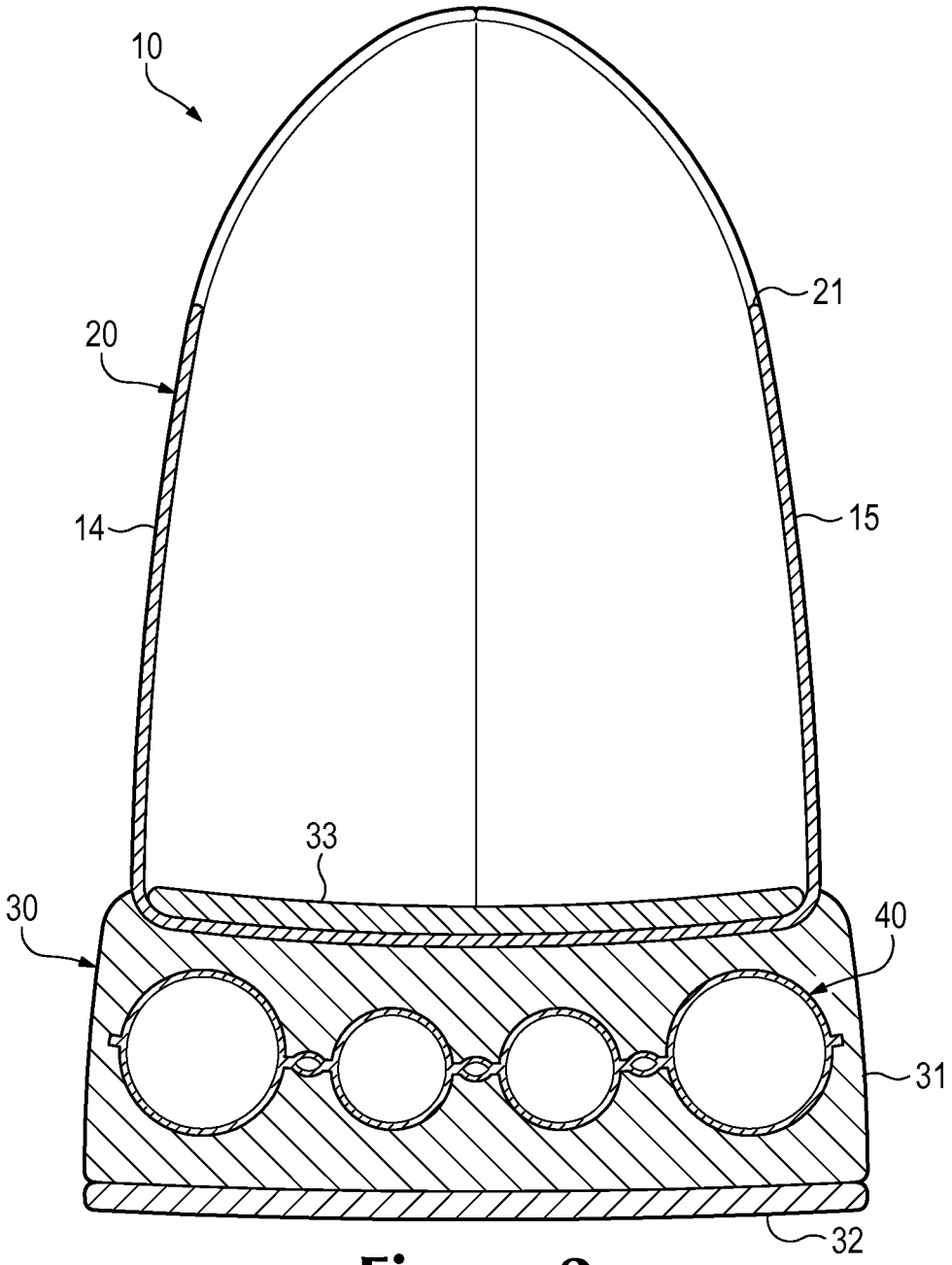

Figure 3

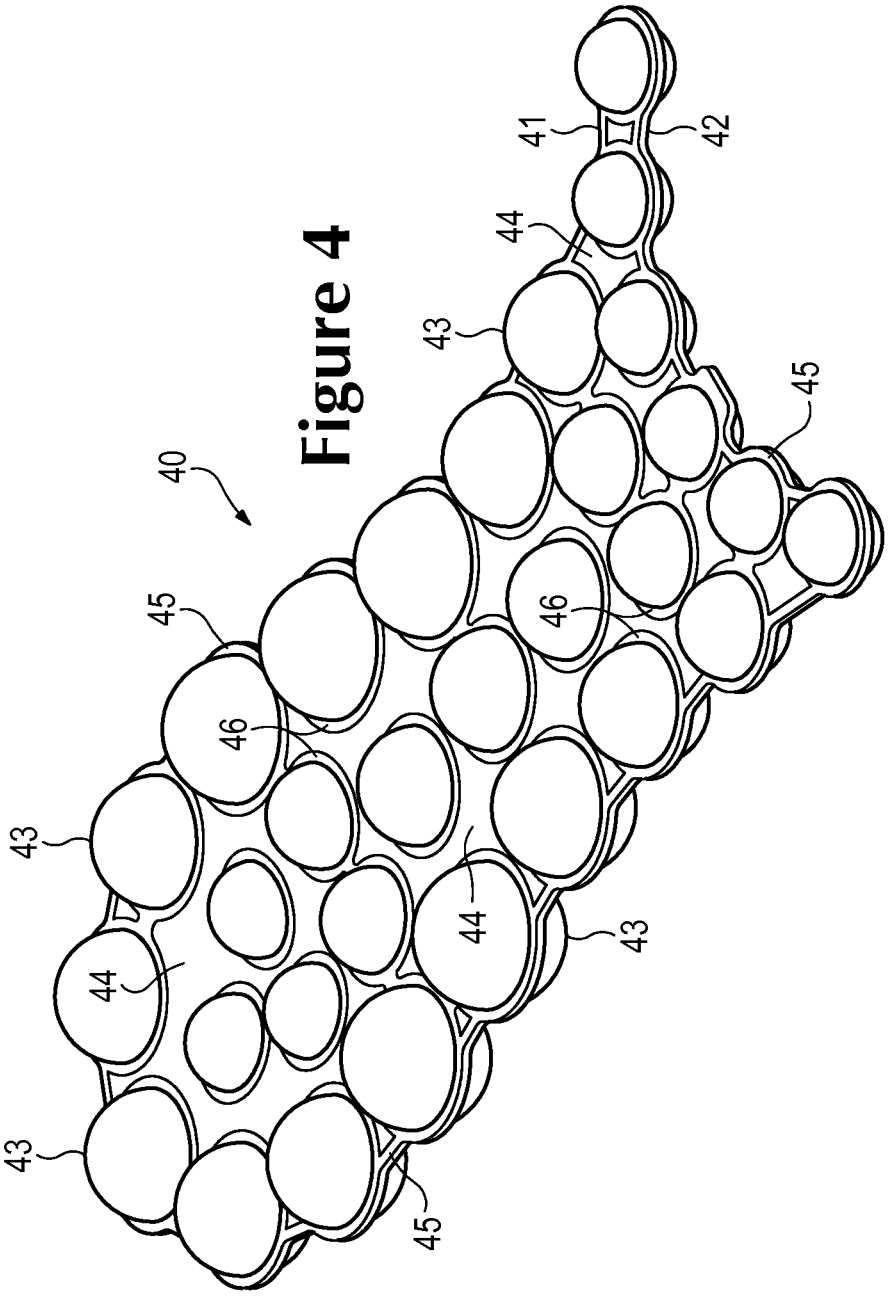

Figure 4

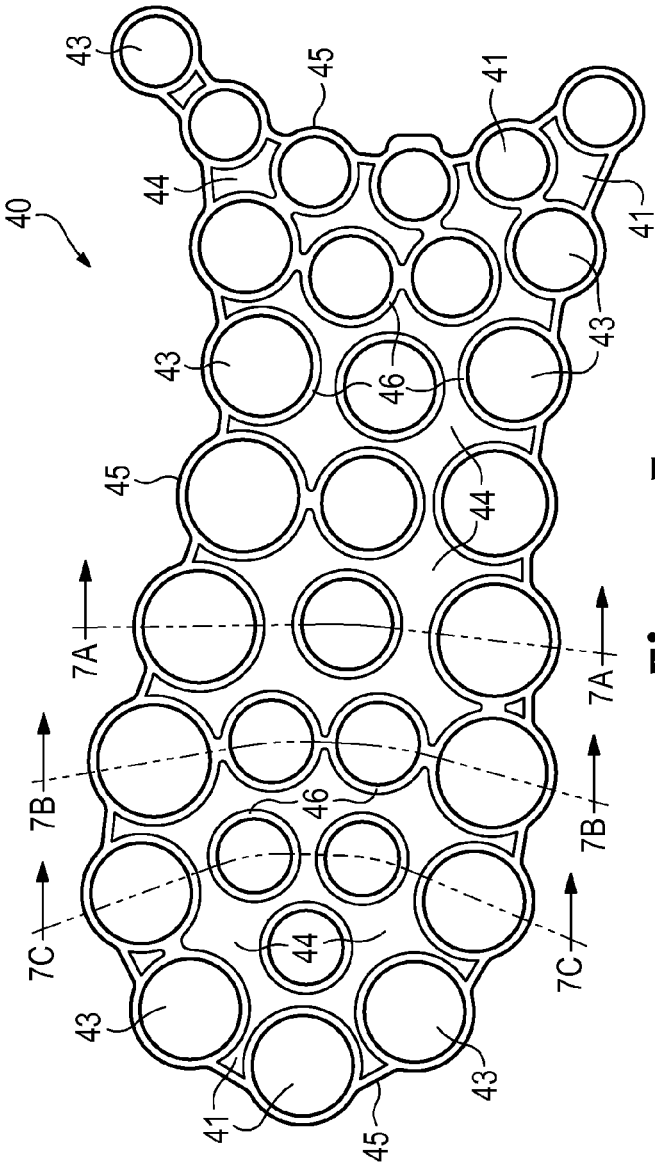

Figure 5

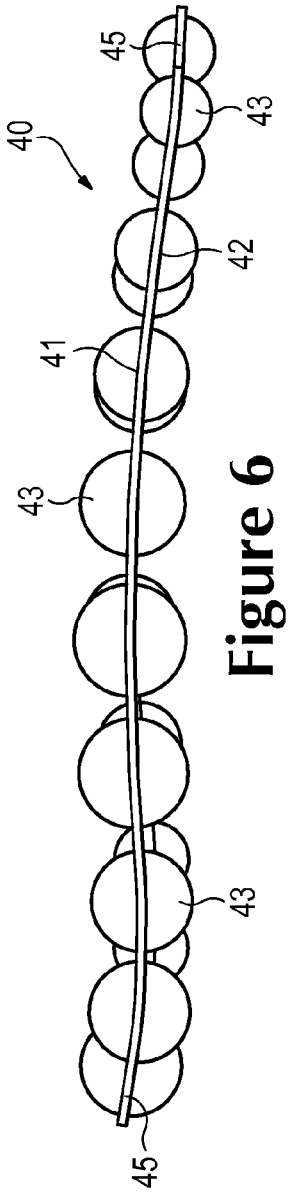

Figure 6

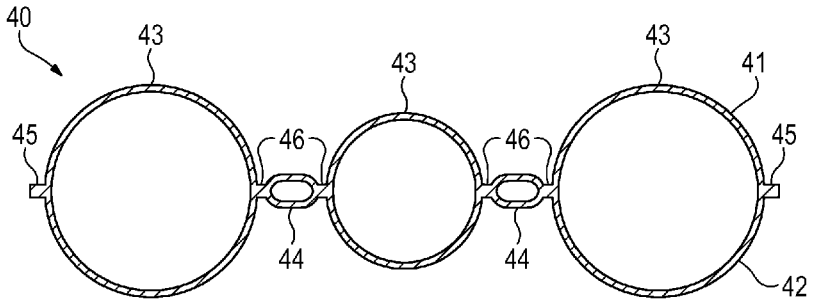

Figure 7A

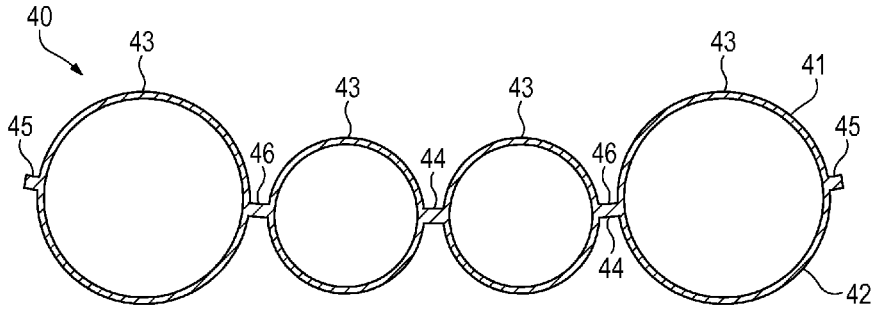

Figure 7B

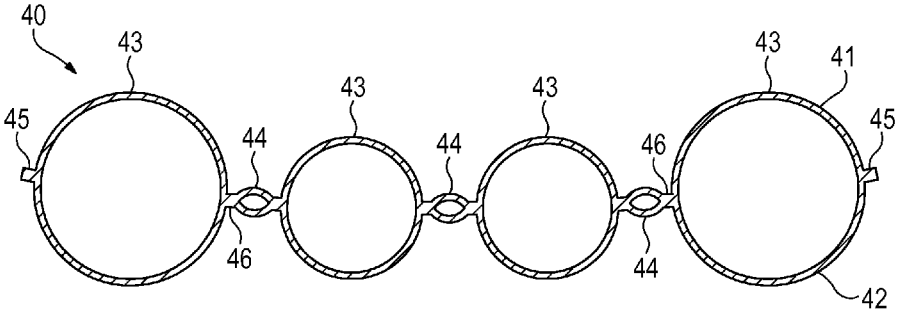

Figure 7C

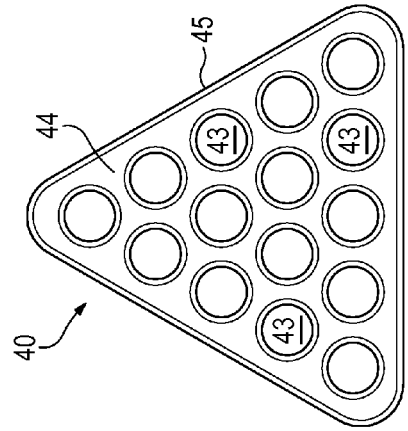

Figure 8B

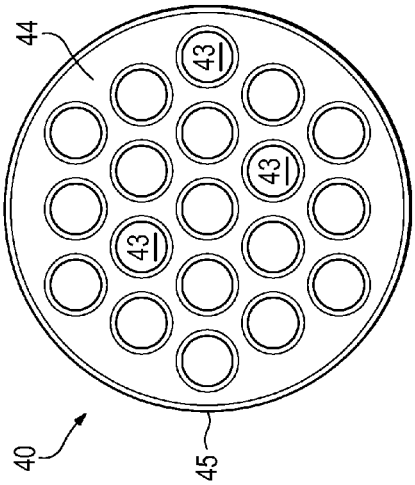

Figure 8A

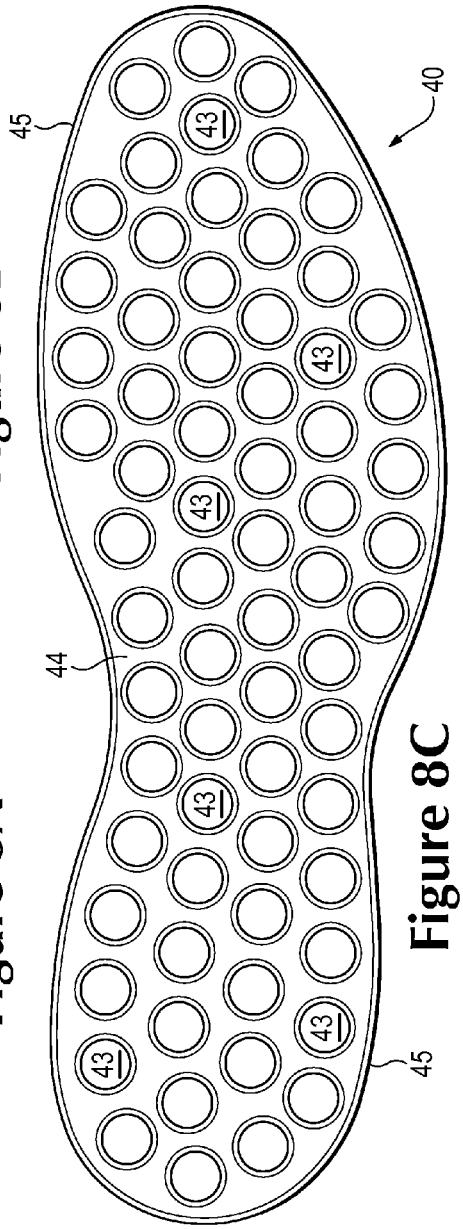

Figure 8C

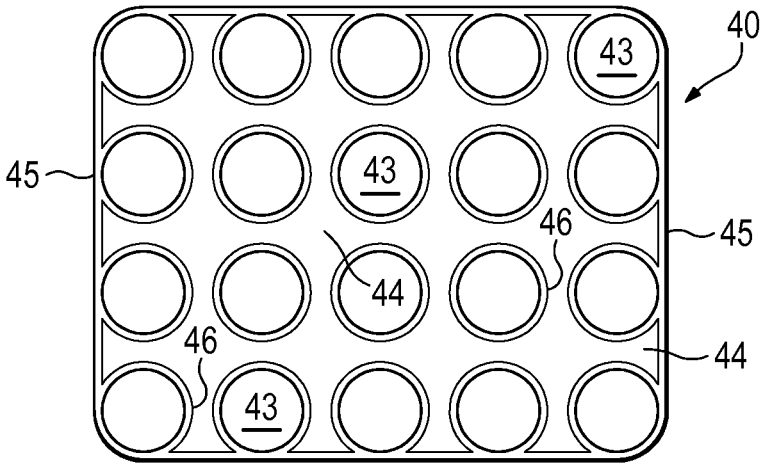

Figure 8D

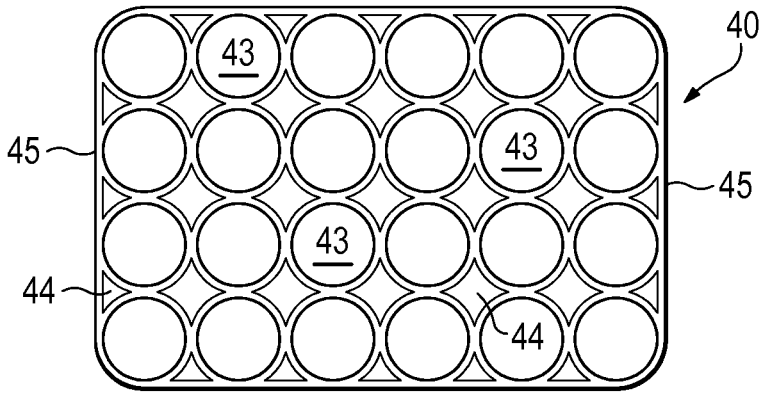

Figure 8E

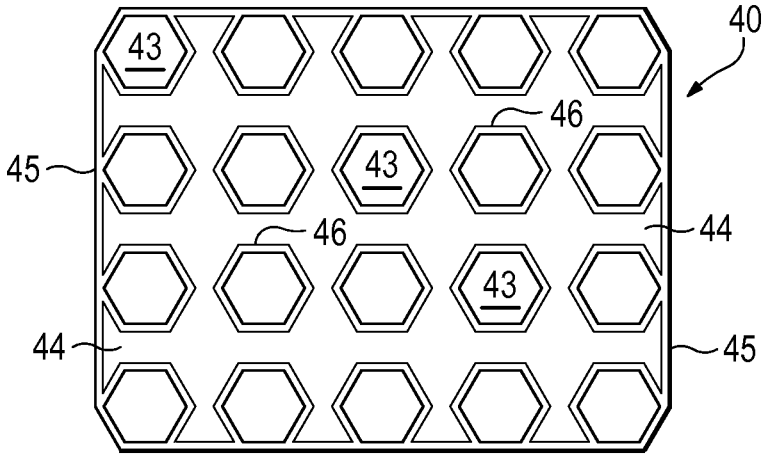

Figure 8F

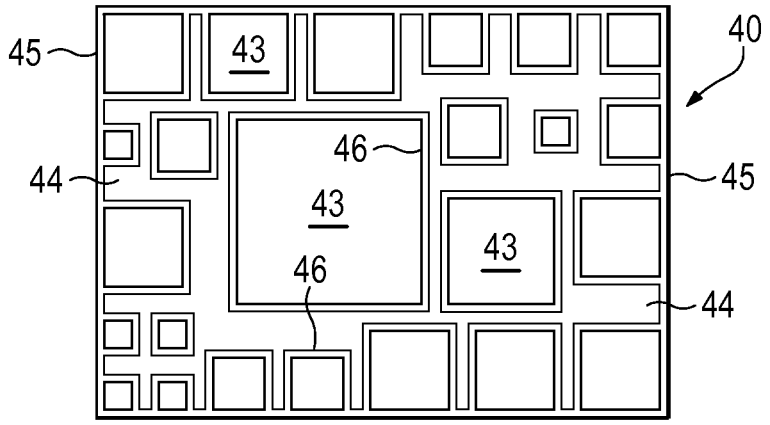

Figure 8G

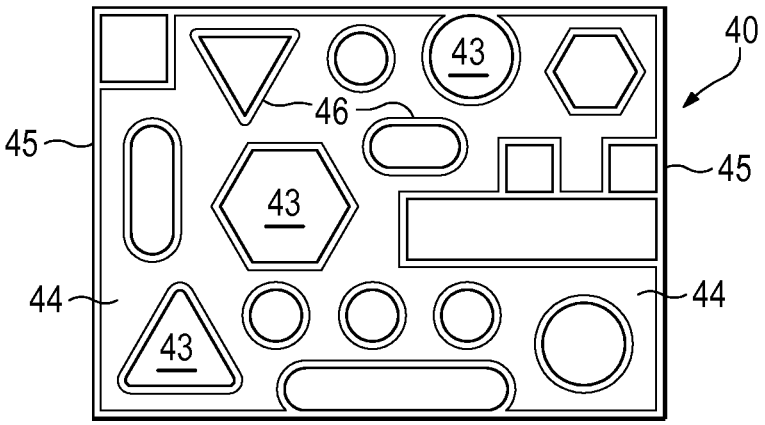

Figure 8H

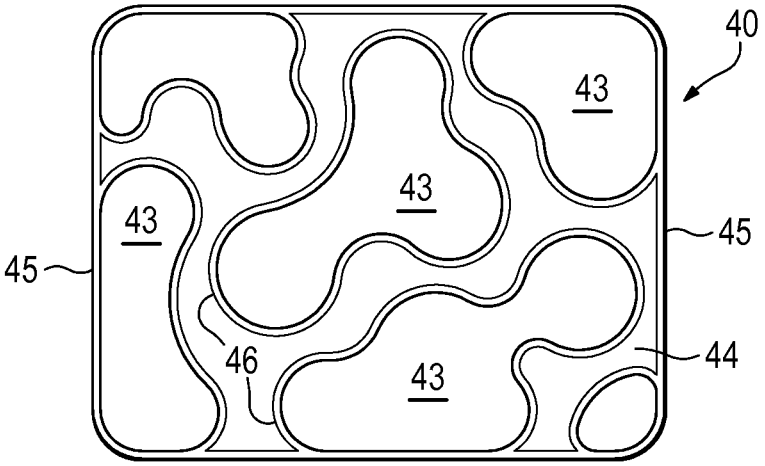

Figure 8I

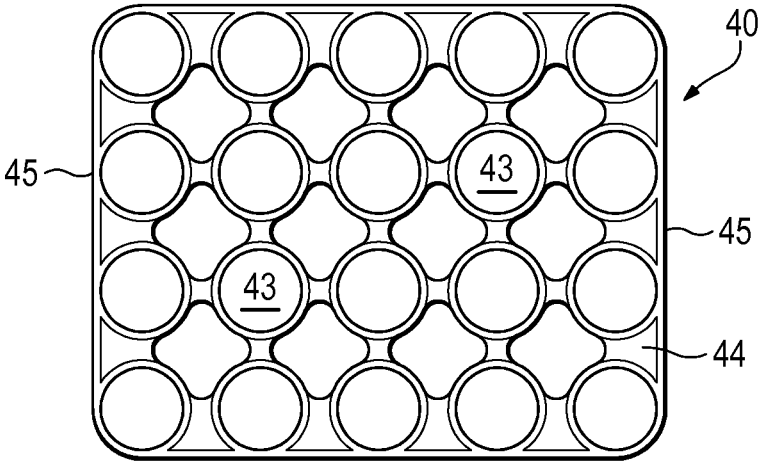

Figure 8J

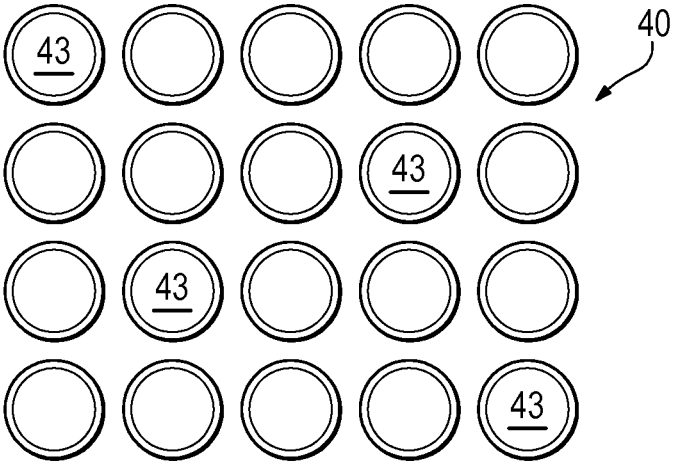

Figure 8K

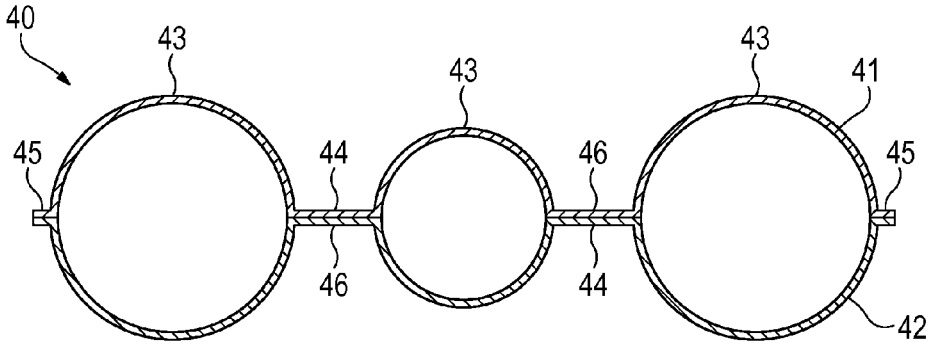

Figure 9A

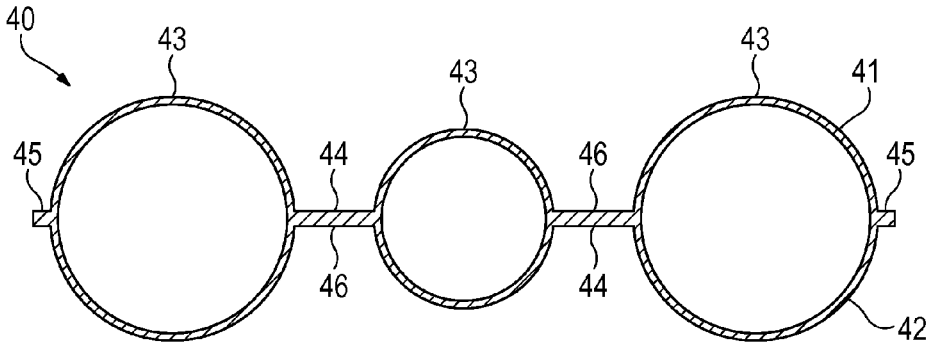

Figure 9B

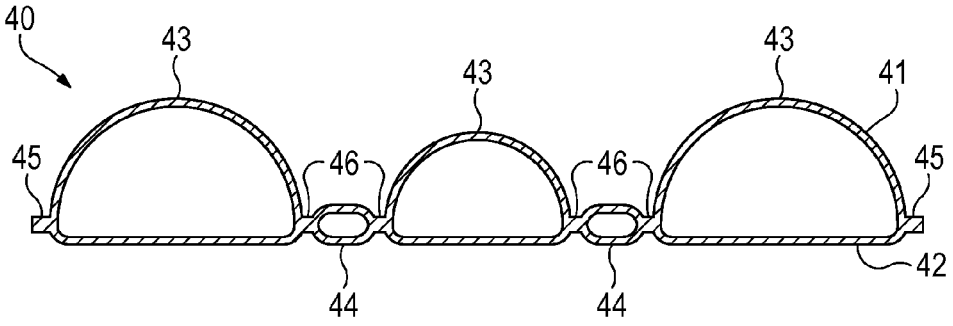

Figure 9C

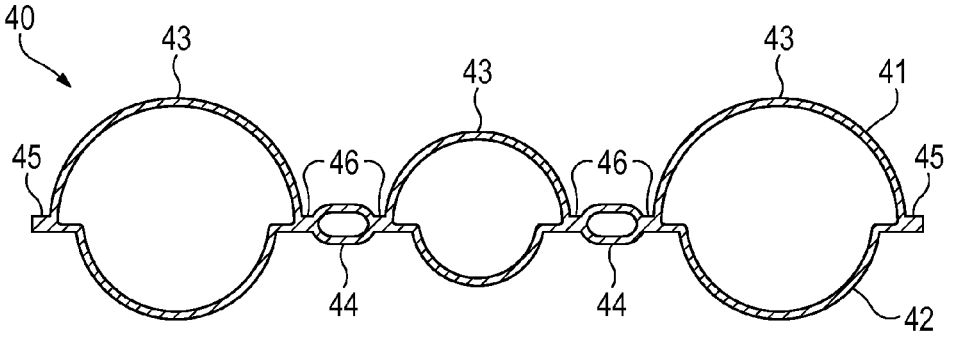

Figure 9D

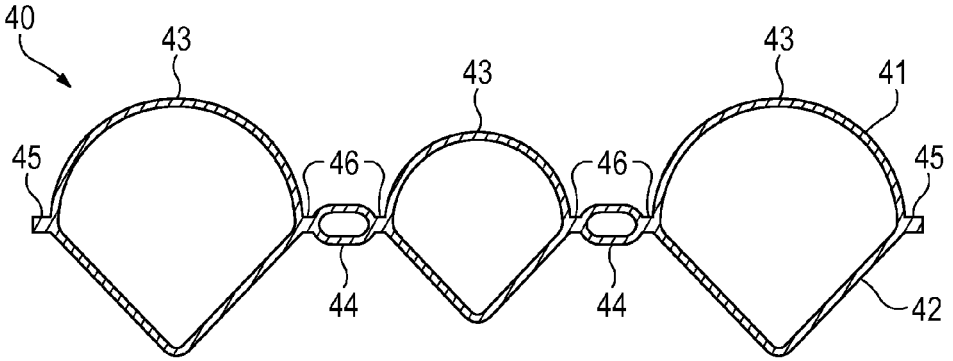

Figure 9E

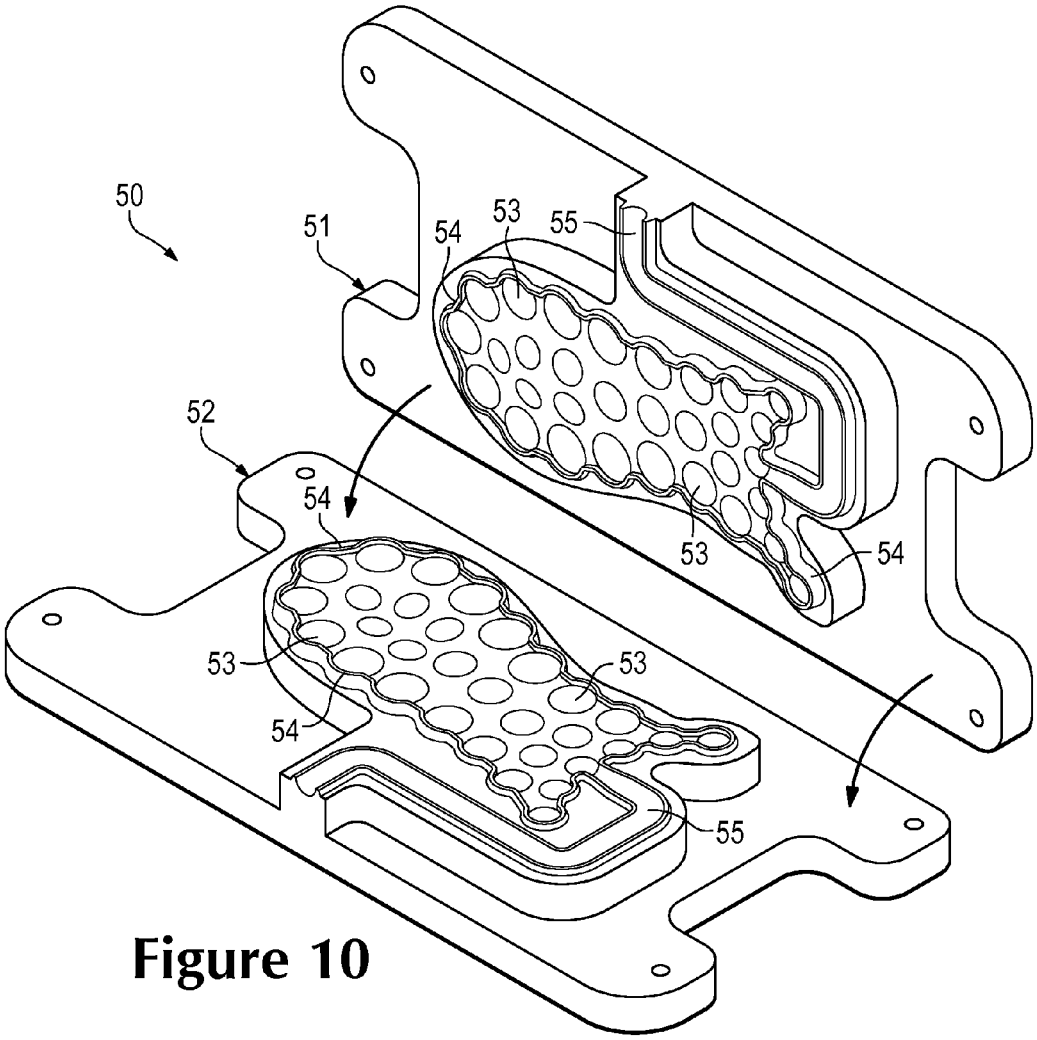

Figure 10

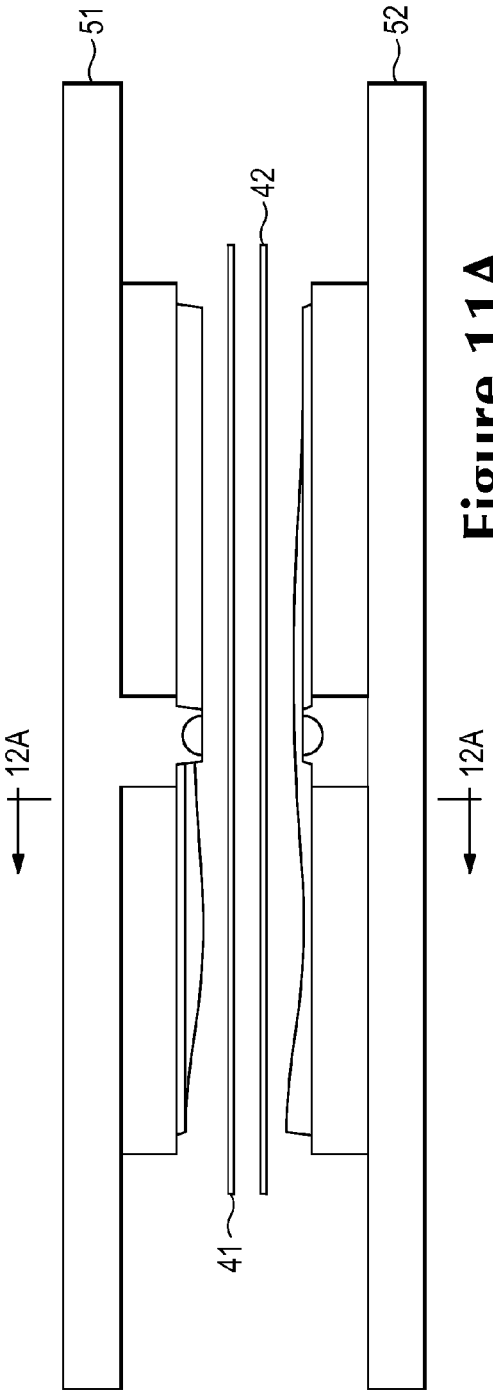

Figure 11A

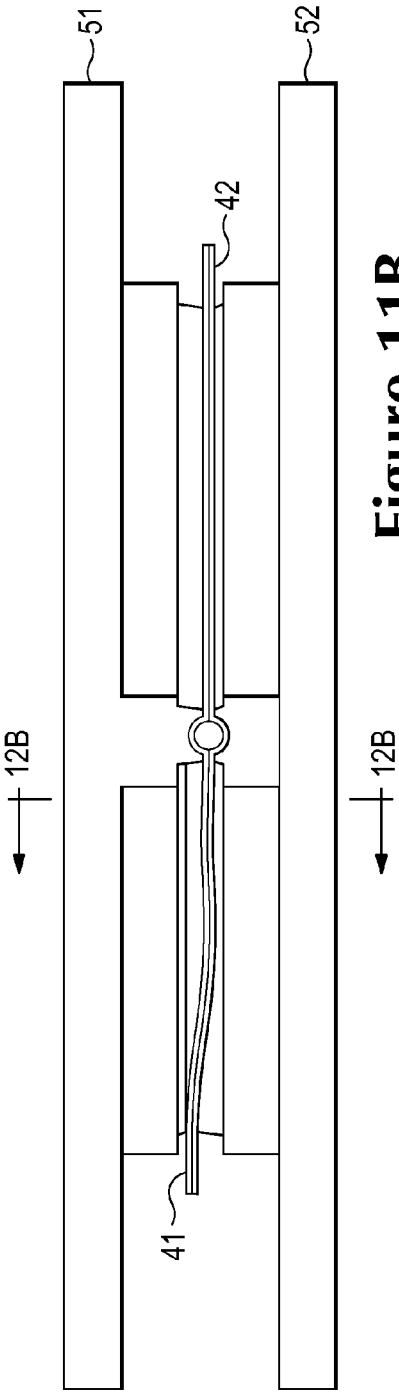

Figure 11B

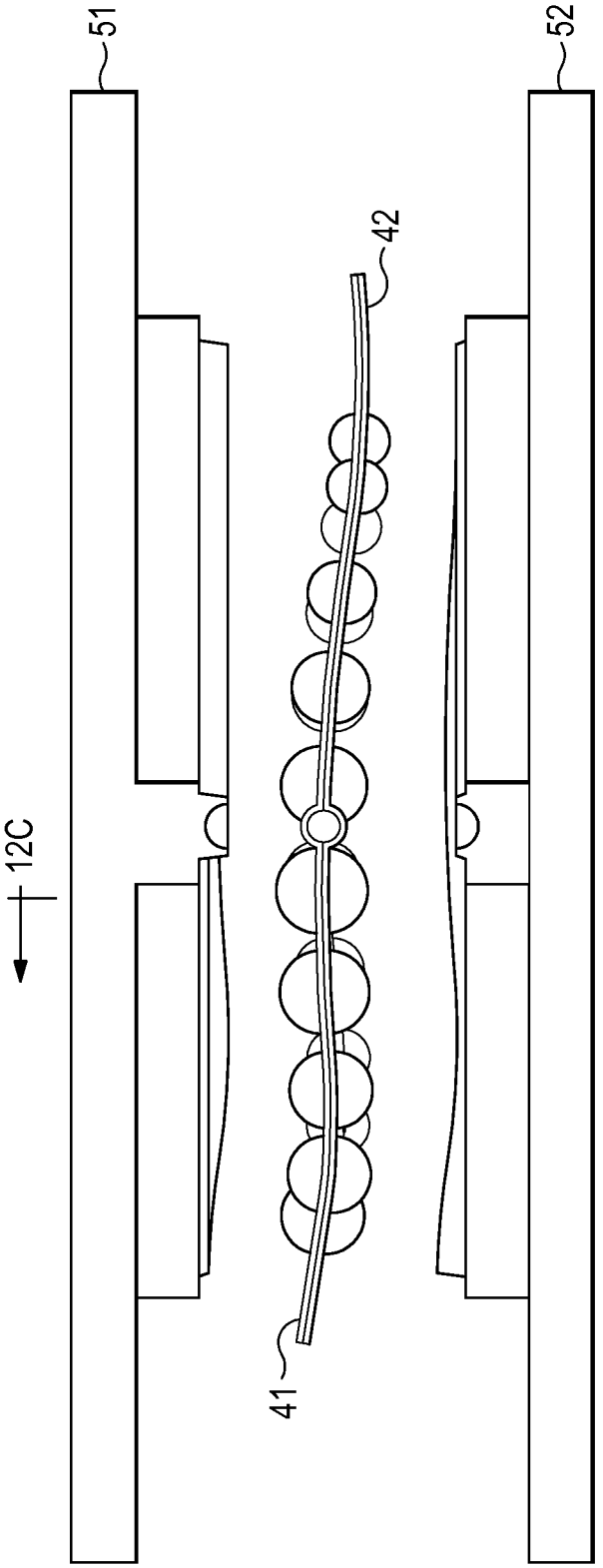

Figure 11C

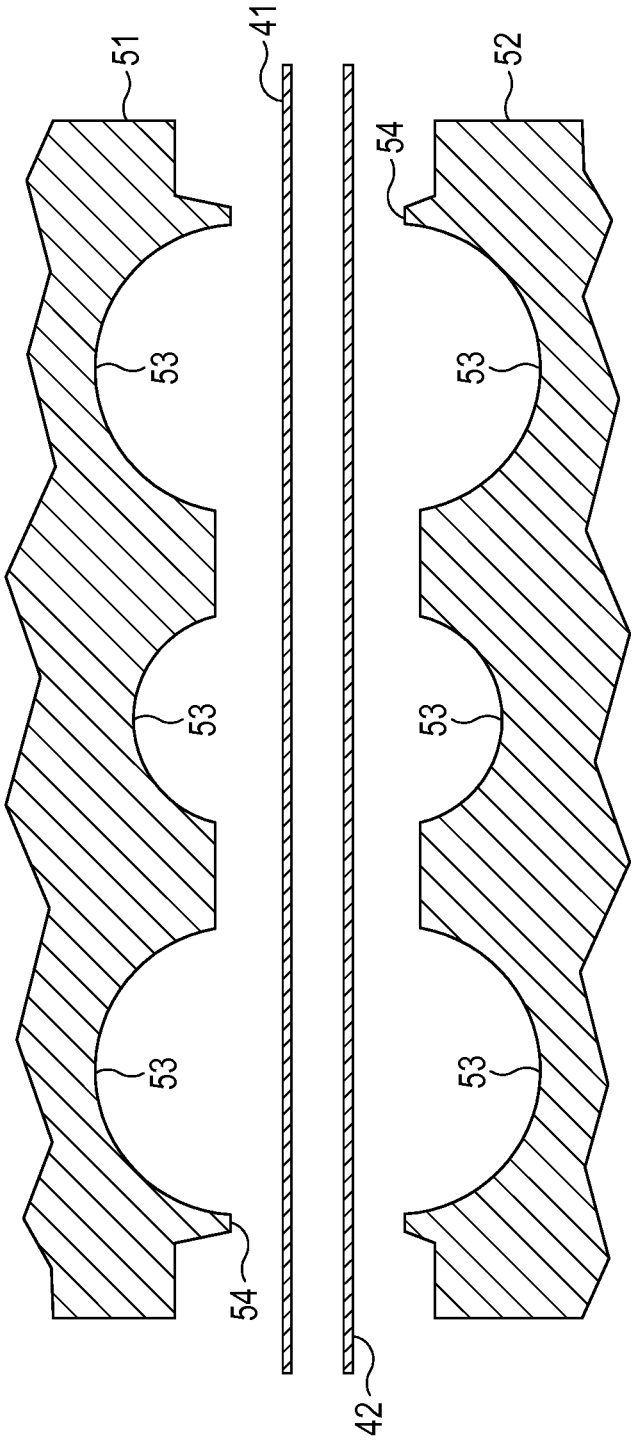

Figure 12A

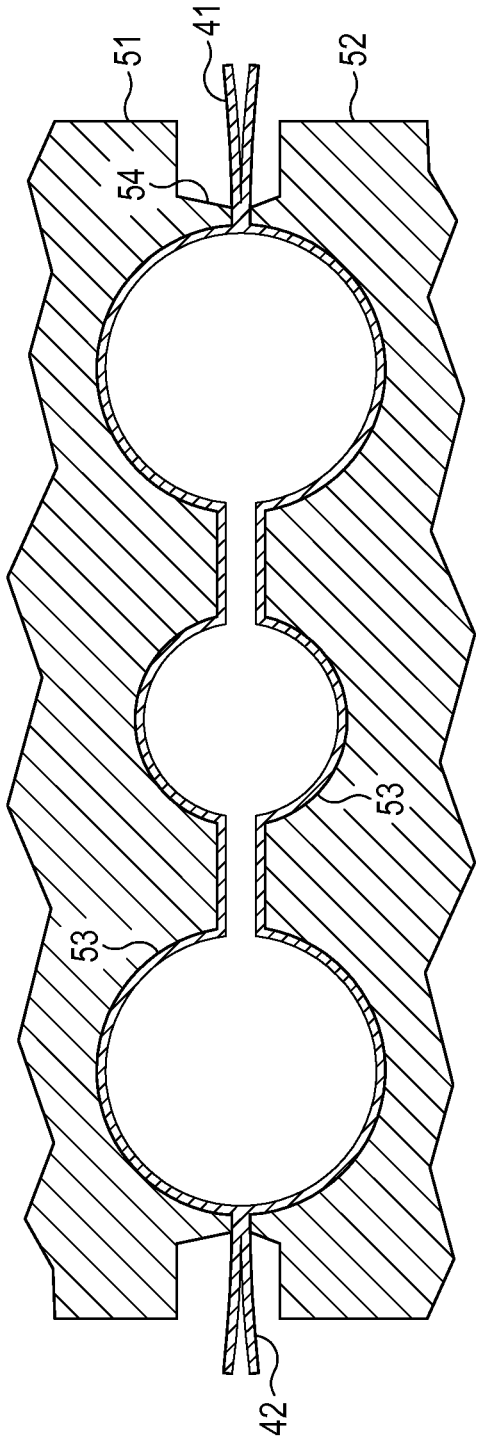

Figure 12B

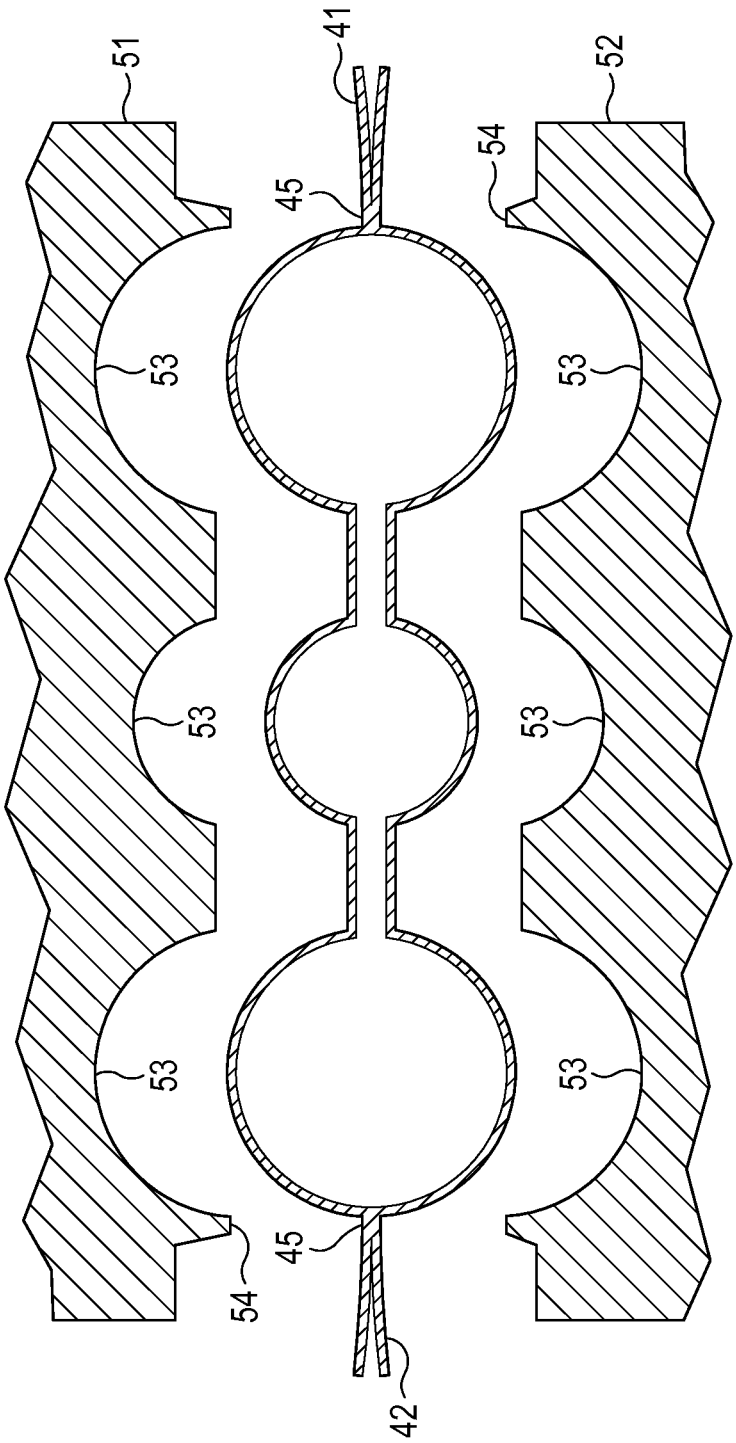

Figure 12C

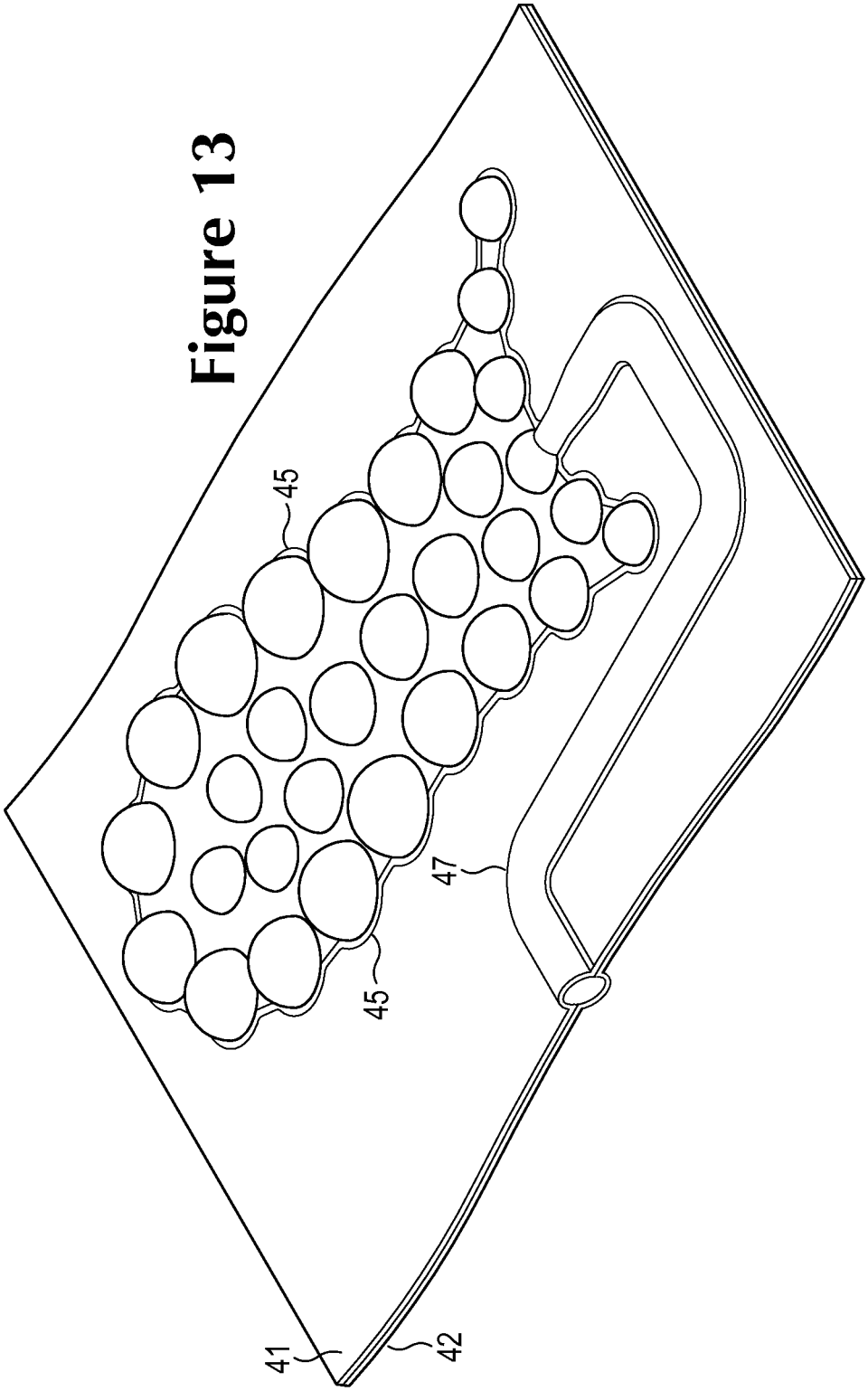

Figure 13

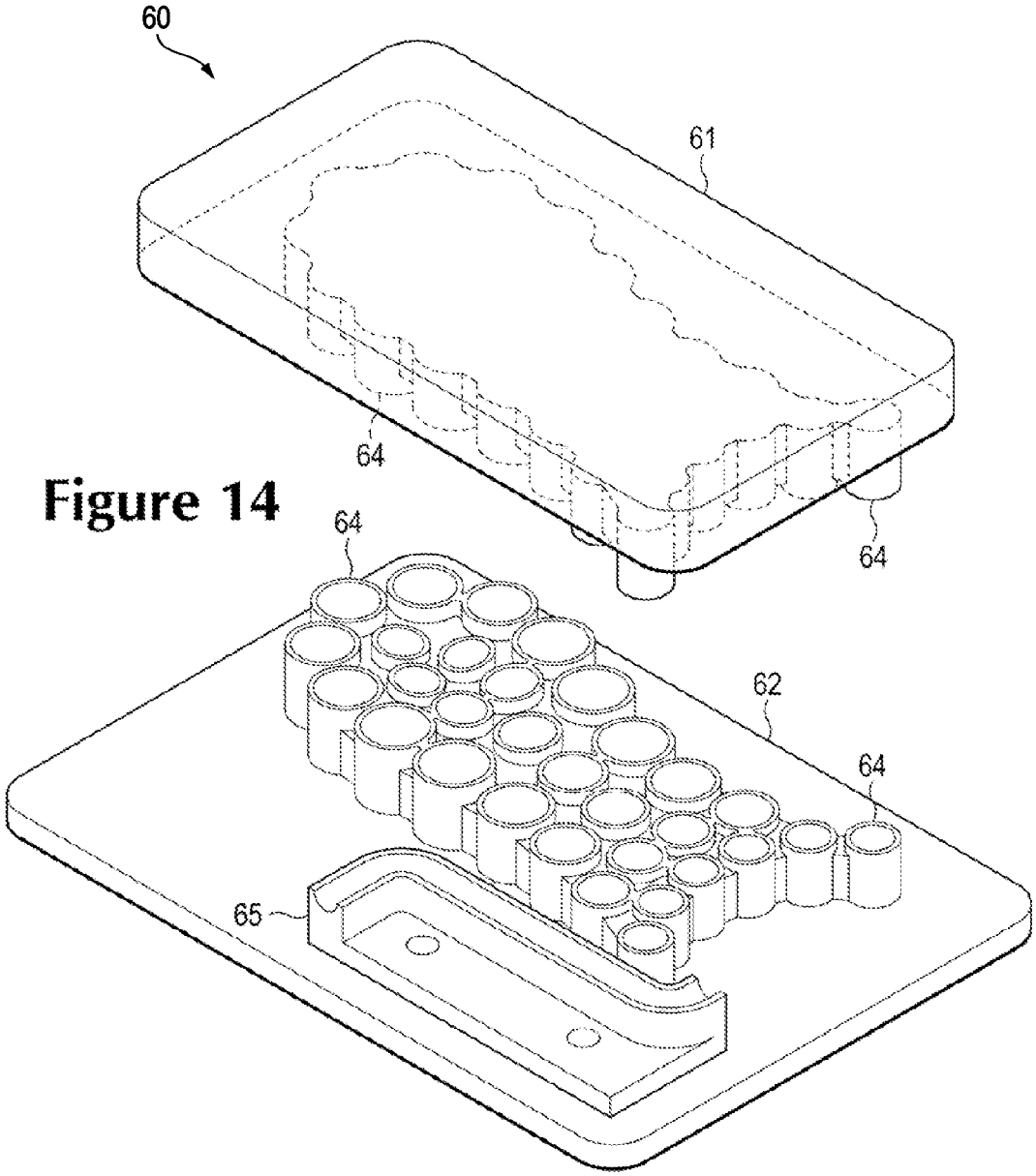

Figure 14

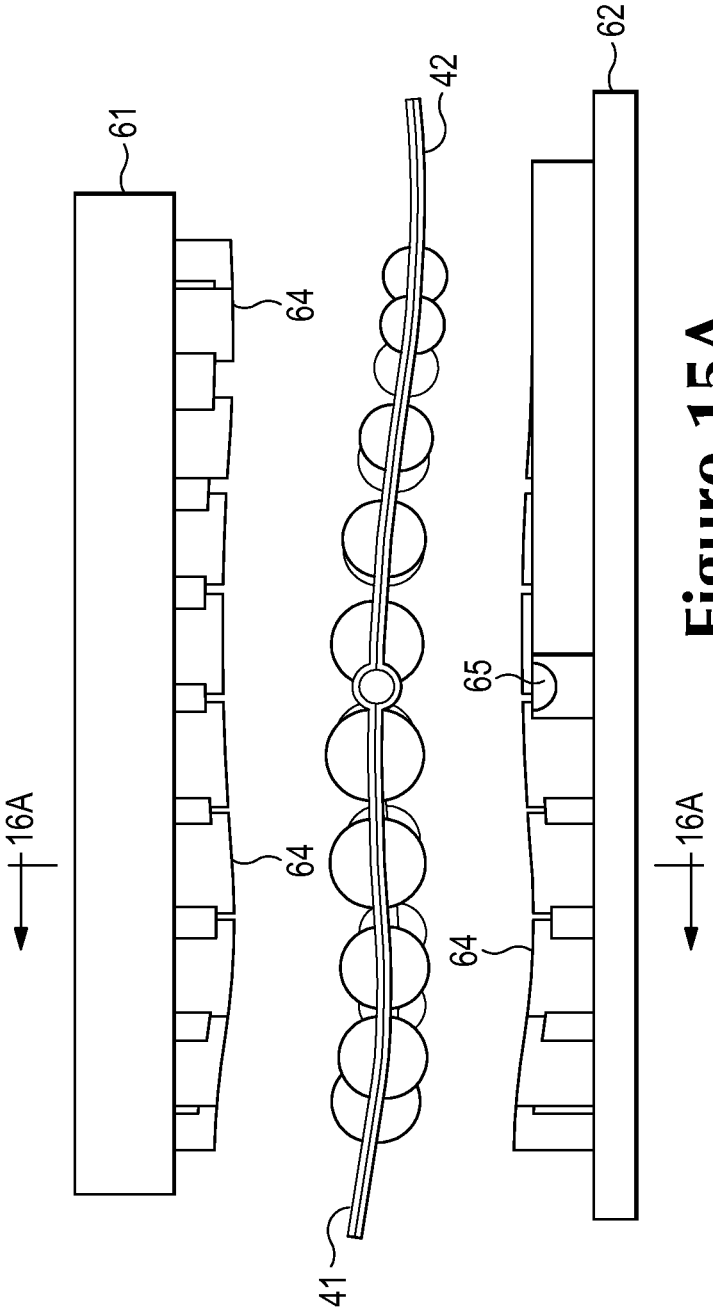

Figure 15A

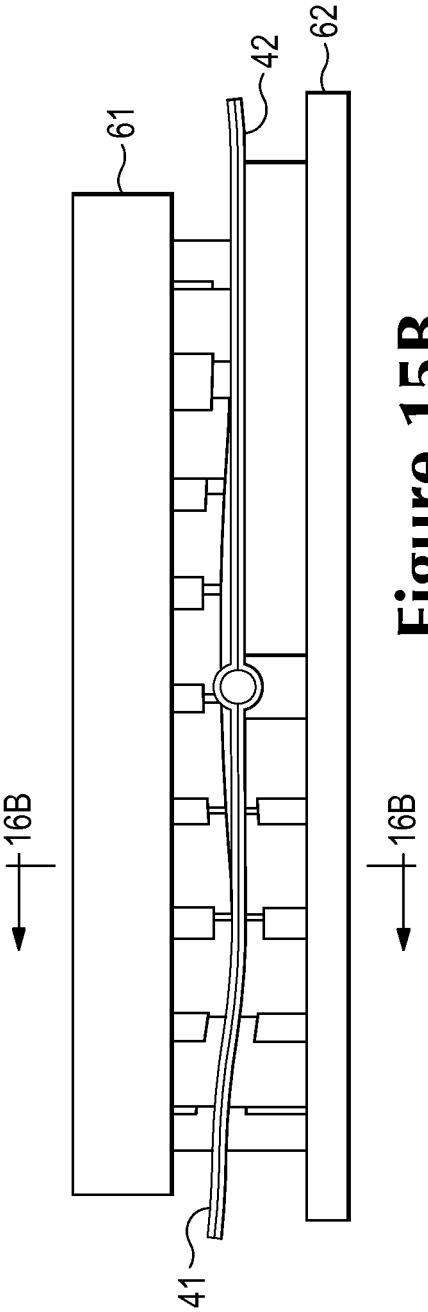

Figure 15B

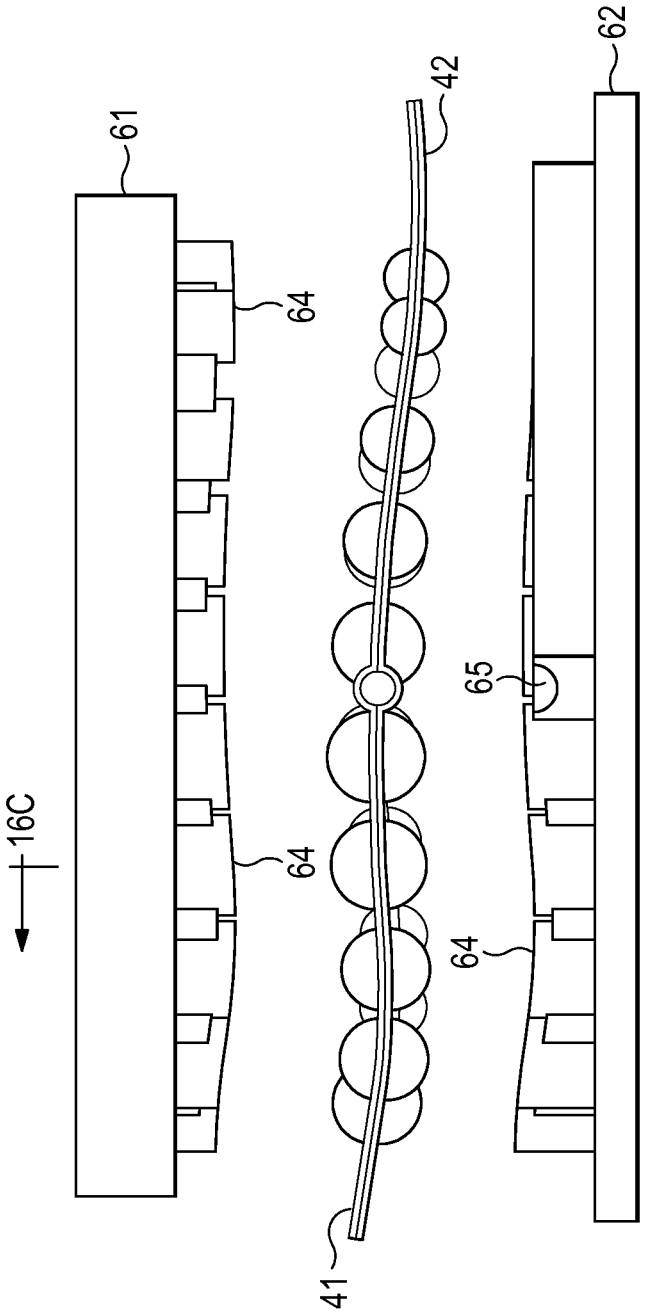

Figure 15C

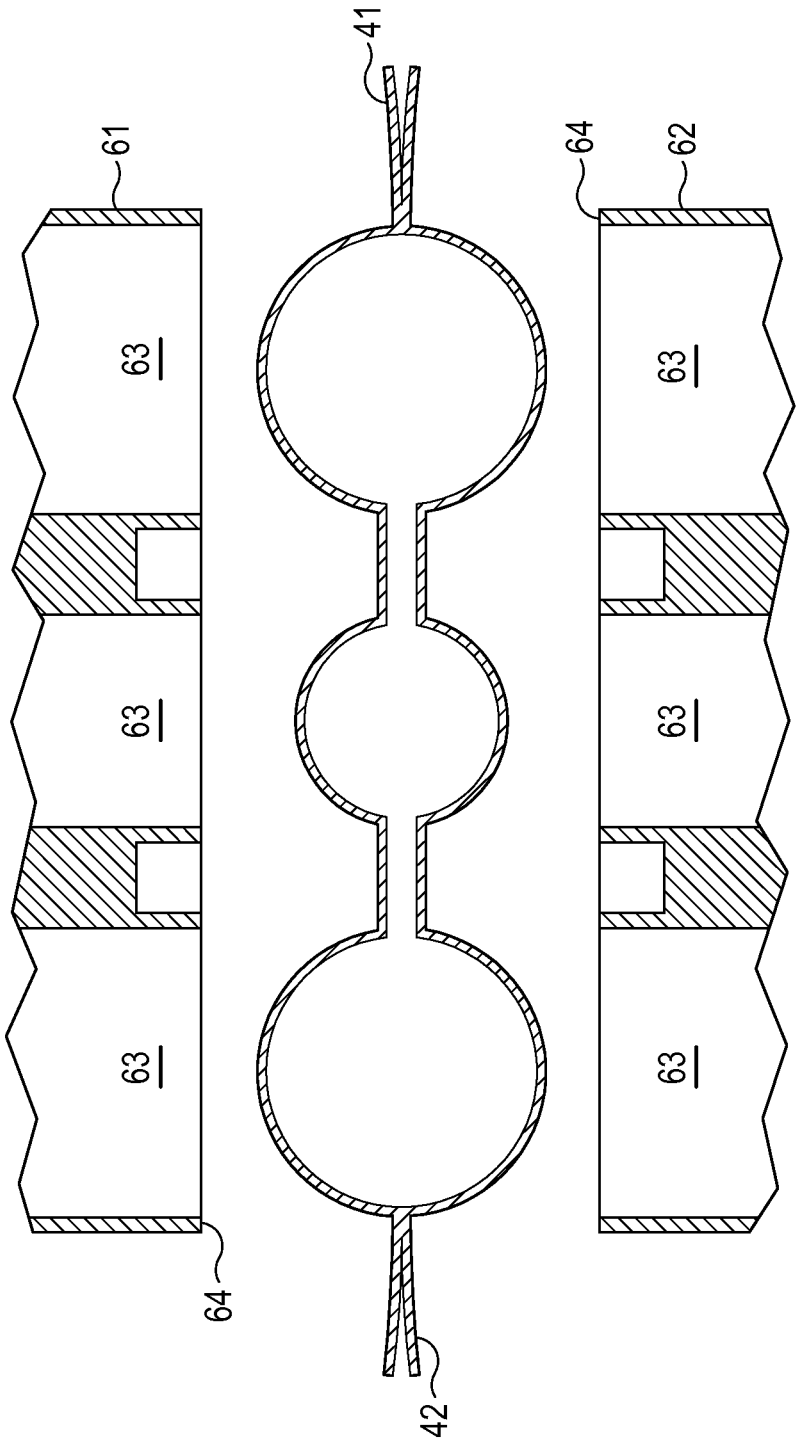

Figure 16A

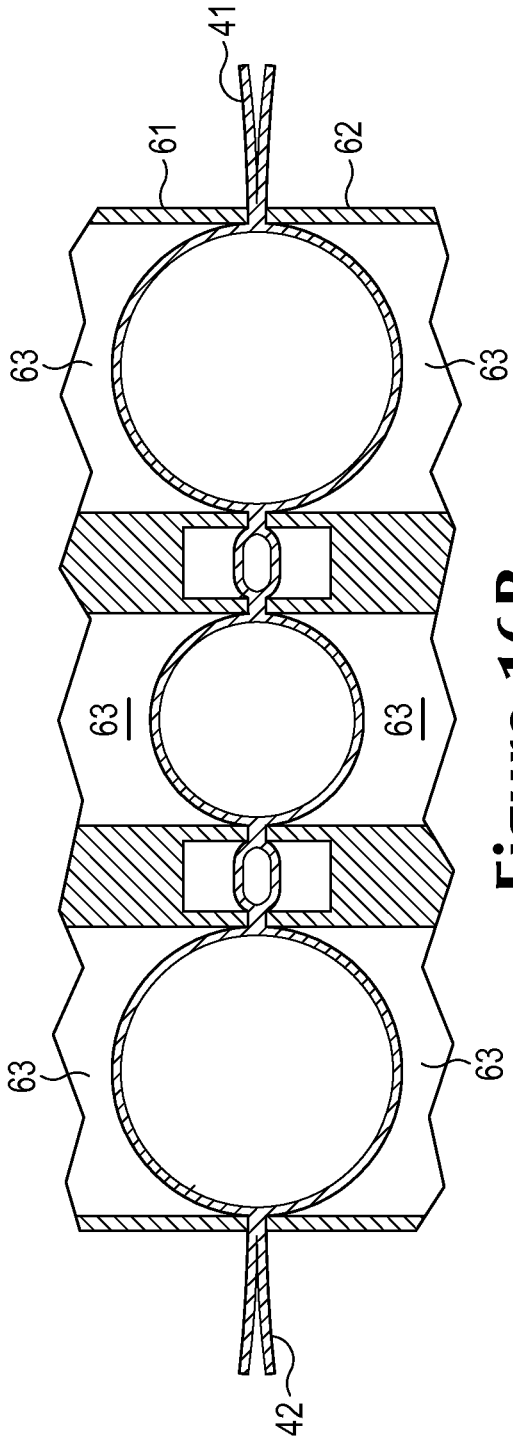

Figure 16B

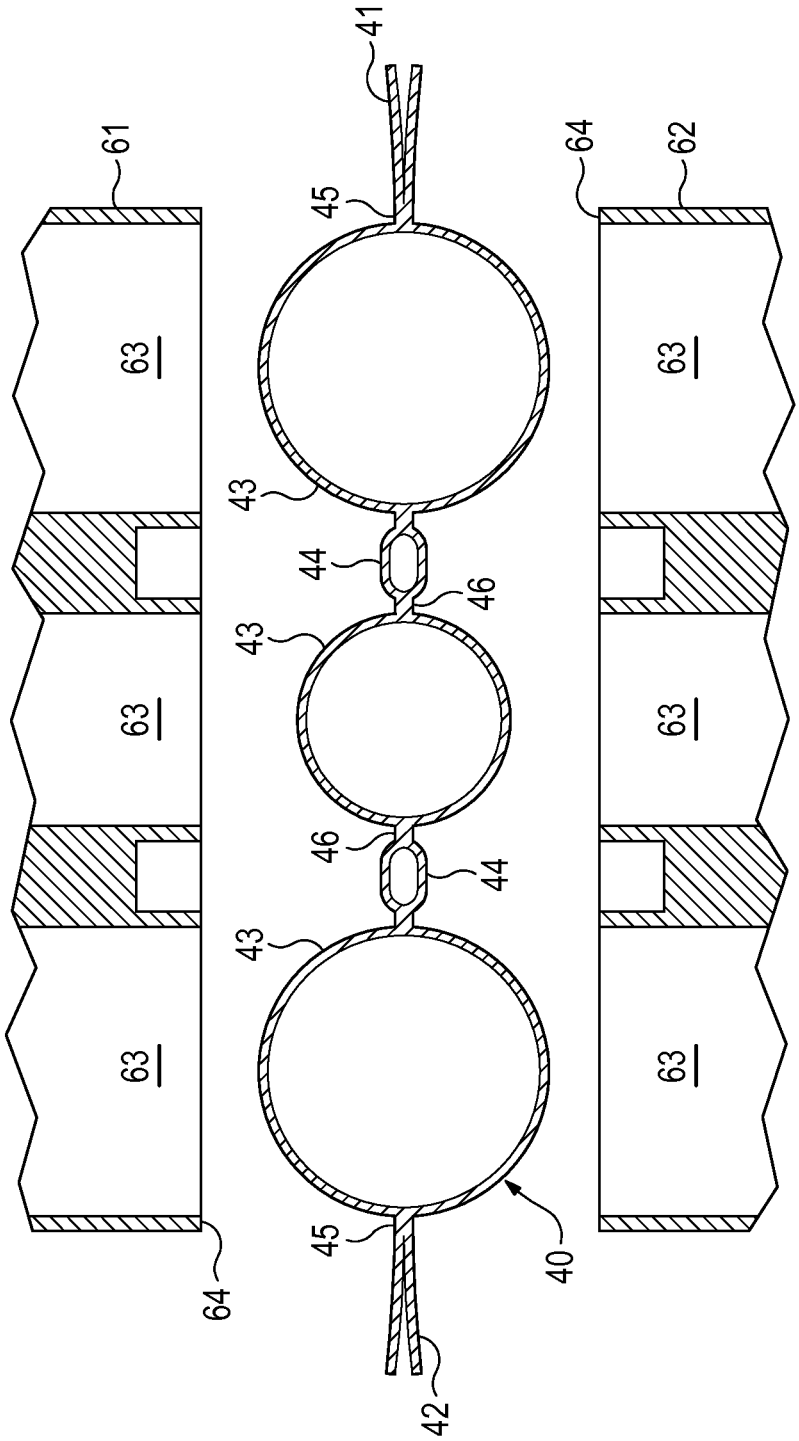

Figure 16C

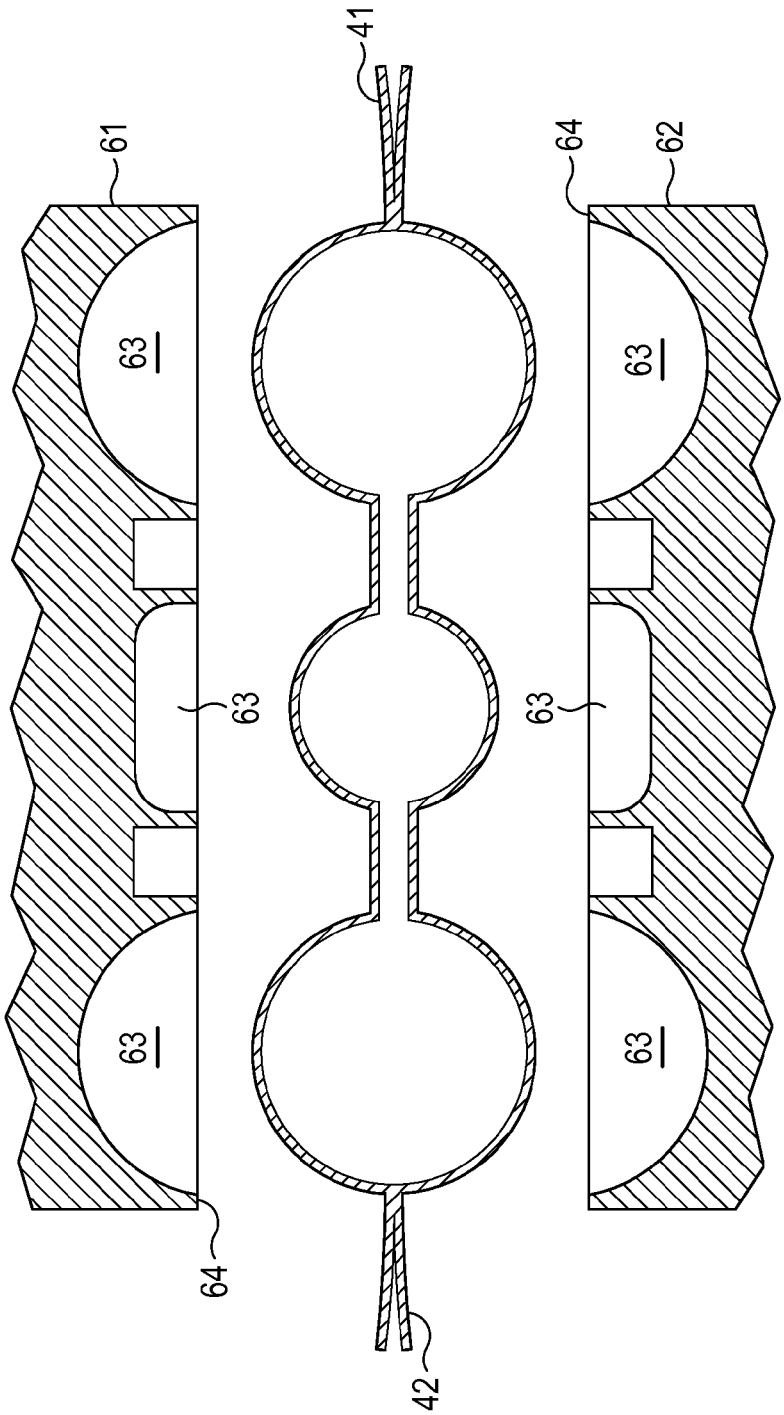

Figure 17

FLUID-FILLED STRUCTURE

BACKGROUND

Articles of footwear generally include two primary elements, an upper and a sole structure. The upper is formed from a variety of material elements (e.g., textiles, foam, leather, and synthetic leather) that are stitched or adhesively bonded together to form a void on the interior of the footwear for comfortably and securely receiving a foot. More particularly, the upper generally extends over the instep and toe areas of the foot, along the medial and lateral sides of the foot, under the foot, and around the heel area of the foot. In some articles of footwear, such as basketball footwear and boots, the upper may extend upward and around the ankle to provide support or protection for the ankle. Access to the void on the interior of the upper is generally provided by an ankle opening in a heel region of the footwear. A lacing system is often incorporated into the upper to adjust the fit of the upper, thereby permitting entry and removal of the foot from the void within the upper. The lacing system also permits the wearer to modify certain dimensions of the upper, particularly girth, to accommodate feet with varying dimensions. In addition, the upper may include a tongue that extends under the lacing system to enhance adjustability of the footwear.

The sole structure is located adjacent to a lower portion of the upper and is generally positioned between the foot and the ground. In many articles of footwear, including athletic footwear, the sole structure conventionally incorporates a sockliner, a midsole, and an outsole. The sockliner is a thin compressible member located within the void and adjacent to a lower surface of the void to enhance footwear comfort. The midsole, which is be secured to a lower area of the upper and extends downward from the upper, forms a middle layer of the sole structure. In addition to attenuating ground reaction forces (i.e., providing cushioning for the foot), the midsole may limit foot motions or impart stability, for example. The outsole, which may be secured to a lower surface of the midsole, forms the ground-contacting portion of the footwear and is usually fashioned from a durable and wear-resistant material that includes texturing to improve traction.

A variety of conventional midsoles incorporate a fluid-filled chamber that increases durability of the footwear and further enhances the attenuation of ground reaction forces in the sole structure. In some footwear configurations, the fluid-filled chamber may be at least partially encapsulated within a polymer foam material. In other footwear configurations, the fluid-filled chamber may substantially replace the polymer foam material. That is, substantially all of the midsole or a majority of the midsole may be formed from the fluid-filled chamber. In general, fluid-filled chambers are formed from a polymer material that is sealed and pressurized, but may also be substantially unpressurized or pressurized by an external source. In some configurations, textile or foam members may be located within the chamber, or reinforcing structures may be bonded to an exterior surface of the chamber to impart shape to or retain an intended shape of the chamber.

Fluid-filled chambers may be manufactured through various processes, including a two-film technique, thermoforming, and blowmolding. In the two-film technique, two planar sheets of polymer material are bonded together in various locations to form the chamber. In order to pressurize the chamber, a nozzle or needle connected to a fluid pressure source is inserted into a fill inlet formed in the chamber. Following pressurization, the fill inlet is sealed and the nozzle is removed. Thermoforming is similar to the two-film technique, but utilizes a heated mold that forms or otherwise

shapes the sheets of polymer material during the manufacturing process. In blowmolding, a molten or otherwise softened elastomeric material in the shape of a tube (i.e., a parison) is placed in a mold having the desired overall shape and configuration of the chamber. The mold has an opening at one location through which pressurized air is provided. The pressurized air induces the liquefied elastomeric material to conform to the shape of the inner surfaces of the mold, thereby forming the chamber, which may then be pressurized.

Although fluid-filled chambers may be utilized in footwear, various configurations of the fluid-filled chambers may also be utilized in other products. For example, fluid-filled chambers may be incorporated into backpack straps, golf clubs, and cushions.

SUMMARY

Various fluid-filled chambers are discussed below. In one configuration, a chamber includes a pair of polymer layers that define a plurality of subchambers and a web area. The subchambers are protruding portions of the polymer layers that enclose a fluid, and the web area is portions of the polymer layers that are located between the subchambers and lay adjacent to each other. The subchambers may have greater thickness than the web area. A perimeter bond joining the polymer layers and extends around a periphery of the chamber. In addition, a plurality of interior bonds join the polymer layers and extending around the subchambers, which may seal the fluid within the subchambers.

Various methods for manufacturing chambers are discussed below. In one example, the method includes molding a first polymer layer and a second polymer layer to define a plurality of protrusions. A first bond is formed between the first polymer layer and the second polymer layer, and the first bond extends around a periphery of the chamber. A fluid is injected between the first polymer layer and the second polymer layer, and the fluid enters the protrusions. Additionally, a plurality of second bonds are formed between the first polymer layer and the second polymer layer, and the second bonds extend around each of the protrusions to seal the fluid within the protrusions.

The advantages and features of novelty characterizing aspects of the invention are pointed out with particularity in the appended claims. To gain an improved understanding of the advantages and features of novelty, however, reference may be made to the following descriptive matter and accompanying figures that describe and illustrate various configurations and concepts related to the invention.

FIGURE DESCRIPTIONS

The foregoing Summary and the following Detailed Description will be better understood when read in conjunction with the accompanying figures.

FIG. **1** is lateral side elevational view of an article of footwear.

FIG. **2** is a medial side elevational view of the article of footwear.

FIG. **3** is a cross-sectional view of the article of footwear, as defined by section line **3** in FIG. **2**.

FIG. **4** is a perspective view of a chamber from the article of footwear.

FIG. **5** is a top plan view of the chamber.

FIG. **6** is a side elevational view of the chamber.

FIGS. **7A-7C** are cross-sectional views of the chamber, as respectively defined by section lines **7A-7C** in FIG. **5**.

FIGS. **8**A-**8**K are top plan views corresponding with FIG. **5** and depicting further configurations of the chamber.

FIGS. **9**A-**9**E are cross-sectional views corresponding with FIG. **7**A and depicting further configurations of the chamber.

FIG. **10** is a perspective view of a molding tool.

FIGS. **11**A-**11**C are side elevational views of a molding process that utilizes the molding tool in the manufacture of the chamber.

FIGS. **12**A-**12**C are cross-sectional views of the molding process, as respectively defined by section lines **12**A-**12**C in FIGS. **11**A-**11**C.

FIG. **13** is a perspective view of material forming the chamber following the molding process.

FIG. **14** is a perspective view of a inflate-bond tool.

FIGS. **15**A-**15**C are side elevational views of a bonding and inflation process that utilizes the bond and inflate tool in the manufacture of the chamber.

FIGS. **16**A-**16**C are cross-sectional views of the bonding and inflation process, as respectively defined by section lines **16**A-**16**C in FIGS. **15**A-**15**C.

FIG. **17** is a cross-sectional views corresponding with FIG. **16**A and depicting another configuration of the bonding and inflation process.

DETAILED DESCRIPTION

The following discussion and accompanying figures disclose various configurations of fluid-filled chambers and methods for manufacturing the chambers. Although the chambers are disclosed with reference to footwear having a configuration that is suitable for running, concepts associated with the chambers may be applied to a wide range of athletic footwear styles, including basketball shoes, cross-training shoes, football shoes, golf shoes, hiking shoes and boots, ski and snowboarding boots, soccer shoes, tennis shoes, and walking shoes, for example. Concepts associated with the chambers may also be utilized with footwear styles that are generally considered to be non-athletic, including dress shoes, loafers, and sandals. In addition to footwear, the chambers may be incorporated into other types of apparel and athletic equipment, including helmets, gloves, and protective padding for sports such as football and hockey. Similar chambers may also be incorporated into cushions, backpack straps, golf clubs, and other compressible structures utilized in household goods and industrial products. Accordingly, chambers incorporating the concepts disclosed herein may be utilized with a variety of products.

General Footwear Structure

An article of footwear **10** is depicted in FIGS. **1**-**3** as including an upper **20** and a sole structure **30**. For reference purposes, footwear **10** may be divided into three general regions: a forefoot region **11**, a midfoot region **12**, and a heel region **13**, as shown in FIGS. **1** and **2**. Footwear **10** also includes a lateral side **14** and a medial side **15**. Forefoot region **11** generally includes portions of footwear **10** corresponding with the toes and the joints connecting the metatarsals with the phalanges. Midfoot region **12** generally includes portions of footwear **10** corresponding with the arch area of the foot, and heel region **13** corresponds with rear portions of the foot, including the calcaneus bone. Lateral side **14** and medial side **15** extend through each of regions **11**-**13** and correspond with opposite sides of footwear **10**. Regions **11**-**13** and sides **14**-**15** are not intended to demarcate precise areas of footwear **10**. Rather, regions **11**-**13** and sides **14**-**15** are intended to represent general areas of footwear **10** to aid in the following discussion. In addition to footwear **10**, regions **11**-**13** and sides **14**-**15** may also be applied to upper **20**, sole structure **30**, and individual elements thereof.

Upper **20** is depicted as having a substantially conventional configuration incorporating a plurality material elements (e.g., textiles, foam, leather, and synthetic leather) that are stitched or adhesively bonded together to form an interior void for securely and comfortably receiving a foot. The material elements may be selected and located with respect to upper **20** in order to selectively impart properties of durability, air-permeability, wear-resistance, flexibility, and comfort, for example. An ankle opening **21** in heel region **13** provides access to the interior void. In addition, upper **20** may include a lace **22** that is utilized in a conventional manner to modify the dimensions of the interior void, thereby securing the foot within the interior void and facilitating entry and removal of the foot from the interior void. Lace **22** may extend through apertures in upper **20**, and a tongue portion of upper **20** may extend between the interior void and lace **22**. Given that various aspects of the present discussion primarily relate to sole structure **30**, upper **20** may exhibit the general configuration discussed above or the general configuration of practically any other conventional or non-conventional upper. Accordingly, the overall structure of upper **20** may vary significantly.

Sole structure **30** is secured to upper **20** and has a configuration that extends between upper **20** and the ground. In addition to attenuating ground reaction forces (i.e., providing cushioning for the foot), sole structure **30** may provide traction, impart stability, and limit various foot motions, such as pronation. The primary elements of sole structure **30** are a midsole **31**, an outsole **32**, a sockliner **33**, and a chamber **40**. Midsole **31** is secured to a lower area of upper **20** and may be formed from various polymer foam materials (e.g., polyurethane or ethylvinylacetate foam) that extend through each of regions **11**-**13** and between sides **14** and **15**. Additionally, midsole **31** at least partially envelops or receives chamber **40**, which will be discussed in greater detail below. Outsole **32** is secured to a lower surface of midsole **31** and may be formed from a textured, durable, and wear-resistant material (e.g., rubber) that forms the ground-contacting portion of footwear **10**. Sockliner **33**, as depicted in FIG. **3**, is located within a lower portion of the void in upper **20** and is positioned to contact a plantar (i.e., lower) surface of the foot to enhance the comfort of footwear **10**. In addition to these elements, sole structure **30** may incorporate one or more support members, moderators, or reinforcing structures, for example, that further enhance the ground reaction force attenuation characteristics of sole structure **30** or the performance properties of footwear **10**.

When incorporated into sole structure **30**, chamber **40** has a shape that fits within a perimeter of midsole **31** and extends through heel region **13** and a portion of midfoot region **12**, and also extends from lateral side **14** to medial side **15**. Although chamber **40** is depicted as being entirely encapsulated within the polymer foam material of midsole **31**, chamber **40** may be exposed on either of sides **14** and **15** in some configurations of footwear **10**. When the foot is located within upper **20**, chamber **40** extends under the foot in order to attenuate ground reaction forces that are generated when sole structure **30** is compressed between the foot and the ground during various ambulatory activities, such as running and walking. In some configurations, chamber **40** may protrude outward from midsole **31**, may extend further into midfoot region **12**, may extend forward to forefoot region **11**, or may be solely located in forefoot region **11**. In other configurations, chamber **40** may form a portion of an upper surface or a lower surface of midsole **31**, chamber **40** may be positioned to form the

ground-contacting portion of footwear **10**, chamber **40** may form substantially all of midsole **31**, or may be located within sockliner **33**. Accordingly, the shape and dimensions of chamber **40**, as well as the position of chamber **40** within footwear **10**, may vary significantly.

Chamber Configuration

Chamber **40** is depicted individually in FIGS. **4**-**7**B and is formed from a first layer **41** and a second layer **42**. Each of layers **41** and **42** are molded or otherwise shaped to define various fluid-filled subchambers **43** that are separated and interconnected by a web area **44**. Layers **41** and **42** are bonded or joined together in various locations to form (a) a peripheral bond **45** around a periphery of chamber **40** and (b) a plurality of interior bonds **46** around each of subchambers **43**.

Layers **41** and **42** form opposite sides of chamber **40** and cooperatively define portions of subchambers **43** and web area **44**. More particularly, opposite sides of each subchamber **43** are formed from layers **41** and **42**, and opposite sides of web area **44** are also formed from layers **41** and **42**. As oriented in the various figures, first layer **41** forms an upper portion of chamber **40**, whereas second layer **42** forms a lower portion of chamber **40**. In other configurations, this orientation may be reversed such that layers **41** and **42** respectively form the lower and upper portions of chamber **40**. Although peripheral bond **45** is depicted as being centrally-located between upper and lower portions of chamber **40**, peripheral bond may also be off-set from the center, which may enhance the aesthetics of chamber **40**.

A wide range of polymer materials may be utilized for layers **41** and **42**. In selecting a material for layers **41** and **42**, the ability of the material to prevent the diffusion of the fluid contained by each of subchambers **43** may be considered, as well as the engineering properties of the material (e.g., tensile strength, stretch properties, fatigue characteristics, dynamic modulus, and loss tangent). When formed from a polymer material, layers **41** and **42** may have a thickness of approximately 1.0 millimeter, but the thickness may range from 0.25 to 4.0 millimeters or more, for example, depending upon the specific polymer material utilized. Examples of thermoplastic polymer materials that may be suitable for layers **41** and **42** include urethane, polyurethane, polyester, polyester polyurethane, and polyether polyurethane. Various thermoset polymer materials may also be utilized for layers **41** and **42**. More specific examples of materials that may be utilized for layers **41** and **42** include the various materials disclosed in any of (a) U.S. Pat. Nos. 4,183,156, 4,219,945, 4,936,029, and 5,042,176 to Rudy; (b) U.S. Pat. Nos. 5,713,141 and 5,952,065 to Mitchell, et al.; and (c) U.S. Pat. Nos. 6,013,340, 6,082,025, 6,127,026, 6,203,868, and 6,321,465 to Bonk, et al.

Subchambers **43** exhibit a generally spherical shape and are distributed throughout chamber **40**. As discussed above, layers **41** and **42** cooperatively define opposite sides or portions of subchambers **43**. More particularly, each of layers **41** and **42** form various hemispherical areas (i.e., protrusions/indentations in layers **41** and **42**) that cooperatively impart the spherical shapes to each of subchambers **43** when combined. Each of subchambers **43** have a generally hollow configuration that encloses a fluid (e.g., a gas, liquid, gel). Interior bonds **46** extend around subchambers **43** to prevent the fluid from escaping chamber **40** or passing between subchambers **43**, thereby isolating subchambers **43** from fluid communication with each other. The fluid within subchambers **43** may be pressurized between zero and three-hundred-fifty kilopascals (i.e., approximately fifty-one pounds per square inch) or more. In addition to air and nitrogen, the fluid may include any of the gasses disclosed in U.S. Pat. No. 4,340,626 to Rudy.

Although subchambers **43** have similar shapes, the overall size or volume of subchambers **43** may vary significantly. For example, subchambers **43** located in heel region **13** exhibit a generally larger diameter, volume, or size than subchambers **43** located in midfoot region **12**. Similarly, subchambers **43** located in a peripheral area of chamber **40** (i.e., adjacent to peripheral bond **45**) exhibit a generally larger diameter, volume, or size than subchambers **43** located in a central area of chamber **40**. This configuration places larger subchambers **43** under the heel of the foot and at the periphery of the foot.

Web area **44** extends between and generally interconnects the various subchambers **43**. Whereas subchambers **43** protrude outward to form structures for receiving the fluid within chamber **40**, web area **44** exhibits lesser thickness and forms portions of layers **41** and **42** that are adjacent to each other and may lay in contact with each other. Although some of subchambers **43** are immediately adjacent to other subchambers **43**, a portion of web area **44** is generally located between adjacent subchambers **43**, thereby extending between interior bonds **46** of the adjacent subchambers **43**. Referring to the cross-sectional views of FIGS. **7**A-**7**C, for example, the amount of web area **44** between adjacent subchambers **43** may vary considerably. In some areas of chamber **40**, subchambers **43** exhibit a thickness or overall height that is ten times a thickness or height of web area **44**. In general, however, the thickness of subchambers **43** ranges from three to greater than ten times the thickness of web area **44**. In the areas between subchambers **43**, web area **44** generally lays parallel to a plane of chamber **40** and does not include structural elements, such as fluid communication passages.

Peripheral bond **45** and interior bonds **46** form areas of chamber **40** where layers **41** and **42** are secured, bonded, or otherwise joined to each other. Peripheral bond **45** extends around the periphery of chamber **40**, thereby joining layers **41** and **42** at the periphery. Similarly, interior bonds **46** extend around each of subchambers **43**, thereby joining layers **41** and **42** at edges of each subchamber **43**. Whereas peripheral bond **45** is primarily located at an edge of chamber **40**, interior bonds **46** are primarily located at an interior of chamber **40**. In areas where subchambers **43** are located at the periphery of chamber **40**, however, interior bonds **46** coincide or otherwise overlap with peripheral bond **45**. Although web area **44** may extend between adjacent interior bonds **46**, as depicted in FIGS. **7**A and **7**C, two interior bonds **46** may effectively overlap between subchambers **43** that are immediately adjacent to each other, as depicted in FIG. **7**B.

An advantage to chamber **40** relates to flexibility. More particularly, the configuration of web area **44** enhances the overall flexibility of chamber **40**. In some fluid-filled structures, conduits or fluid communication passages extend between subchambers in order to transfer fluid to the subchambers during the manufacturing process. In chamber **40**, however, conduits and fluid communication passages are absent between subchambers **43**. That is, the manufacturing process for chamber **40**, which is discussed in greater detail below, does not rely upon conduits to transfer fluid to the various subchambers. As a result, conduits and other molded structures are absent from web area **44**, which increases the flexibility of web area **44**, thereby increasing the overall flexibility of chamber **40**.

Another advantage to chamber **40** relates to the configurability of the compressibility of each subchamber **43**. In general, the compressibility of an individual subchamber **43** depends upon various factors, including (a) the thickness of layers **41** and **42** forming the subchamber **43**, (b) the pressure of the fluid within the subchamber **43**, and (c) the diameter or overall volume of the subchamber **43**. By varying any of these

factors, the compressibility of the individual subchamber **43** may be modified. More particularly, the compressibility may be increased by (a) decreasing the thickness of layers **41** and **42**, (b) decreasing the pressure of the fluid, or (c) increasing the diameter or overall volume. Similarly, the compressibility may be decreased by (a) increasing the thickness of layers **41** and **42**, (b) increasing the pressure of the fluid, or (c) decreasing the diameter or overall volume. By varying these factors throughout chamber **40**, the compressibility of particular areas of chamber **40** may be configured for particular uses of chamber **40**. As discussed in greater detail below, each of these factors may be modified during the manufacturing process of chamber **40**.

The configuration of chamber **40** discussed above provides one example of a suitable configuration for use in footwear **10** and other products. A variety of other configurations may also be utilized. For example, the overall shape of chamber **40** may vary to include a circular configuration, as depicted in FIG. **8**A, or a triangular configuration, as depicted in FIG. **8**B, each of which may be suitable for a variety of products. Other shapes specifically adapted for footwear, such as footwear **10**, may also be used, as in the shoe outline shape depicted in FIG. **8**C. Although subchambers **43** may be positioned as depicted in FIG. **5**, a more regular spacing may also be utilized. Referring to FIG. **8**D, subchambers **43** are positioned in rows and columns and spaced from each other. A similar configuration is depicted in FIG. **8**E, wherein subchambers **43** contact or are placed in relative proximity to adjacent subchambers **43**. FIGS. **8**D and **8**E also depict a configuration wherein the diameters or volumes of the various subchambers **43** are substantially identical. The shapes of subchambers **43** may also vary significantly to include hexagonal, square, varied, and irregular shapes, as depicted in FIGS. **8**F-**8**I. In some configurations, web area **44** may be partially removed to form apertures extending through chamber **40**, as depicted in FIG. **8**J. Similarly, web area **44** may be entirely removed to form a plurality of discrete or separate structures formed from subchambers **43**, as depicted in FIG. **8**K. Accordingly, a variety of features relating to the shape of chamber **40**, the positions, spacing, and shapes of subchambers **43**, and the configuration of web area **44**, for example, may be modified depending upon the intended use or purpose of chamber **40**.

In addition to the variations discussed above with respect to FIGS. **8**A-**8**K, further variations are depicted in FIGS. **9**A-**9**E. Referring to the cross-sectional views of FIGS. **7**A and **7**C, layers **41** and **42** are spaced from each other in web area **44**. If, for example, some of the fluid utilized to fill or pressurize subchambers **43** is present in web area **44**, layers **41** and **42** may separate. In some configurations, however, layers **41** and **42** may contact each other in web area **44**, as depicted in FIG. **9**A. Similarly, layers **41** and **42** may be bonded to each other in web area **44**, as depicted in FIG. **9**B. Although the portions of subchambers **43** that are formed from layers **41** and **42** may be similarly-shaped, these portions may also have different configurations. Referring to FIG. **9**C, for example, first layer **41** forms semicircular areas for chambers **43**, wherein second layer **42** is planar. Layers **41** and **42** may also form structures of different size, as depicted in FIG. **9**D, or with different shapes, as depicted in FIG. **9**E. Accordingly, a variety of additional features relating to chamber **40** may be modified depending upon the intended use or purpose of chamber **40**.

Chamber Manufacturing

In manufacturing chamber **40**, two general processes are utilized: a molding process and an inflation and bonding process. In general, the molding process involves shaping of layers **41** and **42**, and may also involve bonding layers **41** and **42** to form peripheral bond **45**. The inflation and bonding process involves inflating or pressurizing subchambers **43** and bonding layers **41** and **42** to form interior bonds **46**. Each of these processes will be discussed in greater detail below.

A molding tool **50** is depicted in FIG. **10** as having a first mold portion **51** and a second mold portion **52**. Mold portions **51** and **52** cooperatively define an internal cavity where layers **41** and **42** are molded to exhibit the general shape of chamber **40**. More particularly, mold portions **51** and **52** each form various indentations **53** that correspond in location and size with subchambers **43**, and mold portions **51** and **52** each define a peripheral ridge **54** that corresponds in location with peripheral bond **45**. In other configurations, mold portions **51** and **52** may cooperatively define two internal cavities, one having the configuration of chamber **40**, which is suitable for footwear **10** when configured for the right foot of the wearer, and the other having the configuration of a mirror image of chamber **40**, which is suitable for footwear **10** when configured for the left foot of the wearer.

The manner in which molding tool **50** is utilized to form chamber **40** from layers **41** and **42** will now be discussed in greater detail. Initially, layers **41** and **42** are positioned between mold portions **51** and **52**, as depicted in FIGS. **11**A and **12**A. At this stage of the molding process, layers **41** and **42** are planar sheets of a polymer material that have not been molded or otherwise shaped. A plurality of conduits may extend through molding tool **50** in order to channel a heated liquid, such as water or oil, through molding tool **50**, thereby raising the overall temperature of molding tool **50**. When layers **41** and **42** are positioned within molding tool **50**, heat may be transferred from molding tool **50** to layers **41** and **42** in order to raise the temperature of layers **41** and **42**. At elevated temperatures that depend upon the specific polymer material utilized, layers **41** and **42** soften or become more deformable, which facilitates shaping and bonding. In some manufacturing processes, various conductive or radiative heaters may be utilized to heat layers **41** and **42** prior to placement within molding tool **50** in order to decrease manufacturing times.

Once layers **41** and **42** are positioned between mold portions **51** and **52**, mold portions **51** and **52** translate toward each other such that layers **41** and **42** enter the internal cavity within molding tool **50** and are shaped, as depicted in FIGS. **11**B and **12**B. As molding tool **50** contacts and envelops portions of layers **41** and **42**, a fluid (e.g., air) having a positive pressure in comparison with ambient air may be injected between layers **41** and **42** to induce layers **41** and **42** to respectively contact and conform to the contours of mold portions **51** and **52** (i.e., enter indentations **53**). Air may also be removed from the area between layers **41** and **42** and mold portions **51** and **52** through various vents, thereby drawing layers **41** and **42** onto the surfaces of mold portions **51** and **52**. That is, at least a partial vacuum may be formed between layers **41** and **42** and the surfaces of mold portions **51** and **52**. As the area between layers **41** and **42** is pressurized and air is removed from the area between molding tool **50** and layers **41** and **42**, layers **41** and **42** conform to the shape of molding tool **50**. More specifically, layers **41** and **42** stretch, bend, or otherwise conform to extend along the surfaces of indentations **53** within molding tool **50** and form the general shape of chamber **40**.

In addition to shaping layers **41** and **42**, mold portions **51** and **52** compress layers **41** and **42** together at locations corresponding with peripheral ridges **54**, thereby forming peripheral bond **45**. When exposed to sufficient heat, the polymer materials of layers **41** and **42** transition from a solid state to either a softened state or a semi-liquid state, particularly when a thermoplastic polymer material is utilized. When

sufficiently cooled, the polymer materials then transition back from the softened state to the solid state. Based upon these properties of polymer materials, bonding processes may be utilized to form a bond that joins portions layers **41** and **42**. As utilized herein, the term "bonding" or variants thereof is defined as a securing technique between two elements that involves a softening or melting of a polymer material within at least one of the elements such that the materials of the elements are secured to each other when cooled. Similarly, the term "bond" or variants thereof is defined as the bond, link, or structure that joins two elements through a process that involves a softening or melting of a polymer material within at least one of the elements such that the materials of the elements are secured to each other when cooled. Bonding may occur when only one of layers **41** and **42** includes a polymer material or when both of layers **41** and **42** include polymer materials. Additionally, bonding does not generally involve the use of adhesives, but involves directly bonding layers **41** and **42** to each other with heat. In some situations, however, adhesives or other securing techniques may be utilized to supplement peripheral bond **45**.

Layers **41** and **42** both form portions of subchambers **43** and web area **44**. The thickness of layers **41** and **42** prior to molding may be greater than the thickness of layers **41** and **42** in the resulting chamber **40**. The rationale for the difference in thickness between layers **41** and **42** is that the polymer material forming layers **41** and **42** may stretch during the thermoforming process. That is, the thickness differences compensate for thinning in layers **41** and **42** that occurs when layers **41** and **42** are stretched or otherwise deformed during the formation of subchambers **43** and web area **44**.

Once layers **41** and **42** are shaped within molding tool **50**, mold portions **51** and **52** separate such that layers **41** and **42** may be removed from molding tool **50**, as depicted in FIGS. **11**C and **12**C. Layers **41** and **42** are then permitted to cool. Referring to FIG. **13**, which depicts layers **41** and **42** following the molding process, a channel **47** is formed in layers **41** and **42**. Referring to FIG. **10**, at least first portion **51** is depicted as including a channel **55** extending from areas forming the internal cavity. During the molding process discussed above, channel **55** forms channel **47** in at least first layer **41**. As discussed with respect to the bonding and inflation process below, channel **47** may be utilized to inject the fluid into chamber **40**.

Based upon the discussion above, the molding process forms a structure that is similar to chamber **40**. Although the shape of subchambers **43** are formed in layers **41** and **42** and peripheral bond **45** is formed, layers **41** and **42** are not bonded to form interior bonds **46**. As a result, bonds or other structures joining layers **41** and **42** are absent in areas located inward from peripheral bond **45**. Additionally, excess portions of layers **41** and **42** may remain secured to the portions forming chamber **40**, and channel **47** is formed in the excess portions. Despite the formation of peripheral bond **45**, a gap or separation may be present between the portions of layers **41** and **42** forming subchambers **43** and web area **44**, as depicted in FIG. **12**C. That is, layers **41** and **42** may be spaced from each other in areas located inward from peripheral bond **45**

Although the molding process discussed above is a suitable manner of shaping layers **41** and **41** during the manufacture of chamber **40**, a blowmolding process may also be utilized. In general, a suitable blowmolding process involves positioning a parison between a pair of mold portions, such as mold portions **51** and **52**. The parison is a generally hollow and tubular structure of molten polymer material. In forming the parison, the molten polymer material is extruded from a die. The wall thickness of the parison may be substantially constant, or may vary around the perimeter of the parison. Accordingly, a cross-sectional view of the parison may exhibit areas of differing wall thickness. Suitable materials for the parison include many of the materials discussed above with respect to layers **41** and **42**. Following placement of the parison between the mold portions, the mold portions close upon the parison and pressurized air within the parison induces the liquefied elastomeric material to contact the surfaces of the mold. In addition, closing of the mold portions and the introduction of pressurized air induces the liquefied elastomeric material to contact the surfaces of the mold portions. Air may also be evacuated from the area between the parison and the mold portions to further facilitate molding and bonding. Accordingly, layers **41** and **42** may also be formed through a blowmolding process. As a further alternative, a conventional rotational molding process may be utilized to form layers **41** and **42**.

Once the molding process is complete, the inflation and bonding process may be utilized to inflate subchambers **43** and form interior bonds **46**. A inflate-bond tool **60** is depicted in FIG. **14** as having a first portion **61** and a second portion **62**. Portions **61** and **62** cooperatively define an internal cavity having the general shape of chamber **40**. More particularly, portions **61** and **62** each (a) form various indentations **63** that correspond in location and size with subchambers **43** and (b) define a interior ridges **64** that extend around indentations **63** and correspond in location with interior bonds **46**. Additionally, at least portion **62** includes an inflation connector **65** that interfaces with channel **47**. In other configurations, portions **61** and **62** may cooperatively define two internal cavities, one having the configuration of chamber **40**, which is suitable for footwear **10** when configured for the right foot of the wearer, and the other having the configuration of a mirror image of chamber **40**, which is suitable for footwear **10** when configured for the left foot of the wearer.

The manner in which inflate-bond tool **60** is utilized to continue forming chamber **40** will now be discussed in greater detail. Initially, the molded structure formed from layers **41** and **42** using molding tool **50** is positioned between portions **61** and **62**, as depicted in FIGS. **15**A and **16**A. Additionally, an end of channel **47** is joined with inflation connector **65**. At this stage of the process, layers **41** and **42** are generally molded to define semi-circular protrusions corresponding with subchambers **43**. Layers **41** and **42** are also bonded together to form peripheral bond **45**, and channel **47** provides a fluid inlet to the area between layers **41** and **42**.

Once the molded layers **41** and **42** are positioned between portions **61** and **62**, portions **61** and **62** translate toward each other such that layers **41** and **42** enter the internal cavity within inflate-bond tool **60**, as depicted in FIGS. **15**B and **16**B. As inflate-bond tool **60** contacts and envelops the molded structure formed from layers **41** and **42**, a fluid (e.g., a pressurized fluid or a fluid at ambient pressure) is injected through inflation connector **65** and into channel **47**. The fluid then passes into the area between layers **41** and **42** that forms chamber **40**. As the area between layers **41** and **42** is pressurized, radio frequency bonding may be utilized to form interior bonds **46**. In other words, radio frequency energy that causes layers **41** and **42** to heat and bond may pass through inflate-bond tool **60**, particularly at interior ridges **64**. Given that layers **41** and **42** may be formed from a thermoplastic polymer material, the increased temperature causes the polymer material to melt or soften, thereby inducing bonding between layers **41** and **42**. That is, the radio frequency energy passes

through layers **41** and **42** at interior ridges **64** and causes layers **41** and **42** to bond with each other in areas corresponding with interior bonds **46**.

As noted above, the inflation and bonding process involves inflating subchambers **43** and bonding layers **41** and **42** to form interior bonds **46**. While positioned within inflate-bond tool **60**, fluid is first injected into the area between layers **41** and **42** through inflation connector **65** and channel **47**. Injecting the fluid effectively pressurizes the areas corresponding with subchambers **43**. Once properly pressurized, the radio frequency energy forms interior bonds **46**, thereby sealing the pressurized fluid within subchambers **43**. Some of the pressurized fluid may also remain in web area **44**, which causes layers **41** and **42** to bow outward slightly. In some configurations, however, the pressurized fluid may be allowed to exit web area **44**. In other configurations of inflate-bond tool **60**, conductive heating, adhesive joining, or other bonding techniques may be utilized to form interior bonds **46**.

Once inflation and bonding are complete, portions **61** and **62** separate such that chamber **40** and other portions of layers **41** and **42** may be removed from inflate-bond tool **60**, as depicted in FIGS. **15**C and **16**C. After proper cooling, the excess portions of layers **41** and **42** may be trimmed at peripheral bond **45** and recycled, thereby substantially completing the manufacture of chamber **40**.

The procedures discussed above impart a configuration wherein each of subchambers **43** are pressurized to substantially the same pressure. Various techniques may be utilized, however, to pressurize subchambers **43** differently. Referring to FIG. **17**, inflate-bond tool **60** has a configuration wherein the centrally-located indentations **63** are truncated or otherwise not large enough to accommodate the semi-circular protrusions in layers **41** and **42**, whereas the peripherally-located indentations **63** have the same shape as the protrusions in layers **41** and **42**. When layers **41** and **42** enter inflate-bond tool **60**, the truncated indentations **63** compress the protrusions to reduce the volume in the centrally-located subchamber **43**. Once pressurized and removed from inflate-bond tool **60**, the pressure in the centrally-located subchamber **43** will be less than the pressure within other subchambers **43**. Accordingly, the pressure of subchambers **43** may be controlled or otherwise modified by decreasing the volume of indentations **63** in inflate-bond tool **60**.

Another method of varying the pressures within subchambers **63** is to utilize a two-stage bonding process. For example, the area between layers **41** and **42** may be pressurized to a first pressure and then some of interior bonds **46** are formed. The area between layers **41** and **42** may then be pressurized to a second pressure and the remainder of interior bonds **46** are formed. In this manner, some of subchambers **43** will be pressurized to the first pressure and some will be pressurized to the second pressure. Two inflate-bond tools **60** may be utilized in a two-stage bonding process to form the various interior bonds **46**, but a single inflate-bond tool **60** that selectively forms interior bonds **46** may also be utilized.

The invention is disclosed above and in the accompanying figures with reference to a variety of configurations. The purpose served by the disclosure, however, is to provide an example of the various features and concepts related to the invention, not to limit the scope of the invention. One skilled in the relevant art will recognize that numerous variations and modifications may be made to the configurations described above without departing from the scope of the present invention, as defined by the appended claims.

The invention claimed is:

1. A method for manufacturing a fluid-filled chamber comprising:

molding a first polymer sheet and a second polymer sheet to form molded regions respectively defining a plurality of protrusions and unmolded regions that are substantially parallel to one another;

forming a first bond between the first polymer sheet and the second polymer sheet, the first bond extending around a periphery of the chamber;

injecting, after the step of forming the first bond, a fluid between the first polymer sheet and the second polymer sheet, the fluid entering the protrusions in the first polymer sheet and the second polymer sheet; and

forming, after the step of injecting, a plurality of second bonds between the first polymer sheet and the second polymer sheet in the unmolded regions to form a web area located between the protrusions, the second bonds extending around each of the protrusions to seal and pressurized the fluid within the protrusions in a single step, wherein the first and second sheets remain unbonded to each other in portions of the unmolded regions between the protrusions after formation of the second bonds.

2. The method recited in claim **1**, wherein a thickness of the chamber in the unmolded regions is less than a thickness of the chamber at the protrusions.

3. The method recited in claim **1**, wherein the step of injecting includes pressurizing the fluid.

4. The method recited in claim **1**, wherein the step of forming the first bond includes heating the first polymer sheet and the second polymer sheet through one of conduction and radiative heaters, and the step of forming the plurality of second bonds includes heating the first polymer sheet and the second polymer sheet with radio frequency energy.

5. The method of claim **1**, wherein the web area defined by the molding generally lays parallel to a plane of the chamber.

6. The method of claim **1**, further comprising externally compressing one of the protrusions to reduce its volume during the forming of a plurality of second bonds.

7. The method of claim **1**, wherein the injecting of the fluid causes a portion of the first polymer sheet in the web area to separate from the second polymer sheet.

8. The method of claim **1**, wherein

the step of molding step and the step of forming the first bond are performed using a molding tool;

the step of forming the plurality of second bonds is performed using a bonding tool; and

the molding tool is separate from the bonding tool.

9. A method for manufacturing a fluid-filled chamber comprising:

shaping a pair of polymer sheets to form molded regions respectively defining a plurality of subchambers and an unmolded web area between the subchambers having first substantially flat portions of the first polymer sheet opposing second substantially flat portions of the second polymer sheet;

a first bonding of the polymer sheets together to define a periphery of the fluid-filled chamber;

pressurizing the subchambers with a fluid after the first bonding; and

a second bonding, after the pressurizing of the subchambers with the fluid of the polymer sheets together around at least a portion of the subchambers in an area of the unmolded web area to seal the fluid within the subchambers, wherein the first and second sheet remain unbonded to each other in portions of the unmolded web area between the subchambers after the second bonding.

10. The method recited in claim **9**, further comprising heating the polymer sheets through one of conduction and radiative heaters during the shaping step; and

heating the polymer sheets with radio frequency energy during the pressurizing and bonding steps.

11. The method of claim **9**, further comprising externally compressing one of the subchambers to reduce its volume during the bonding of the polymer sheets together around at least the first portion of the subchambers.

12. The method of claim **9**, wherein the pressurizing causes a portion of the pair of polymer sheets in the web area to separate from each other.

13. The method of claim **9**, wherein the thickness of a subchamber is between three to ten times the thickness of the web area.

14. The method of claim **9**, wherein the thickness of a subchamber is greater than ten times the thickness of the web area.

15. The method of claim **9**, further comprising:

a first translating of a first portion of a molding tool and a second portion of the molding tool toward each other to perform the first bonding;

a second translating of a first portion of a bonding tool and a second portion of the bonding tool toward each other to perform the second bonding;

positioning the first polymer sheet and the second polymer sheet between the first portion of the molding tool and the second portion of the first molding tool prior to the first translating;

removing the chamber from the molding tool prior to the second translating; and

positioning the chamber between the first portion of the bonding tool and the second portion of the bonding tool prior to the second translating.

16. A method for manufacturing a fluid-filled chamber comprising:

molding a first polymer sheet and a second polymer sheet to form molded regions respectively defining a plurality of hemispherical protrusions and an unmolded region defining a web area between the protrusions;

forming a first bond between the first polymer sheet and the second polymer sheet, the first bond extending around a periphery of the chamber, with the first polymer sheet and the second polymer sheet remaining unbonded around at least one of the protrusions;

injecting a fluid, after the forming of the first bond, between the first polymer sheet and the second polymer sheet, the fluid entering the protrusions in the first polymer sheet, the protrusions in the second polymer sheet, and the web area between the first polymer sheet and the second polymer sheet; and

forming a plurality of second bonds in the web area, after the injecting of the fluid, between the first polymer sheet and the second polymer sheet, the second bonds extending around each of the protrusions to seal and pressurize the fluid within the protrusions in a single step, wherein in portions of the web area between the second bonds the first polymer sheet and the second polymer sheet remain unbonded after formation of the second bonds.

17. The method of claim **16**, wherein the thickness of a subchamber is between three to ten times the thickness of the web area.

18. The method of claim **16**, wherein the thickness of a subchamber is greater than ten times the thickness of the web area.

19. The method of claim **16**, wherein:

the forming the first bond includes a first movement of a first portion of a molding tool and a second portion of the molding tool toward each other; and

the forming the plurality of second bonds includes a second movement, separate from the first movement, of a first portion of a inflate-bonding tool and a second portion of the inflate-bonding tool toward each other.

* * * * *