US009270538B2

(12) **United States Patent**
Takita et al.

(10) **Patent No.: US 9,270,538 B2**
(45) **Date of Patent: Feb. 23, 2016**

(54) **NETWORK DESIGN APPARATUS AND NETWORK DESIGN METHOD**

(71) Applicant: **FUJITSU LIMITED**, Kawasaki-shi, Kanagawa (JP)

(72) Inventors: **Yutaka Takita**, Kawasaki (JP); **Tomohiro Hashiguchi**, Inagi (JP); **Kazuyuki Tajima**, Yokosuka (JP)

(73) Assignee: **FUJITSU LIMITED**, Kawasaki (JP)

(*) Notice: Subject to any disclaimer, the term of this patent is extended or adjusted under 35 U.S.C. 154(b) by 178 days.

(21) Appl. No.: **14/230,820**

(22) Filed: **Mar. 31, 2014**

(65) **Prior Publication Data**

US 2014/0344433 A1 Nov. 20, 2014

(30) **Foreign Application Priority Data**

May 17, 2013 (JP) 2013-105574

(51) **Int. Cl.**
G06F 15/16 (2006.01)
H04L 12/24 (2006.01)
H04J 14/02 (2006.01)

(52) **U.S. Cl.**
CPC ***H04L 41/145*** (2013.01); ***H04L 41/0896*** (2013.01); *H04J 14/02* (2013.01)

(58) **Field of Classification Search**
CPC H04L 41/145; H04L 41/0896; H04J 14/02
USPC 709/227
See application file for complete search history.

(56) **References Cited**

U.S. PATENT DOCUMENTS

8,260,573 B2 * 9/2012 Saadatpoor E21B 47/10 702/182
2007/0022416 A1 * 1/2007 Masuda G06F 9/5016 717/151

FOREIGN PATENT DOCUMENTS

JP 2012-199644 10/2012

* cited by examiner

Primary Examiner — Phuoc Nguyen
(74) *Attorney, Agent, or Firm* — Fujitsu Patent Center

(57) **ABSTRACT**

A network design apparatus includes: a memory; and a processor coupled to the memory. The processor executes a process including: calculating an allocation pattern not requiring cancellation of a connection request from among a plurality of allocation candidates, when the connection request transmitted/received between nodes on a network is to be allocated to a slot that constructs a link on the network; determining a change procedure of the connection request in order to change an allocation pattern provided before the network is re-optimized to the allocation pattern calculated at the calculating; and outputting the allocation pattern calculated at the calculating as an allocation pattern after the network is re-optimized, along with the change procedure determined at the determining.

6 Claims, 24 Drawing Sheets

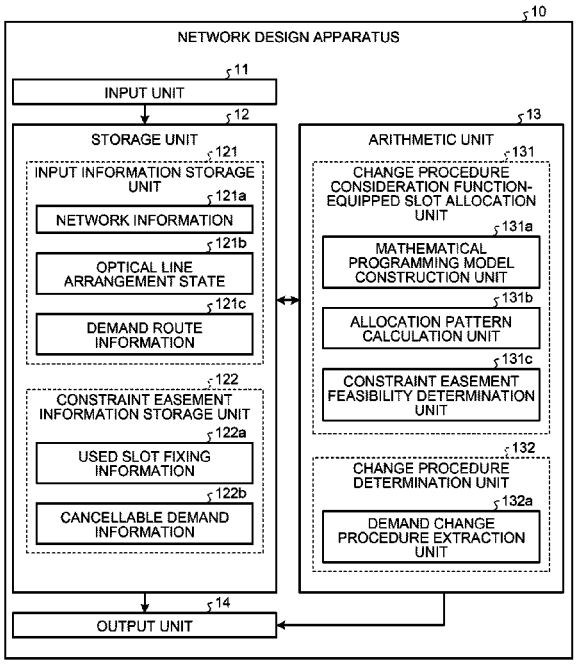

FIG.1

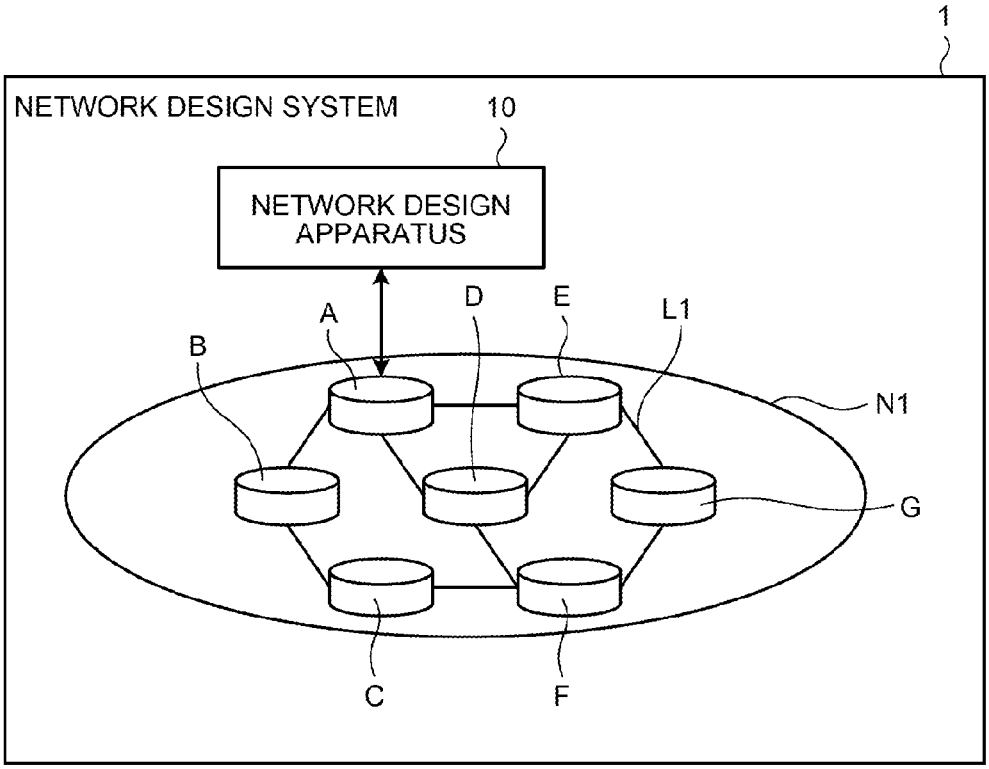
1
NETWORK DESIGN SYSTEM
10
NETWORK DESIGN APPARATUS
A
D
E
L1
B
N1
G
C
F

FIG.2

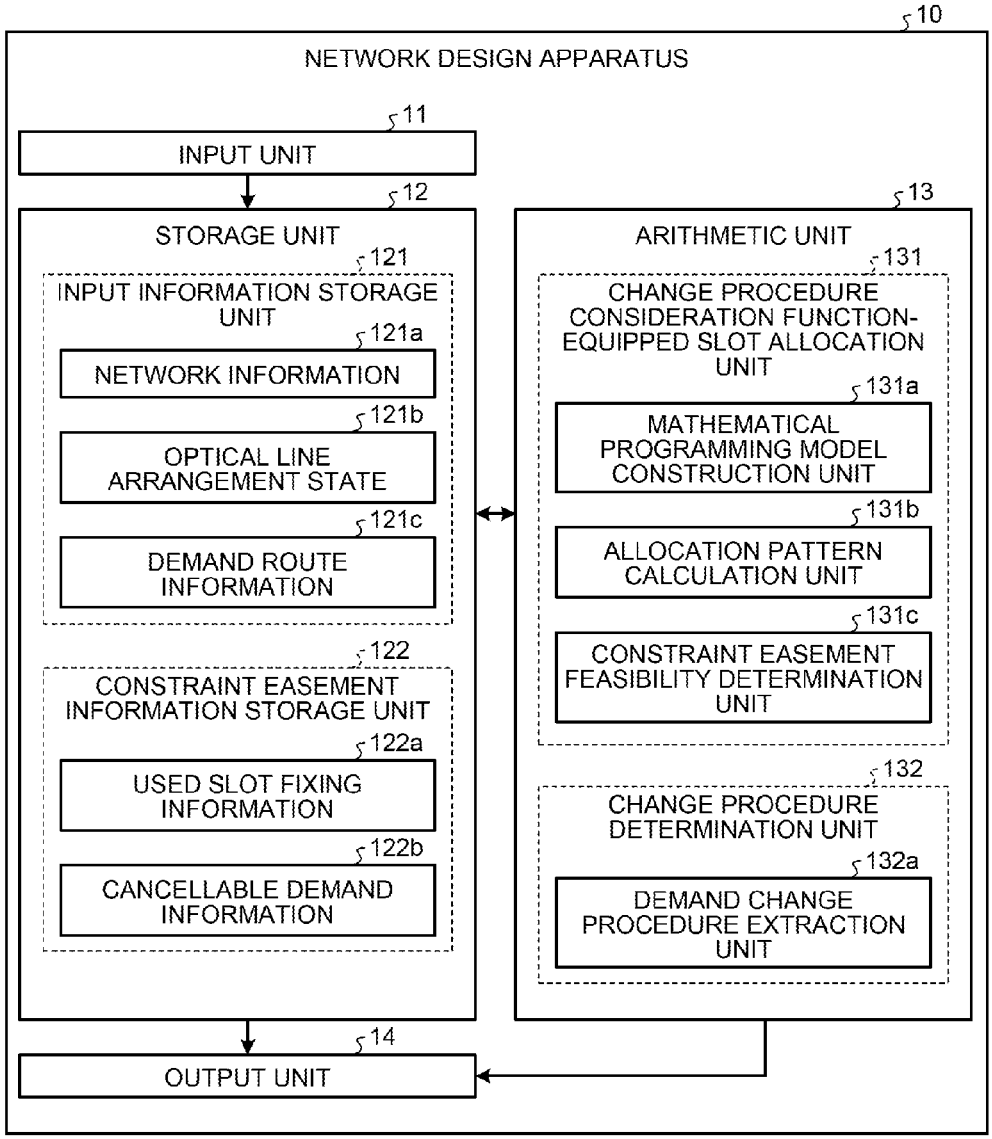
10
NETWORK DESIGN APPARATUS
11
INPUT UNIT
12
STORAGE UNIT
121
INPUT INFORMATION STORAGE UNIT
121a
NETWORK INFORMATION
121b
OPTICAL LINE ARRANGEMENT STATE
121c
DEMAND ROUTE INFORMATION
122
CONSTRAINT EASEMENT INFORMATION STORAGE UNIT
122a
USED SLOT FIXING INFORMATION
122b
CANCELLABLE DEMAND INFORMATION
13
ARITHMETIC UNIT
131
CHANGE PROCEDURE CONSIDERATION FUNCTION-EQUIPPED SLOT ALLOCATION UNIT
131a
MATHEMATICAL PROGRAMMING MODEL CONSTRUCTION UNIT
131b
ALLOCATION PATTERN CALCULATION UNIT
131c
CONSTRAINT EASEMENT FEASIBILITY DETERMINATION UNIT
132
CHANGE PROCEDURE DETERMINATION UNIT
132a
DEMAND CHANGE PROCEDURE EXTRACTION UNIT
14
OUTPUT UNIT

FIG.3

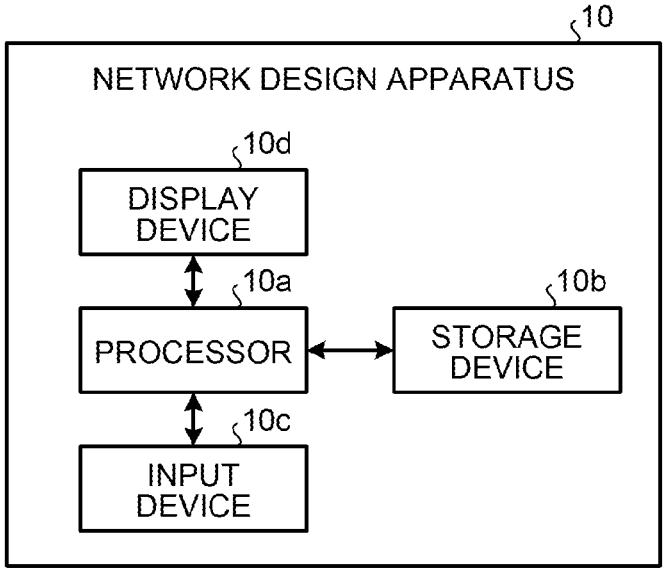
10
NETWORK DESIGN APPARATUS
10d
DISPLAY DEVICE
10a
PROCESSOR
10b
STORAGE DEVICE
10c
INPUT DEVICE

FIG.4A

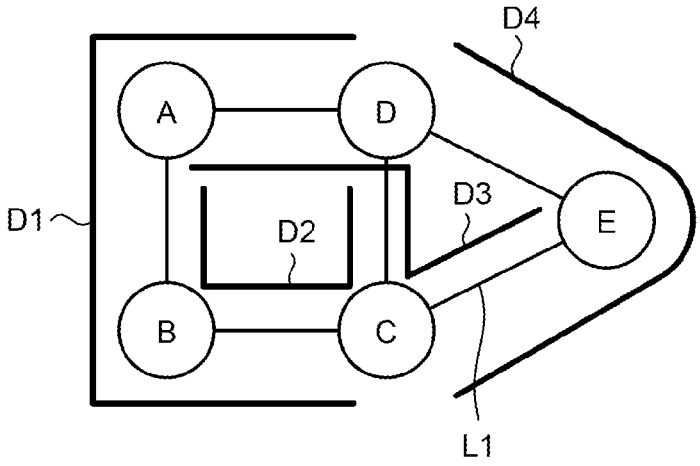

FIG.4B

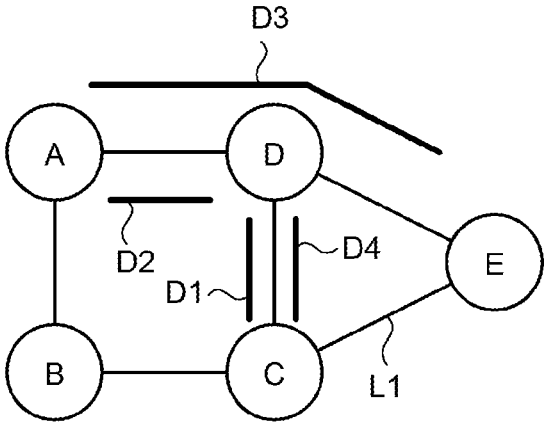

FIG.5

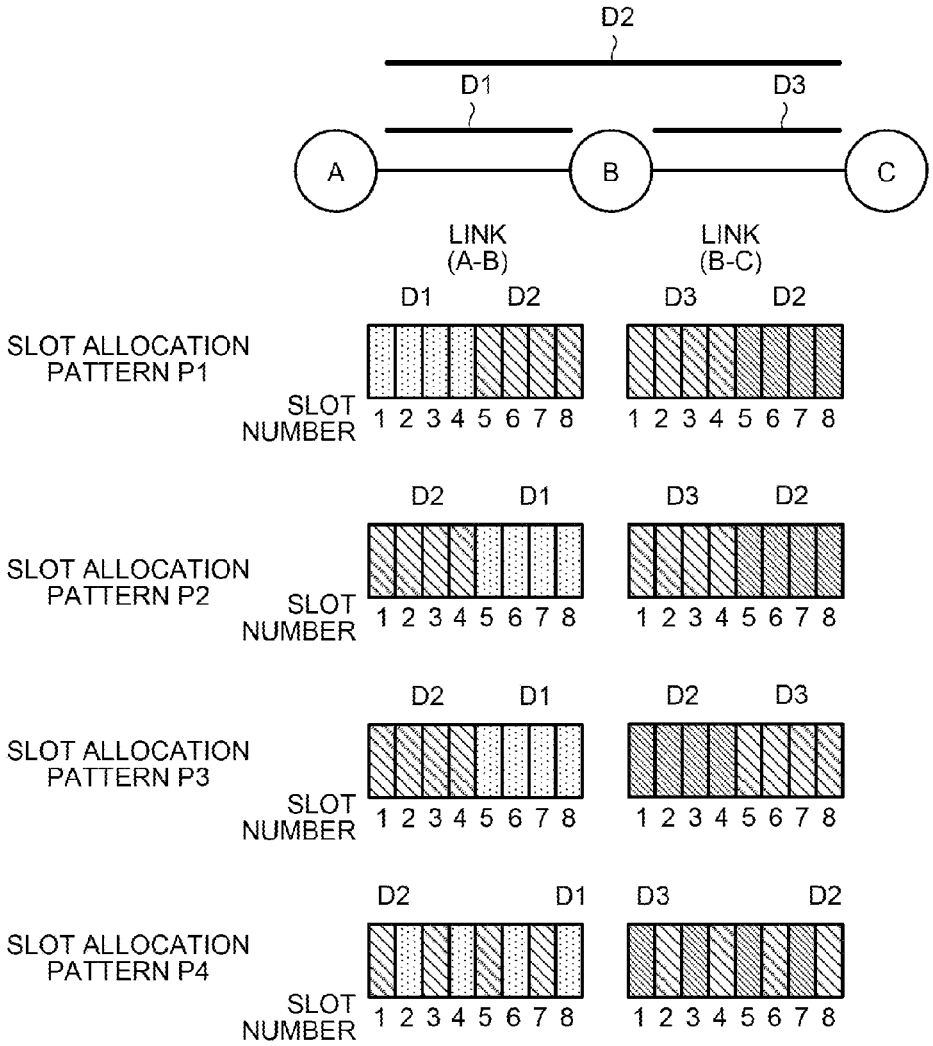
D2
D1
D3
A
B
C
LINK (A-B)
LINK (B-C)
SLOT ALLOCATION PATTERN P1
D1 D2
D3 D2
SLOT NUMBER
1 2 3 4 5 6 7 8
1 2 3 4 5 6 7 8
SLOT ALLOCATION PATTERN P2
D2 D1
D3 D2
SLOT NUMBER
1 2 3 4 5 6 7 8
1 2 3 4 5 6 7 8
SLOT ALLOCATION PATTERN P3
D2 D1
D2 D3
SLOT NUMBER
1 2 3 4 5 6 7 8
1 2 3 4 5 6 7 8
SLOT ALLOCATION PATTERN P4
D2 D1
D3 D2
SLOT NUMBER
1 2 3 4 5 6 7 8
1 2 3 4 5 6 7 8

FIG.6A

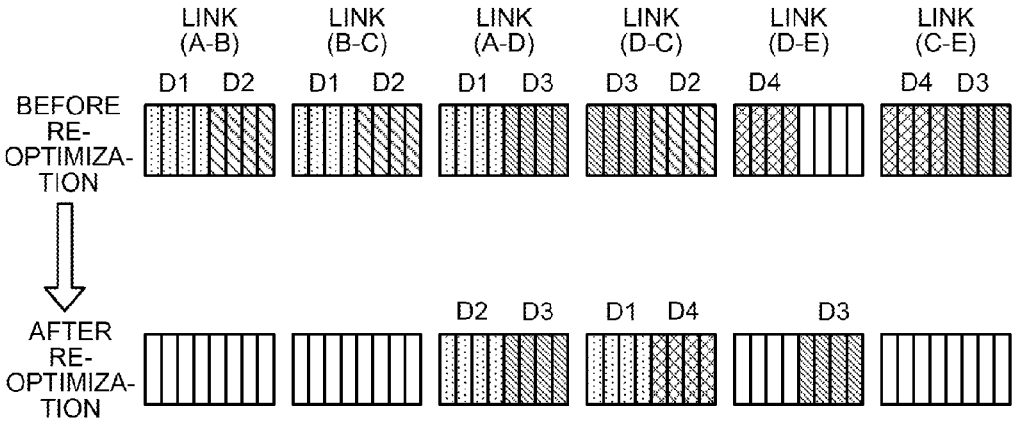
LINK (A-B)
LINK (B-C)
LINK (A-D)
LINK (D-C)
LINK (D-E)
LINK (C-E)
D1 D2
D1 D2
D1 D3
D3 D2
D4
D4 D3
BEFORE RE-OPTIMIZA-TION
AFTER RE-OPTIMIZA-TION
D2 D3
D1 D4
D3

FIG.6B

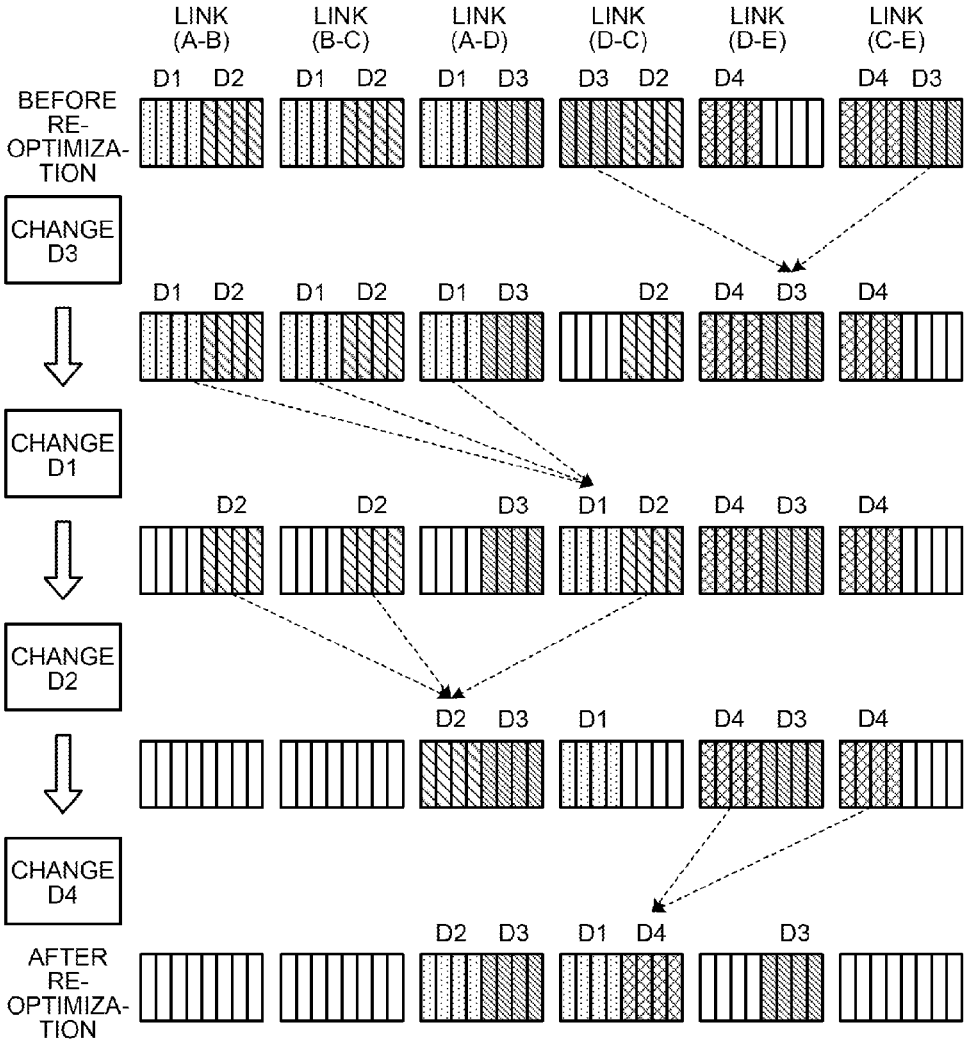
LINK (A-B)
LINK (B-C)
LINK (A-D)
LINK (D-C)
LINK (D-E)
LINK (C-E)
BEFORE RE-OPTIMIZA-TION
D1 D2
D1 D2
D1 D3
D3 D2
D4
D4 D3
CHANGE D3
D1 D2
D1 D2
D1 D3
D2
D4 D3
D4
CHANGE D1
D2
D2
D3
D1 D2
D4 D3
D4
CHANGE D2
D2 D3
D1
D4 D3
D4
CHANGE D4
D2 D3
D1 D4
D3
AFTER RE-OPTIMIZA-TION

FIG.7A

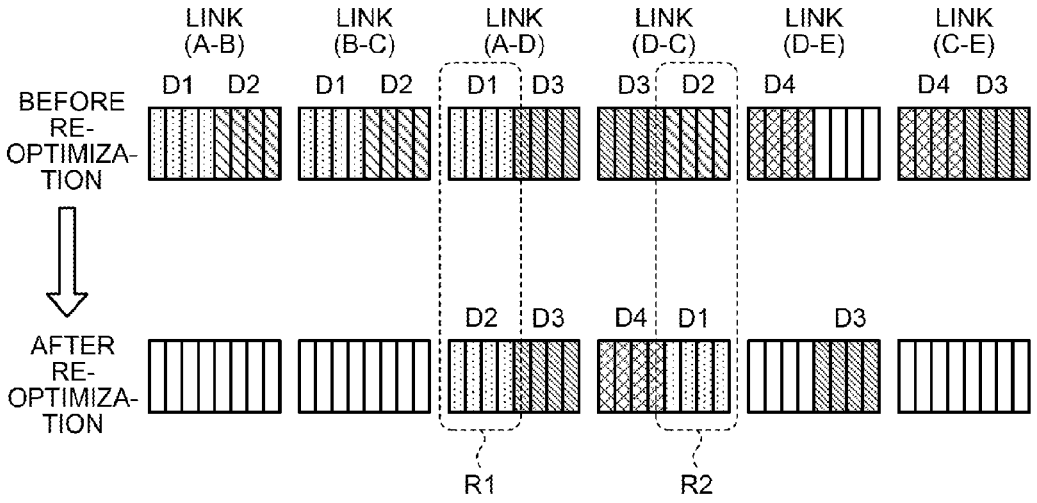
LINK (A-B)
LINK (B-C)
LINK (A-D)
LINK (D-C)
LINK (D-E)
LINK (C-E)
D1 D2
D1 D2
D1 D3
D3 D2
D4
D4 D3
BEFORE RE-OPTIMIZA-TION
D2 D3
D4 D1
D3
AFTER RE-OPTIMIZA-TION
R1
R2

FIG.7B

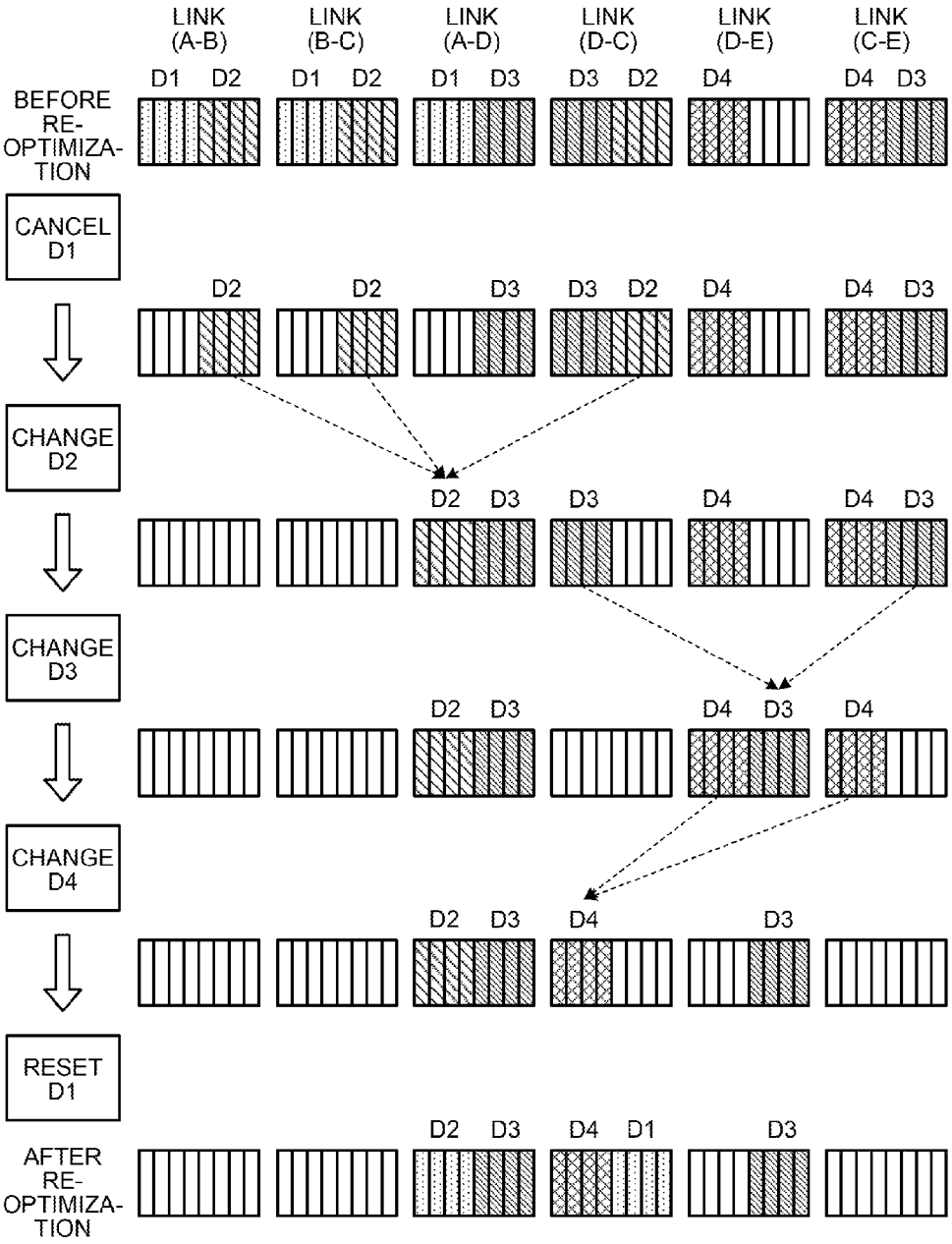
LINK (A-B)
LINK (B-C)
LINK (A-D)
LINK (D-C)
LINK (D-E)
LINK (C-E)
BEFORE RE-OPTIMIZA-TION
D1 D2
D1 D2
D1 D3
D3 D2
D4
D4 D3
CANCEL D1
D2
D2
D3
D3 D2
D4
D4 D3
CHANGE D2
D2 D3
D3
D4
D4 D3
CHANGE D3
D2 D3
D4 D3
D4
CHANGE D4
D2 D3
D4
D3
RESET D1
D2 D3
D4 D1
D3
AFTER RE-OPTIMIZA-TION

FIG.8

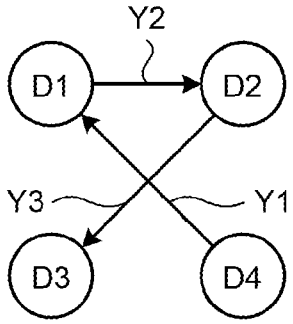

FIG.9A

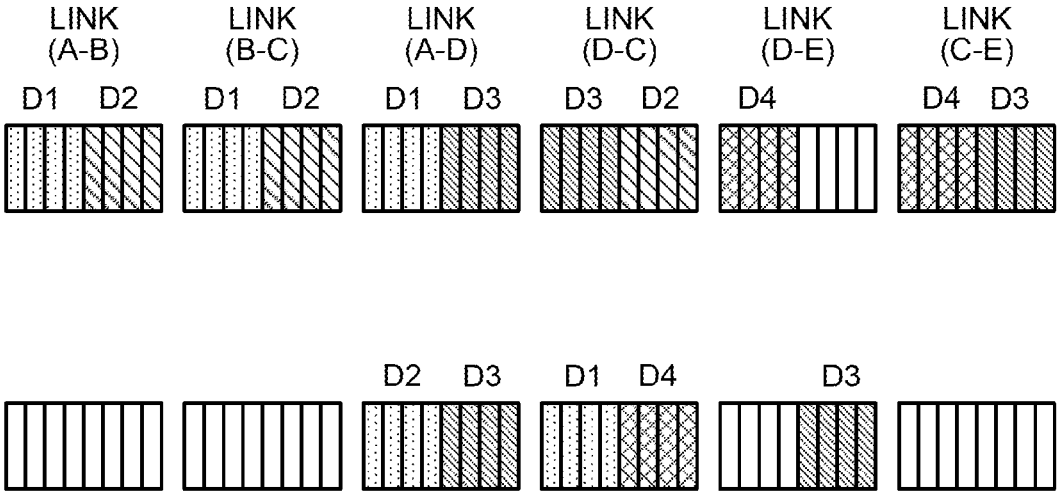
LINK (A-B)
D1 D2
LINK (B-C)
D1 D2
LINK (A-D)
D1 D3
LINK (D-C)
D3 D2
LINK (D-E)
D4
LINK (C-E)
D4 D3
D2 D3
D1 D4
D3

FIG.9B

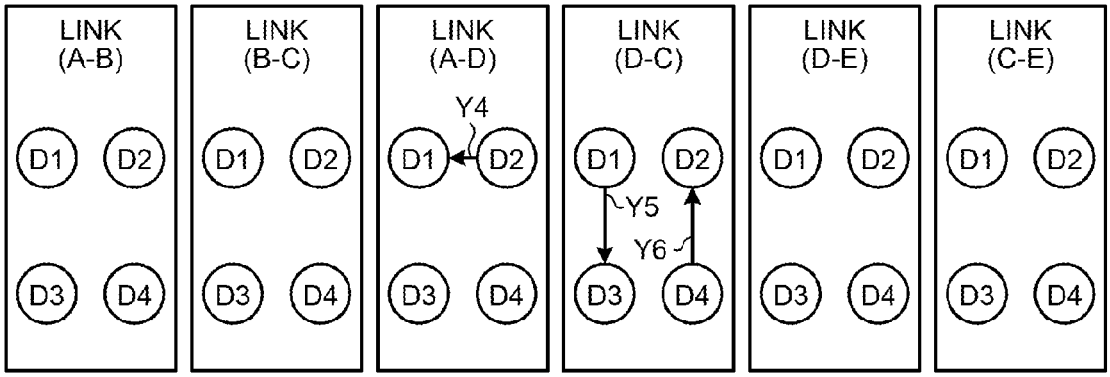
LINK (A-B)
D1
D2
D3
D4
LINK (B-C)
D1
D2
D3
D4
LINK (A-D)
Y4
D1
D2
D3
D4
LINK (D-C)
D1
D2
Y5
Y6
D3
D4
LINK (D-E)
D1
D2
D3
D4
LINK (C-E)
D1
D2
D3
D4

FIG.9C

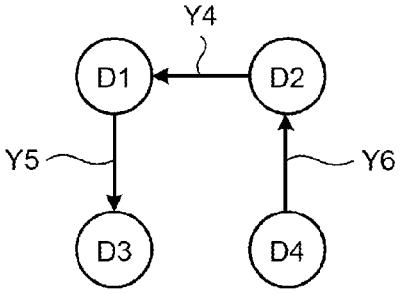
Y4
D1
D2
Y5
Y6
D3
D4

FIG.10A

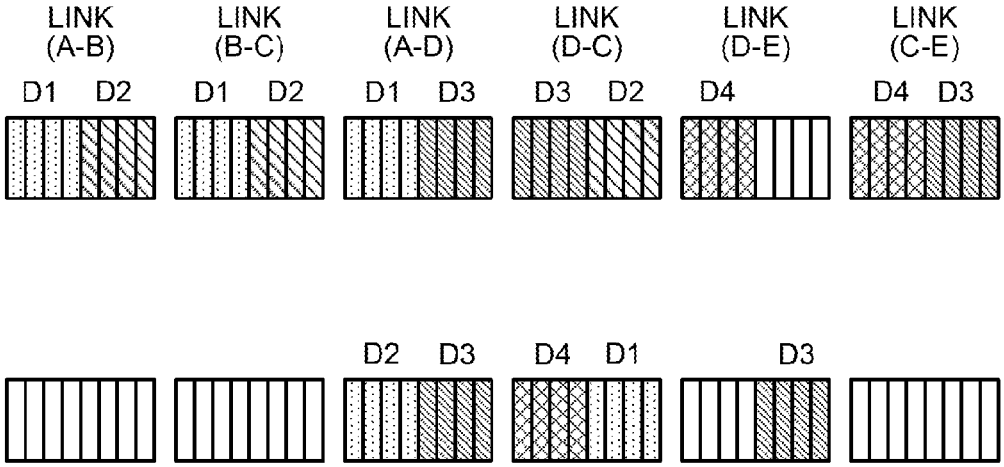
LINK (A-B)
D1 D2
LINK (B-C)
D1 D2
LINK (A-D)
D1 D3
LINK (D-C)
D3 D2
LINK (D-E)
D4
LINK (C-E)
D4 D3
D2 D3
D4 D1
D3

FIG.10B

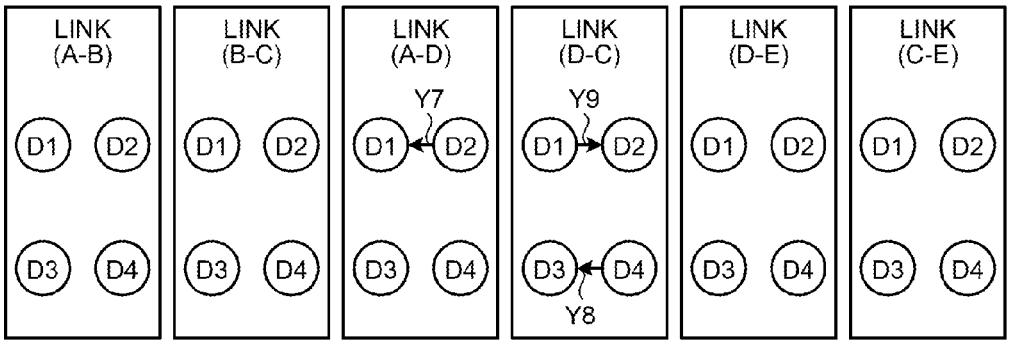

FIG.10C

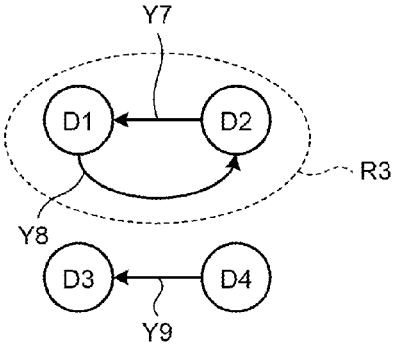

FIG.11

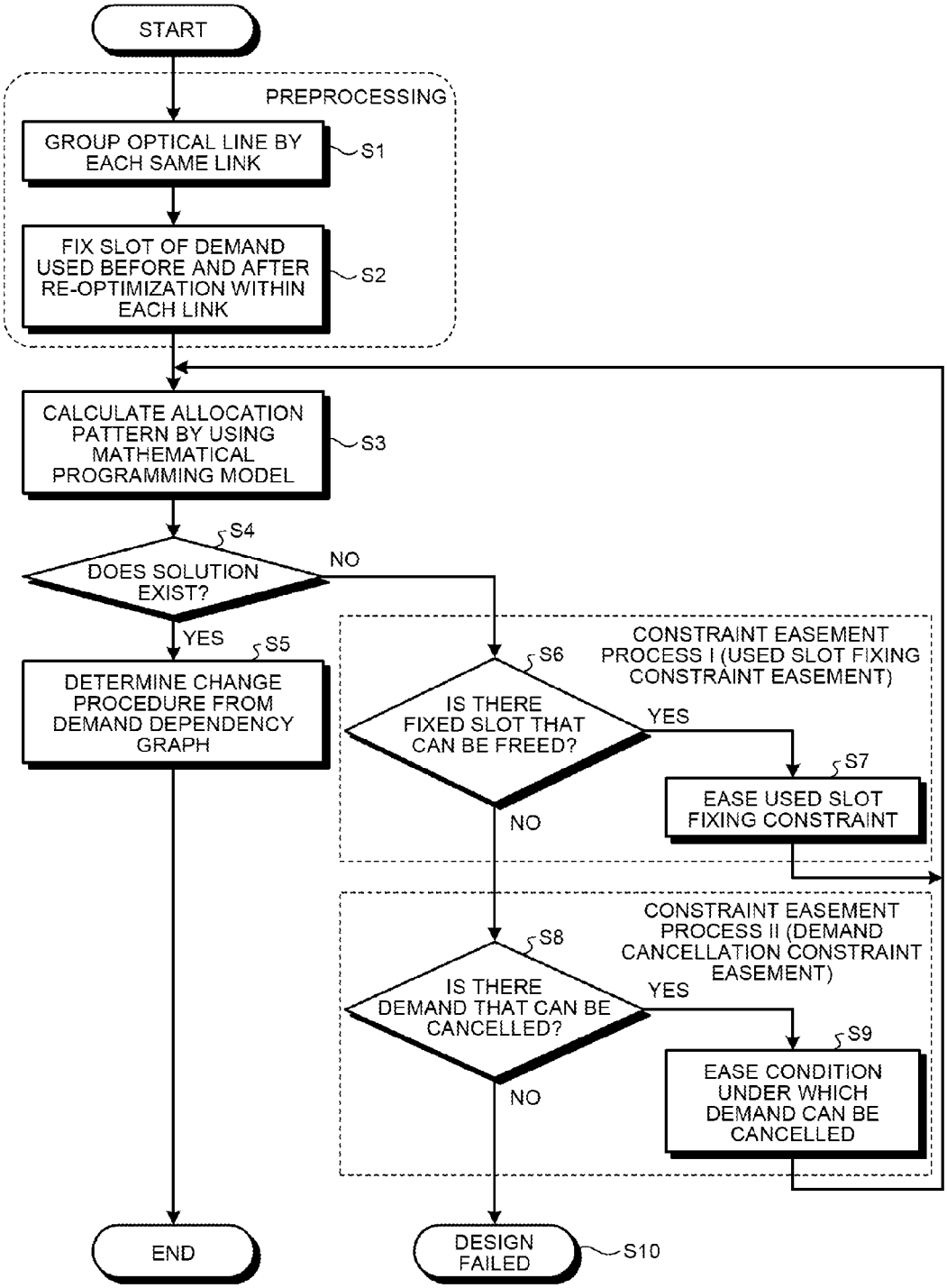
START
PREPROCESSING
GROUP OPTICAL LINE BY EACH SAME LINK
S1
FIX SLOT OF DEMAND USED BEFORE AND AFTER RE-OPTIMIZATION WITHIN EACH LINK
S2
CALCULATE ALLOCATION PATTERN BY USING MATHEMATICAL PROGRAMMING MODEL
S3
S4
DOES SOLUTION EXIST?
NO
YES
S5
DETERMINE CHANGE PROCEDURE FROM DEMAND DEPENDENCY GRAPH
CONSTRAINT EASEMENT PROCESS I (USED SLOT FIXING CONSTRAINT EASEMENT)
S6
IS THERE FIXED SLOT THAT CAN BE FREED?
YES
S7
EASE USED SLOT FIXING CONSTRAINT
NO
CONSTRAINT EASEMENT PROCESS II (DEMAND CANCELLATION CONSTRAINT EASEMENT)
S8
IS THERE DEMAND THAT CAN BE CANCELLED?
YES
S9
EASE CONDITION UNDER WHICH DEMAND CAN BE CANCELLED
NO
END
DESIGN FAILED
S10

FIG.12

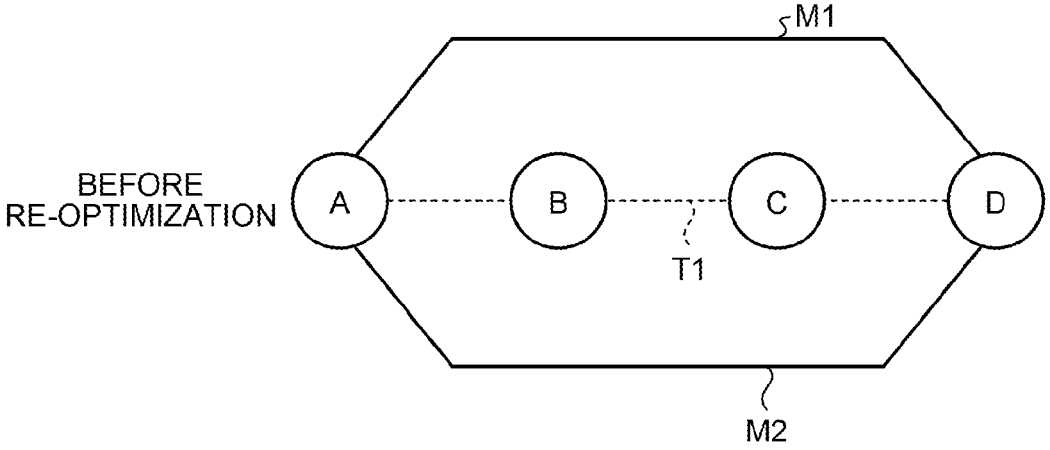

FIG.13A

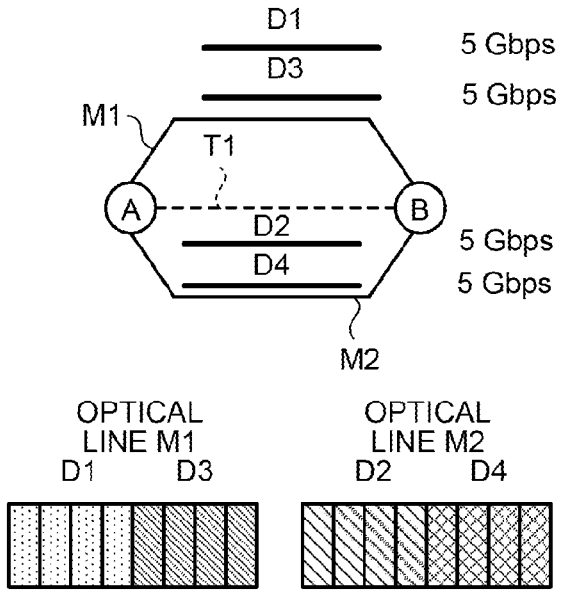

FIG.13B

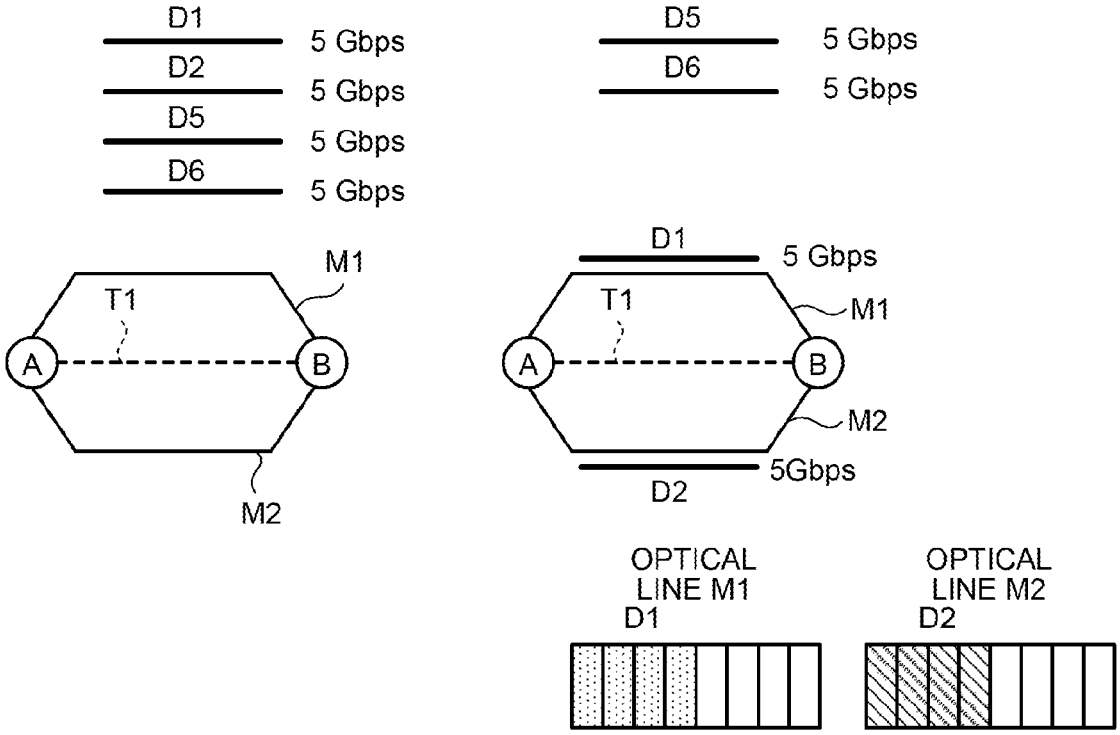

FIG.14A

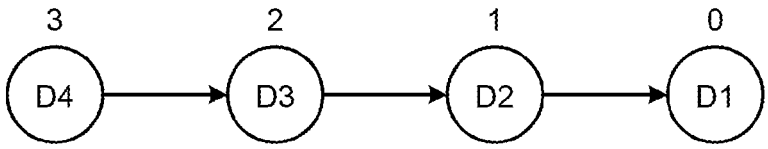

FIG.14B

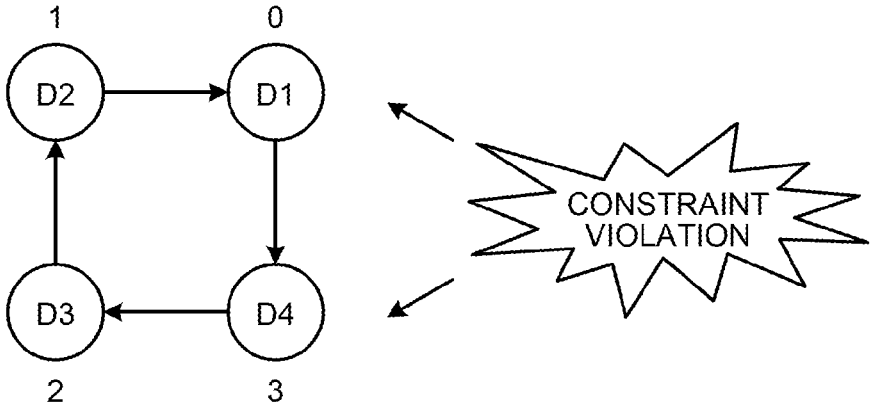

FIG.15

No.	NAME	TYPE	DESCRIPTION
1	cd	(Object)	Demand (current Demand) BEFORE Re-Grooming
2	rd	(Object)	Demand (reoptimized Demand) AFTER Re-Grooming
3	hr	(Object)	OPTICAL PATH ROUTE (SYNONYMOUS WITH HOODY Route) AFTER Re-Grooming
4	h	(Object)	OPTICAL PATH AFTER Re-Grooming
5	RepUsedSlot (cd, rd, h)	Integer variable	NUMBER OF SLOTS IN OPTICAL PATH h WHERE PORTION OCCUPIED BY current Demand cd IS REPLACED BY Reoptimized Demand rd
6	IsRepOccur (cd, rd)	0/1 variable	IDENTIFIER OF WHETHER OR NOT THERE IS CASE WHERE Current Demand cd IS REPLACED BY ReOptimized Demand rd (Replace: Rep) (YES: 1, NO: 0)
7	NewUsedSlot (rd, h)	Integer variable	NUMBER OF SLOTS IN OPTICAL PATH h THAT IS NOT USED IN OLD Demand BUT USED FOR FIRST TIME IN NEW Demand nd
8	AHC (rd)	Integer variable	VARIABLE IS INCAPABLE OF BEING COUNTED WHEN Acyclic Hop Count: Loop EXISTS
9	IsDisrupted (cd)	0/1 variable	Current Demand PERFORMING Disrupt
10	RepUsedHOODU (h, rd)	0/1 variable	VARIABLE INDICATING WHICH HOODU IS USED IN ReOptimized CONFIGURATION BY Re-Grooming Demand: rd
11	RemainCHOODU (ch)	0/1 variable	VARIABLE INDICATING WHICH HOODU IS USED IN ReOptimized AMONG CHOODU CANDIDATES
12	TotalSlot (cd, h)	Const	NUMBER OF Slot OCCUPIED BY Current Demand cd ON OPTICAL PATH h
13	TotalSlot (rd, h)	Const	NUMBER OF Slot OCCUPIED BY Reoptimized Demand rd ON OPTICAL PATH h
14	NewTS (h)	Const	NUMBER OF Slot THAT CAN BE NEWLY USED ON OPTICAL PATH h
15	M	Const	LARGE NUMBER

FIG.16A

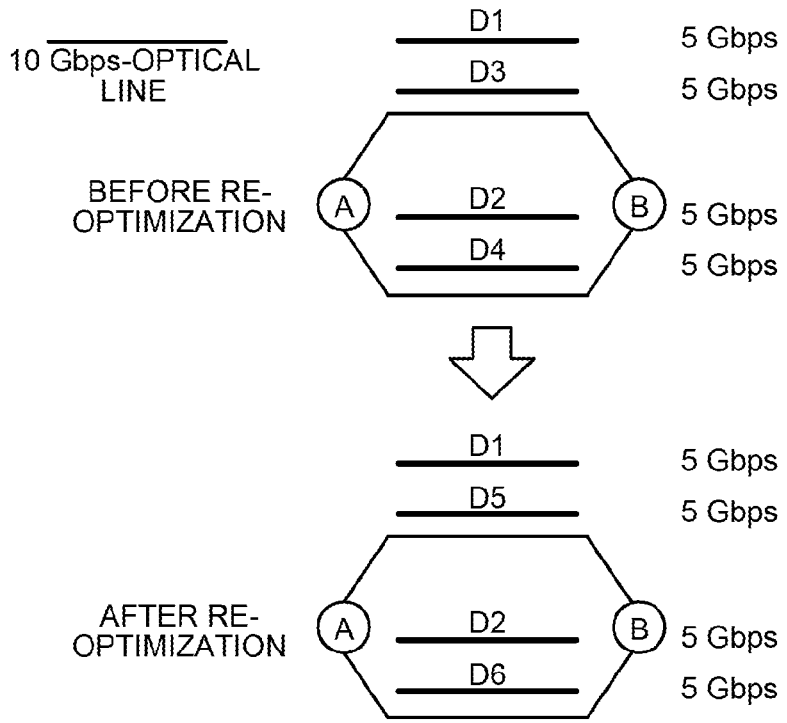

FIG.16B

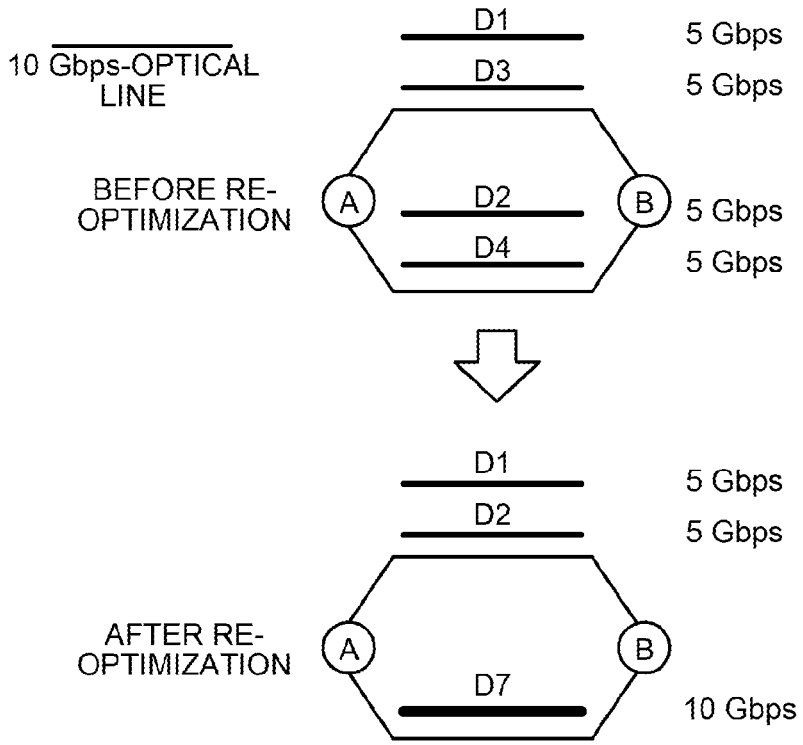

FIG.17

123

DEMAND TYPE NUMBER	W/P	STATUS	PRIORITY
1	Work (CURRENTLY USED)	TEMPORARY CANCELLATION NOT ALLOWED	◎
2	Work (CURRENTLY USED)	TEMPORARY CANCELLATION ALLOWED	○
3	Protection (RESERVED)	TEMPORARY CANCELLATION ALLOWED	△

FIG.18A

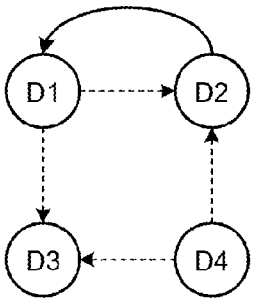

FIG.18B

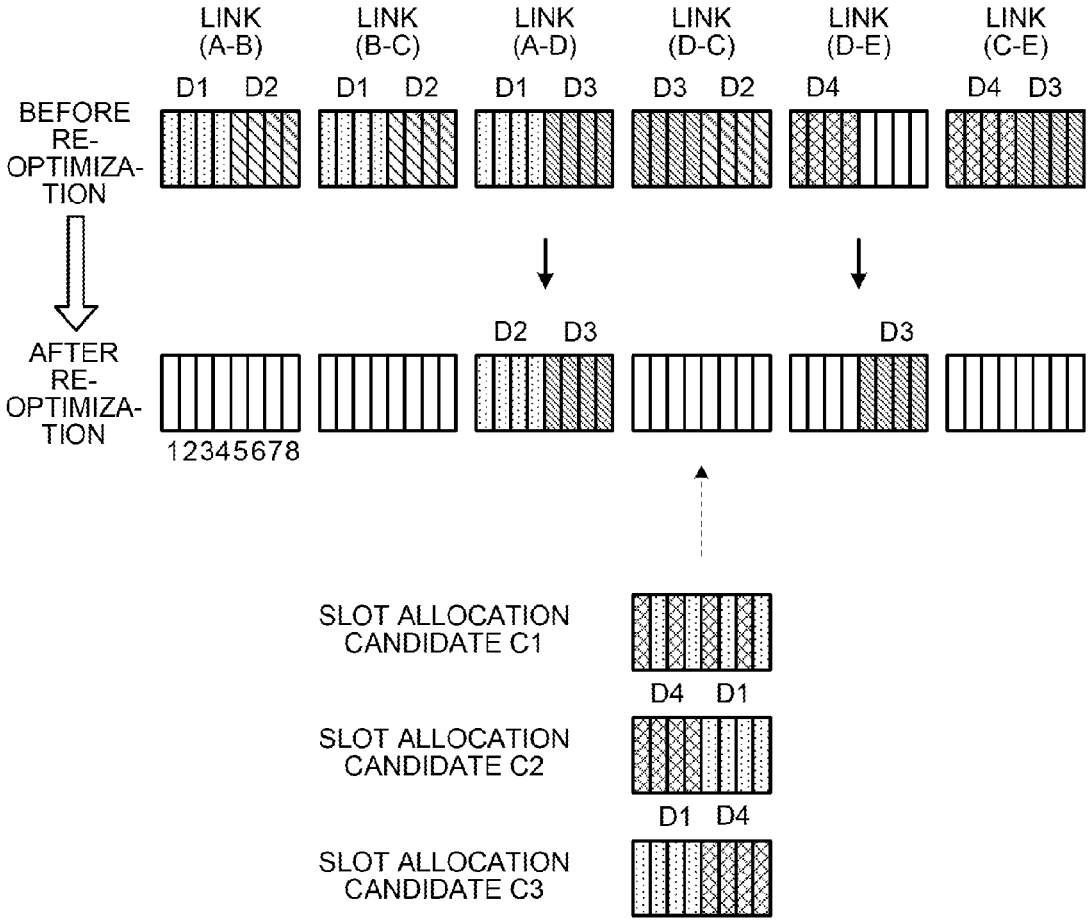

FIG.19

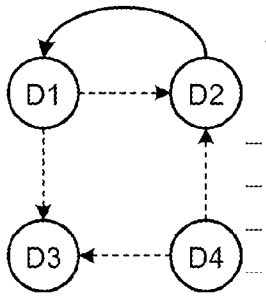

$$AHC(D2) + 1 - BigM * (1 - IsRepOccur(D2, D1)) \leqq AHC(D1)$$
$$AHC(D3) + 1 - BigM * (1 - IsRepOccur(D3, D1)) \leqq AHC(D1)$$
$$AHC(D2) + 1 - BigM * (1 - IsRepOccur(D2, D4)) \leqq AHC(D4)$$
$$AHC(D3) + 1 - BigM * (1 - IsRepOccur(D3, D4)) \leqq AHC(D4)$$
$$AHC(D1) + 1 \leqq AHC(D2)$$

$$-M * IsRepOccur(D2, D1) + RepUsedSlot(D2, D1, LINK\ D-C) \leq 0$$
$$-M * IsRepOccur(D3, D1) + RepUsedSlot(D3, D1, LINK\ D-C) \leq 0$$
$$-M * IsRepOccur(D2, D4) + RepUsedSlot(D2, D4, LINK\ D-C) \leq 0$$
$$-M * IsRepOccur(D3, D4) + RepUsedSlot(D3, D4, LINK\ D-C) \leq 0$$

$$RepUsedSlot(D3, D1, LINK\ D-C) + RepUsedSlot(D2, D1, LINK\ D-C) = 4 * IsHOODUUsed(LINK\ D-C, D1)$$
$$RepUsedSlot(D3, D4, LINK\ D-C) + RepUsedSlot(D2, D4, LINK\ D-C) = 4 * IsHOODUUsed(LINK\ D-C, D4)$$

$$IsUsedHOODU(LINK\ D-C, D1) = 1$$
$$IsUsedHOODU(LINK\ D-C, D4) = 1$$

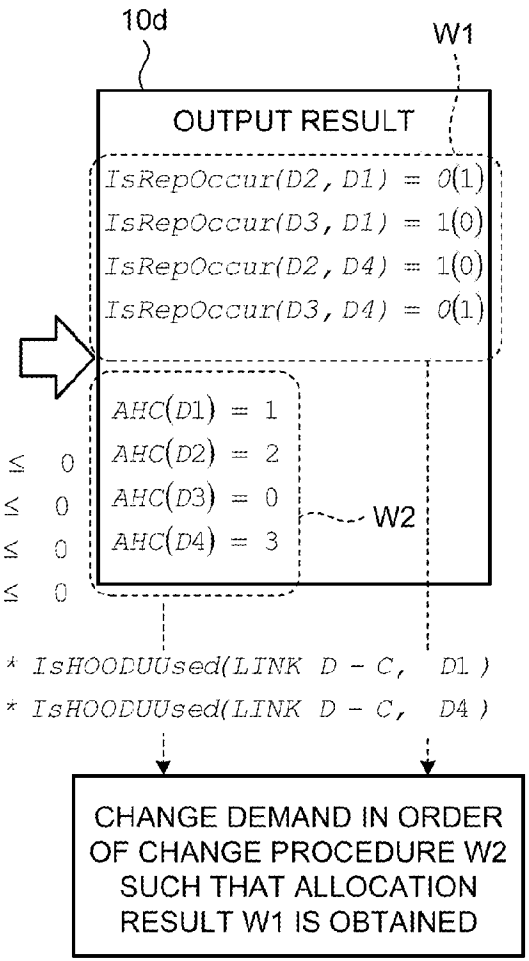

FIG.20

124

	RELATED ART	PRESENT EMBODIMENT
NUMBER OF DESIGNING ATTEMPTED	$(M!)^N$	1
NUMBER OF VARIABLE IN EACH EXPRESSION	d	$d + d_{slot}{}^{*}M!$
CALCULATION TIME ORDER	$d^{*}(M!)^N$	$<d^{*}(1+M!)$

NETWORK DESIGN APPARATUS AND NETWORK DESIGN METHOD

CROSS-REFERENCE TO RELATED APPLICATION

This application is based upon and claims the benefit of priority of the prior Japanese Patent Application No. 2013-105574, filed on May 17, 2013, the entire contents of which are incorporated herein by reference.

FIELD

The embodiments discussed herein are related to a network design apparatus and a network design method.

BACKGROUND

An optical network adopting a WDM (Wavelength Division Multiplex) system in the related art is designed to make the most of a resource (such as a bandwidth of an optical line) at the start of operation. As time passes, however, the network usually experiences a situation where the resource is not used to the fullest due to the change in distribution of a demand from a client, the change in network topology, or equipment failure, for example. Under such situation, it is effective for a network design apparatus to re-optimize the network by redesigning the network that is once optimized.

The network design apparatus in the attempt to re-optimize the network allocates the demand to each time slot (hereinafter simply referred to as a "slot") of the optical line in a way different from the previous way. There is a possibility that the allocation causes communication interruption in the network in operation when the allocation of the demand to the slot is cancelled (hereinafter referred to as "demand cancellation" as needed) without preparing a substitute optical line in advance. Being a factor of interrupting a service provided by a telecommunications carrier, the communication interruption is desirably avoided as much as possible.

Patent Document 1: Japanese Laid-open Patent Publication No. 2012-199644

However, the aforementioned network design has had a problem as follows. That is, the network design apparatus in the related art has performed the allocation to the slot without considering the procedure of changing each demand in re-optimizing the network. The network design apparatus has therefore been unable to derive a procedure by which the network can be re-optimized without performing the demand cancellation (hereinafter referred to as a "best procedure") in a short period of time when such procedure is available. Moreover, the network design apparatus has been unable to derive, in a short period of time, a procedure by which the network can be re-optimized with the smallest number of demand cancellations (hereinafter referred to as a "second best procedure") when the best procedure is not available. These have been the factors of inhibiting the procedure that is effective in efficiently re-optimizing the network from being promptly presented to a user.

SUMMARY

According to an aspect of the embodiments, a network design apparatus includes: a memory; and a processor coupled to the memory. The processor executes a process including: calculating an allocation pattern not requiring cancellation of a connection request from among a plurality of allocation candidates, when the connection request transmitted/received between nodes on a network is to be allocated to a slot that constructs a link on the network; determining a change procedure of the connection request in order to change an allocation pattern provided before the network is re-optimized to the allocation pattern calculated at the calculating; and outputting the allocation pattern calculated at the calculating as an allocation pattern after the network is re-optimized, along with the change procedure determined at the determining.

The object and advantages of the invention will be realized and attained by means of the elements and combinations particularly pointed out in the claims.

It is to be understood that both the foregoing general description and the following detailed description are exemplary and explanatory and are not restrictive of the invention.

BRIEF DESCRIPTION OF DRAWINGS

FIG. **1** is a diagram illustrating a configuration of a network design system;

FIG. **2** is a diagram illustrating a functional configuration of a network design apparatus;

FIG. **3** is a diagram illustrating a hardware configuration of the network design apparatus;

FIG. **4**A is a diagram illustrating a configuration of a network before being re-optimized;

FIG. **4**B is a diagram illustrating a configuration of the network after being re-optimized;

FIG. **5** is a diagram illustrating an allocation pattern of a demand to a slot;

FIG. **6**A is a diagram used to describe a first half of how a change procedure of the demand changes in accordance with the allocation pattern of the demand after re-optimization;

FIG. **6**B is a diagram illustrating a demand change procedure to perform the re-optimization when the best design is available;

FIG. **7**A is a diagram used to describe a second half of how the change procedure of the demand changes in accordance with the allocation pattern of the demand after the re-optimization;

FIG. **7**B is a diagram illustrating the demand change procedure to perform the re-optimization when the best design is unavailable;

FIG. **8** is a diagram illustrating a demand dependency graph representing demand dependency before and after the re-optimization;

FIG. **9**A is a diagram illustrating a slot allocation pattern, for which the best design can be implemented, before and after the re-optimization;

FIG. **9**B is a diagram illustrating how the demand dependency graph is created based on the slot allocation pattern for which the best design can be implemented;

FIG. **9**C is a diagram illustrating the demand dependency graph created based on the slot allocation pattern for which the best design can be implemented;

FIG. **10**A is a diagram illustrating the slot allocation pattern, for which the best design cannot be implemented, before and after the re-optimization;

FIG. **10**B is a diagram illustrating how the demand dependency graph is created based on the slot allocation pattern for which the best design cannot be implemented;

FIG. **10**C is a diagram illustrating the demand dependency graph created based on the slot allocation pattern for which the best design cannot be implemented;

FIG. **11** is a flowchart used to describe a slot allocation process considering the demand change procedure;

FIG. **12** is a diagram illustrating how a different optical line is classified into a group connected by the same physical link;

FIG. **13**A is a diagram illustrating a state of the demand having a fixed slot before the re-optimization;

FIG. **13**B is a diagram illustrating a state of the demand having the fixed slot after the re-optimization;

FIG. **14**A is a diagram illustrating the demand when an AHC variable has a solution;

FIG. **14**B is a diagram illustrating the demand when the AHC variable does not have a solution;

FIG. **15** is a diagram illustrating a list of parameters of a calculation model used in finding the allocation pattern of the demand to the slot;

FIG. **16**A is a diagram illustrating the demand that does not require a process of easing a constraint which fixes the slot being used;

FIG. **16**B is a diagram illustrating the demand that requires the process of easing the constraint which fixes the slot being used;

FIG. **17** is a diagram illustrating whether or not cancellation is feasible according to a type of the demand;

FIG. **18**A is a diagram used to describe the number of demands involved in the slot allocation out of the total number of demands;

FIG. **18**B is a diagram used to describe a method of allocating the demand involved in the slot allocation;

FIG. **19** is a diagram illustrating how an optimal solution for the demand change can be obtained by single calculation; and

FIG. **20** is a diagram used to describe an effect of reducing a calculation load accompanying the calculation of an allocation result and the change procedure.

DESCRIPTION OF EMBODIMENTS

Preferred embodiments will be explained with reference to accompanying drawings. Note that the network design apparatus and the network design method are not to be limited by the following embodiments.

A configuration of a network design system according to an embodiment disclosed in the application will be described first. FIG. **1** is a diagram illustrating the configuration of a network design system **1**. As illustrated in FIG. **1**, the network design system **1** includes a network N1 and a network design apparatus **10** connected on the network N1. A plurality of nodes A to G is arranged on the network N1 where each of the nodes A to G is connected by an optical line link L1. While FIG. **1** illustrates the configuration where the network design apparatus **10** is connected to the node A from among the plurality of nodes A to G, the network design apparatus **10** may be connected to another node including the nodes B to G as well.

FIG. **2** is a diagram illustrating a functional configuration of the network design apparatus **10**. As illustrated in FIG. **2**, the network design apparatus **10** includes an input unit **11**, a storage unit **12**, an arithmetic unit **13**, and an output unit **14**. Each of these components is connected to be able to input/output a signal and/or data in one way or two ways.

The input unit **11** inputs, as information related to the network N1 to be designed, a location of a station, the presence of fiber connection between the stations, and which demand corresponding to a bandwidth of what extent is present from which station to which station, for example. The input unit **11** further inputs information pertaining to a demand generated in the network N1 and an arrangement state of the optical line link L1 before and after performing re-optimization designing, for example. Specifically, the input unit **11** inputs information such as the arrangement of the optical line within the network N1 or how the demand is accommodated in the optical line, before and after the re-optimization.

The storage unit **12** includes an input information storage unit **121** and a constraint easement information storage unit **122**. The input information storage unit **121** stores the various pieces of information input by the input unit **11**. The constraint easement information storage unit **122** stores information on a site (such as between the nodes A and B) subjected to a constraint to fix a slot to be used when performing preprocessing of the network design. The constraint easement information storage unit **122** further stores information on a demand (such as a demand D1), the cancellation of which is permitted in a constraint easement process.

The arithmetic unit **13** includes a change procedure consideration function-equipped slot allocation unit **131** and a change procedure determination unit **132**. The change procedure consideration function-equipped slot allocation unit **131** further includes a mathematical programming model construction unit **131***a*, an allocation pattern calculation unit **131***b*, and a constraint easement feasibility determination unit **131***c*. The mathematical programming model construction unit **131***a* constructs, based on the information stored in the storage unit **12**, a mathematical programming model that can be represented by using a variety of parameters to be described later. The allocation pattern calculation unit **131***b* calculates an optimal slot allocation pattern by using the mathematical programming model constructed by the mathematical programming model construction unit **131***a*. The constraint easement feasibility determination unit **131***c* determines whether or not the constraint easement process can be applied in each station within the network N1 from the result of calculation performed by the allocation pattern calculation unit **131***b*, and at the same time updates the information within the constraint easement information storage unit **122** based on the determination result.

The change procedure determination unit **132** determines a demand change procedure based on the result of slot allocation performed by the change procedure consideration function-equipped slot allocation unit **131**. Specifically, the change procedure determination unit **132** extracts the demand change procedure from the slot allocation result obtained by executing the mathematical programming model and outputs the procedure to the output unit **14**.

Based on the calculation result by the allocation pattern calculation unit **131***b*, the output unit **14** outputs information of the demand that requires cancellation and information of the slot formed on the optical line link L1 in which the demand is accommodated. The output unit **14** further outputs the demand change procedure extracted by the change procedure determination unit **132**.

Now, a hardware configuration of the network design apparatus **10** will be described. FIG. **3** is a diagram illustrating the hardware configuration of the network design apparatus **10**. In the network design apparatus **10** as illustrated in FIG. **3**, a processor **10***a*, a storage device **10***b*, an input device **10***c*, and a display device **10***d* are connected to be able to input/output various signals and/or data through a bus. The processor **10***a* is a CPU (Central Processing Unit) or a DSP (Digital Signal Processor), for example. The storage device **10***b* includes a non-volatile storage device such as an HD (Hard Disk), a ROM (Read Only Memory), and a flash memory as well as a RAM such as an SDRAM (Synchronous Dynamic Random Access Memory). The input device **10***c* is formed of a keyboard, a mouse, or a touch panel, for example, while the

display device **10***d* is formed of an LCD (Liquid Crystal Display) or an ELD (Electro Luminescence Display), for example.

With regard to the correspondence between the functional configuration and the hardware configuration, the input unit **11** among the functional components of the network design apparatus **10** illustrated in FIG. **2** is realized by the input device **10***c* as hardware. The storage unit **12** is realized by the storage device **10***b*, and the arithmetic unit **13** is realized by the processor **10***a* and the storage device **10***b*. The output unit **14** is realized by the processor **10***a* and the display device **10***d*.

Next, an overview of a network re-optimization process will be described with reference to FIGS. **4**A and **4**B. FIG. **4**A is a diagram illustrating a configuration of the network N1 before being re-optimized. The optical line link L1 illustrated in FIG. **4**A is a 10-Gbps optical line in which eight slots can be allocated per span (between adjacent nodes). Each of demands D1 to D4 is a 5-Gbps connection request requiring four slots per span. In the network N1 before being re-optimized, the demand D1 connects between the nodes D and C via the nodes A and B, and the demand D2 connects between the nodes A and D via the nodes B and C, as illustrated in FIG. **4**A. Likewise, the demand D3 connects between the nodes A and E via the nodes D and C, and the demand D4 connects between the nodes D and C via the node E. Accordingly, the resource to be used equals 11 spans×four slots.

On the other hand, FIG. **4**B is a diagram illustrating the configuration of the network N1 after being re-optimized. As illustrated in FIG. **4**B, the demand D1 is optimized to have a route directly connecting the nodes D and C, and the demand D2 is optimized to have a route directly connecting the nodes A and D. The demand D3 is optimized to have a route connecting between the nodes A and E via not the node C but only the node D. Moreover, the demand D4 is optimized to have a route directly connecting the nodes D and C. As a result, the resource to be used equals only five spans×four slots, which means that the resource to be used can be cut down by 24 (=44−20) resources as compared to pre-optimization.

What is important in the aforementioned re-optimization is the change procedure of the network configuration, namely, the route to realize the demand from the client. While the network design apparatus **10** can free the slot of the optical line in use by performing the demand cancellation, it is desired that the demand cancellation be avoided as much as possible in terms of securing operation reliability. Therefore, the change procedure with no demand cancellation can be defined as a "best design", whereas the change procedure with the minimum number of demand cancellations can be defined as a "second best design". It is further desired that the number of changes of the demand be kept to the minimum as much as possible.

The change of demand is implemented by a switching function at each station only when there exists a vacant slot in the optical line link L1. In a case of an OTN (Optical Transport Network), for example, the change of the demands D1 to D4 can be implemented by utilizing an ODU (Optical Data Unit)−XC (cross Connect) function.

Here, a demand allocation pattern (slot allocation pattern) will be described as a precondition to the change procedure of the demand. The allocation pattern of the optical line link L1 configuring the network N1 is already determined in the present embodiment where it is assumed that the network N1 is optimized once. Accordingly, what becomes important is how the network design apparatus **10** designs the allocation pattern after re-optimization.

FIG. **5** is a diagram illustrating the demand allocation pattern to the slot. As illustrated in FIG. **5**, the optical line link L1 has eight slots per internode, whereas the demand occupies four slots per internode. This means that only two types of demands (such as the demand D1 and the demand D2) are allocated at most in a single internode (eight slots) on the optical line link L1. FIG. **5** illustrates the example where the demands D1 and D2 are allocated in the slots between the nodes A and B, while the demands D2 and D3 are allocated in the slots between the nodes B and C. In this case, however, the demand can be allocated in each of links A-B and B-C in innumerable ways including at least four slot allocation patterns P1 to P4 illustrated in FIG. **5**. The change procedure the demand varies according to the slot allocation pattern.

FIG. **6**A is a diagram used to describe a first half of how the change procedure of the demand changes in accordance with the allocation pattern (allocation result) of the demand after re-optimization. As illustrated in FIG. **6**A, there is assumed a case where the demands D2 and D3, D1 and D4, and D3 are allocated in links A-D, D-C, and D-E, respectively, as the allocation pattern after re-optimization. FIG. **6**B is a diagram illustrating the demand change procedure to perform the re-optimization when the best design is available. As illustrated in FIG. **6**B, the network design apparatus **10** can perform the re-optimization without cancelling any demands by changing the slot to which each of the demands D3, D1, D2, and D4 is allocated in this order from the allocation pattern before the re-optimization. In other words, the network design apparatus **10** can realize the best design of the network N1.

On the other hand, FIG. **7**A is a diagram used to describe a second half of how the demand change procedure changes in accordance with the allocation pattern (allocation result) of the demand after the re-optimization. As illustrated in FIG. **7**A, there is assumed a case where the demands D2 and D3, D4 and D1, and D3 are allocated in the links A-D, D-C, and D-E, respectively, as the allocation pattern after the re-optimization. Unlike FIG. **6**A, FIG. **7**A illustrates a state (a deadlock state) where the demand D2 needs to be moved before moving the demand D1 and the demand D1 needs to be moved before moving the demand D2 in regions R1 and R2 each enclosed with a broken line, respectively. This means that at least either one of the demands D1 and D2 needs to be cancelled in order for the slot allocation pattern to be in the state after the re-optimization.

FIG. **7**B is a diagram illustrating the demand change procedure to perform the re-optimization when the best design is unavailable. As illustrated in FIG. **7**B, the network design apparatus **10** starts from the allocation pattern before the re-optimization, cancels the demand D1 temporarily, and then changes the slot to which each of the demands D2, D3, and D4 is allocated in this order. The network design apparatus **10** thereafter resets the cancelled demand D1 to be able to perform the re-optimization while keeping the number of demand cancellations to the minimum (one). In other words, the network design apparatus **10** can realize the second best design of the network N1. As described above, the difference in the demand allocation patterns to the slot (refer to FIGS. **6**A and **7**A) affects the change procedure of the demand, where the change procedure varies greatly according to the demand allocation pattern. It is therefore important for the network design apparatus **10** to consider the change procedure of the demand in the determination of the demand allocation pattern when performing the re-optimization of the network N1.

Now, there will be described a demand dependency graph that is an effective tool to find out the aptitude of the change procedure. FIG. **8** is a diagram illustrating the demand dependency graph representing demand dependency before and after the re-optimization. As illustrated in FIG. **8**, the demand dependency graph is a digraph in which the optical line link

L1 has a direction. In FIG. **8**, an arrow Y1 is drawn from the demand D4 as a starting point toward the demand D1. One can tell from this that the slot used by the demand D1 is to be used by the demand D4 after the re-optimization. Likewise, one can tell from arrows Y2 and Y3 that the slot used by each of the demands D2 and D3 is to be used by the demands D1 and D2 after the re-optimization, respectively. The demand dependency graph is created while considering the dependency between the demands for each slot, as described above.

The network design apparatus **10** can determine the feasibility of the network design as follows by referring to the demand dependency graph. The best design illustrated in FIG. **6**A is feasible when the demand dependency graph does not include a loop, for example. On the other hand, the second best design is feasible when the demand dependency graph includes a loop but there is at least one demand (such as the demands D1 and D2) that can be cancelled among the plurality of demands configuring the loop. However, the network design apparatus **10** can realize neither the best design nor the second best design for the network N1 when there is no demand that can be cancelled on the loop.

Next, a method of creating the demand dependency graph will be described with reference to FIGS. **9**A to **10**C. FIG. **9**A is a diagram illustrating the slot allocation pattern, for which the best design can be implemented, before and after the re-optimization. Being similar to FIG. **6**A, FIG. **9**A will not be described in detail. FIG. **9**B is a diagram illustrating how the demand dependency graph is created based on the slot allocation pattern for which the best design can be implemented. As illustrated in FIG. **9**B, the demand dependency graph is created for each section of the optical line link L1 while considering the dependency among each of the demands D1 to D4.

For example, no arrow is drawn in the links A-B, B-C, D-E, and C-E where the demand allocation is not performed after the re-optimization, whereas the demand D1 is replaced by the demand D2 in the link A-D. Accordingly, an arrow Y4 is drawn from the demand D2 toward the demand D1 in the link A-D in FIG. **9**B. Likewise, the demand D1 is replaced by the demand D3 as well as the demand D4 is replaced by the demand D2 in the link D-C. Accordingly, an arrow Y5 from the demand D3 toward the demand D1 as well as an arrow Y6 from the demand D2 toward the demand D4 are drawn in the link nodes D-C in FIG. **9**B.

The demand dependency graph is created by putting together all the demand dependencies occurring in each section illustrated in FIG. **9**B. FIG. **9**C is a diagram illustrating the demand dependency graph created based on the slot allocation pattern for which the best design can be implemented. As illustrated in FIG. **9**C, the created demand dependency graph does not include a loop, whereby it is determined that the best design can be implemented for the slot allocation pattern before and after the re-optimization (refer to FIG. **9**A). In addition to the feasibility of the best design, the change procedure of the demand can also be specified from the demand dependency graph illustrated in FIG. **9**C. That is, the network design apparatus **10** can acquire the change procedure of the demands D1 to D4 from the allocation pattern before the re-optimization to the allocation pattern after the re-optimization by tracing the arrows Y5, Y4, and Y6 illustrated in the demand dependency graph in a reverse direction.

FIG. **10**A is a diagram illustrating the slot allocation pattern, for which the best design cannot be implemented, before and after the re-optimization. Being similar to FIG. **7**A, FIG. **10**A will not be described in detail. FIG. **10**B is a diagram illustrating how the demand dependency graph is created based on the slot allocation pattern for which the best design cannot be implemented. As illustrated in FIG. **10**B, the demand dependency graph is created for each section of the optical line link L1 while considering the dependency among each of the demands D1 to D4.

For example, no arrow is drawn in the links A-B, B-C, D-E, and C-E where the demand allocation is not performed after the re-optimization, whereas the demand D1 is replaced by the demand D2 in the link A-D. Accordingly, an arrow Y7 is drawn from the demand D2 toward the demand D1 in the link A-D in FIG. **10**B. Likewise, the demand D3 is replaced by the demand D4 as well as the demand D2 is replaced by the demand D1 in the link D-C. Accordingly, an arrow Y8 from the demand D4 toward the demand D3 as well as an arrow Y9 from the demand D1 toward the demand D2 are drawn in the link D-C in FIG. **10**B.

The demand dependency graph is created by putting together all the demand dependencies occurring in each section illustrated in FIG. **10**B. FIG. **10**C is a diagram illustrating the demand dependency graph created based on the slot allocation pattern for which the best design cannot be implemented. As illustrated in FIG. **10**C, the created demand dependency graph includes a loop within a region R3 enclosed with a broken line. It can therefore be determined that the best design cannot be implemented for the slot allocation pattern before and after the re-optimization (refer to FIG. **10**A). In addition to the feasibility of the best design, the demand to be cancelled can also be specified from the demand dependency graph illustrated in FIG. **10**C. That is, the loop is formed of the arrows Y7 and Y8 illustrated in the demand dependency graph, whereby the network design apparatus **10** can re-optimize the network N1 by allowing either one of the demands D1 and D2 located at the edge of the loop to be cancelled.

The operation will now be described. FIG. **11** is a flowchart used to describe a slot allocation process considering the demand change procedure.

In S**1**, the mathematical programming model construction unit **131***a* divides the optical line into groups each having the same physical link, as a first half of preprocessing. FIG. **12** is a diagram illustrating how different optical line links M1 and M2 are classified into a group connected by the same physical link T1. As illustrated in FIG. **12**, the optical line links M1 and M2 are mutually different links but connect the nodes A to D by the same physical link T1. The optical line link M1 and the optical line link M2 are thus classified as the optical line within the same group. In this manner, the mathematical programming model construction unit **131***a* executes the process of putting together the plurality of optical line links M1 and M2 corresponding to the same physical link T1 into one group.

In S**2**, the mathematical programming model construction unit **131***a* fixes the slot of the demand used both before and after the re-optimization in each physical link, as a second half of the preprocessing. FIG. **13**A is a diagram illustrating a state of the demands D1 and D2 each having the fixed slot before the re-optimization. FIG. **13**B is a diagram illustrating a state of the demands D1 and D2 each having the fixed slot after the re-optimization. As illustrated in FIGS. **13**A and **13**B, the demands D1 and D2 out of the demands D1 to D4 are used in the same physical link T1 (within the same group) before and after the re-optimization. Accordingly, the mathematical programming model construction unit **131***a* fixes the slot used by each of the demands D1 and D2 to the slot on the left side of each of the optical line links M1 and M2. On the other hand, the slot of which of the optical line links M1 and M2 to be used to allocate demands D5 and D6 is not fixed, but is selected and determined by a network designer.

That is, in S**2**, the network design apparatus **10** applies a constraint to fix the slot to which the demand is allocated when the same demand (the demands D1 and D2 in the present embodiment) is accommodated in the same group both before and after the re-optimization. This constraint allows the network design apparatus **10** to greatly reduce the calculation load on a first round of calculation model and to obtain an optimal solution (optimal allocation pattern and change procedure) under most conditions. There is however a case where no solution is obtained as a result of the constraint depending on the allocation pattern before the re-optimization. The network design apparatus **10** in such case provides relief by easing the constraint in a process to be described later.

In S**3**, the mathematical programming model construction unit **131***a* of the network design apparatus **10** constructs a mathematical programming model that is a calculation model utilizing mathematical programming, and then the allocation pattern calculation unit **131***b* uses the model to calculate the demand allocation pattern to the slot. The network design apparatus **10** considers the demand change procedure when calculating the allocation pattern.

The mathematical programming model construction unit **131***a* constructs the mathematical programming model by using a parameter such as an AHC (Acyclic Hop Count) variable. The AHC variable is an integer value given to each of the demands D1 to D4 and is determined under the constraint that, in the aforementioned demand dependency graph, the demand on the upstream side has to have a value greater than that of the demand on the downstream side. FIG. **14**A is a diagram illustrating the demand when the AHC variable has a solution. As illustrated in FIG. **14**A, the AHC variable has a solution only when the demand dependency graph is an acyclic graph. The allocation pattern calculation unit **131***b* calculates the allocation pattern such that the AHC variable has a solution, namely, the allocation pattern where the demand dependency graph does not include a loop.

FIG. **14**B is a diagram illustrating the demand when the AHC variable does not have a solution. As illustrated in FIG. **14**B, the AHC variable does not have a solution when the demand dependency graph is a cyclic graph (a graph including a loop). FIG. **15** is a diagram illustrating a list of parameters of the calculation model used in finding the demand allocation pattern to the slot. The network design apparatus **10** uses the AHC variable and the parameter illustrated in FIG. **15** to calculate the optimal solution where the demand dependency graph does not include the loop.

Here, the calculation model to implement the design (best design) in which no demand is cancelled is constructed by using constraint expressions (1) to (5), constraint expression (6) from which a term including "IsDisrupted(cd)" is removed, and the parameters corresponding to Nos. 1 to 8, 10, and 12 to 15 in FIG. **15**. This calculation model becomes a basic model.

$$\sum_{cd\in h} RepUsedSlot(cd, rd, h) + NewUsedSlot(\mathrm{rd}, h) = BW(\mathrm{rd}) * IsHOODUUsed(h, rd)(\text{for } \forall\, rd, h). \tag{1}$$

$$\sum_{rd} RepUsedSlot(cd, rd, h) \le BW(cd) * RemainHOODU(h)(\text{for } \forall\, cd, h). \tag{2}$$

-continued

$$NewUsedSlot(rd, h) \le \left(BW(h) - \sum_{cd\in h} BW(cd)\right) * IsUsedHOODU(h, rd)(\text{for } \forall\, h). \tag{3}$$

$$-M * IsRepOccur(cd, rd) + \sum_{h} RepUsedSlot(cd, rd, h)\Big) \le 0(for\forall\ (cd, rd)\text{except } cd = rd) \tag{4}$$

$$\sum_{h} IsUsedHOODU(h, rd) = 1(\text{for } \forall\, hr, rd) \tag{5}$$

$$-M * IsDisrupted(cd) - M * (1 - IsRepOccur(cd, rd)) + (AHC(cd) + IsRepOccur(cd, rd) \le AHC(rd)(for\forall\ (cd, rd)\text{except } cd = rd) \tag{6}$$

The calculation model to implement the design (second best design) in which the minimum number of demands are cancelled is constructed by using constraint expressions (1) to (5), constraint expression (6) (including the term which includes "IsDisrupted (cd)"), and the parameters corresponding to Nos. 1 to 10 and 12 to 15 in FIG. **15**. At this time, the mathematical programming model construction unit **131***a* can construct the aforementioned calculation model by applying constraint expression (7) below to the demand that is not permitted to be cancelled among the demands D1 to D4, for each of which the allocation pattern is to be calculated.

$$Is\text{Disrupte } d(d)=*\text{or Disrupt impossible } d) \tag{7}$$

Note that the network design apparatus **10** is an apparatus which re-optimizes the network N1 that is optimized once, and thus needs to correspond in a way different from constructing the aforementioned calculation model when the design result itself varies before and after the re-optimization. In such case, the mathematical programming model construction unit **131***a* uses constraint expressions (1) to (7), constraint expressions (8) and (9), and the parameters corresponding to Nos. 1 to 15 in FIG. **15** to construct the calculation model.

The aforementioned case corresponds to a case where the number of links used varies before and after the re-optimization. For example, in FIGS. **4**A and **4**B, the number of links used by the demands D1 to D4 before the re-optimization equals "6" (all six links), whereas the number of links used by the demands D1 to D4 after the re-optimization equals "3". This means that the number of links used in the network N1 decreases as the network is re-optimized. Accordingly, the allocation pattern calculation unit **131***b* of the arithmetic unit **13** included in the network design apparatus **10** determines which of the links used before the re-optimization is diverted as the link used after the re-optimization when calculating the allocation pattern. FIGS. **4**A and **4**B illustrate the example where three links A-D, D-C, and D-E out of the six links used before the re-optimization are used (diverted) successively after the re-optimization.

$$\sum_{h\in hr,bw} RemainCHOODU(h) \le TotalCHOODUNum(hr, bw)(for\forall\ hr, bw) \tag{8}$$

-continued

$$\sum_{rd} BW(rd) * IsUsedHOODU(h, rd) - BW(h) * RemainCHOODU(h) \leq 0 (for \forall h) \quad (9)$$

Referring back to FIG. **11**, a demand change procedure extraction unit **132***a* determines the demand change procedure from the acquired demand dependency graph (refer to FIG. **9**C) (S**5**) when the solution exists in the calculation result obtained in S**3** (S**4**; Yes). That is, the demand change procedure extraction unit **132***a* assigns a change order to each of the demands D1 to D4 from the demand D3 in the lowermost stream in the demand dependency graph toward the upstream. Note that when the demand dependency graph includes the loop (refer to FIG. **10**C), the demand change procedure extraction unit **132***a* assigns the change order from the demand D1 as a starting point toward the upstream, the demand D1 being the demand that can be cancelled in the loop. Thereafter, the slot to which each of the demands D1 to D4 is allocated is changed according to the assigned order.

When it is determined in S**4** that the solution does not exist in the calculation result obtained in S**3** (S**4**; No), the constraint easement feasibility determination unit **131***c* determines the presence of a fixed slot that can be freed (S**6**). When it is determined that there exists the fixed slot that can be freed (S**6**; Yes), the mathematical programming model construction unit **131***a* eases the constraint to fix the slot being used (S**7**) and re-executes the process from S**3** onward.

Now, a constraint easement process I (easement of constraint to fix the slot being used) will be described in more detail with reference to FIGS. **16**A and **16**B. FIG. **16**A is a diagram illustrating the demand that does not require the process of easing the constraint to fix the slot being used. It is assumed in FIG. **16**A that the demands D1 and D2 are under the fixing constraint which limits the slot being used where the demands D1 and D2 need to use the same 10-Gbps optical line before and after the re-optimization. In this case, in the example illustrated in FIG. **16**A, the demands D1 and D2 use the same optical line before and after the re-optimization, whereby no problem arises in particular when the network design apparatus **10** keeps the slot fixed.

On the other hand, FIG. **16**B is a diagram illustrating the demand that requires the process of easing the constraint which fixes the slot being used. FIG. **16**B illustrates the example where one of the 10-Gbps optical lines is occupied by a 10-Gbps demand D7 after the re-optimization. This causes the solution by which the slot allocation can be executed to be nonexistent unless the network design apparatus **10** eases the constraint which fixes the slot being used and moves either one of the demands D1 and D2 used both before and after the re-optimization. The fixing constraint needs easement in such case.

It is however difficult to make a distinction whether or not the fixing constraint needs easement. Now, in executing the loop of S**3** to S**9** in FIG. **11**, the network design apparatus **10** may implement the design to fix the slot being used in the first round of loop, so that the process always proceeds to S**8** after completing the process in S**6**. The network design apparatus **10** may then ease the constraint which fixes the slot being used for the first time when the solution does not exist after the first round of loop (S**4**; No), so that the process in S**7** can be executed after completing the process in S**6**. This also brings a benefit of improving the extensibility of the network N1.

The constraint easement feasibility determination unit **131***c* determines the presence of the demand that can be cancelled (S**8**) when it is determined in S**6** that there is no fixed slot that can be freed (S**6**; No). When it is determined that there exists the demand that can be cancelled (S**8**; Yes), the mathematical programming model construction unit **131***a* eases a condition under which the demand can be cancelled (S**9**) and then re-executes the process from S**3** onward.

Now, a constraint easement process II (demand cancellation constraint easement) will be described in more detail with reference to FIG. **17**. While the best design is the one that does not require any demand cancellations in the re-optimization, there is a case where the network design apparatus **10** is unable to realize the re-optimization unless the apparatus allows the demand to be cancelled, depending on the mode of the network N1 or the way the network is optimized. In such case where the condition under which the demand can be cancelled needs easement, the network design apparatus **10** can apply constraint expression (7) described above to implement the design in which the demand is cancelled in a variable manner according to the priority of the demand.

FIG. **17** is a diagram illustrating whether or not cancellation is possible according to a type of the demand. In a demand cancellation feasibility table **123** as illustrated in FIG. **17**, for example, the demand to which "1" is assigned as a "type number" has a status "Work (currently used)" and "temporary cancellation not allowed", whereby the highest rank "⊙" is set as "priority". The demand to which "2" is assigned as the "type number" has a status "Work (currently used)" and "temporary cancellation allowed", whereby an intermediate rank "○" is set as the "priority". Thus, a different value is set as the "status" of the demand according to the contract content established with a customer (such as a level of service level agreement) between the demands that are both in the same status "Work (currently used)". Moreover, the demand to which "3" is assigned as the "type number" has a status "Protection (reserved)" and "temporary cancellation allowed", whereby the lowest rank "Δ" is set as the "priority".

The network design apparatus **10** can realize the design as follows, for example, by variably setting whether or not the cancellation is feasible according to the type of the demand. That is, in executing the loop of S**3** to S**9** in FIG. **11**, the network design apparatus **10** implements the design to prohibit cancellation of all types of demands in the first round of loop. The network design apparatus **10** then allows only the demand to which "3" is assigned as the "type number" to be cancelled when the solution is not obtained in the first round of loop (S**4**; No). When the solution still is not obtained in the second round of loop (S**4**; No), the network design apparatus **10** further eases the condition under which the demand can be cancelled, and implements the design to allow the demand to which "2" is assigned as the "type number" to be cancelled in addition to the demand to which "3" is assigned.

The network design apparatus **10** determines that the designing of the network N1 has failed (S**10**) when it is determined in S**8** that there is no demand that can be cancelled (S**8**; No). In particular, for example, it is effective to take the following measures when the solution still does not exist after performing the corresponding constraint easement by algorithm. That is, the network design apparatus **10** can take the measure of adding an optical line, changing the demand, re-executing the re-optimization design where the current designing result is now a prohibitive constraint, or increasing the lower limit of the number of demand cancellations.

Note that the two types of constraint easement processes described above are executed in an arbitrary order. In other words, the used slot fixing constraint easement process precedes the demand cancellation constraint easement process in

FIG. **11**, but the network design apparatus **10** may preferentially execute the latter instead.

The network design apparatus **10** as described above uses integer linear programming (ILP) to execute the process of constructing the slot allocation calculation model having the change procedure consideration function (S**3** in FIG. **11**). At the same time, the network design apparatus **10** executes the constraint easement process (S**6** to S**9** in FIG. **11**) which can be implemented by utilizing the aforementioned model and gradually eases the design constraining condition when the solution does not exist. The network design apparatus **10** can realize the slot allocation design after the re-optimization and the designing of the change procedure which realizes the design content at the same time through each process described above.

Next, a process of outputting the method of re-optimizing the network N1 (the result of demand allocation to the slot and the demand change procedure) with reference to the network N1 illustrated in FIGS. **4**A and **4**B once again.

FIG. **18**A is a diagram used to describe the number of demands involved in the slot allocation out of the total number of demands. While a total number of demands d within the network N1 illustrated in FIGS. **4**A and **4**B is "4", the number of demands d_{slot} involved in the slot allocation is "2", as illustrated in FIG. **18**A. The detailed description will be provided below with reference to FIG. **18**B.

FIG. **18**B is a diagram used to describe the method of allocating the demand involved in the slot allocation. In the link A-D, the demand D3 is allocated both before and after the re-optimization and is thus allocated to the slot in a single pattern (slot numbers 5 to 8). As a result, the demand D2 is allocated to the link A-D in a single pattern (slot numbers 1 to 4). In the link D-E, slots numbered 1 to 4 are used by the demand D4 before the re-optimization so that the demand D3 is determined to be allocated to vacant slots (slot numbers 5 to 8) excluding the slot numbers 1 to 4.

In the link D-C, on the other hand, the demands D1 and D4 are newly allocated to vacant slots (slot numbers 1 to 8) after the demands D3 and D2 allocated thereto before the re-optimization are deleted. Therefore, the method of allocating the demands D1 and D4 is not uniquely specified but includes at least three patterns such as slot allocation candidates C1 to C3 illustrated in FIG. **18**B. That is, only the demands D1 and D4 are involved in the slot allocation out of all the demands D1 to D4 from which the demands D2 and D3 are excluded. The number of demands d_{slot} involved in the slot allocation equals "2" as a result.

The network design apparatus in the related art does not consider the change procedure when executing the slot allocation and therefore tests one by one a slot allocation pattern which possibly has a solution. Accordingly, it is difficult to specify the change procedure which does not result in the deadlock in the first attempt, meaning that the network design apparatus needs to perform the calculation for a plurality of times until the apparatus derives the design that can be re-optimized without cancelling the demand. On the other hand, the network design apparatus **10** according to the present embodiment can derive the network design that can be re-optimized by single calculation. A method of deriving the output result will be described in detail with reference to FIG. **19**.

FIG. **19** is a diagram illustrating how an optimal solution for the demand change can be obtained by the single calculation. As illustrated in FIG. **19**, the network design apparatus **10** uses constraint expressions (6), (4), (1), and (5) to calculate a demand allocation result to the slot (slot allocation result) W1 and a demand change procedure W2 based on a condition input by the user, and outputs the calculated results to the display device **10***d* as a final output result. The user of the network design apparatus **10** can promptly and accurately grasp the optimal solution for the demand change by referring to the output result.

Note that as described above, the link D-C is the only link that has the plurality of slot allocation candidates in the example illustrated in FIG. **19**, so that constraint expression (2) is self-evident. Accordingly, constraint expression (2) will be omitted. Moreover, there is not a new link (HO-ODU: High Order channel-Optical Data Unit) in the example illustrated in FIG. **19** so that constraint expression (3) has "0" on both sides. Accordingly, constraint expression (3) will be omitted.

The network design apparatus **10** includes the allocation pattern calculation unit **131***b*, the demand change procedure extraction unit **132***a*, and the output unit **14** as described above. The allocation pattern calculation unit **131***b* calculates, from among the plurality of allocation candidates, the allocation pattern (the best design in FIG. **6**A) that does not require cancellation of the demands D1 to D4 when allocating the demands D1 to D4 transmitted/received among the nodes A to E on the network N1 to the slot configuring the link on the network N1. The demand change procedure extraction unit **132***a* determines the change procedure of each of the demands D1 to D4 (refer to FIG. **6**B) employed to change the allocation pattern of the network N1 before the re-optimization to the allocation pattern calculated by the allocation pattern calculation unit **131***b*. The output unit **14** outputs the allocation pattern calculated by the allocation pattern calculation unit **131***b* as the allocation pattern of the network N1 after the re-optimization along with the change procedure determined by the demand change procedure extraction unit **132***a*.

That is, the network design apparatus **10** considers the order of changing each of the demands D1 to D4 when changing the pattern of allocating the demands D1 to D4 to each slot in order to re-optimize the network N1. The network design apparatus **10** can therefore re-optimize the network N1 while keeping down the number of cancellations of the demand allocated to the slot.

Moreover, the allocation pattern calculation unit **131***b* of the network design apparatus **10** may calculate the allocation pattern which has the minimum number of cancellations of the demands D1 to D4 (the second best design in FIG. **7**A) when there is no allocation pattern that does not require cancellation of the demands D1 to D4. The allocation pattern calculation unit **131***b* may also determine which of the links before the re-optimization is diverted as the link after the re-optimization when the demands D1 to D4 use different links before and after re-optimizing the network N1.

The network design apparatus **10** may further include the constraint easement feasibility determination unit **131***c* which performs the control to ease the constraint to fix the slot used by each of the demands D1 to D4 or the condition under which each of the demands D1 to D4 can be cancelled, when there is no allocation pattern that does not require cancellation of the demands D1 to D4 (S**4**; No).

The network design apparatus **10** may further include the mathematical programming model construction unit **131***a* which classifies the plurality of optical line links M1 and M2 corresponding to the same physical link T1 into the same group prior to calculating the allocation pattern. In this case, the constraint easement feasibility determination unit **131***c* may add the fixing constraint to the slot used by the same demand (such as D3) before and after the re-optimization, from among the plurality of slots included in the plurality of

optical line links M1 and M2 classified into the same group by the mathematical programming model construction unit **131***a*. In other words, the constraint easement feasibility determination unit **131***c* may add the constraint to fix the aforementioned slot (such as the slot having the slot numbers 5 to 8 of the link A-D in FIG. **6**A) as the slot used by the aforementioned demand (the slot used exclusively by the aforementioned slot).

Now, the effect attained by the network design apparatus **10** according to the present embodiment will be described in more detail with reference to FIGS. **20**, **18**A, and **18**B and the network configuration illustrated in FIGS. **4**A and **4**B as the example.

In a case where there are 72 nodes, 86 links and 60 demands, for example, the optimality of the design result improves twofold or more compared to the method in the related art where the calculation time is the same. That is, even when the change procedure without demand cancellation cannot be presented in the method of the related art, there exists a case where such procedure can be presented according to the network design apparatus **10** of the present embodiment. Moreover, there exists a case where the number of demand cancellations can be decreased as compared to the method in the related art even when the network design apparatus **10** according to the present embodiment cannot present the change procedure without demand cancellation.

The network design apparatus **10** can also obtain the effect of reducing the calculation load by considering the change procedure with use of the mathematical programming. FIG. **20** is a diagram used to describe the effect of reducing the calculation load accompanying the calculation of the allocation result and the change procedure. As the assumption to the description, "N" denotes the number of links involved in the slot allocation, "M" denotes the number of types of the demand before the re-optimization involved in the slot allocation, and the "d_{slot}" denotes the number of demands involved in the slot allocation as described above. The number of slot allocation candidates per link is represented by M! (factorial of M) with use of the "M".

While the total number of links equals "6" in the example illustrated in FIGS. **4**A and **4**B, the link D-C is the only link involved in the slot allocation as described above. N=1 is set as a result. Where the demands D3 and D2 are of different types (refer to FIG. **17**), the number of types of the demand involved in the slot allocation before the re-optimization is two being the demands D3 and D2 (refer to FIG. **18**B). M=2 is set as a result. Likewise, the demands D1 and D4 are involved in the slot allocation in FIG. **18**B, where $d_{slot}=2$ is set as the number of demands d_{slot}. M!=2 is further set as the number of slot allocation candidates M! per link since M=2 is set.

Under the aforementioned condition, as illustrated in a calculation time comparison table **124** in FIG. **20**, the number of designing attempted is decreased to one time compared to $(M!)^N(2^1=2)$ times in the related art. The number of variables constructing each expression is changed from d to $d+d_{slot}\times M!$. Furthermore, the calculation time is changed from $d\times(M!)^N$ to $d\times(1+M!)$ at the longest. While there is no big difference in the calculation times in the present embodiment where a simple network configuration is illustrated for the convenience of description, each of the number of nodes, the number of links, and the number of demands on a single network usually takes a large value such as approximately 50 to 100. Therefore, in calculating the allocation result of the demand to the slot, the network design apparatus **10** considers the change procedure by using the mathematical programming in order to be able to shorten the calculation time that has been in the order of N-th power (where N is a natural number) down to the order of N-fold.

Note that while a ring type is illustrated in FIG. **1** as the form of the network N1 according to the aforementioned embodiment, the present invention can also be applied to any form of network such as a bus type, a star type, a tree type, or a type combining these types. The number of nodes relaying a packet in the network is not limited to seven either.

Furthermore, each component of the network design apparatus **10** in the aforementioned embodiment does not necessarily have to be physically configured as illustrated in the figures. That is, the specific mode of breakup or integration of each device is not limited to what is illustrated in the figures, where all or a part of each device can be functionally or physically broken up or integrated by an arbitrary unit according to a variety of loads or use conditions. The input information storage unit **121** and the constraint easement information storage unit **122**, or the mathematical programming model construction unit **131***a*, allocation pattern calculation unit **131***b*, and constraint easement feasibility determination unit **131***c* may each be integrated as a single component, for example. In contrast, the constraint easement feasibility determination unit **131***c* may be broken up into a part which determines whether or not the constraint easement process can be applied and a part which updates information in the constraint easement information storage unit **122**. Furthermore, a memory which stores the input information and the constraint easement information may be connected to the network design apparatus **10** as an external device thereof through a network or a cable.

According to the embodiments, the network can be re-optimized while suppressing the number of cancellations of the demand allocated to the slot.

All examples and conditional language provided herein are intended for pedagogical purposes of aiding the reader in understanding the invention and the concepts contributed by the inventors to further the art, and are not to be construed as limitations to such specifically recited examples and conditions, nor does the organization of such examples in the specification relate to a showing of the superiority and inferiority of the invention. Although one or more embodiments of the present invention have been described in detail, it should be understood that the various changes, substitutions, and alterations could be made hereto without departing from the spirit and scope of the invention.

What is claimed is:

1. A network design apparatus comprising:

a memory; and

a processor coupled to the memory, wherein the processor executes a process including:

calculating an allocation pattern not requiring cancellation of a connection request from among a plurality of allocation candidates, when the connection request transmitted/received between nodes on a network is to be allocated to a slot that constructs a link on the network;

determining a change procedure of the connection request in order to change an allocation pattern provided before the network is re-optimized to the allocation pattern calculated at the calculating; and

outputting the allocation pattern calculated at the calculating as an allocation pattern after the network is re-optimized, along with the change procedure determined at the determining.

2. The network design apparatus according to claim **1**, wherein the calculating includes calculating an allocation pattern which results in the minimum number of cancella-

tions of the connection request when the allocation pattern not requiring cancellation of the connection request does not exist.

3. The network design apparatus according to claim **1**, wherein the calculating includes determining which of links used before the re-optimization is diverted as a link used after the re-optimization when the connection request uses a different link before and after the network is re-optimized.

4. The network design apparatus according to claim **1**, further including performing control to ease a fixing constraint for a slot used by the connection request or a condition under which the connection request is cancelable, when the allocation pattern not requiring cancellation of the connection request does not exist.

5. The network design apparatus according to claim **4**, further including classifying a plurality of links corresponding to the same physical link into the same group prior to calculating the allocation pattern, wherein

the performing includes adding the fixing constraint to a slot, which is used by the same connection request before and after the re-optimization, from among a plurality of slots constructing the plurality of links classified into the same group at the classifying.

6. A network design method comprising:

in a network design apparatus,

calculating an allocation pattern not requiring cancellation of a connection request from among a plurality of allocation candidates, when the connection request transmitted/received between nodes on a network is to be allocated to a slot that constructs a link on the network, using a processor;

determining a change procedure of the connection request in order to change an allocation pattern provided before the network is re-optimized to the calculated allocation pattern, using the processor; and

outputting the calculated allocation pattern as an allocation pattern after the network is re-optimized, along with the determined change procedure, using the processor.

* * * * *