US009368238B2

(12) **United States Patent**
Theofanous et al.

(10) **Patent No.: US 9,368,238 B2**
(45) **Date of Patent: Jun. 14, 2016**

(54) **NUCLEAR REACTOR MELT ARREST AND COOLABILITY DEVICE**

(75) Inventors: **Theo G. Theofanous**, Santa Barbara, CA (US); **Nam Truc Dinh**, Idaho Falls, ID (US); **Richard M. Wachowiak**, Wilmington, NC (US)

(73) Assignee: **GE-HITACHI NUCLEAR ENERGY AMERICAS LLC**, Wilmington, NC (US)

(*) Notice: Subject to any disclaimer, the term of this patent is extended or adjusted under 35 U.S.C. 154(b) by 1575 days.

(21) Appl. No.: **12/640,399**

(22) Filed: **Dec. 17, 2009**

(65) **Prior Publication Data**

US 2011/0150165 A1 Jun. 23, 2011

(51) **Int. Cl.**

G21C 9/00	(2006.01)
G21C 9/016	(2006.01)
G21C 11/08	(2006.01)

(52) **U.S. Cl.**
CPC ***G21C 9/016*** (2013.01); ***G21C 11/08*** (2013.01); *Y02E 30/40* (2013.01)

(58) **Field of Classification Search**
USPC 376/277, 280, 287, 288
See application file for complete search history.

(56) **References Cited**

U.S. PATENT DOCUMENTS

5,343,506 A 8/1994 Artnik et al.

FOREIGN PATENT DOCUMENTS

EP 1988551 11/2008
WO WO2007-099898 A1 9/2007

OTHER PUBLICATIONS

NEDO-33201, Revision 3, "ESBWR Certification Probabilistic Risk Assessment," Section 21.5, Containment and BIMAC Performance Against Basemat Melt Penetration (BMP), Dated May 31, 2008.*
Nuclear Regulatory Commission document NEDO-33201, Revision 2, "ESBWR Design Certification Probabilistic Risk Assessment".
Office Action dated Oct. 28, 2014 from corresponding Japanese Patent Application No. 2010-230179.
Wachowiak, et al., "21.5 Containment and BIMAC Performance Against BASEMAT Melt Penetration (BMP)," *ESBWR Certification Probabilistic Risk Assessment*, May 2008, NEDO-33201, Revision 3, 44 p.
European Search Report dated May 28, 2014 issued in EP Application No. 10187579.7.
Management of Severe Accident Phenomena in the ESBWR Design dated Mar. 7, 2006 by Rick Wachowiak.

* cited by examiner

Primary Examiner — Jack W Keith
Assistant Examiner — Marshall O'Connor
(74) *Attorney, Agent, or Firm* — Harness, Dickey & Pierce, P.L.C.

(57) **ABSTRACT**

Example embodiments provide a Basemat-Internal Melt Arrest and Coolability device (BiMAC) that offers improved spatial and mechanical characteristics for use in damage prevention and risk mitigation in accident scenarios. Example embodiments may include a BiMAC having an inclination of less than 10-degrees from the basemat floor and/or coolant channels of less than 4 inches in diameter, while maintaining minimum safety margins required by the Nuclear Regulatory Commission.

15 Claims, 5 Drawing Sheets

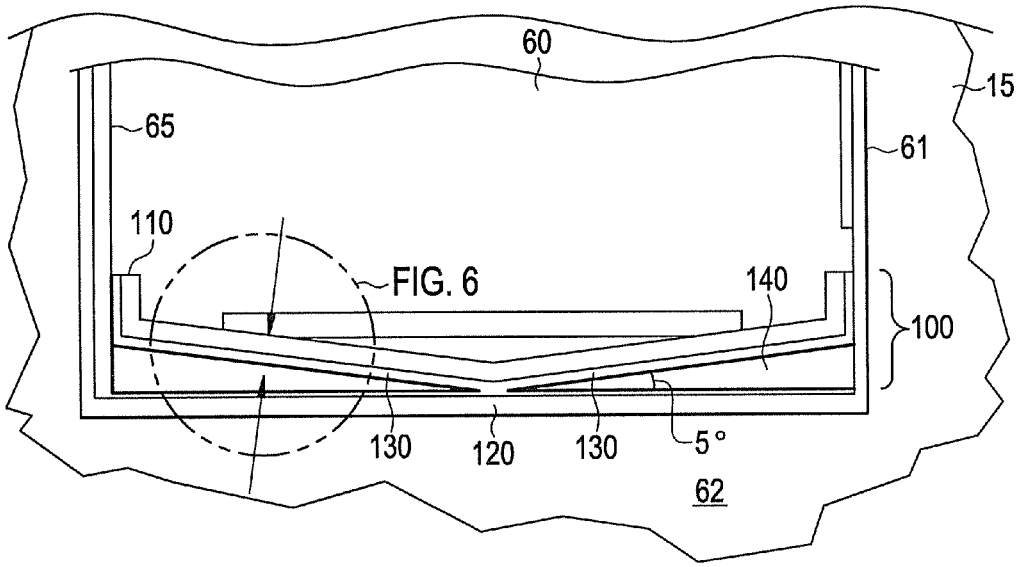

FIG. 1

CONVENTIONAL ART

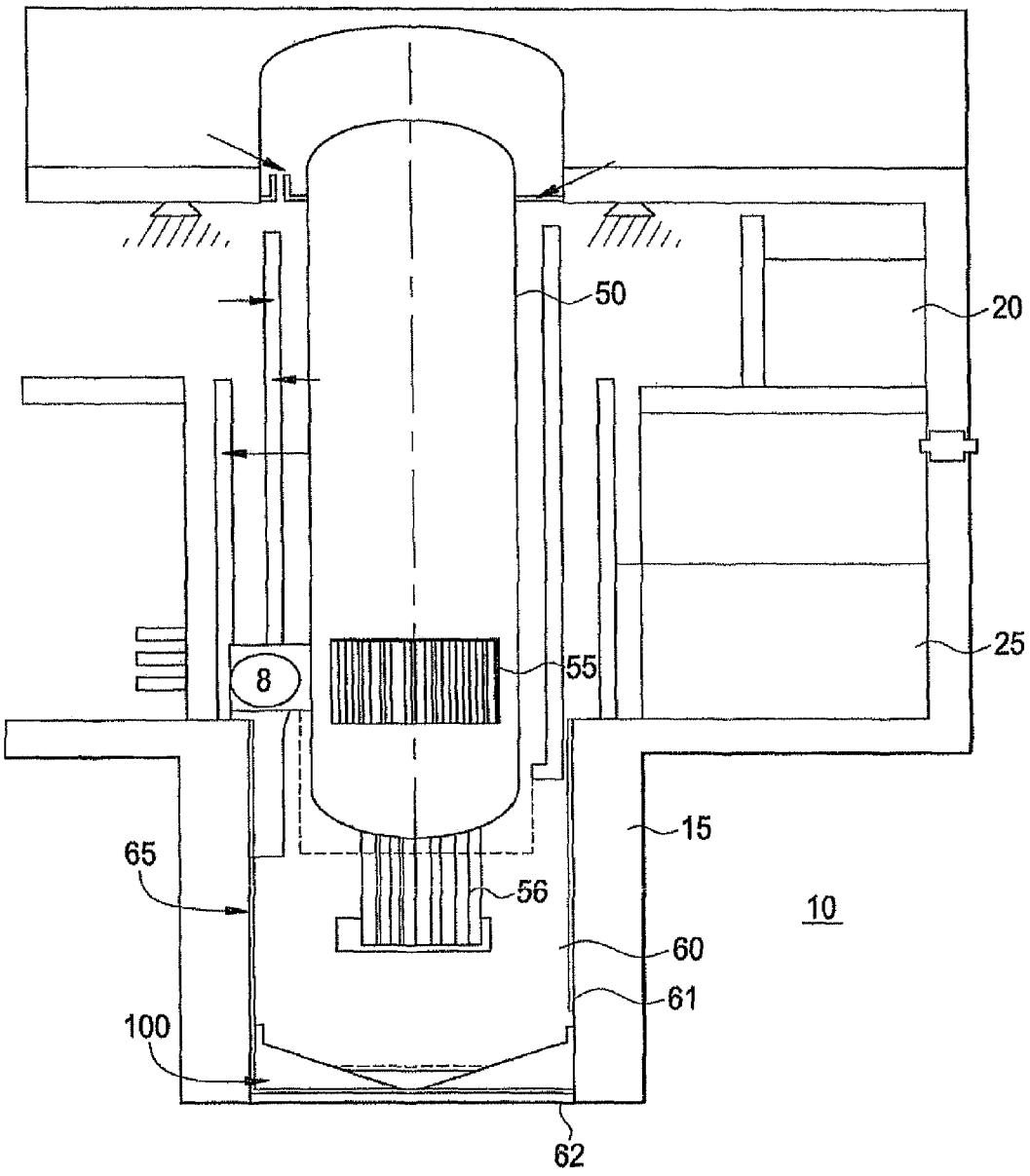

FIG. 2

CONVENTIONAL ART

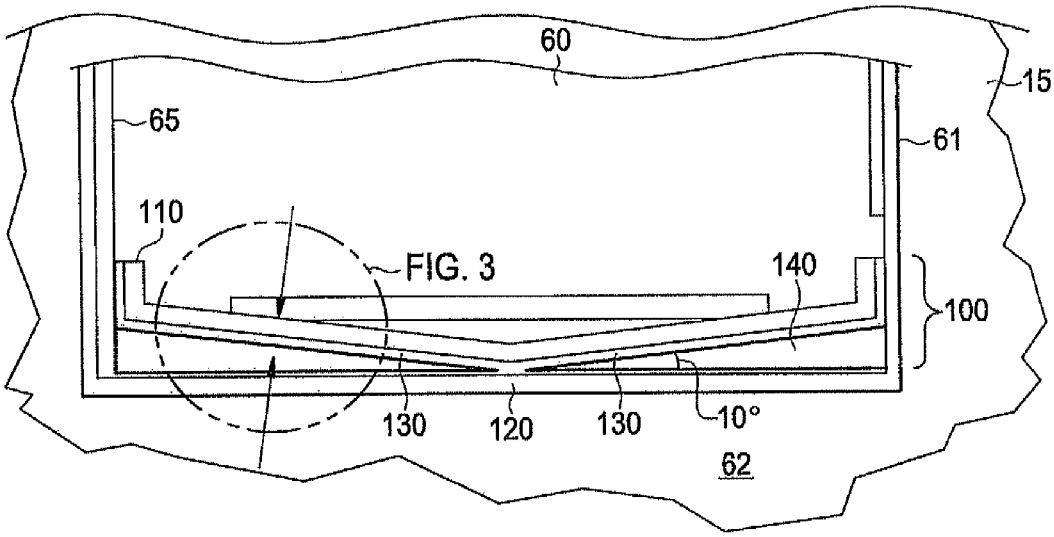

FIG. 3

CONVENTIONAL ART

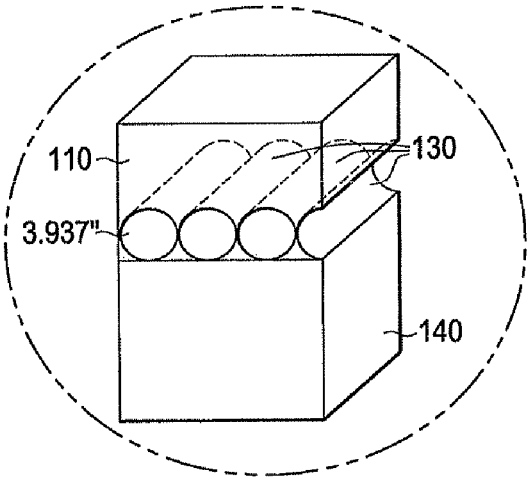

FIG. 4

CONVENTIONAL ART

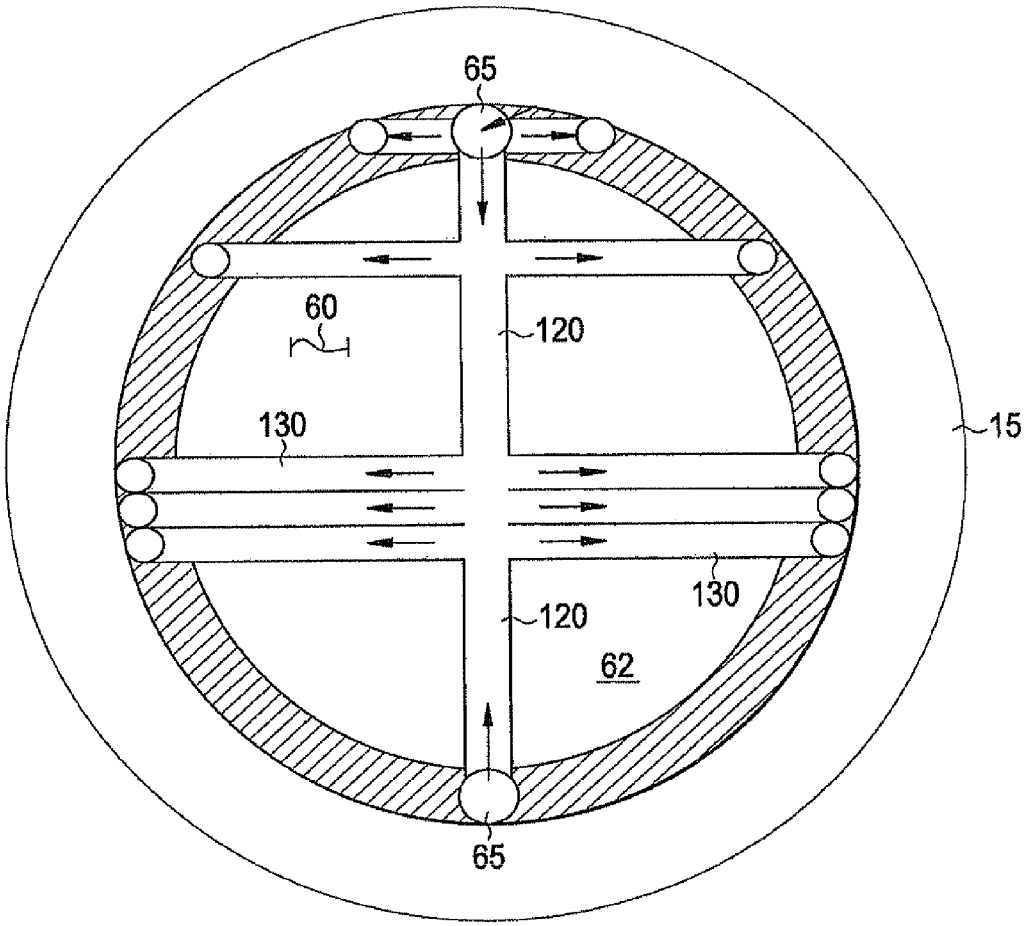

FIG. 5

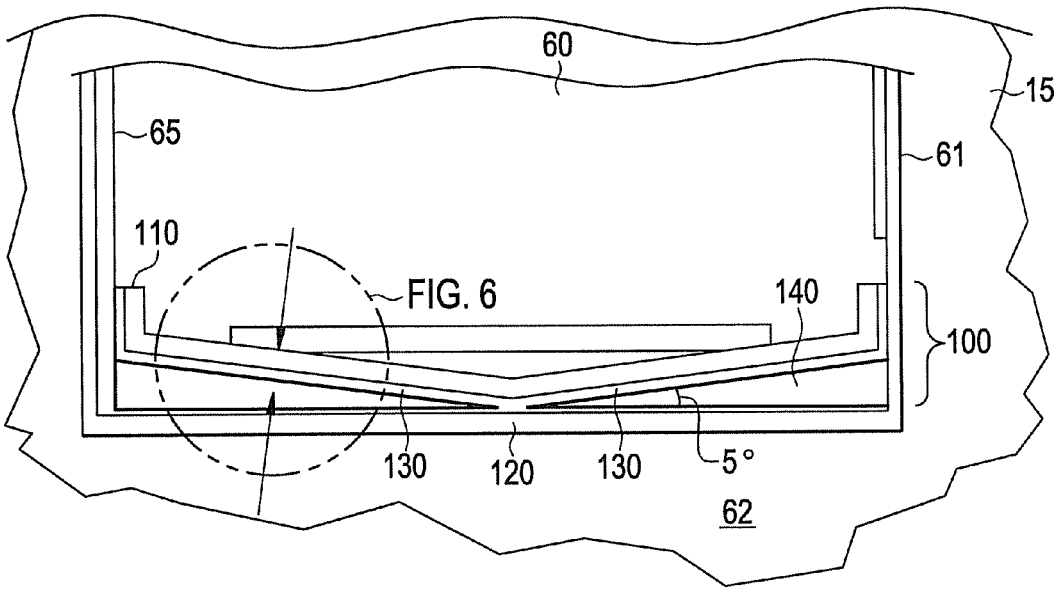

FIG. 6

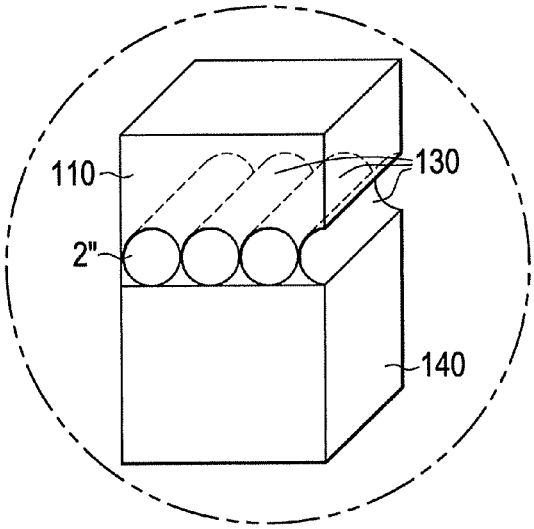

FIG. 7

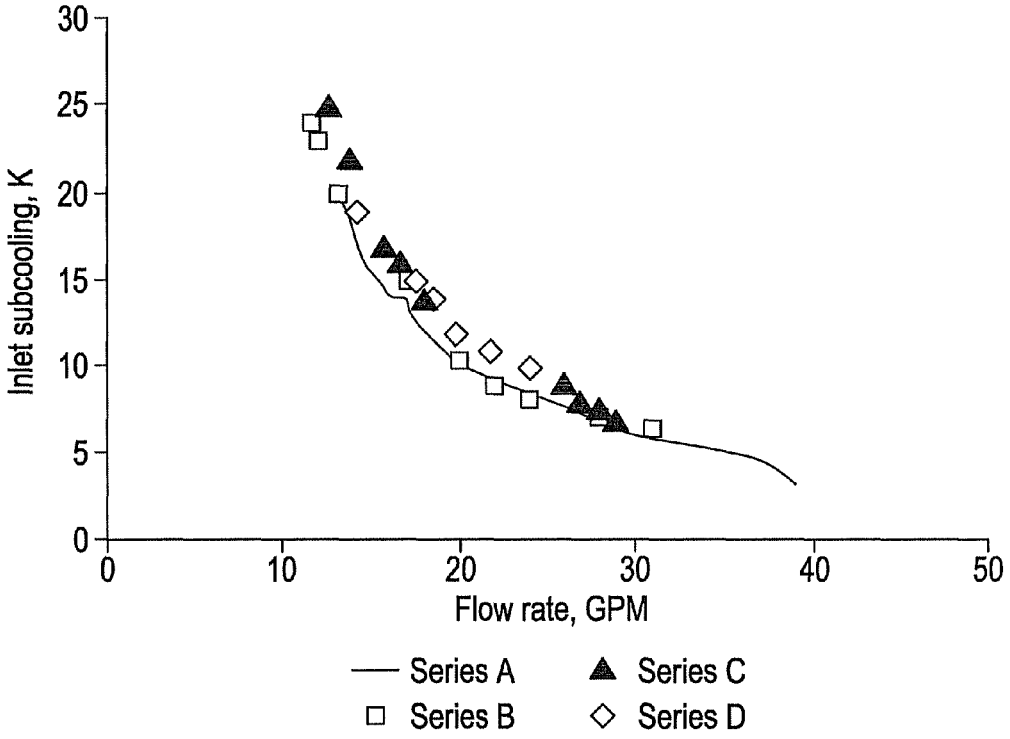
30
25
20
15
10
5
0
Inlet subcooling, K
0
10
20
30
40
50
Flow rate, GPM
Series A
Series B
Series C
Series D

NUCLEAR REACTOR MELT ARREST AND COOLABILITY DEVICE

GOVERNMENT SUPPORT

This invention was made with Government support under contract number DE-FC07-07ID14778, awarded by the U.S. Department of Energy. The Government has certain rights in the invention.

BACKGROUND

1. Field

Example embodiments generally relate to risk mitigation components used in nuclear power plants.

2. Description of Related Art

Nuclear reactors use a variety of damage prevention/mitigation devices and strategies to minimize the risk of, and damage during, unexpected plant events. An important aspect of risk mitigation is prevention of radioactive material escape into the environment. A containment building is conventionally constructed for this purpose to surround the reactor core, and several risk mitigation devices are used to ensure that the containment building is not breached during transient events.

A known damage and risk mitigation device is a Basemat-Internal Melt Arrest and Coolability device (BiMAC). A BiMAC is designed to prevent or reduce damage to the containment building in the case of a severe reactor accident involving reactor vessel breach and forceful relocation of molten core components to the containment building floor, or basemat. The ultimate purpose of the BiMAC, combined with several other layers of risk mitigation components and strategies, is to maintain containment integrity at least for 24 hours following the most probable severe nuclear plant accidents and, for known accident scenarios involving core-concrete interaction, reduce the likelihood of containment breach to 0.1% or less.

FIG. **1** is an illustration of a conventional containment building **10** cross section. Although containment **10** is shown in FIG. **1** having components and characteristics of an Economic Simplified Boiling Water Reactor (ESBWR), it is understood that components described therein are usable with other plant configurations. As shown in FIG. **1**, containment **10** includes a reactor vessel **50** containing a core **55** filled with nuclear fuel bundles. A number of control blades **56** and control blade drives may be positioned below the core **55** and may be extended into core **55** to control the nuclear reaction therein. In an ESBWR, containment **10** may also include a gravity-driven coolant system **20**, which may be a large, water-filled tank used to cool the core **55** in the event of a loss of primary coolant. Further, a suppression pool **25** may be within containment **10** and used to condense steam from vessel **50** and relieve pressure in the event of an accident.

A reinforced concrete containment vessel **15** surrounds the vessel **50** and several reactor components, so as to contain any radioactive materials that may escape from vessel **50** or other components during normal operation or during an accident. A lower drywell **60** is formed below the vessel **50** to house control blades **56**, control blade drives, and core instrumentation and to provide space for core debris in the instance of vessel **50** breach or leak. For an ESBWR, the lower drywell **60** is largely circular with a diameter of approximately 11.2 meters. A liner **61** conventionally is placed over the concrete containment wall **15** in order to reduce corrosion and damage to wall **15** in the event of an hazardous material release in containment **10**.

Basemat **62** is conventionally the lowest point of containment **10** and fabricated of similar materials as the reinforced concrete containment wall **15**, directly above the ground. A BiMAC **100** may be placed above the basemat **62** to mitigate damage to basemat **62** in the event that molten or other core **55** debris is relocated to lower drywell **60**, such as in the event of vessel **50** breach.

FIG. **2** is a detailed view of a conventional BiMAC **100** useable in ESBWRs. BiMAC **100** is described in Nuclear Regulatory Commission document NEDO-33201, Revision 2, "ESBWR DESIGN CERTIFICATION PROBABILISTIC RISK ASSESSMENT" ("NEDO-33201 Document"), which is incorporated herein by reference in its entirety. As shown in FIG. **2**, BiMAC **100** may be placed immediately above basemat **62** and/or liner **61**. Further, BiMAC **100** may line lower portions of the walls of the lower drywell **60**.

A coolant supply line **65** may be connected to and may deliver coolant material to the BiMAC **100**. Coolant may include a liquid having a high heat-absorption capacity, such as water. Coolant supply line **65** may be connected to a coolant source, and coolant may be delivered through coolant supply line **65** by a pump or other driving mechanism. Alternatively, coolant may be driven through coolant supply line **65** to BiMAC **100** by gravity alone, so as to be more fail-safe. For example, supply line **61** may be a lower drywell deluge line that connects to a pool of the gravity-driven coolant system **25** (FIG. **1**) or other pool within containment **10**. A fail-safe valve or other control mechanism, such as a squib valve, may initiate coolant flow through coolant supply line **65** to BiMAC **100** in the case of lower vessel **50** (FIG. **1**) breach or other event.

BiMAC **100** includes a distributor line **120** that may connect to the coolant supply line **65** and/or other coolant source. Distributor line **120** may extend the entire length of the drywell **60** along basemat **62**. Several parallel coolant channels **130** may extend, perpendicularly or otherwise, off of distributor line **120** at a 10-degree upward angle from the basemat. Coolant channels **130** may then extend up a portion of the lower drywell wall, where they terminate with an open end. In this way, coolant may flow into distributor line **120**, feed into each coolant channel **130**, and eventually flood into lower drywell **60**. Distributor line **120** and coolant channels **130** may be fabricated of a material that substantially maintains its physical properties in an operating and transient nuclear reactor environment. For example, distributor line **120** and coolant channels **130** may be fabricated from a zirconium-based alloy, stainless steel, etc.

An ablation shield **110** may be placed over and/or may coat coolant channels **130** and distributor line **120**. The ablation shield **110** may protect coolant channels **130** and distributor line **120** from thermal and chemical damage caused by molten core components forcefully relocating to lower drywell **60** in the event of vessel **50** breach. The ablation shield **110** may be fabricated from an inert, heat resistant, and conductive material, such as a ceramic or concrete. Additional shielding material **140** may be placed adjacent to coolant channels **130** to support the weight of core components relocated on top of BiMAC **100** during a vessel breach event. Additional shielding material **140** may be fabricated of a number of strong materials, such as concrete, ceramics, etc.

FIG. **3** is a detailed cross-sectional view of the coolant channels **130** of BiMAC **100**. As shown in FIG. **3**, channels **130** may be parallel and touch, so as to form a continuous wedge-shaped jacket of channels **130** capable of cooling the BiMAC and materials relocated thereon. Each channel **130** is 3.937 inches in inner diameter to provide sufficient coolant flow therethrough, as approved in the NEDO-33201 docu-

ment. Ablation shield **110** may be formed directly atop and cover each channel **130**, in order to provide heat conduction and cooling therethrough. Ablation shield **110** may be formed to different thicknesses than that shown in FIG. **3**, depending on the material used to fabricate ablation shield **110** and the characteristics of the material to be cooled on top of ablation shield **110**.

FIG. **4** is a top-down perspective view of BiMAC **100** illustrating operation of BiMAC **100** during an accident scenario. As shown in FIG. **4**, during an initiating event, a valve is opened, permitting coolant flow down through a coolant supply line **65** to distribution line **120**. Coolant flows into either end of distribution line **120** and then into coolant channels **130** up at a 10-degree angle toward walls **15**. As molten or other hot debris is relocated to the lower drywell on top of an ablation shield **110** covering coolant channels **130**, forced coolant flow through coolant channels **130** removes heat from the relocated debris, preventing continued melt and/or damage to basemat **62** and containment walls **15**. Coolant exits the coolant channels **130** at a higher open end point of each channel **130**, eventually flooding the lower drywell **60** and further aiding in cooling debris therein. As such, open end points of each channel **130** are typically located such that relocated debris cannot clog the channels **130**. Further, if coolant flow to BiMAC **100** is provided by gravity, coolant flow and cooling may continue even if other plant mechanical systems fail that would otherwise be required to pump coolant into BiMAC **100**, resulting in continuous, natural-circulation cooling.

The structure and function of BiMAC **100** described in FIGS. **1-4** has been extensively tested and submitted for approval to the Nuclear Regulatory Commission with dimensions of 3.937 inch inner diameter for coolant channels **130** and a 10-degree incline for coolant channels **130** with respect to basemat **62** in an ESBWR having an 11.2 meter diameter lower drywell **60**.

SUMMARY

Example embodiments provide a Basemat-Internal Melt Arrest and Coolability device (BiMAC) that offers improved spatial and mechanical characteristics for use in damage prevention and risk mitigation in accident scenarios. Example embodiments may include a BiMAC having an inclination of less than 10-degrees from the basemat floor and/or coolant channels of less than 4 inches in diameter, while maintaining minimum safety margins required by the Nuclear Regulatory Commission.

BRIEF DESCRIPTIONS OF THE DRAWINGS

Example embodiments will become more apparent by describing, in detail, the attached drawings, wherein like elements are represented by like reference numerals, which are given by way of illustration only and thus do not limit the example embodiments herein.

FIG. **1** is an illustration of a schematic of a conventional containment building for a nuclear reactor.

FIG. **2** is an illustration of a conventional lower drywell and Basemat-Internal Melt Arrest and Coolability device.

FIG. **3** is a detailed view of a conventional Basemat-Internal Melt Arrest and Coolability device.

FIG. **4** is another view of a conventional Basemat-Internal Melt Arrest and Coolability device.

FIG. **5** is an illustration of an example embodiment Basemat-Internal Melt Arrest and Coolability device.

FIG. **6** is a detail view of an example embodiment Basemat-Internal Melt Arrest and Coolability device.

FIG. **7** is a graph of experimental results showing example embodiment Basemat-Internal Melt Arrest and Coolability device compliance with performance criteria.

DETAILED DESCRIPTION

Detailed illustrative embodiments of example embodiments are disclosed herein. However, specific structural and functional details disclosed herein are merely representative for purposes of describing example embodiments. For example, although example embodiments may be described with reference to an Economic Simplified Boiling Water Reactor (ESBWR), it is understood that example embodiments may be useable in other types of nuclear plants and in other technological fields. The example embodiments may be embodied in many alternate forms and should not be construed as limited to only example embodiments set forth herein.

It will be understood that, although the terms first, second, etc. may be used herein to describe various elements, these elements should not be limited by these terms. These terms are only used to distinguish one element from another. For example, a first element could be termed a second element, and, similarly, a second element could be termed a first element, without departing from the scope of example embodiments. As used herein, the term "and/or" includes any and all combinations of one or more of the associated listed items.

It will be understood that when an element is referred to as being "connected," "coupled," "mated," "attached," or "fixed" to another element, it can be directly connected or coupled to the other element or intervening elements may be present. In contrast, when an element is referred to as being "directly connected" or "directly coupled" to another element, there are no intervening elements present. Other words used to describe the relationship between elements should be interpreted in a like fashion (e.g., "between" versus "directly between", "adjacent" versus "directly adjacent", etc.).

The terminology used herein is for the purpose of describing particular embodiments only and is not intended to be limiting of example embodiments. As used herein, the singular forms "a", "an" and "the" are intended to include the plural forms as well, unless the language explicitly indicates otherwise. It will be further understood that the terms "comprises", "comprising,", "includes" and/or "including", when used herein, specify the presence of stated features, integers, steps, operations, elements, and/or components, but do not preclude the presence or addition of one or more other features, integers, steps, operations, elements, components, and/or groups thereof.

The inventors have recognized that a BiMAC having a decreased height, and additional volume of lower drywell **60** created by the lower height, may improve accident mitigation in certain cases of core melting and relocation to drywell **60**, including scenarios where the relocation occurs rapidly and under very high pressure. A BiMAC having a lower height will have a smaller surface area and coolant channel length, potentially providing greater protection against damage from crushing and explosive forces experienced in the instance of high-pressure vessel rupture onto the BiMAC. A BiMAC having a lower height will have a more horizontal, and less "wedged" surface, potentially reducing natural convection currents in coolant channels subject to the greatest heat flux loads at edges of conventional BiMAC **100**. Additionally, the

inventors have recognized that the lower height permits smaller internal channels, offering improved crushing protection.

Further, the inventors have recognized that a larger lower drywell volume may better accommodate and contain larger amounts of caustic, radioactive molten core and plant components and reduce the likelihood of materials being relocated to other, less confined areas of containment **10**. The inventors have further recognized that additional volume in lower drywell **60** may permit greater access to lower drywell **60** for maintenance of control rod drives and instrumentation housed in lower drywell **60**.

FIG. **5** illustrates an example embodiment BiMAC **200**, and FIG. **6** is a detailed cross-sectional view of example embodiment BiMAC **200**. Example embodiment BiMAC **200** may share several features with conventional BiMAC **100** described in FIGS. **1-4**, with like reference numbers indicating like features, whose redundant description is omitted. As shown in FIG. **5**, coolant channels **130** are inclined at less than 10 degrees, such as at approximately 5 degrees, in example embodiment BiMAC **200**. As shown in FIG. **6**, coolant channels **130** may have a reduced inner diameter of less than 4 inches, such as approximately 2 inches. For a lower drywell **60** with an 11.2 meter diameter, example embodiment BiMAC **200** has a maximum coolant channel **130** length of approximately 5.62 meters, compared to a maximum coolant channel **130** length of approximately 5.69 meters in conventional BiMAC **100** having a 10-degree incline. Thus, example embodiment BiMAC **200** has a lower surface area, and will experience less loading strain, than conventional BiMAC **100**.

Also, example embodiment BiMAC **200** has a maximum height of about 0.49 meters, compared to conventional BiMAC **100** that is about 0.99 meters high. Thus, example embodiment BiMAC **200** frees approximately half a meter of vertical space in the lower drywell **60** compared to conventional BiMAC **100**, because of the approximate 5-degree coolant channel incline. Further example embodiment BiMAC **200**, having a lower and more level floor, is useable with a wider variety of ablation shield **110** materials, including poured concrete, which may benefit from a level pouring surface.

While example embodiment BiMAC **200** possesses several spatial and mechanical advantages over conventional BiMAC **100**, there was no expectation that example embodiment BiMAC **200** would successfully function in the same accident scenarios used to test and certify conventional BiMACs in the related art. Only the conventional 10-degree BiMAC **100** has known functionality in molten core relocation accident scenarios. In fact, the NEDO-33201 Document shows that a BiMAC having greater than 10-degree incline with more than 4-inch diameter coolant channels would be required for such an accident scenario in conventional ESBWR commercial power plants. Thus, the inventors subjected example embodiment BiMAC **200**, having less than 10-degree incline and 4-degree diameters, to lengthy testing to ensure cooling and risk mitigation functionality.

A model of example embodiment BiMAC **200**, having an approximately 5-degree incline and 2-inch inner diameter coolant channel **130** as shown in FIGS. **5** and **6**, was constructed and subject to thermal loads encountered in the same scenarios discussed in the NEDO-33201 Document. Specifically, central coolant channels **130** were subjected to an average thermal load of 100 kW/m^2 with local peaking loads of 125 kW/m^2; coolant channels **130** near edges of example embodiment BiMAC **200** were subjected to an average heat load of 100 kW/m^2 with local peaking loads of 300 kW/m^2; and portions coolant channel **130** extending vertically upward in example embodiment BiMAC **200** were subject to an average heat load of 320 kW/m^2 with local peaking loads of 450 kW/m^2. Heating was supplied by electric-powered copper cartridge and band heaters.

Criteria measuring sustainability and failure of example embodiment BiMAC **200** included instantaneous flow rates in each coolant channel **130**, temperature of coolant channels **130**, coolant pressure drop through coolant channels **130**, and coolant void fraction at open end of coolant channels **130**, through which coolant exited. Heat loads and coolant flow were applied over the course of 10 hours to ascertain sustainability.

Results of the testing indicated that required thermal load absorption was maintained throughout the experiment involving example embodiment BiMAC **200**. No flow instability, changes in pressure distribution, or complete voiding were experienced in the experiment. Further, complete voiding and burnout within coolant channels **130** could not be achieved in the experiment, even when effectively doubling the thermal loads discussed above. FIG. **7** is a graph illustrating these beneficial and unexpected results of example embodiment BiMAC **200**. FIG. **7** illustrates inlet sub-cooling temperature (K) at inlet channel **64** as a function of flow rate (GPM) through all coolant channels **130** in example embodiment BiMAC **200**. Four test series A-D were run, with point heat loads ranging from approximately 50 to 60 kW applied to the BiMAC surface. As shown in FIG. **7**, example embodiment BiMAC **200** handled all heat loads with little variation in performance, including no dry-out, reflecting the improved they and hydro-dynamic properties of the BiMAC **200** discussed above.

Thus, the inventors have determined that example embodiment BiMACs having inclination of less than 10 degrees and more than about 5 degrees and coolant channel **130** having inner diameters of less than 4 inches and more than approximately 2 inches can adequately provide cooling and melt arrest in the same accident scenarios addressed by conventional BiMAC **100**, while increasing free space in lower drywell **60** and reducing material stress and fatigue over conventional BiMAC **100**.

Example embodiments thus being described, it will be appreciated by one skilled in the art that example embodiments may be varied through routine experimentation and without further inventive activity. Variations are not to be regarded as departure from the spirit and scope of the exemplary embodiments, and all such modifications as would be obvious to one skilled in the art are intended to be included within the scope of the following claims.

What is claimed is:

1. A Basemat-Internal Melt Arrest and Coolability device (BiMAC), comprising:

a distributor configured to receive a coolant; and

a plurality of adjacent coolant channels connected to the distributor at a first end of the channels and configured to receive the coolant from the distributor,

each of the channels having an inclination equal to or greater than about 5 degrees and less than 10 degrees with respect to horizontal,

each of the channels having a second end with a vertical portion, the second end being open and configured to permit the coolant to exit,

the BiMAC configured to absorb a thermal load of at least 100 kW/m2 from molten debris relocated on top of the BiMAC for at least 24 hours,

wherein each of the coolant channels are configured to not completely void a liquid coolant flowing through the coolant channel during the 24 hours.

2. The BiMAC of claim **1**, wherein each of the channels has an inner diameter of about 2 inches.

3. The BiMAC of claim **2**, wherein each of the channels has an inclination of about 5 degrees with the horizontal.

4. The BiMAC of claim **1**, further comprising:

an ablation shield covering the distributor and the plurality of coolant channels.

5. The BiMAC of claim **4**, wherein the ablation shield is fabricated of at least one of a ceramic material and concrete.

6. The BiMAC of claim **1**, further comprising:

a shielding material under the plurality of coolant channels, the shielding material supporting the plurality of coolant channels.

7. The BiMAC of claim **1**, wherein the distributor is connected to a deluge line of an economic simplified boiling water reactor in order to receive coolant from the deluge line.

8. The BiMAC of claim **1**, wherein the BiMAC is shaped to cover a basemat of a lower drywell and at least a portion of a wall of a lower drywell.

9. A Basemat-Internal Melt Arrest and Coolability device (BiMAC), comprising:

a plurality of adjacent coolant channels having an inclination equal to or greater than about 5 degrees and less than 10 degrees with respect to horizontal,

the BiMAC configured to absorb a thermal load of at least 100 kW/m2 from molten debris relocated on top of the BiMAC for at least 24 hours,

wherein each of the coolant channels are configured to not completely void a liquid coolant flowing through the coolant channel during the 24 hours.

10. The Bi MAC of claim **9**, wherein the inclination is about 5 degrees with the horizontal.

11. The BiMAC of claim **10**, wherein each of the coolant channels has an inner diameter of about 2 inches.

12. The BiMAC of claim **11**, further comprising:

a distributor configured to receive the coolant, the plurality of coolant channels connected to the distributor at a first end of the channels and configured to receive the coolant from the distributor, each of the channels having a second end with a vertical portion, the second end being open and configured to permit the coolant to exit.

13. The BiMAC of claim **12**, further comprising:

an ablation shield covering the distributor and the plurality of coolant channels.

14. The BiMAC of claim **13**, wherein the ablation shield is fabricated of at least one of a ceramic material and concrete.

15. The BiMAC of claim **14**, further comprising:

a shielding material under the plurality of coolant channels, the shielding material configured to support the plurality of coolant channels.

* * * * *