US009119438B2

(12) **United States Patent**
Auger et al.

(10) **Patent No.: US 9,119,438 B2**
(45) **Date of Patent: Sep. 1, 2015**

(54) **SOLE MEMBER FOR AN ARTICLE OF FOOTWEAR**

(75) Inventors: **Perry W. Auger**, Tigard, OR (US); **Andrew Caine**, Portland, OR (US); **Sergio Cavaliere**, Venice (IT)

(73) Assignee: **NIKE, Inc.**, Beaverton, OR (US)

(*) Notice: Subject to any disclaimer, the term of this patent is extended or adjusted under 35 U.S.C. 154(b) by 844 days.

(21) Appl. No.: **13/311,070**

(22) Filed: **Dec. 5, 2011**

(65) **Prior Publication Data**

US 2013/0139412 A1 Jun. 6, 2013

(51) **Int. Cl.**

A43B 13/14	(2006.01)
A43B 13/02	(2006.01)
A43B 13/22	(2006.01)
A43B 13/26	(2006.01)
A43B 1/00	(2006.01)
A43B 7/14	(2006.01)
A43B 13/12	(2006.01)
A43B 5/02	(2006.01)
A43B 23/22	(2006.01)

(52) **U.S. Cl.**

CPC ***A43B 13/026*** (2013.01); ***A43B 1/0009*** (2013.01); ***A43B 5/02*** (2013.01); ***A43B 7/141*** (2013.01); ***A43B 7/142*** (2013.01); ***A43B 7/143*** (2013.01); ***A43B 7/144*** (2013.01); ***A43B 7/1425*** (2013.01); ***A43B 7/1435*** (2013.01); ***A43B 13/12*** (2013.01); ***A43B 13/223*** (2013.01); ***A43B 13/26*** (2013.01); ***A43B 23/222*** (2013.01)

(58) **Field of Classification Search**

CPC .. A43B 13/026; A43B 13/141; A43B 13/223; A43B 13/26; A43B 13/184; A43B 13/227; A43B 5/02; A43C 15/168

See application file for complete search history.

(56) **References Cited**

U.S. PATENT DOCUMENTS

3,341,952	A *	9/1967	Dassler	36/128
4,096,649	A *	6/1978	Saurwein	36/32 R
4,454,662	A *	6/1984	Stubblefield	36/91
5,452,526	A	9/1995	Collins	
5,461,801	A *	10/1995	Anderton	36/114
5,545,463	A	8/1996	Schmidt et al.	
5,679,439	A	10/1997	Schmidt et al.	
7,181,868	B2	2/2007	Auger et al.	
RE40,474	E	9/2008	Quellais et al.	
7,437,838	B2	10/2008	Nau	
7,533,477	B2	5/2009	Goodwin et al.	
7,832,117	B2	11/2010	Auger et al.	

(Continued)

FOREIGN PATENT DOCUMENTS

FR	2794005	12/2000
FR	2914156	10/2008
GB	2256784	12/1992

OTHER PUBLICATIONS

International Search Report and Written Opinion mailed Mar. 12, 2013 in International Application No. PCT/US2012/066315.

(Continued)

Primary Examiner — Ted Kavanaugh

(74) *Attorney, Agent, or Firm* — Plumsea Law Group, LLC

(57) **ABSTRACT**

A sole member for an article of footwear includes a composite sole structure and a reinforcing member. The sole structure may comprise two layers of woven composite material. The two layers have substantially similar woven patterns. The sole structure includes bulging portions with centrally recessed portions. The reinforcing member fits into channels associated with the bulging portions.

23 Claims, 15 Drawing Sheets

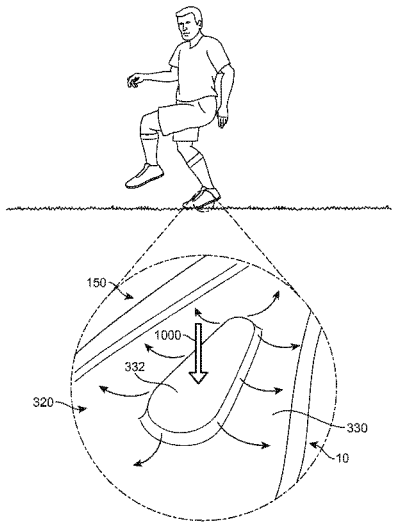

(56) **References Cited**

U.S. PATENT DOCUMENTS

2002/0178619	A1*	12/2002	Schaudt et al.	36/128
2003/0172548	A1	9/2003	Fuerst	
2004/0154192	A1	8/2004	Bengtsson et al.	
2007/0107267	A1	5/2007	Hodgson	
2009/0320330	A1	12/2009	Borel et al.	
2010/0251565	A1	10/2010	Litchfield et al.	
2011/0088287	A1*	4/2011	Auger et al.	36/107
2011/0107622	A1	5/2011	Schwirian	
2011/0289801	A1*	12/2011	Amos et al.	36/134

OTHER PUBLICATIONS

Chinese Office Action dated Jul. 6, 2015 in Chinese Patent Application No. 201280059629.2.

* cited by examiner

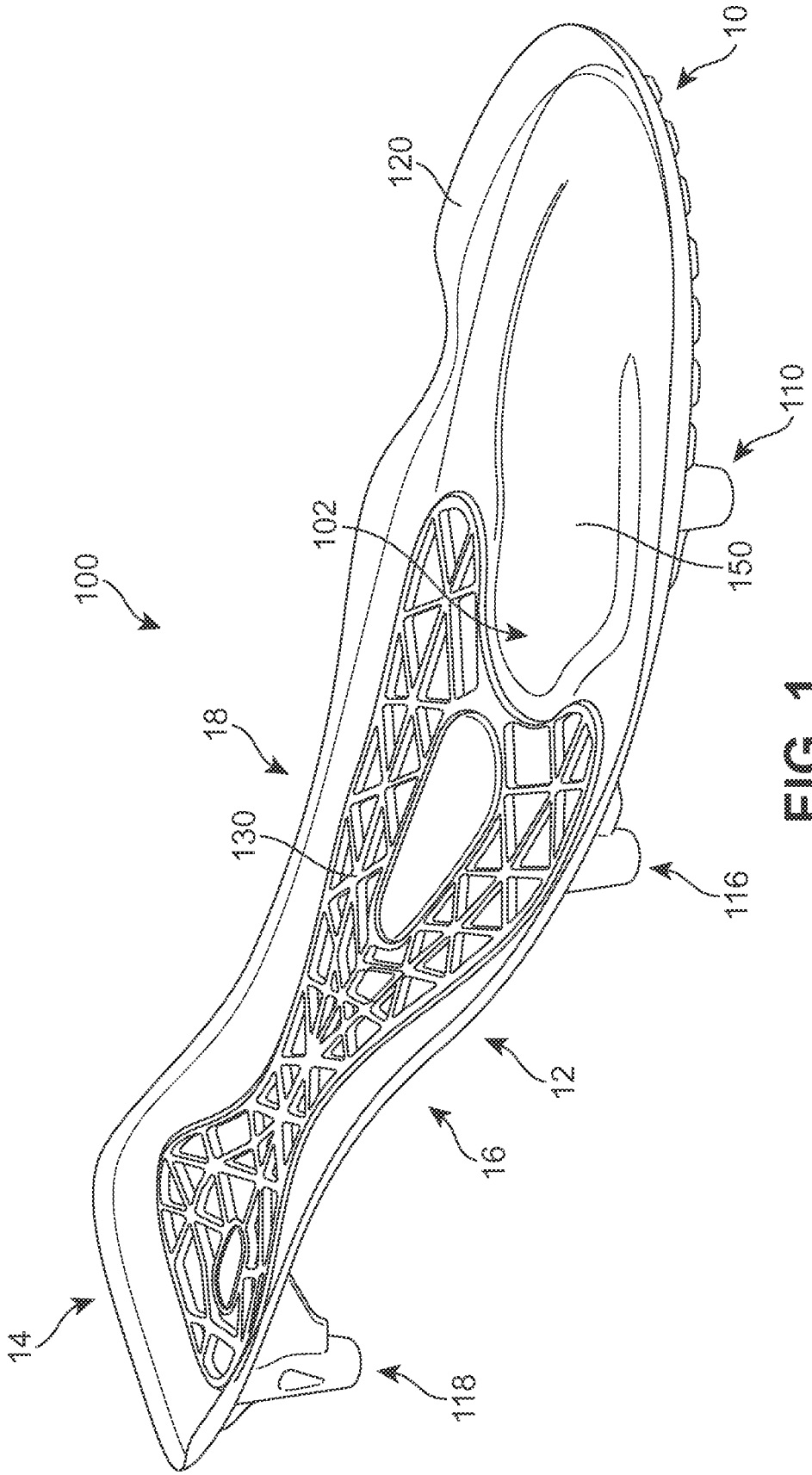

FIG. 1

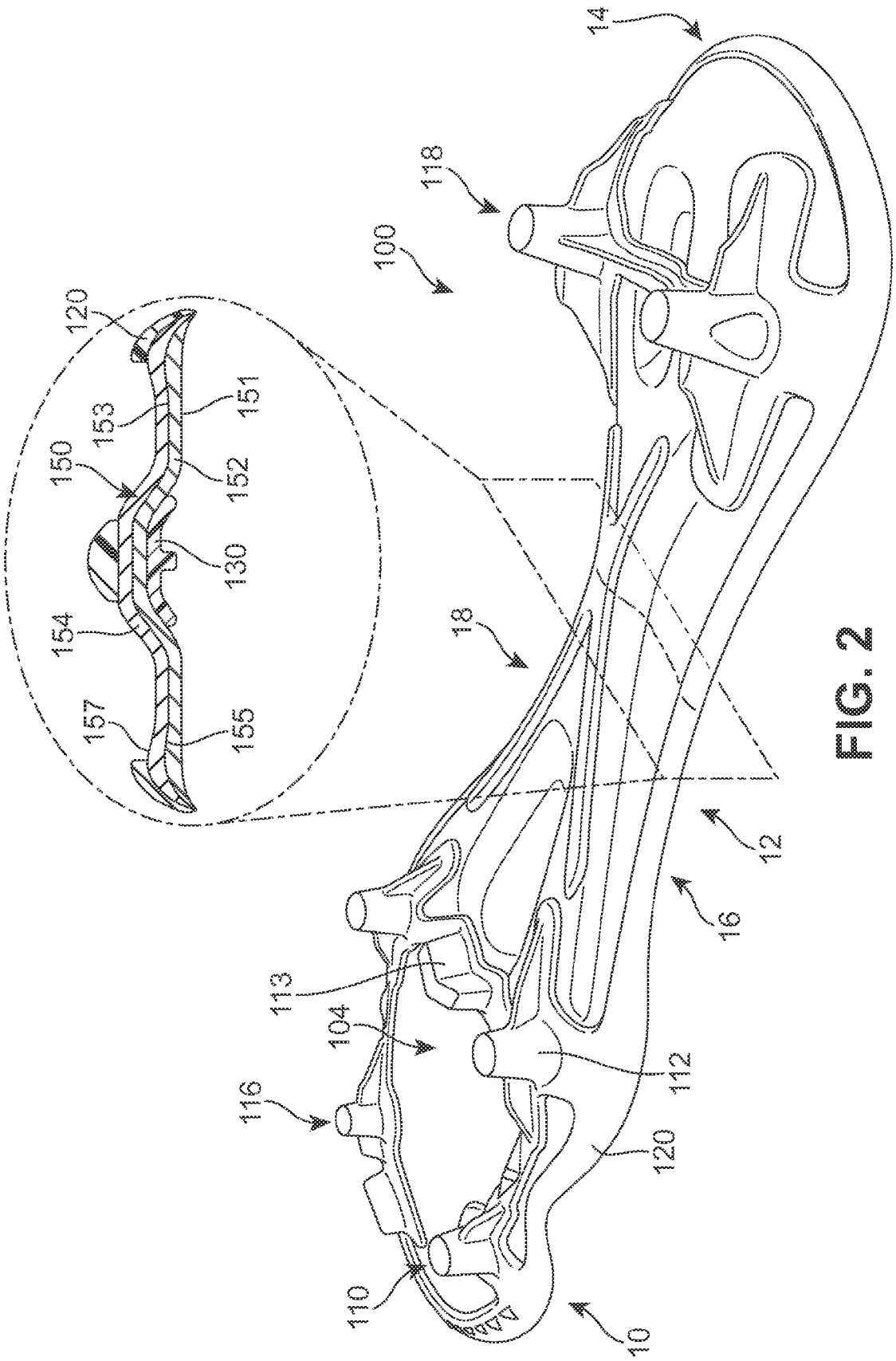
14
118
100
120
151
153
150
152
130
154
157
155
18
12
16
113
104
112
116
120
110
10

FIG. 2

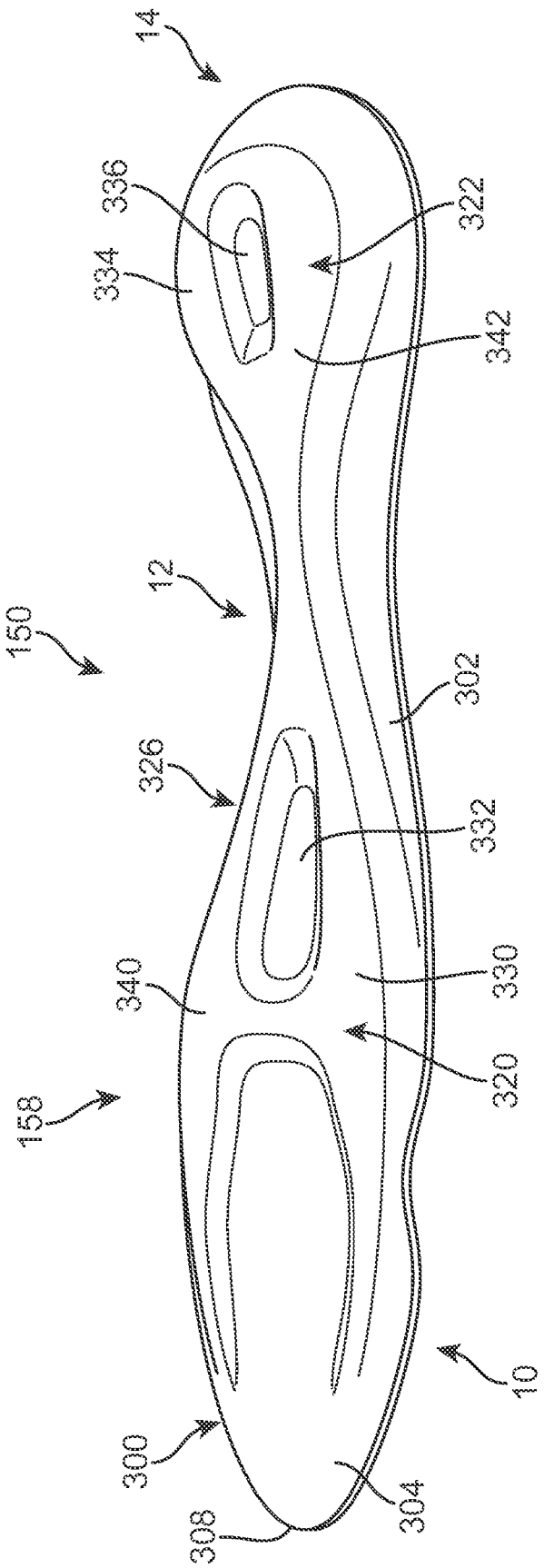
14
336
334
322
342
12
150
302
326
332
340
330
158
320
10
300
304
308

FIG. 3

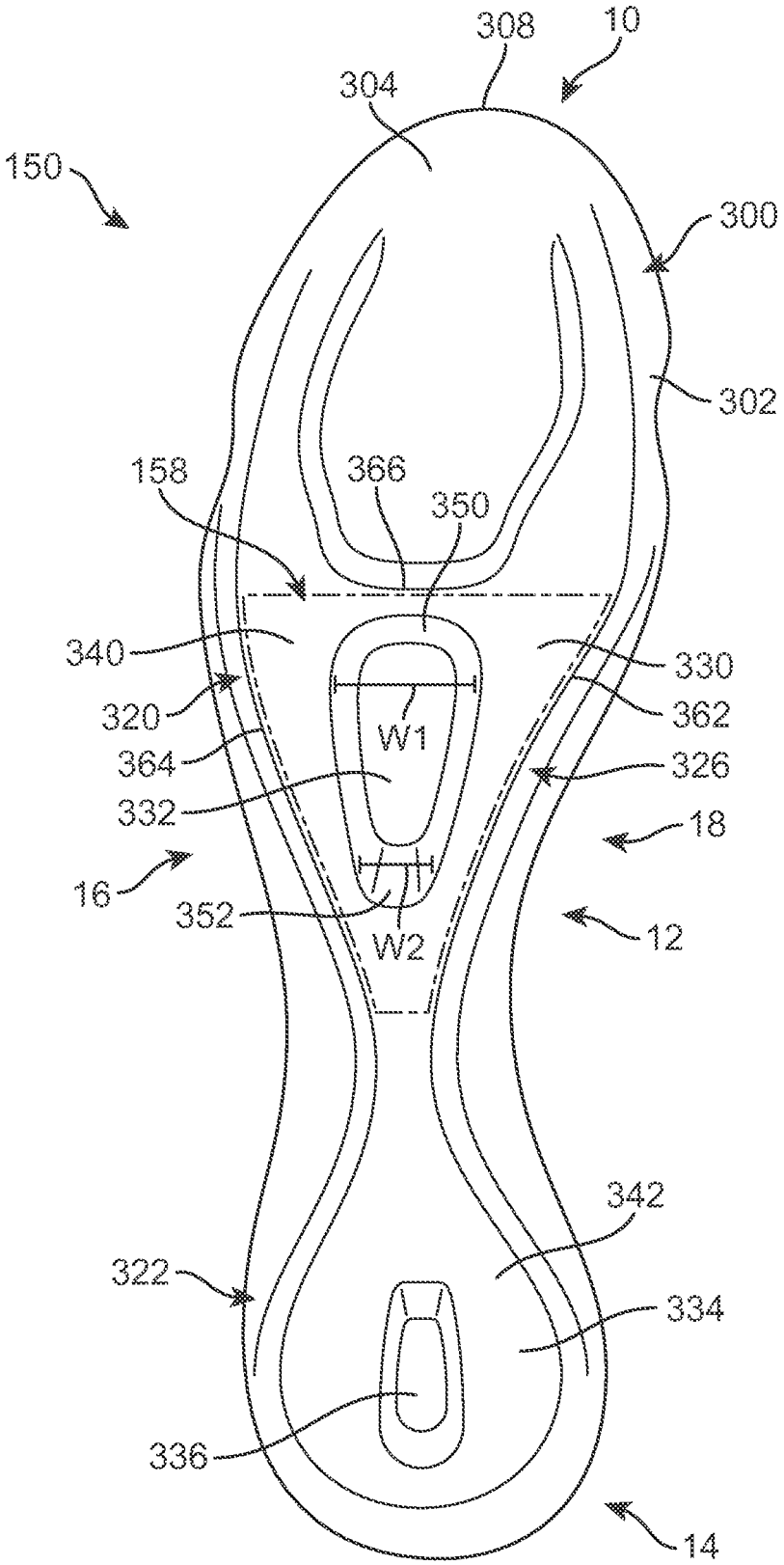
308
10
304
150
300
302
158
366
350
340
330
320
362
W1
364
326
332
18
16
352
12
W2
342
322
334
336
14

FIG. 4

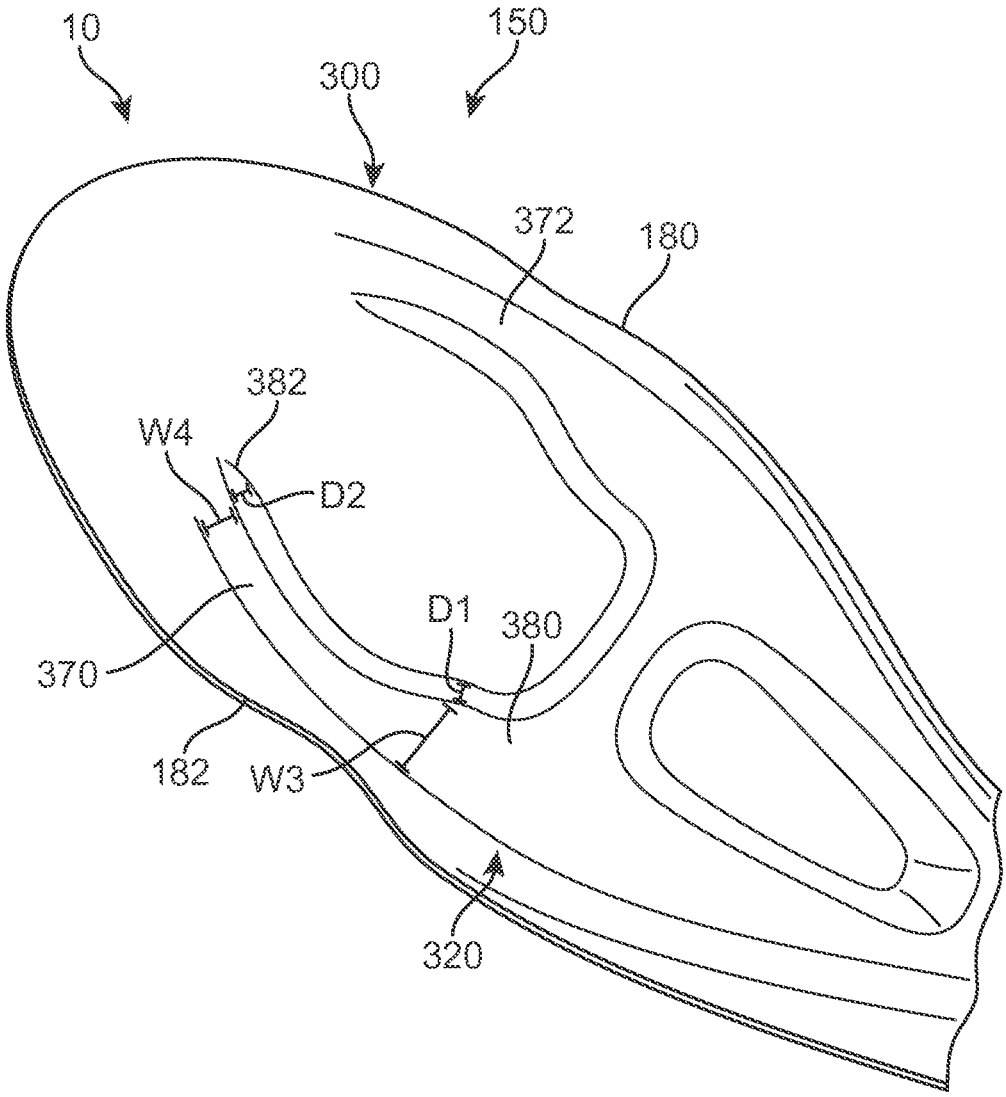

FIG. 5

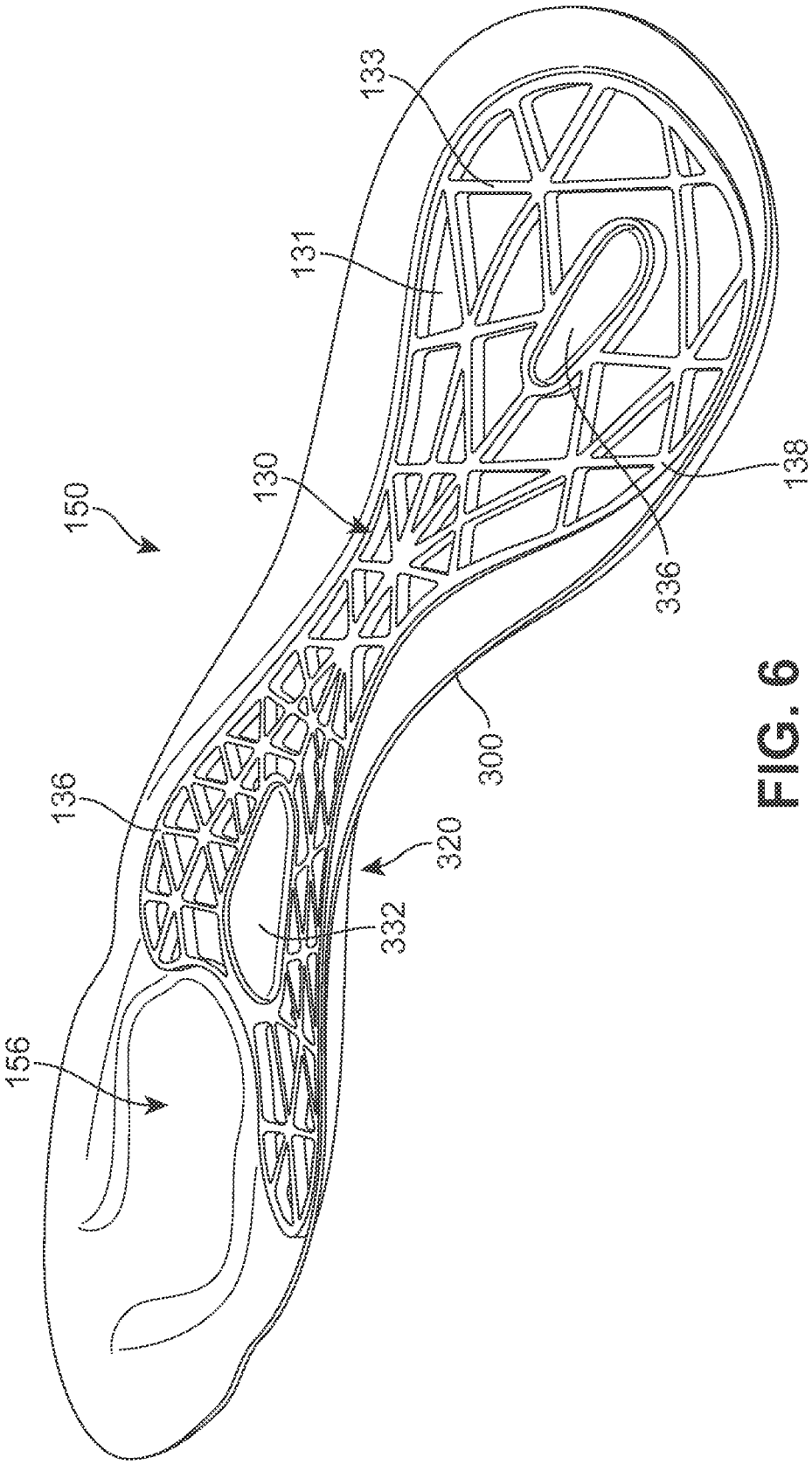

FIG. 6

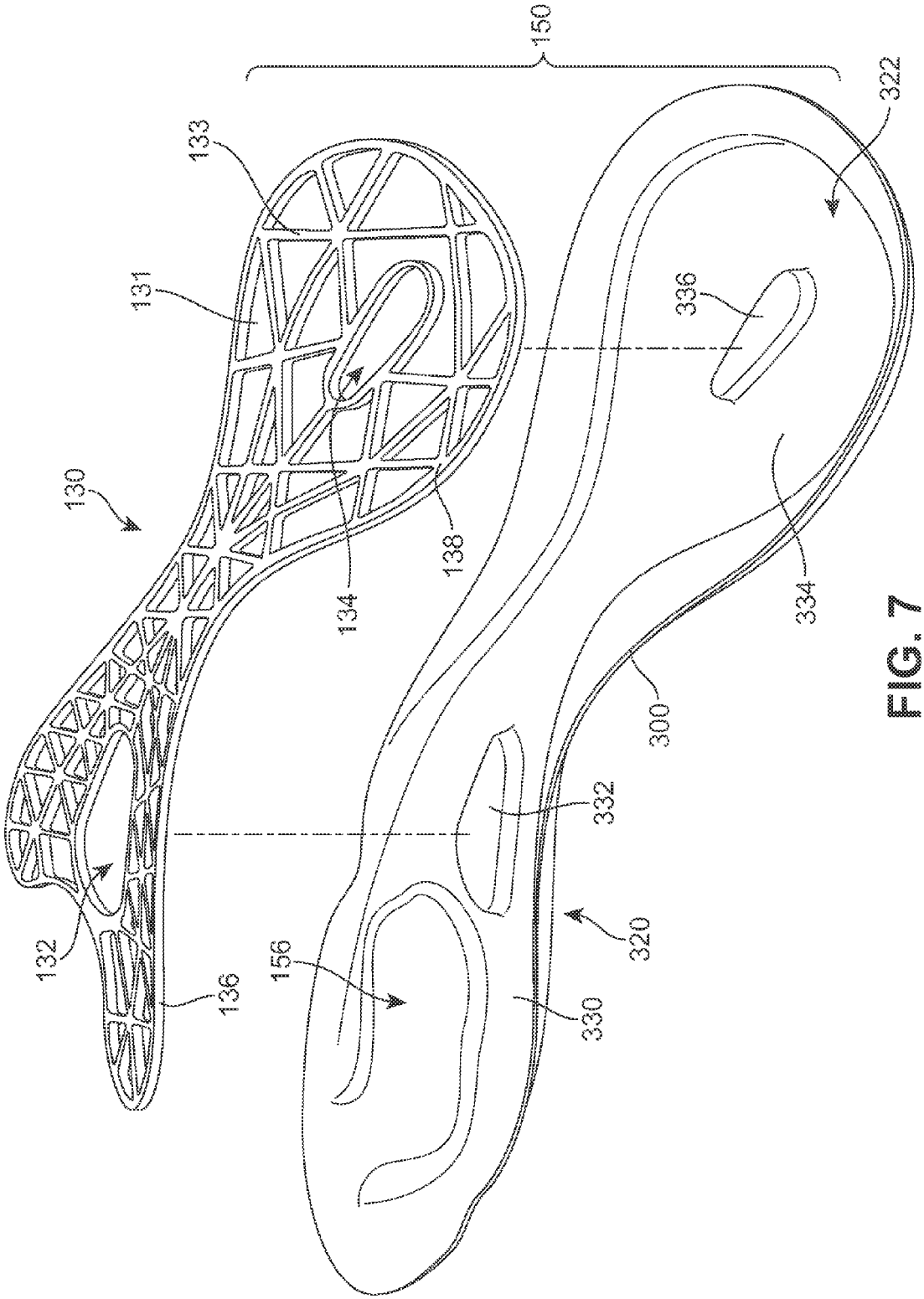

FIG. 7

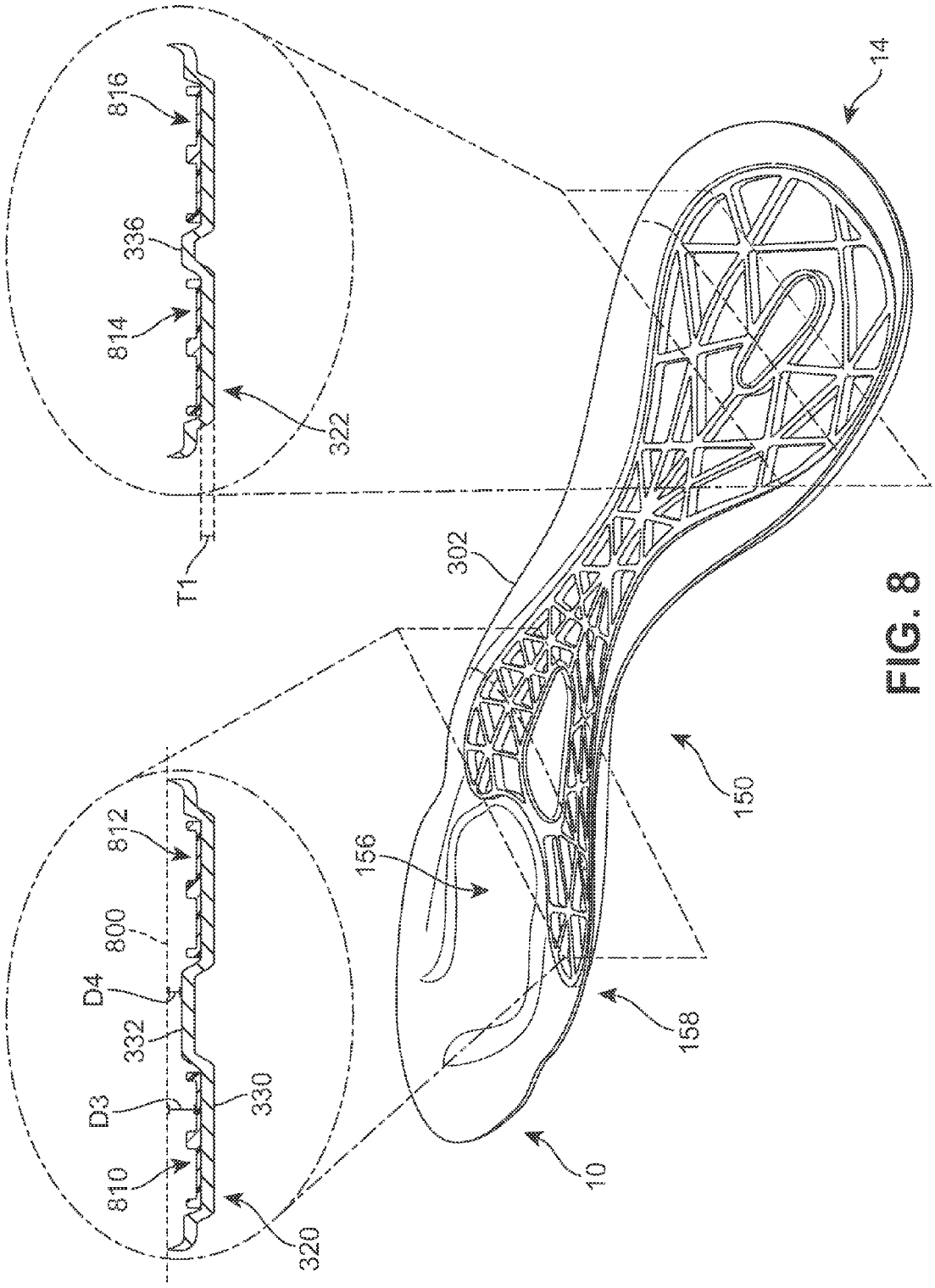
14
816
336
814
322
T1
302
156
150
158
10
812
800
D4
332
D3
330
810
320

FIG. 8

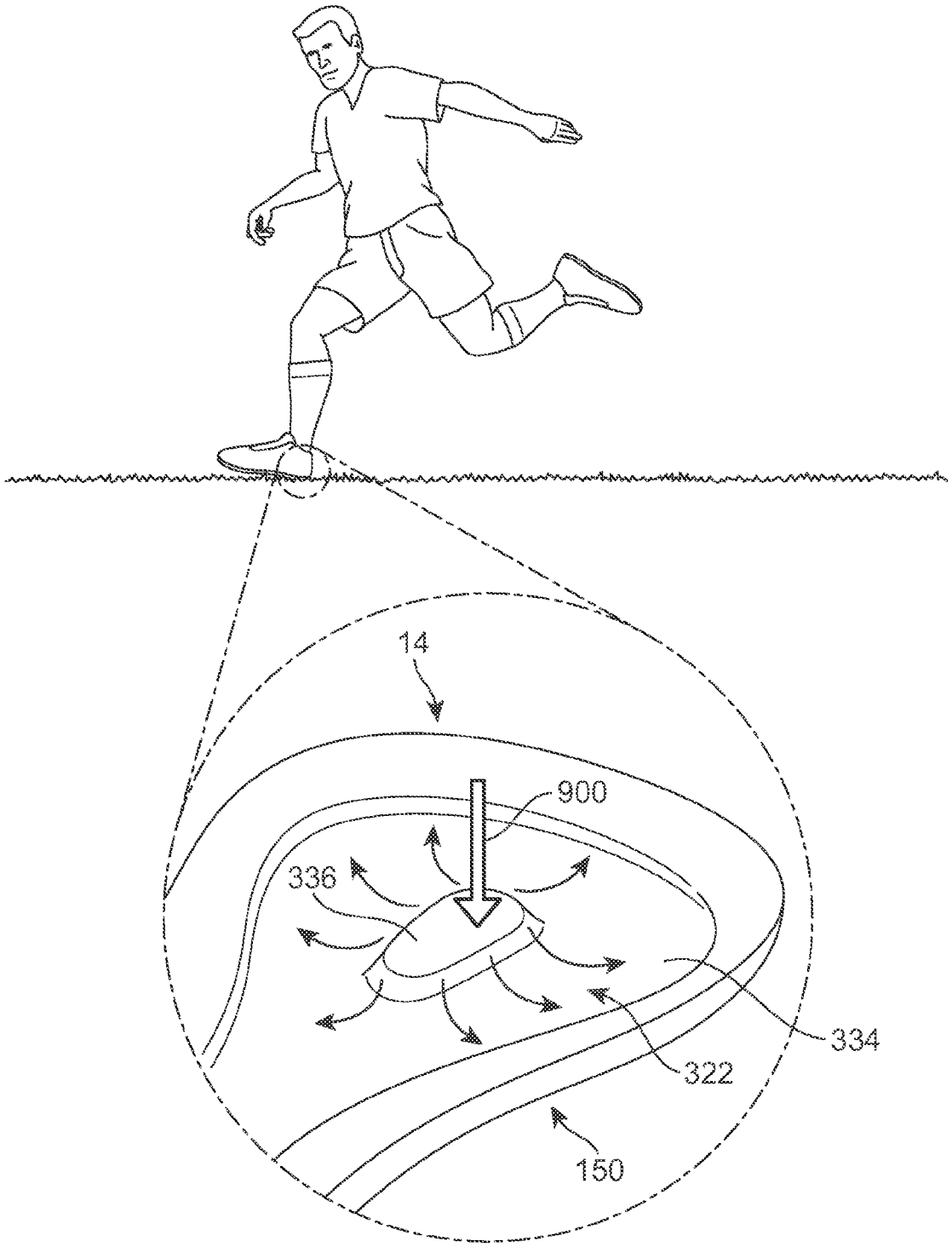

FIG. 9

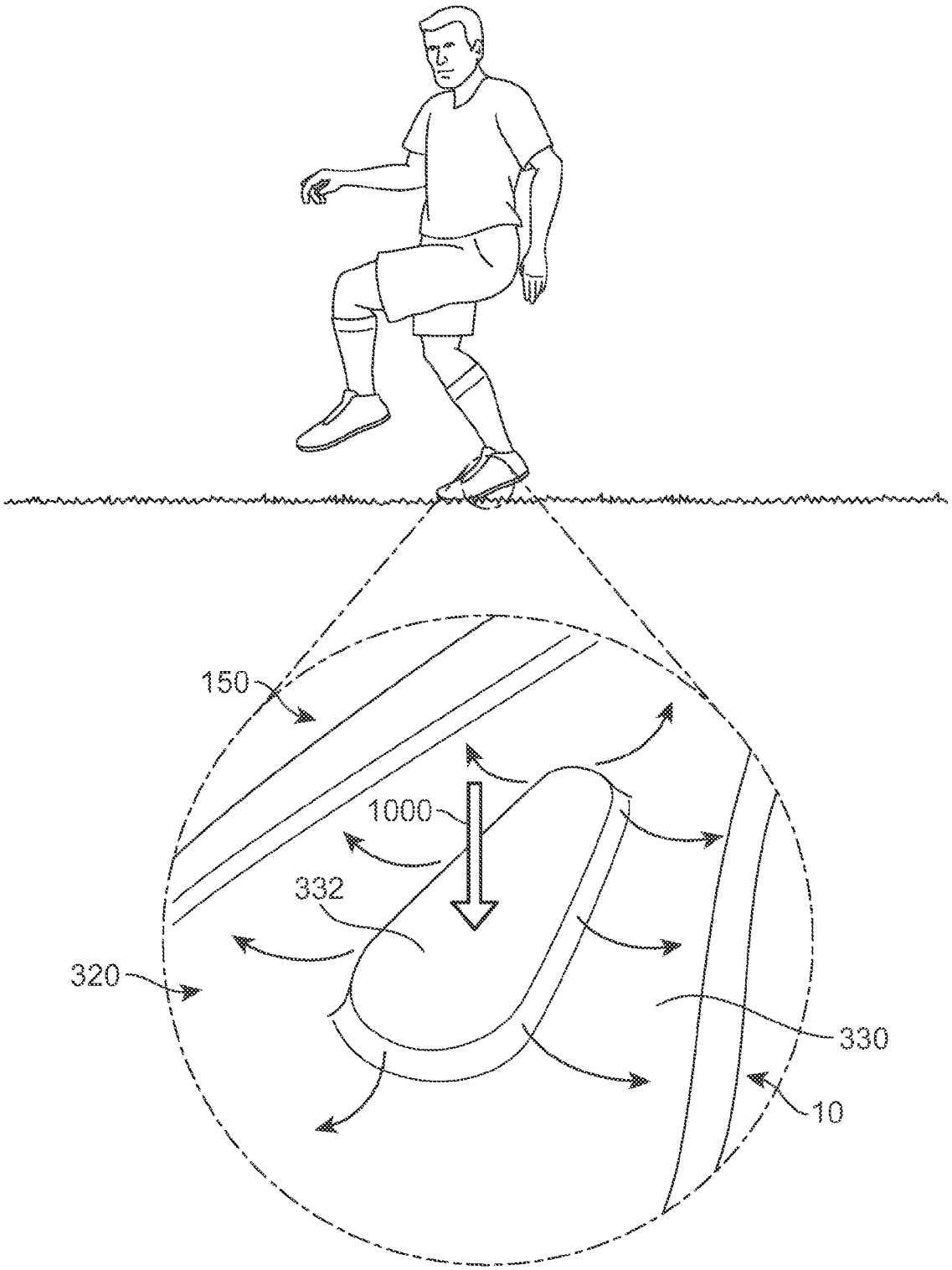

FIG. 10

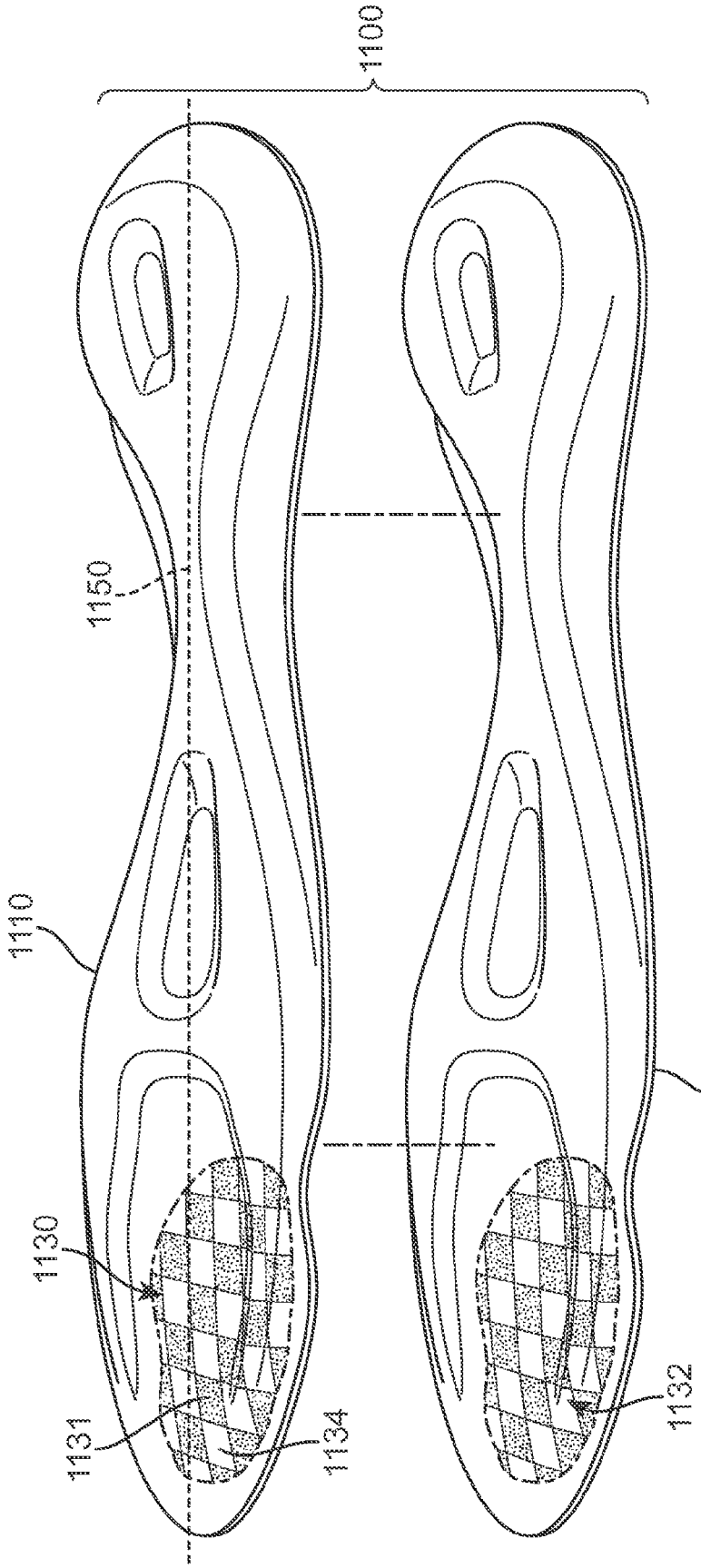

FIG. 11

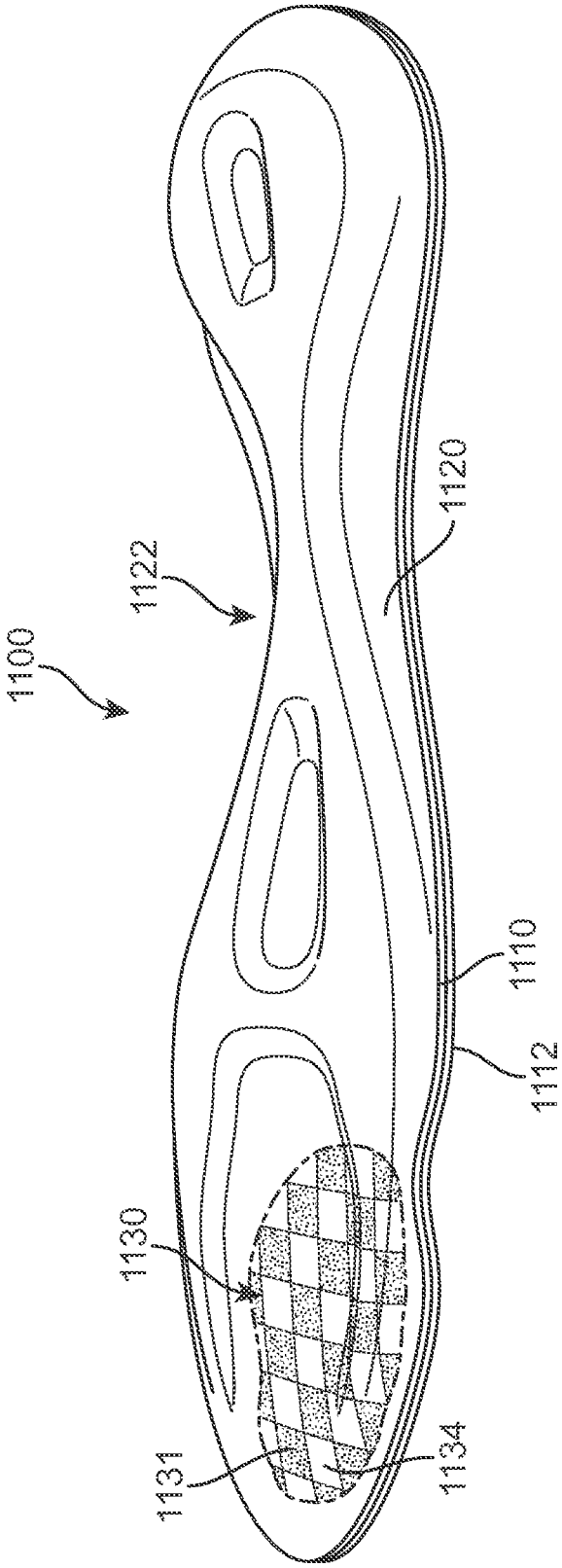

FIG. 12

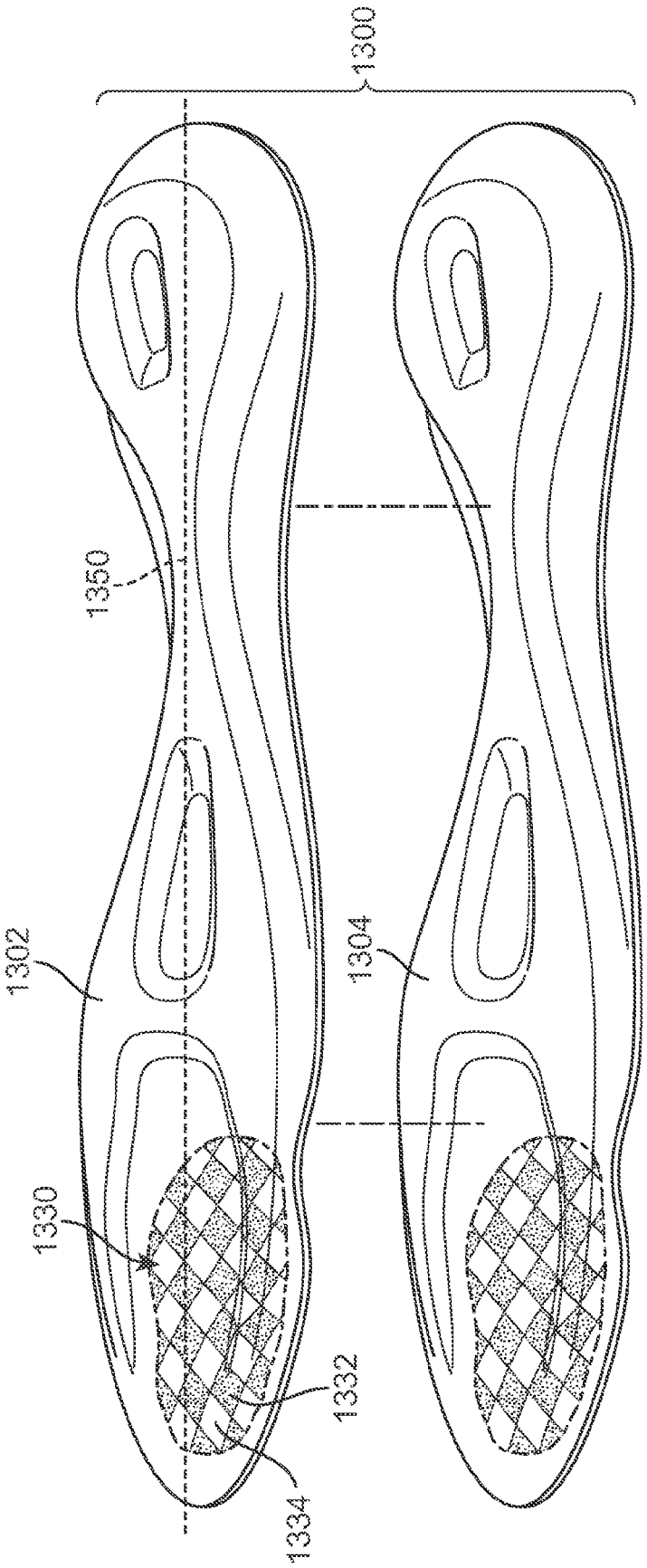

FIG. 13

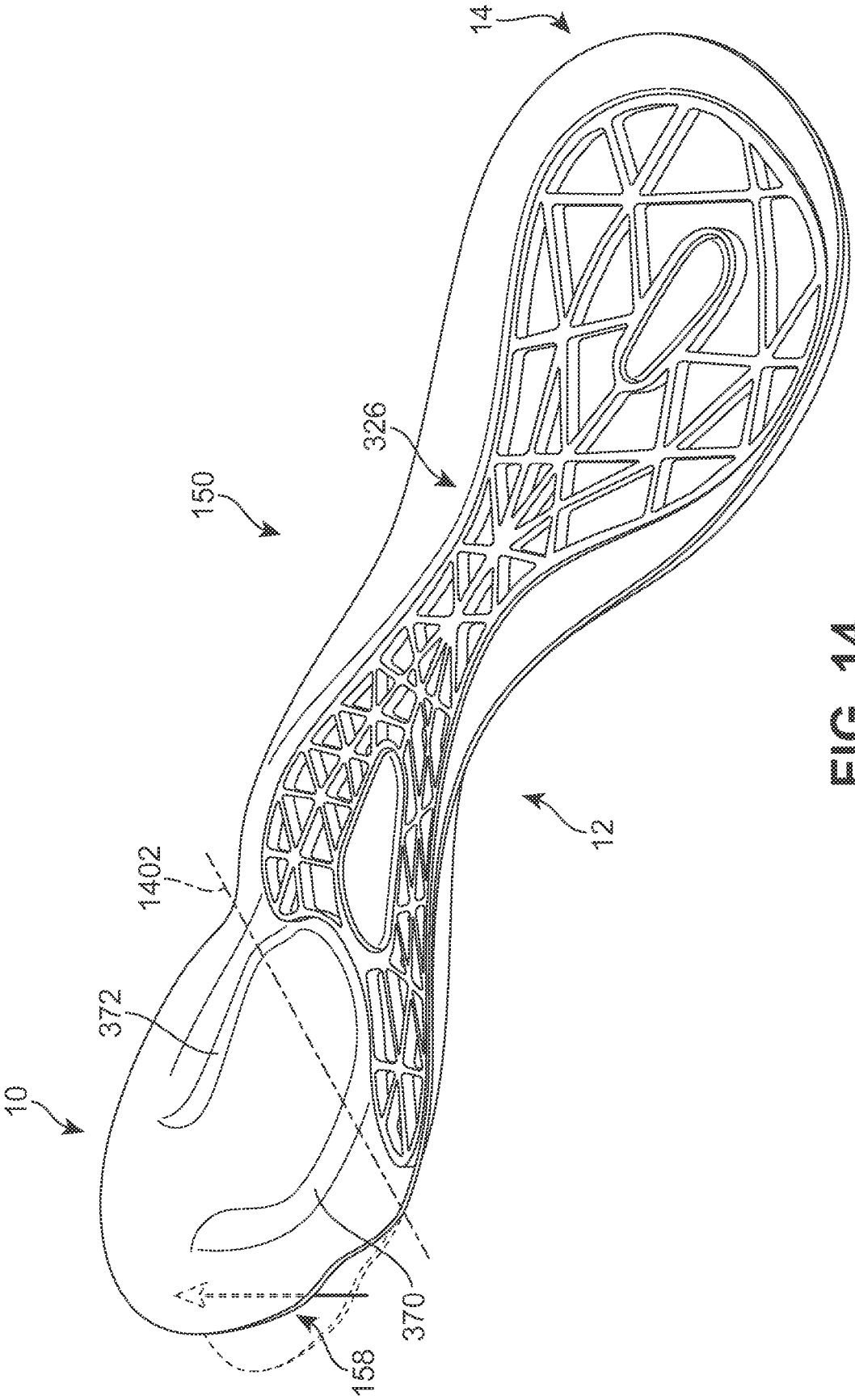

FIG. 14

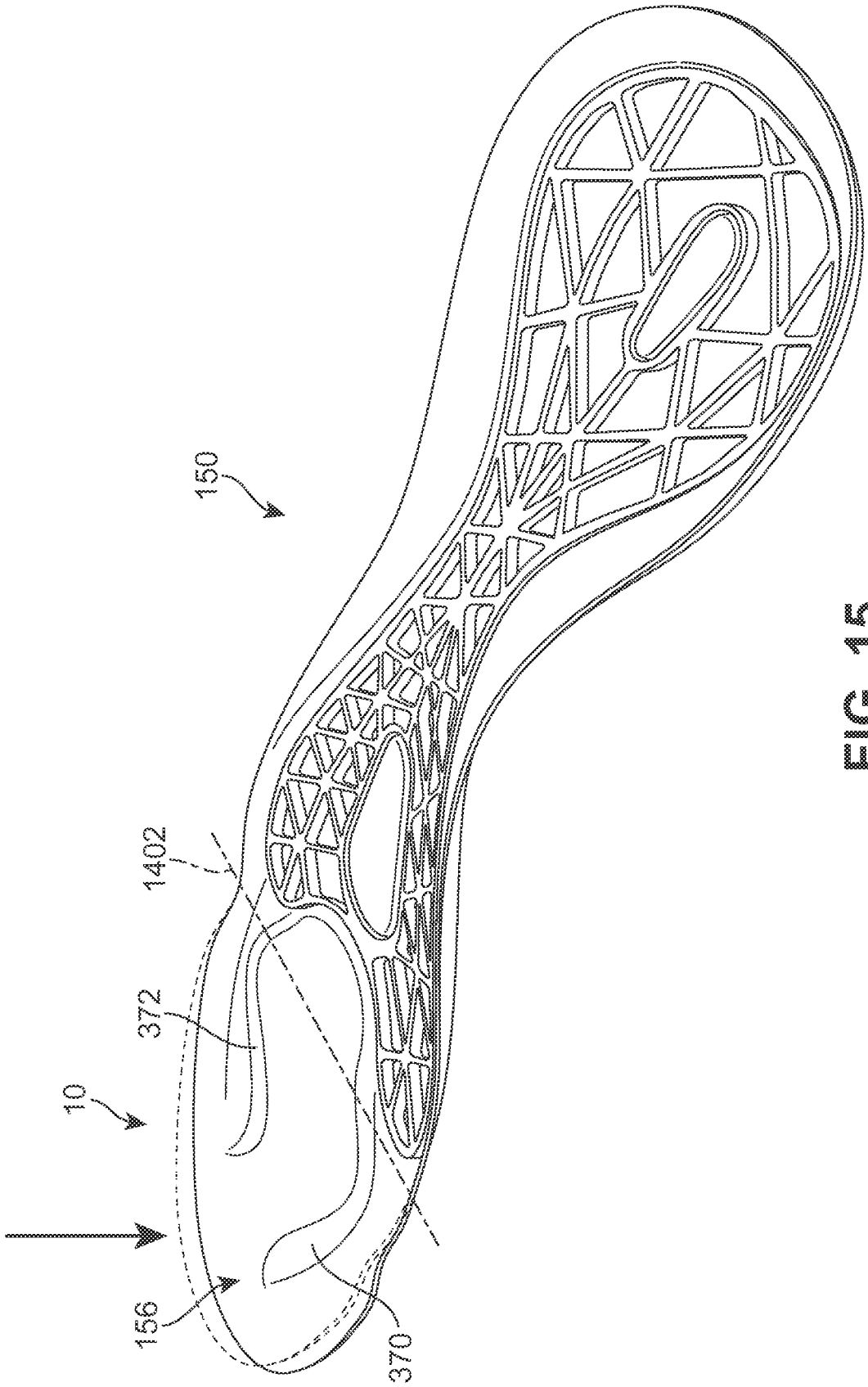

FIG. 15

SOLE MEMBER FOR AN ARTICLE OF FOOTWEAR

BACKGROUND

The present embodiments relate generally to articles of footwear, and in particular to a sole member for an article of footwear.

Articles of footwear generally include two primary elements: an upper and a sole. The upper may be formed from a variety of materials that are stitched or adhesively bonded together to form a void within the footwear for comfortably and securely receiving a foot. The sole is secured to a lower portion of the upper and is generally positioned between the foot and the ground. In many articles of footwear, including athletic footwear styles, the sole often incorporates an insole, a midsole, and an outsole.

SUMMARY

In one aspect, a sole structure for an article of footwear includes a base portion and a bulging portion extending distally from the base portion. The bulging portion comprises a peripheral portion and a central portion bounded by the peripheral portion. The central portion is recessed with respect to the peripheral portion.

In another aspect, a sole structure for an article of footwear includes a forefoot portion, a midfoot portion and a heel portion. The sole structure also includes a base portion extending through the forefoot portion, the midfoot portion and the heel portion. The sole structure also includes a first bulging portion extending distally from the base portion, where the first bulging portion is disposed in the forefoot portion and the midfoot portion. The sole structure also includes a second bulging portion extending distally from the base portion, where the second bulging portion is disposed in the heel portion. The first bulging portion includes a first peripheral portion and a first central portion. The second bulging portion includes a second peripheral portion and a second central portion. The first central portion is recessed with respect to the first peripheral portion and the second central portion is recessed with respect to the second peripheral portion.

In another aspect, a sole member for an article of footwear includes a sole structure with a first side and a second side; a base portion and a bulging portion extending distally from the first side of the base portion. The bulging portion includes a peripheral portion and a central portion bounded by the peripheral portion. The central portion is recessed with respect to the peripheral portion. The sole member also includes a reinforcing member disposed against the second side of the base portion in a region corresponding to the bulging portion. The reinforcing member includes a cut-out portion that is configured to receive the central portion of the bulging portion.

In another aspect, a sole structure for an article of footwear includes a base portion and a bulging portion extending distally from the base portion. The bulging portion further includes at least one tapering portion extending along an outer peripheral edge of the sole structure. The at least one tapering portion including a first end portion and a second end portion. The height of the at least one tapering portion decreases substantially gradually from the first end portion to the second end portion and the width of the at least one tapering portion decreases substantially gradually from the first end portion to the second end portion.

In another aspect, a sole structure for an article of footwear includes a first composite layer with a first base portion and a first bulging portion. The sole structure also includes a second composite layer with a second base portion and a second bulging portion, where the second bulging portion corresponds to the first bulging portion. The first composite layer is a first woven layer with a first weave orientation. The second composite layer is a second woven layer with a second weave orientation. The first weave orientation is substantially equal to the second weave orientation.

Other systems, methods, features and advantages of the embodiments will be, or will become, apparent to one of ordinary skill in the art upon examination of the following figures and detailed description. It is intended that all such additional systems, methods, features and advantages be included within this description and this summary, be within the scope of the embodiments, and be protected by the following claims.

BRIEF DESCRIPTION OF THE DRAWINGS

The embodiments can be better understood with reference to the following drawings and description. The components in the figures are not necessarily to scale, emphasis instead being placed upon illustrating the principles of the embodiments. Moreover, in the figures, like reference numerals designate corresponding parts throughout the different views.

FIG. **1** is an isometric view of an embodiment of a proximal side of a sole member;

FIG. **2** is an isometric view of an embodiment of a distal side of a sole member;

FIG. **3** is a side perspective view of an embodiment of a distal side a sole structure;

FIG. **4** is a bottom view of an embodiment of a sole structure;

FIG. **5** is an enlarged view of an embodiment of a forefoot portion of a sole structure;

FIG. **6** is an isometric view of an embodiment of a proximal side of a sole structure;

FIG. **7** is an isometric exploded view of an embodiment of a proximal side of a sole structure;

FIG. **8** is an isometric view of an embodiment of a proximal side of a sole structure including enlarged cross sectional views of a forefoot portion and a heel portion of the sole structure;

FIG. **9** is a schematic view of the distribution of forces throughout a heel portion of a sole structure during contact with a ground surface according to one embodiment;

FIG. **10** is a schematic view of the distribution of forces throughout a forefoot portion of a sole structure during contact with a ground surface according to one embodiment;

FIG. **11** is an exploded isometric view of an embodiment of a sole structure comprising two layers of woven composite material;

FIG. **12** is an isometric view of an embodiment of a sole structure comprising two layers of a woven composite material;

FIG. **13** is an exploded isometric view of an alternative embodiment of a sole structure comprising two layers of a woven composite material;

FIG. **14** is a schematic view of an embodiment of a sole structure bending under an applied force; and

FIG. **15** is a schematic view of an embodiment of a sole structure resisting bending under an applied force.

DETAILED DESCRIPTION

FIGS. **1** and **2** illustrate isometric views of an embodiment of sole member **100** that may be incorporated into an article of

footwear. Sole member **100** could be incorporated into any type of footwear including, but not limited to: hiking boots, soccer shoes, football shoes, sneakers, rugby shoes, basketball shoes, baseball shoes as well as other kinds of shoes. As shown in FIGS. **1** and **2**, sole member **100** is intended to be used with a right foot; however, it should be understood that the following discussion may equally apply to a mirror image of sole member **100** that is intended for use with a left foot.

Generally, sole member **100** may comprise one or more components traditionally associated with the sole of an article. For example, in some cases, sole member **100** may comprise an insole. In other cases, sole member **100** may comprise a midsole. In still other cases, sole member **100** may comprise an outsole. In still other cases, sole member **100** could comprise any combination of components, including, for example, a midsole and an outsole. In some embodiments, sole member **100** may comprise a soccer plate.

In some embodiments, sole member **100** may be configured to provide traction for article **100**. In addition to providing traction, sole member **100** may attenuate ground reaction forces when compressed between the foot and the ground during walking, running or other ambulatory activities. The configuration of sole member **100** may vary significantly in different embodiments to include a variety of conventional or non-conventional structures. In some cases, the configuration of sole member **100** can be configured according to one or more types of ground surfaces on which sole member **100** may be used. Examples of ground surfaces include, but are not limited to: natural turf, synthetic turf, dirt, as well as other surfaces.

For purposes of reference, sole member **100** may be divided into forefoot portion **10**, midfoot portion **12** and heel portion **14**. Forefoot portion **10** may be generally associated with the toes and joints connecting the metatarsals with the phalanges. Midfoot portion **12** may be generally associated with the arch of a foot. Likewise, heel portion **14** may be generally associated with the heel of a foot, including the calcaneus bone. In addition, sole member **100** may include lateral side **16** and medial side **18**. In particular, lateral side **16** and medial side **18** may be opposing sides of sole member **100**. Furthermore, both lateral side **16** and medial side **18** may extend through forefoot portion **10**, midfoot portion **12** and heel portion **14**.

It will be understood that forefoot portion **10**, midfoot portion **12** and heel portion **14** are only intended for purposes of description and are not intended to demarcate precise regions of sole member **100**. Likewise, lateral side **16** and medial side **18** are intended to represent generally two sides of sole member **100**, rather than precisely demarcating sole member **100** into two halves.

For consistency and convenience, directional adjectives are employed throughout this detailed description corresponding to the illustrated embodiments. The term "longitudinal" as used throughout this detailed description and in the claims refers to a direction extending a length of a footwear component. In some cases, the longitudinal direction may extend from a forefoot portion to a heel portion of the footwear component. Also, the term "lateral" as used throughout this detailed description and in the claims refers to a direction extending a width of the footwear component. In other words, the lateral direction may extend between a medial side and a lateral side of the footwear component. Furthermore, the term "vertical" as used throughout this detailed description and in the claims refers to a direction generally perpendicular to a lateral and longitudinal direction. For example, in cases where a sole member is planted flat on a ground surface, the vertical direction may extend from the ground surface upward. In addition, the term "proximal" refers to a direction that is directed towards a center of a footwear component. Likewise, the term "distal" refers to a direction that is directed away from a center of the footwear component.

Sole member **100** may include a first side **102** and a second side **104**. In some cases, first side **102** may be an inner or upper side. In particular, first side **102** may confront a foot or a component of an upper. In some cases, second side **104** may be an outer or lower side of sole member **100**. In particular, second side **104** may be configured to contact a ground surface.

In some embodiments, sole member **100** can comprise multiple different components. In some cases, sole member **100** includes sole structure **150**. Sole structure **150** may comprise a substantially rigid structure that provides strength and support for sole member **100**. In some cases, sole structure **150** may extend the full length of sole member **100**. In other cases, however, sole structure **150** could extend through only a portion of sole member **100**.

In some embodiments, sole structure **150** may be a layered structure. Generally, sole structure **150** may comprise any number of layers. In some cases, sole structure **150** can comprise two or more layers. In other cases, sole structure **150** can comprise three layers. In one embodiment, sole structure **150** comprises two layers including first layer **152** and second layer **154**. In still other embodiments, however, sole structure **150** may include a single layer.

First layer **152** may include first side **151** and second side **153**. In addition, second layer **154** may include first side **155** and second side **157**. In some cases, second side **153** of first layer **152** may confront first side **155** of second layer **154**. In other words, first layer **152** may be stacked against second layer **154**.

In some embodiments, sole member **100** may also include reinforcing member **130** (see FIG. **1**). In some embodiments, reinforcing member **130** may comprise a substantially rigid member that is configured to increase stability for sole member **100**. Moreover, the size, shape and rigidity of reinforcing member **130** may be varied in different embodiments to achieve a desired degree of additional support for sole member **100**. Further details of reinforcing member **130** are discussed below with reference to FIGS. **6** and **7**.

In some embodiments, sole member **100** may also include outer member **120**. In some cases, sole structure **150** may be disposed within outer member **120**. For example, in one embodiment, outer member **120** may comprise a material this is molded over sole structure **150** as well as reinforcing member **130**. In some cases, outer member **120** may encase sole structure **150**. In other cases, however, outer member **120** may cover only some portions of sole structure **150**. Also, in some cases, outer member **120** may not cover reinforcing member **130**. In one embodiment, outer member **120** is disposed on some portions of sole structure **150**, but not others. For example, outer member **120** may cover peripheral edges of sole structure **150**. With this arrangement, outer member **120** may provide a protective covering for some portions of support structure **150**. In addition, in some cases, outer member **120** may provide a means for attaching additional components to sole member **100**.

In some embodiments, sole member **100** may include provisions for enhancing traction with a ground surface. For example, in some cases, sole member **100** can include one or more cleat members. Cleat members may be configured to penetrate into a ground surface. In one embodiment, sole member **100** includes plurality of cleat members **110**. In some cases, plurality of cleat members **110** may be disposed on

second side **104** of sole member **100**. Plurality of cleat members **110** may further comprise forefoot cleat members **116** and heel cleat members **118**.

In some embodiments, plurality of cleat members **110** may be integrally formed with outer member **120**. For example, in an embodiment where outer member **120** is molded over sole structure **150**, plurality of cleat members **110** may be formed simultaneously with outer member **120**. In other embodiments, however, plurality of cleat members **110** may not be integrally formed with outer member **120**. For example, in another embodiment, plurality of cleat members **110** could be detachable cleat members that fasten to outer member **120**.

In different embodiments, the number of cleat members comprising plurality of cleat members **110** could vary. In the current embodiment, forefoot cleat members **116** comprise five cleat members while heel cleat members **118** comprise two cleat members. In other cases, however, forefoot cleat members **116** could have more than five cleat members. In still other cases, forefoot cleat members **116** could have less than five cleat members. Likewise, in other cases, heel cleat members **118** could have more than two cleat members. In still other cases, heel cleat members **118** could have less than two cleat members.

In different embodiments, the geometry of each cleat member in plurality of cleat members **110** could vary. For example, some embodiments may include cylindrical cleat members. Other embodiments may include tapered cylindrical (or frustum conical) cleat members. Still other embodiments may include rectangular cleat members. Moreover, any other shapes for cleat members may be possible in other embodiments. In one embodiment, plurality of cleat members **110** comprises six tapered conical cleat members **112** and a single rectangular cleat member **113** (see FIG. **2**).

The general arrangement of cleat members on sole member **100** may vary. In some cases, the locations of one or more cleat members may be selected to correspond with one or more geometric features of sole member **100**. For example, in some cases, one or more cleat members may be disposed on highly contoured portions of sole member **100**.

The materials of one or more components of sole member **100** could vary in different embodiments. Generally, materials for each component may be selected to achieve desired material properties including, but not limited to: strength, durability, flexibility, rigidity, weight as well as other material properties. As one example, materials for sole structure **150** could be selected to achieve a substantially rigid component that is lightweight and durable.

Generally, first layer **152** and second layer **154** of sole structure **150** could be made of any materials. In some cases, first layer **152** and second layer **154** may each comprise a layer of composite material. Examples of composite materials include, but are not limited to: fiber-reinforced composite materials (including short fiber-reinforced materials and continuous fiber-reinforced materials), fiber-reinforced polymers (including carbon-fiber reinforced plastic and glass-reinforced plastic), carbon nanotube reinforced polymers, as well as any other kind of composite materials known in the art. In one embodiment, first layer **152** and second layer **154** may be made of carbon fiber-reinforced plastic. It will also be understood that in other embodiments, first layer **152** and second layer **154** could be made of substantially different materials.

Generally, outer member **120** may comprise any materials. Examples of different materials that may be used for constructing outer member **120** include, but are not limited to: polymers, plastics, thermoplastics, foams, rubbers, as well as any other kinds of materials. In one embodiment, outer member **120** may be made of thermoplastic polyurethane (TPU). Moreover, in some cases, outer member **120** may be made of a material that is substantially transparent so that portions of sole structure **150** may be partially visible through outer member **120**.

In different embodiments, reinforcing member **130** may be made of various kinds of materials. Examples of different kinds of materials that may be used include, but are not limited to: metals, polymers, plastics, thermoplastics, foams, rubbers, composite materials, as well as any other kinds of materials. In one embodiment, reinforcing member **130** may comprise a substantially rigid plastic.

For purposes of clarity, many of the following Figures illustrate views of sole member **100** with outer member **120** removed. The principles discussed below for a sole structure may apply to embodiments in which an outer member is present as well as embodiments in which no outer member is present.

Throughout the following, sole structure **150** may be described with reference to a first side and a second side. In embodiments in which sole structure **150** comprises multiple layers, the first side and the second side may refer to the outermost layers that are exposed. For example, in the current embodiment, sole structure **150** may include proximal side **156** (see FIGS. **6** and **7**) and distal side **158** (see FIGS. **3** and **4**). Proximal side **156** may be a side of sole structure **150** that is configured to confront a foot or portion of an upper. Moreover, proximal side **156** may correspond to first side **151** of first layer **152**. Distal side **158** may be a side of sole structure **150** that is configured to face towards a ground surface during use. Moreover, distal side **158** may correspond to second side **157** of second layer **154**.

For purposes of describing the geometry of sole structure **150**, the term depth may be used. The term "depth" as used throughout this detailed description and in the claims refers to the approximate distance between a portion of sole structure **150** a reference point (or surface) having a relatively fixed vertical position. For example, in some cases, the depth may refer to the approximate distance between a portion of sole structure **150** and a plane coincident with an outer peripheral edge of sole structure **150**. In other cases, the depth could be measured as the approximate vertical distance between two adjacent portions. In some cases, the depth of sole structure **150** may vary over different regions.

FIGS. **3** through **5** illustrate various views of distal side **158** of sole structure **150**. Referring first to FIGS. **3** and **4**, sole structure **150** may include base portion **300**. Base portion **300** may extend from forefoot portion **10** to heel portion **14** of sole structure **150**. In the current embodiment, base portion **300** is comprised of outer peripheral edge **302** and forward portion **304**. In some cases, outer peripheral edge **302** may extend around a substantially majority of the periphery of sole structure **150**. In addition, in some cases, forward portion **304** comprises a portion of forefoot portion **10** that is disposed adjacent to forefoot peripheral edge **308**.

In some embodiments, base portion **300** may be characterized as a portion of sole structure **150** with a relatively low degree of curvature. In some cases, base portion **300** may be characterized as a portion of sole structure over which the depth of sole structure **150** remains substantially shallow. In other cases, however, the depth of base portion **300** could vary in any manner. Also, in other cases, the curvature of base portion **300** could vary in any other manner.

A sole structure can include provisions for distributing forces throughout different portions of the sole structure. In some cases, a sole structure can incorporate one or more portions of increased depth that enhance structural support. In

some cases, the portions of increased depth can be shaped to distribute forces applied at a center of a sole structure across the sole structure.

Sole structure **150** may also include one or more bulging portions. The term "bulging portion" as used throughout this detailed description and in the claims refers to any portion of a sole structure that extends outwardly or distally from a base portion. In some cases, the average depth of a bulging portion may be substantially greater than the average depth of a base portion.

In some embodiments, sole structure **150** includes first bulging portion **320** and second bulging portion **322**. First bulging portion **320** and second bulging portion **322** may generally extend outwardly from distal side **158** of sole structure **150**. In some cases, first bulging portion **320** and second bulging portion **322** may be characterized as raised surfaces or raised plateaus of sole structure **150**. Moreover, as shown in FIG. **3**, the average depth of first bulging portion **320** and second bulging portion **322** may be substantially greater than the average depth of base portion **300**.

In some embodiments, first bulging portion **320** and/or second bulging portion **322** may be integrally formed with base portion **300**. In particular, in some cases, first bulging portion **320**, second bulging portion **322** and base portion **300** may comprise a single monolithic structure. For example, in some cases, first bulging portion **320**, second bulging portion **322** and base portion **300** may be formed from a single material layer or from multiple layers stacked together. In other cases, however, first bulging portion **320** and/or second bulging portion **322** may be separate components from base portion **300**.

Generally, first bulging portion **320** and second bulging portion may be disposed in any portion of sole structure **150**. In some cases, first bulging portion **320** may generally extend through forefoot portion **10** and midfoot portion **12**. In other cases, however, first bulging portion **320** could be disposed in any other portion of sole structure **150**. In some cases, second bulging portion **322** may generally extend through heel portion **14**. In other cases, however, second bulging portion **322** may extend through any other portion of sole structure **150**.

In some cases, first bulging portion **320** and second bulging portion **322** may be substantially continuous with one another. For example, in one embodiment, first bulging portion **320** and second bulging portion **322** may comprise a single elongated bulging portion **326**. In other embodiments, however, first bulging portion **320** and second bulging portion **322** may be discontinuous. In other words, in some cases, first bulging portion **320** and second bulging portion **322** could be separated by base portion **300**.

In different embodiments, the peripheral shape of a bulging portion can vary. Examples of different peripheral shapes for a bulging portion include, but are not limited to: rounded, circular, elliptical, triangular, square, rectangular, polygonal, regular, irregular, symmetric, asymmetric as well as any other kinds of shapes. In one embodiment, first bulging portion **320** may have an approximately triangular peripheral shape, as seen most clearly in FIG. **4**. This triangular shape may be associated with medial edge **362**, lateral edge **364** and forward edge **366**. In one embodiment, second bulging portion **322** may have an approximately rounded peripheral shape. It will be understood that the peripheral shapes used to describe first bulging portion **320** and second bulging portion **322** are only intended as approximations. For example, first bulging portion **320** may only be approximately triangular and deviations from this approximate shape occur along different portions of the edges of bulging portion **320**.

Each bulging portion may further include a peripheral portion and a central portion. In some cases, first bulging portion **320** includes first peripheral portion **330** and first central portion **332**. First central portion **332** may be bounded by first peripheral portion **330**. In some cases, second bulging portion **322** includes second peripheral portion **334** and second central portion **336**. Second central portion **336** may be bounded by second peripheral portion **334**.

In some cases, first central portion **332** may be recessed with respect to first peripheral portion **330**. In particular, first central portion **332** may be recessed with respect to exterior surface **340** of first peripheral portion **330**. Likewise, in some cases, second central portion **336** may be recessed with respect to second peripheral portion **334**. In particular, second central portion **336** may be recessed with respect to exterior surface **342** of second peripheral portion **334**.

Generally, the shapes of a central portion that is recessed with respect to a peripheral portion may vary. Examples of different shapes for a central portion include, but are not limited to: rounded, circular, elliptical, triangular, square, rectangular, polygonal, regular, irregular, symmetric, asymmetric as well as any other kinds of shapes. Moreover, the shape of a central portion may be selected according to the location along a sole structure.

In some embodiments, first central portion **332** may have a rounded shape. In some cases, first central portion **332** may an elongated rounded shape. In one embodiment, first central portion **332** may have a teardrop-like shape. In particular, the width of first central portion **332** may generally increase towards forefoot portion **10**.

Referring to FIG. **4**, first central portion **332** may include first end portion **350** and second end portion **352**. First end portion **350** may be disposed forwardly of second end portion **352**. In the current embodiment, first end portion **350** may have width W**1**. Additionally, second end portion **352** may have width W**2**. In some cases, width W**1** may be substantially greater than width W**2**. Moreover, the width of first central portion **332** gradually decreases between width W**1** at first end portion **350** and width W**2** at second end portion **352**.

Although the current embodiment illustrates a central portion with an increasing width towards forefoot portion **10**, other embodiments could include a central portion whose width changes in any other manner. As an example, in another embodiment, the width of a central portion could generally increase towards heel portion **14**. In still another embodiment, the width of a central portion could remain approximately constant.

In some embodiments, second central portion **336** may have a rounded shape. In some cases, second central portion **336** may an elongated rounded shape. In one embodiment, second central portion **336** may have a teardrop-like shape. In particular, the width of first central portion **332** may generally increase towards heel portion **14**. In other cases, however, the approximate shape of second central portion **336** could vary in any other manner.

A sole structure can include provisions to improve stability in a forefoot portion. In some cases, a sole structure can include bulging portions that taper in size through a forefoot portion. In some cases, the bulging portions may extend along the periphery of the forefoot portion.

Referring now to FIG. **5**, first bulging portion **320** may further include one or more tapered portions. In one embodiment, first bulging portion **320** includes first tapered portion **370** and second tapered portion **372**. First tapered portion **370** may extend along forefoot lateral edge **182** of sole structure **150**. Second tapered portion **372** may extend along forefoot medial edge **180** of sole structure **150**.

First tapered portion **370** and second tapered portion **372** form filament like extensions of first bulging portion **320** that taper in width and depth. For purposes of illustration, the depth of first tapered portion **370** and/or second tapered portion **372** may be measured relative to base portion **300**. First tapered portion **370** may include first end portion **380** and second end portion **382**. First end portion **380** may have width W**3** and depth D**1**. Second end portion **382** may have width W**4** and depth D**2**. In some cases, width W**4** is substantially less than width W**3**. Also, in some cases, depth D**2** is substantially less than depth D**1**. Moreover, the width of first tapered portion **370** may gradually decrease from first end portion **380** to second end portion **382**. Similarly, in some cases, the depth of first tapered portion **370** may gradually decrease from first end portion **380** to second end portion **382**.

As illustrated in FIG. **5**, the width and depth of first tapered portion **370** gradually decrease until they are approximately zero. In other words, first tapered portion **370** gradually transitions to base portion **300** without any sudden changes in width or depth. In some cases, the width and depth of second tapered portion **372** may also gradually decrease in a similar manner. This tapered configuration may help improve the stability of forefoot portion by removing any forward edges of first bulging portion **320** at the forward most end of forefoot portion **10**.

FIGS. **6** and **7** illustrate isometric assembled and isometric exploded views, respectively, of proximal side **156** of sole structure **150**. Referring to FIGS. **6** and **7**, first peripheral portion **330** and second peripheral portion **334** may be recessed with respect to base portion **300** on proximal side **156**. Also, first central portion **332** and second central portion **336** may be raised with respect to first peripheral portion **330** and second peripheral portion **334** on proximal side **156**.

A sole member can include provisions for reinforcing one or more bulging portions of a sole structure. In some cases, a sole member can include a reinforcing member that reinforces one or more bulging portions. In some cases, a reinforcing member may be disposed within one or more bulging portions.

As previously discussed, sole structure **150** may be associated with reinforcing member **130**. In some embodiments, reinforcing member **130** may comprise a base layer **131**. In some cases, base layer **131** may be a relatively thin layer that is reinforced with rib portions **133**. In particular, rib portions **133** may be arranged in a web-like manner along base layer **131**.

In different embodiments, the configuration of rib portions **133** could vary. In some cases, rib portions **133** may be configured in various different shapes including, but not limited to: rounded shapes, triangular shapes, rectangular shapes, hexagonal shapes, polygonal shapes, regular shapes, irregular shapes as well as any other kinds of shapes. Moreover, the pattern of shapes could be regular, irregular, tessellated as well as any other kind of pattern. In one embodiment, rib portions **133** are arranged to form a tessellated triangle pattern. This configuration may provide enhanced strength for reinforcing member **130** while reducing the overall weight and/or density of reinforcing member **130**.

In some embodiments, reinforcing member **130** may be configured to enhance the strength of sole structure **150** and reduce unwanted bending. In some cases, reinforcing member **130** may be disposed against sole structure **150**. More specifically, in some cases, reinforcing member **130** may be configured to associate with one or more bulging portions of sole structure **150**.

Generally, the material properties of reinforcing member **130** may vary in different embodiments. In some cases, reinforcing member **130** may be substantially less rigid than sole structure **150**. In other cases, reinforcing member **130** may have a rigidity that is substantially similar to the rigidity of sole structure **150**. In still other cases, reinforcing member **130** could be substantially more rigid than sole structure **150**. Moreover, in some cases, the rigidity of reinforcing member **130** may vary according to the materials used as well as the configuration of rib portions **133**.

In some cases, reinforcing member **130** is configured to fit within first bulging portion **320** and second bulging portion **322** on proximal side **156**. Specifically, first portion **136** of reinforcing member **130** may fit within the cavity formed by first peripheral portion **330** on proximal side **156**. Likewise, second portion **138** of reinforcing member **130** may fit within the cavity formed by second peripheral portion **334** on proximal side **156**.

A reinforcing member can include provisions for associating with raised central portions on a proximal side of a sole structure. In some embodiments, reinforcing member **130** includes first cut-out portion **132** and second cut-out portion **134** (see FIG. **7**). In some cases, the shapes of first cut-out portion **132** and second cut-out portion **134** may correspond to the shapes of first central portion **332** and second central portion **336**, respectively. In some cases, first central portion **332** may be inserted through first cut-out portion **132**. In some cases, second central portion **334** may be inserted through second cut-out portion **134**. This arrangement allows reinforcing member **130** to reinforce first bulging portion **320** and second bulging portion **322** while remaining approximately flush with base portion **300** on proximal side **156**.

FIG. **8** illustrates several cross sectional views of an embodiment of sole structure **150**. Referring to FIG. **8**, first bulging portion **320** has a convex shape with respect to distal side **158** of sole structure **150**. For purposes of illustrating the approximate depth of various portions of sole structure **150**, reference is made to planar surface **800**. Planar surface **800** is a surface that is approximately coincident with outer peripheral edge **302** of sole structure **150**.

In this case, first peripheral portion **330** of first bulging portion **320** has a depth D**3** with respect to planar surface **800**. Additionally, first central portion **332** of first bulging portion **320** has a depth D**4** with respect to planar surface **800**. In some cases, depth D**4** is substantially less than depth D**3**. In a similar manner, second peripheral portion **334** of second bulging portion **322** may have a greater depth than second central portion **336**. In a similar manner, the depth of second peripheral portion **334** may be substantially greater than the depth of second central portion **336**.

This difference in depth between the peripheral portion and central portion of each bulging portion may provide cross-sectional channels. In some cases, first bulging portion **320** and second bulging portion **322** provide channel like structures that extend from forefoot portion **10** to heel portion **14**. For example, first bulging portion **320** may provide first channel portion **810** and second channel portion **812**, which are separated by first central portion **332**. Likewise, second bulging portion **322** may provide third channel portion **814** and fourth channel portion **816**, which are separated by second central portion **336**. These channels may increase the stiffness of sole structure **150** in the regions spanned by first bulging portion **320** and second bulging portion **322**. Moreover, reinforcing portion **130** may act to enhance the structural integrity of first bulging portion **320** and second bulging portion **322**. This arrangement may further facilitate the distribution of forces from first central portion **332** and second central portion **336** throughout forefoot portion **10** and heel portion **14**, respectively.

Generally, the thickness of sole structure **150** may vary. The term "thickness" as used throughout this detailed description and in the claims refers to a measurement of the distance between proximal side **156** and distal side **158** at any particular location along sole structure **150**. In some embodiments, for example, the thickness of any portion of sole structure **150** may be approximately constant over the entirety of sole structure **150**. For example, in the current embodiment, sole structure **150** has an approximately constant thickness T**1**. In other cases, however, the thickness of sole structure **150** could vary over different portions.

FIGS. **9** and **10** illustrate schematic views of force distribution through sole structure **150** during a heel strike and forefoot strike, respectively, according to one embodiment. For purposes of illustration, sole structure **150** is shown in isolation, though it will be understood that reinforcing member **130** and outer member **120** may also be present in some embodiments. Referring first to FIG. **9**, as the heel of a user makes contact with a ground surface during a heel strike, force **900** may be initially applied at second central portion **336**. Due to the contoured shape of second bulging portion **322**, force **900** may be distributed through second peripheral portion **334**. This configuration helps to more evenly distribute forces that are applied to heel portion **14** during a heel strike.

Referring now to FIG. **10**, as the forefoot of the user contacts the ground following the heel strike, force **1000** may be applied at first central portion **332**. Due to the contoured shape of first bulging portion **320**, force **1000** may be distributed through first peripheral portion **330**. This configuration helps to more evenly distribute forces that are applied to forefoot portion **10**.

A sole structure can include provisions for enhancing cross sectional strength. In some cases, the orientation of components of a composite layer may be selected to control the rigidity or other structural properties of the sole structure. In some cases, the orientation of a woven composite material can be selected to control the rigidity or other structural properties of the sole structure.

FIGS. **11** and **12** illustrate a view of an embodiment of sole structure **1100**. Sole structure **1100** may be substantially similar to sole structure **150**. In particular, sole structure **1100** may comprise first layer **1110** and second layer **1112**. Each layer may comprise a substantially similar geometry to the geometry of sole structure **150**. When assembled, sole structure **1100** may comprise base portion **1120** and elongated bulging portion **1122** (see FIG. **12**).

As discussed above, in some embodiments, layers of a sole structure can be made of composite materials. In some cases a sole structure can be made of a carbon fiber reinforced composite material. In some cases, a sole structure can comprise multiple layers of a carbon fiber composite material. In one embodiment, first layer **1110** and second layer **1112** are both made of a carbon fiber composite material.

Each layer may comprise a woven composite structure. For example, first layer **1110** may comprise filaments **1130** that are woven together in a plain weave pattern. For purposes of illustration, the weaving pattern formed by filaments **1130** is only shown at one portion of first layer **1110**. However, it will be understood that the entirety of first layer **1110** may comprise a woven composite. In a similar manner, second layer **1112** may comprise filaments **1132** that are woven together in a substantially similar plain weave pattern.

The woven structure of a composite material can be characterized by the weave orientation. The term "weave orientation" refers to the orientation or direction of a set of filaments within a weave. In some cases, the weave orientation can be given as the angle between a central axis of a structure and a filament intersecting the central axis. As one example, in a situation where one set of filaments of a weave may be approximately parallel with a central axis, the weave orientation may be approximately 0 degrees. As another example, in a situation where one set of filaments makes an angle of approximately 30 degrees with the central axis, the weave orientation may be approximately 30 degrees.

In the current embodiment, shown in FIGS. **11** and **12**, filaments **1130** comprise a first set of filaments **1131** (indicated with shading) and a second set of filaments **1134**. First set of filaments **1131** are woven in a substantially perpendicular fashion with second set of filaments **1134**. In this case, first set of filaments **1131** are generally oriented along the longitudinal direction of sole structure **1100**. Also, second set of filaments are **1134** generally oriented along the lateral direction of sole structure **1100**. In addition, first set of filaments **1131** are seen to be approximately parallel with central axis **1150** of sole structure **1100**. Therefore, in this case, the weave orientation of first layer **1110** is seen to be approximately 0 degrees. Moreover, second layer **1112**, which is shown with a substantially identical weave pattern and orientation, also has a weave orientation of approximately 0 degrees.

FIG. **13** illustrates another possible embodiment of a sole structure **1300**, which has a different weave orientation from the one shown in FIGS. **11** and **12**. As seen in FIG. **13**, filaments **1330** of first layer **1302** comprise a first set of filaments **1332** (indicated with shading) and a second set of filaments **1334**. First set of filaments **1332** intersect central axis **1350** of sole structure **1300** at an angle of approximately 45 degrees. Moreover, second layer **1304**, which is shown with a substantially identical weave pattern and orientation, also has a weave orientation of approximately 45 degrees.

Although the current embodiments illustrate configurations in which adjacent layers of a sole structure have substantially identical weave orientations, in still other embodiments the weave orientations of adjacent layers could be different. For example, in another embodiment, one layer of a sole structure could have a weave orientation of approximately 0 degrees while a second layer could have a weave orientation of approximately 45 degrees. Moreover, it will be understood that the weave orientation can have any possible angular value and is not limited to values of 0 or 45 degrees. In other cases, the weave orientation could have any value in the range between 0 and 90 degrees. In still other cases, the weave orientation could have any value in the range between 0 and 360 degrees.

The configuration described above helps to improve the strength of a sole member while helping to minimize weight. In particular, selecting various different weave orientations for each layer of the sole structure helps provide stable configurations that are stiff enough to support a foot during walking, running, cutting as well as other ambulatory activities. Moreover, when these woven configurations are used in combination with the geometric features described above, the overall stiffness of the sole structure can be tuned to meet the needs of a user. In some cases, this arrangement allows the number of layers required to form a sole structure to be reduced over systems that do not have these particular weave orientations and geometric features.

FIGS. **14** and **15** illustrate schematic views of sole structure **150** responding to various applied forces. As seen in FIG. **14**, a force is applied at distal side **158** of forefoot portion **10**. This force may represent, for example, the force applied by a ground surface as the forefoot is planted. Under this upwardly directed force, sole structure **150** may provide some bending, especially along bending axis **1402**.

Generally, bending axis **1402** could be associated with any portion of sole structure **150**. In some cases, bending axis **1402** may coincide approximately with the location of the ball of the foot. However, in other cases, bending axis **1402** could be disposed in any other portion of sole structure **150**. The location and orientation of bending axis **1402** may generally be controlled by the geometry of sole structure **150** as well as the shape and location of reinforcing member **130**.

The bending illustrated in FIG. **14** may occur because of the combination of weave orientation and geometry discussed above for sole structure **150**. Specifically, elongated bulging portion **326** increases the cross sectional strength of midfoot portion **12** and heel portion **14**, which increases stiffness and reduces bending in these areas. However, the tapered geometry of first tapered portion **370** and second tapered portion **372** may allow for some amount of bending along bending axis **1402**.

Referring now to FIG. **15**, a force is applied to proximal side **156** of forefoot portion **10**. Under this downward force, sole structure **150** may tend to resist bending. The geometry of first tapered portion **370** and second tapered portion **372** may help resist bending in this downward direction, especially along bending axis **1402**. As seen in FIGS. **14** and **15**, under this downward force, the displacement of forefoot portion **10** is substantially less than the displacement of forefoot portion **10** when an upwardly directed force is applied.

This configuration helps provide unidirectional bending for sole structure **150**, especially in forefoot portion **10**. This may help provide some energy return for a user during motions including walking, running, cutting and other ambulatory activities where an upward force us applied to forefoot portion **10** by a ground surface. Furthermore, this arrangement helps to resist downward bending of forefoot portion **10**, which may help provide better support during kicks or other activities where a downward force is applied to forefoot portion **10**.

While various embodiments have been described, the description is intended to be exemplary, rather than limiting and it will be apparent to those of ordinary skill in the art that many more embodiments and implementations are possible that are within the scope of the embodiments. Accordingly, the embodiments are not to be restricted except in light of the attached claims and their equivalents. Also, various modifications and changes may be made within the scope of the attached claims.

What is claimed is:

1. A sole structure for an article of footwear, comprising:
- a base portion, the base portion including a distal side and a proximal side;
- a bulging portion extending distally from the distal side of the base portion;
- the bulging portion comprising a peripheral portion and a central portion bounded by the peripheral portion;
- the central portion extending proximally from the proximal side of the base portion;
- wherein the central portion is recessed with respect to the peripheral portion on the distal side; and
- wherein the central portion is raised with respect to the peripheral portion on the proximal side.

2. The sole structure according to claim **1**, wherein the bulging portion is disposed in a heel portion of the sole structure.

3. The sole structure according to claim **1**, wherein the bulging portion extends through a midfoot portion of the sole structure and a forefoot portion of the sole structure.

4. The sole structure according to claim **3**, wherein the central portion has a teardrop-like shape.

5. The sole structure according to claim **3**, wherein the central portion comprises a forward portion and a rearward portion and wherein the forward portion is substantially wider than the rearward portion.

6. The sole structure according to claim **1**, wherein the sole structure comprises a composite material.

7. The sole structure according to claim **6**, wherein the bulging portion and the base portion comprise a single monolithic structure.

8. A sole structure for an article of footwear, comprising:
- a forefoot portion, a midfoot portion and a heel portion;
- a base portion extending through the forefoot portion, the midfoot portion and the heel portion;
- the base portion including a distal side and a proximal side;
- a first bulging portion extending distally from the distal side of the base portion, wherein the first bulging portion is disposed in the forefoot portion and the midfoot portion;
- a second bulging portion extending distally from the distal side of the base portion, wherein the second bulging portion is disposed in the heel portion;
- the first bulging portion comprising a first peripheral portion and a first central portion;
- wherein the first central portion is raised with respect to the first peripheral portion on the proximal side;
- the second bulging portion comprising a second peripheral portion and a second central portion;
- wherein the second central portion is raised with respect to the second peripheral portion on the proximal side; and
- wherein the first central portion is recessed with respect to the first peripheral portion on the distal side and wherein the second central portion is recessed with respect to the second peripheral portion on the distal side.

9. The sole structure according to claim **8**, wherein the thickness of the sole structure is approximately constant throughout the forefoot portion, the midfoot portion and the heel portion.

10. The sole structure according to claim **8**, wherein the sole structure comprises a composite material.

11. The sole structure according to claim **8**, wherein the sole structure comprises a carbon fiber composite material.

12. The sole structure according to claim **8**, wherein the sole structure consists essentially of two layers.

13. The sole structure according to claim **12**, wherein the sole structure comprises a first woven composite layer and a second woven composite layer and wherein a first weave orientation of the first layer of composite material is substantially similar to a second weave orientation of the second layer of composite material.

14. The sole structure according to claim **8**, wherein the first bulging portion has an approximately triangular peripheral shape.

15. The sole structure according to claim **8**, wherein the second bulging portion has an approximately rounded peripheral shape.

16. A sole structure for an article of footwear, comprising:
- a base portion;
- a bulging portion extending distally from the base portion;
- the bulging portion further comprising at least one tapering portion extending along an outer peripheral edge of the sole structure;
- the at least one tapering portion including a first end portion and a second end portion;
- wherein the depth of the at least one tapering portion decreases substantially gradually from the first end portion to the second end portion until the depth of the at least one tapering portion is approximately zero; and

wherein the width of the at least one tapering portion decreases substantially gradually from the first end portion to the second end portion.

17. The sole structure according to claim **16**, wherein the at least one tapering portion is disposed on a forefoot medial edge of the sole structure.

18. The sole structure according to claim **16**, wherein the at least one tapering portion is disposed in a forefoot lateral edge of the sole structure.

19. The sole structure according to claim **16**, wherein the bulging portion includes a first tapering portion and a second tapering portion.

20. The sole structure according to claim **16**, wherein the bulging portion is disposed in the forefoot portion and in the midfoot portion.

21. The sole structure according to claim **16**, wherein the at least one tapering portion is disposed in the forefoot portion.

22. The sole structure according to claim **16**, wherein the at least one tapering portion has a filament-like shape.

23. The sole structure according to claim **16**, wherein the sole structure has a bending axis disposed in the forefoot portion and wherein the sole structure is configured for unidirectional bending about the first bending axis.

* * * * *