US009300337B2

(12) **United States Patent**
Tasic et al.

(10) **Patent No.: US 9,300,337 B2**
(45) **Date of Patent: Mar. 29, 2016**

(54) **RECONFIGURABLE CARRIER-AGGREGATION RECEIVER AND FILTER**

(71) Applicant: **QUALCOMM Incorporated**, San Diego, CA (US)

(72) Inventors: **Aleksandar Miodrag Tasic**, San Diego, CA (US); **Klaas van Zalinge**, La Jolla, CA (US); **Gurkanwal Singh Sahota**, San Diego, CA (US); **Jeremy Darren Dunworth**, San Diego, CA (US)

(73) Assignee: **Qualcomm Incorporated**, San Diego, CA (US)

(*) Notice: Subject to any disclaimer, the term of this patent is extended or adjusted under 35 U.S.C. 154(b) by 144 days.

(21) Appl. No.: **14/136,893**

(22) Filed: **Dec. 20, 2013**

(65) **Prior Publication Data**

US 2015/0180523 A1 Jun. 25, 2015

(51) **Int. Cl.**
H04B 1/26 (2006.01)
H04B 1/00 (2006.01)
(Continued)

(52) **U.S. Cl.**
CPC ***H04B 1/26*** (2013.01); ***H03H 7/0161*** (2013.01); ***H03H 19/008*** (2013.01); ***H04B 1/006*** (2013.01); ***H04B 1/0057*** (2013.01)

(58) **Field of Classification Search**
CPC . H03H 7/0115; H03H 7/0138; H03H 7/0153; H03H 7/0161; H03H 7/0169; H03H 7/09; H03H 7/12; H03H 7/19; H03H 7/20; H03H 7/21; H03H 7/427; H03H 11/1204; H03H 11/1291; H03H 11/1295; H03H 19/00; H03H 19/002; H03H 19/004; H03H 19/006; H03H 19/008; H03H 2007/013; H03H 2007/0192; H04B 1/005; H04B 1/0057; H04B 1/006; H04B 1/0071; H04B 1/0075; H04B 1/0078; H04B 1/0082; H04B 1/0089; H04B 1/12; H04B 1/123; H04B 1/16; H04B 1/1607; H04B 1/1615; H04B 1/26; H04B 1/38; H04B 1/40; H04B 1/401; H04B 1/44
USPC 375/219, 220, 223, 232, 235, 297, 298, 375/308, 326–332, 349–351; 329/304, 329/306–310; 455/73, 75, 76, 78, 83, 86, 455/88, 160.1, 189.1, 191.1, 191.3, 193.2, 455/197.2, 197.3, 209, 210, 213, 225, 455/253.2, 260, 265, 307, 311, 339, 340; 708/300, 316, 319, 322, 323
See application file for complete search history.

(56) **References Cited**

U.S. PATENT DOCUMENTS

6,148,048 A 11/2000 Kerth et al.
6,417,737 B1 * 7/2002 Moloudi et al. 330/301
(Continued)

FOREIGN PATENT DOCUMENTS

WO 0128310 A2 4/2001
WO 2011071944 6/2011

OTHER PUBLICATIONS

International Search Report and Written Opinion—PCT/US2014/071086—ISA/EPO—Apr. 8, 2015.

Primary Examiner — Young Tse
(74) *Attorney, Agent, or Firm* — Smith Risley Tempel Santos LLC

(57) **ABSTRACT**

A device includes, a reconfigurable baseband filter configured to receive a communication signal having a first carrier and a second carrier, the first carrier and the second carrier having non-contiguous respective frequencies, the reconfigurable baseband filter having a first filter portion and a second filter portion, the first filter portion and the second filter portion each comprising respective first and second amplification stages, and a plurality of switches associated with the first filter portion and the second filter portion, the plurality of switches for configuring the reconfigurable baseband filter into a plurality of sub-filters, each configured to generate at least one of a low pass filter output and a bandpass filter output.

18 Claims, 9 Drawing Sheets

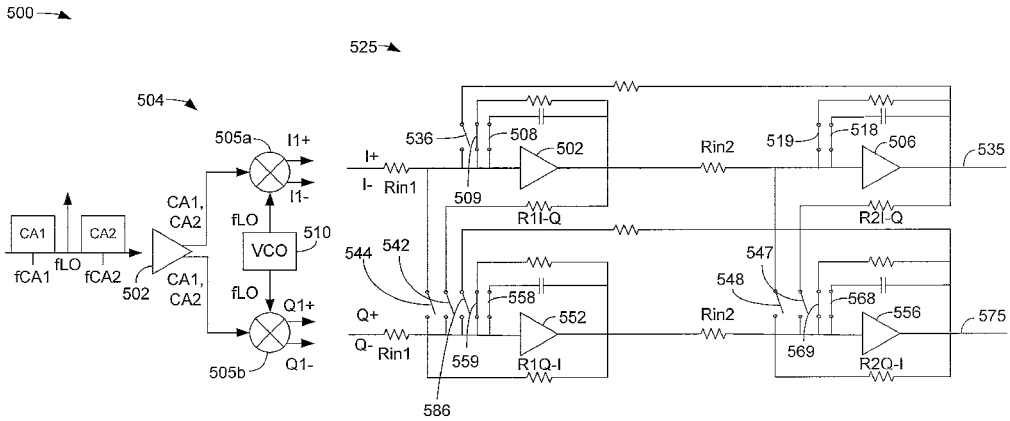

(51) **Int. Cl.**
H03H 19/00 (2006.01)
H03H 7/01 (2006.01)

(56) **References Cited**

U.S. PATENT DOCUMENTS

6,735,416 B1 5/2004 Marko et al.
6,975,840 B2 12/2005 Lin
7,529,322 B2 5/2009 Mak et al.
8,442,473 B1 5/2013 Kaukovuori et al.
2004/0209591 A1 10/2004 Martin et al.
2006/0128342 A1* 6/2006 Marholev 455/307
2012/0046004 A1 2/2012 Mirzaei et al.
2012/0194265 A1* 8/2012 Katsube et al. 327/554
2014/0065992 A1* 3/2014 Lee et al. 455/139
2014/0155014 A1* 6/2014 Leung et al. 455/318
2015/0084688 A1* 3/2015 Chang et al. 327/555

* cited by examiner

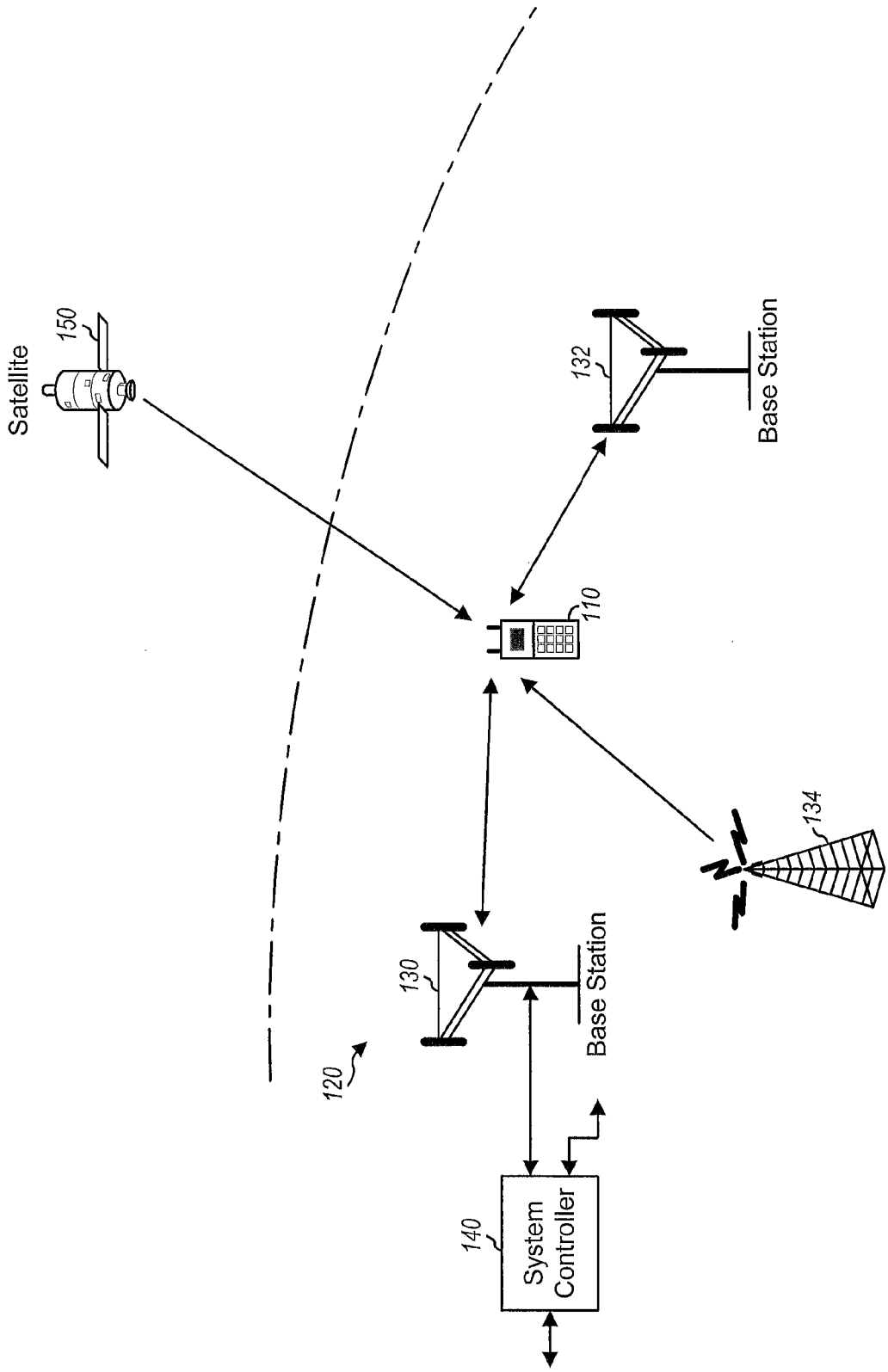
Satellite
150
120
130
Base Station
132
Base Station
110
134
140
System Controller

FIG. 1

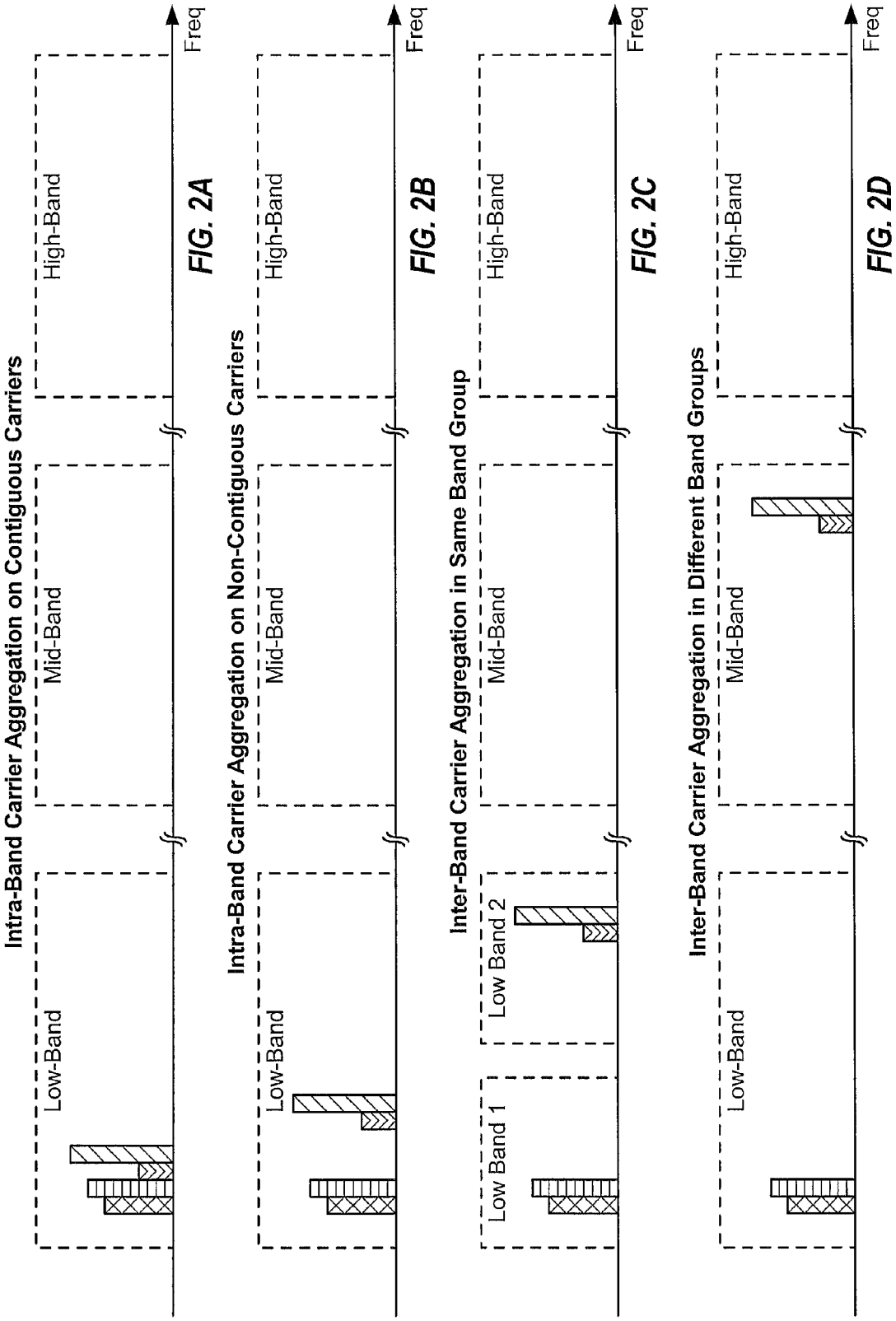

FIG. 2A

FIG. 2B

FIG. 2C

FIG. 2D

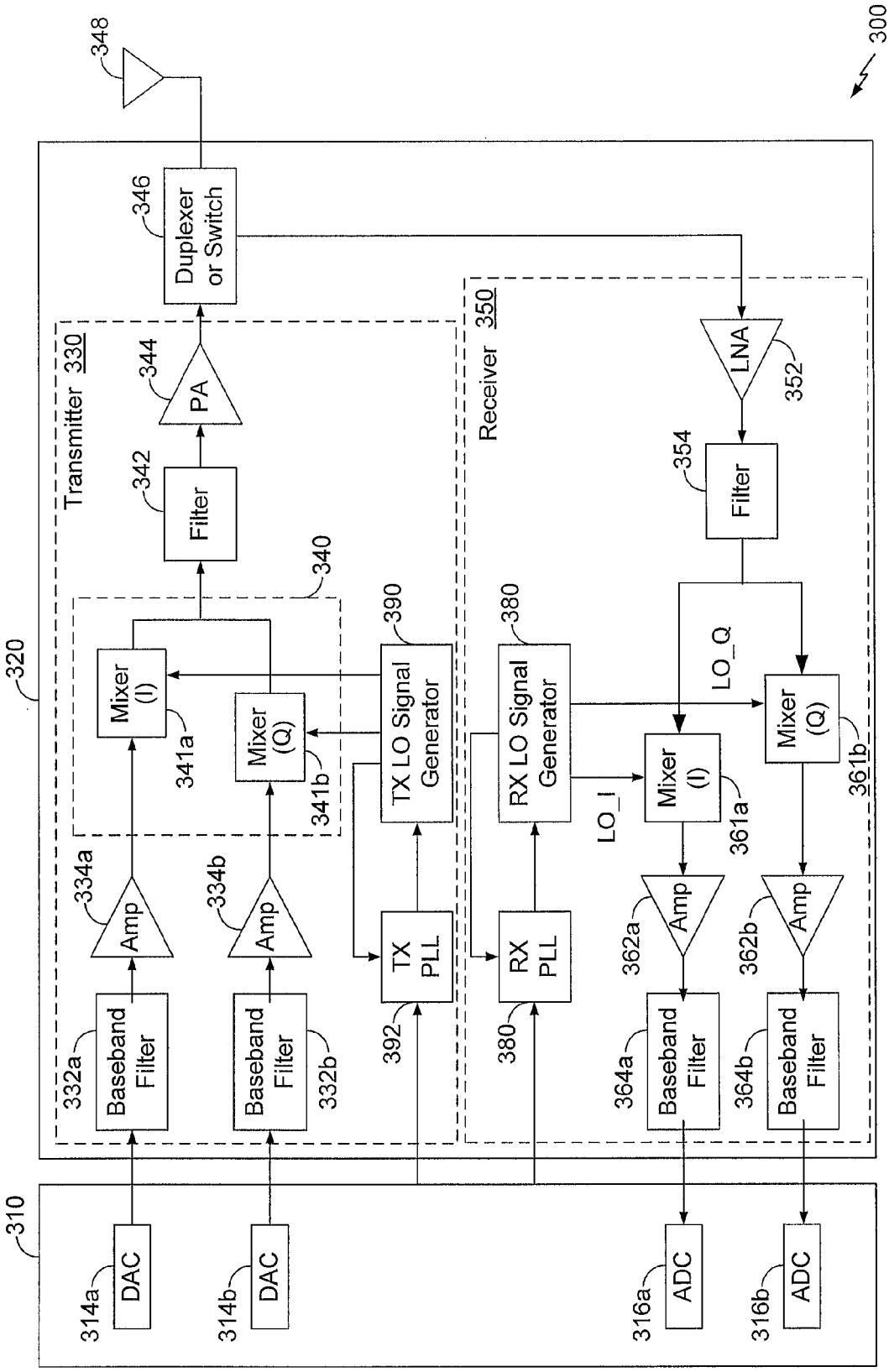
300
348
346
Duplexer or Switch
Transmitter 330
344
PA
342
Filter
340
Mixer (I)
341a
Mixer (Q)
341b
390
TX LO Signal Generator
334a
Amp
334b
Amp
332a
Baseband Filter
332b
Baseband Filter
392
TX PLL
320
310
314a
DAC
314b
DAC
Receiver 350
LNA
352
354
Filter
380
RX LO Signal Generator
LO_Q
LO_I
Mixer (I)
361a
Mixer (Q)
361b
362a
Amp
362b
Amp
380
RX PLL
364a
Baseband Filter
364b
Baseband Filter
316a
ADC
316b
ADC

FIG. 3

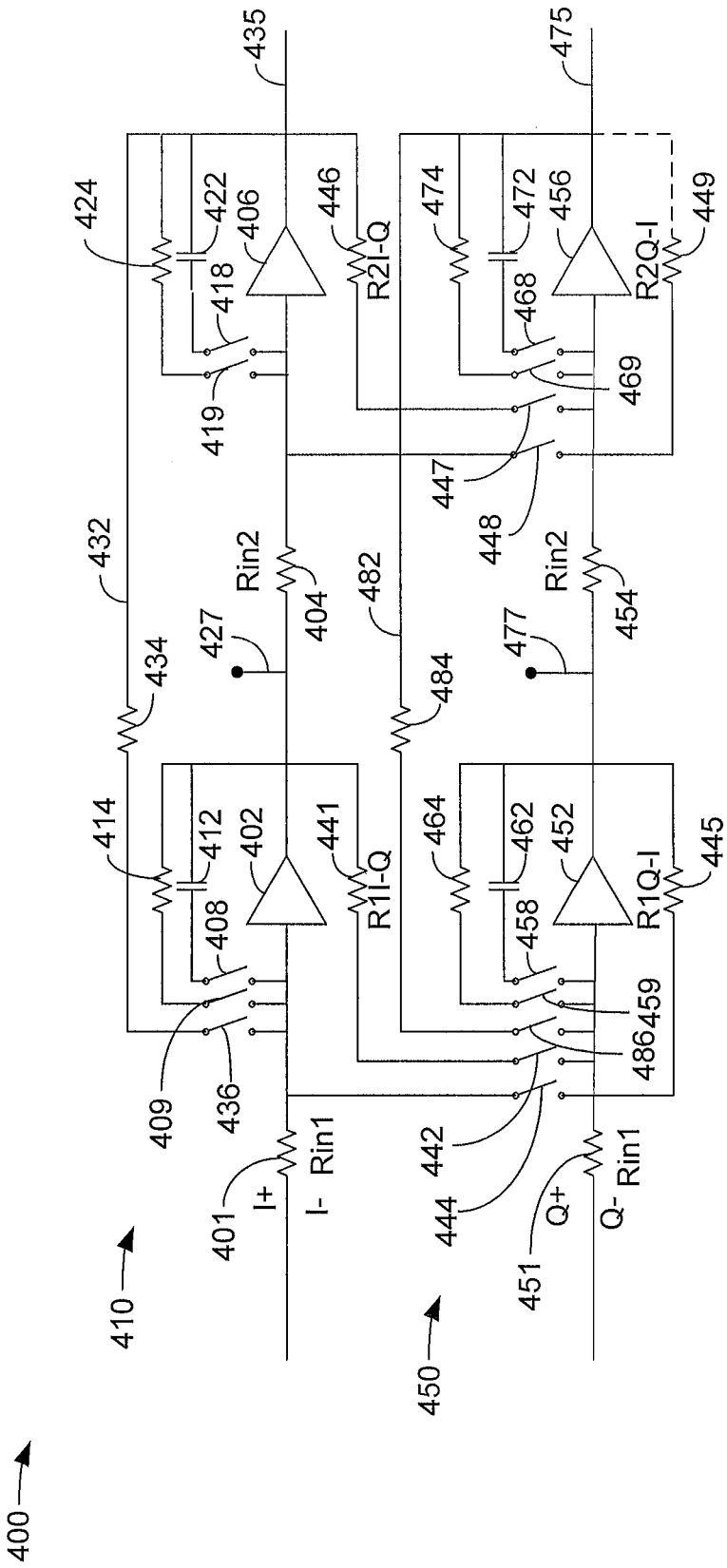
400
410
450
401
I+
I-
Rin1
442
444
451
Q+
Q-
Rin1
409
436
408
414
412
402
441
R1I-Q
464
462
452
R1Q-I
445
458
459
486
434
427
Rin2
404
482
484
477
Rin2
454
432
424
422
406
446
R2I-Q
474
472
456
R2Q-I
449
418
419
468
469
447
448
435
475

FIG. 4

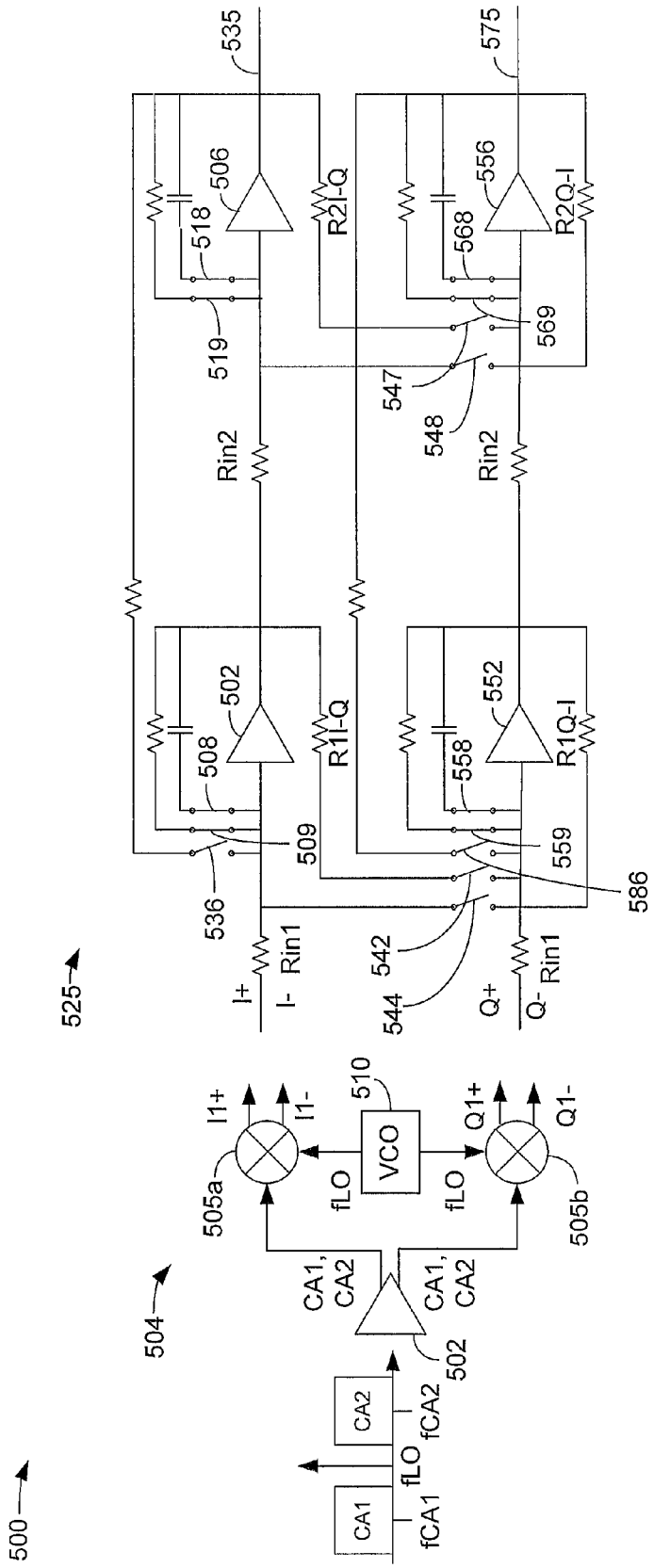
500
525
504
535
575
506
556
518
568
R2I-Q
R2Q-I
519
569
547
548
Rin2
Rin2
502
552
508
558
R1I-Q
R1Q-I
509
559
536
586
542
544
I+
I-
Rin1
Q+
Q-
Rin1
I1+
I1-
Q1+
Q1-
510
VCO
505a
505b
fLO
fLO
CA1,
CA2
CA1,
CA2
502
CA1
CA2
fCA1
fLO
fCA2

FIG. 5

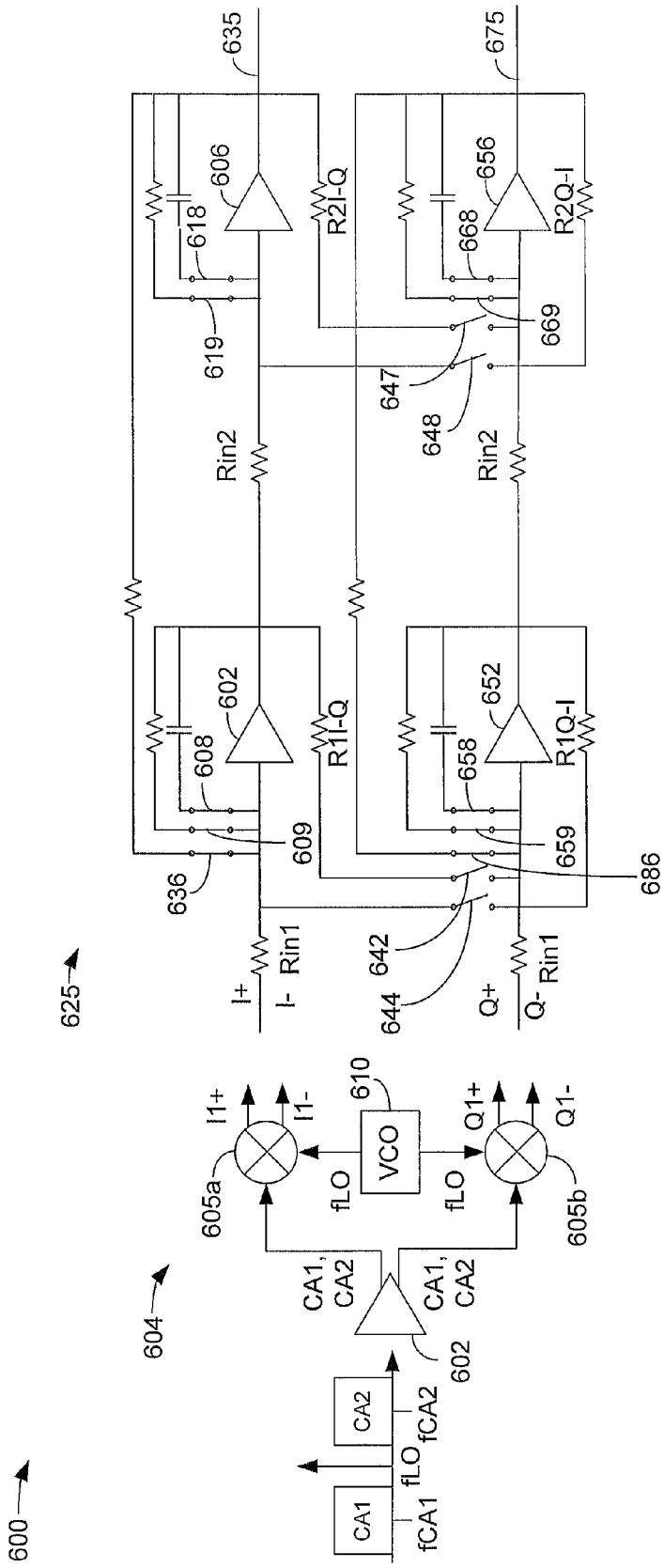
600
CA1
fCA1
fLO
CA2
fCA2
602
CA1, CA2
CA1, CA2
604
605a
605b
fLO
fLO
VCO
610
I1+
I1-
Q1+
Q1-
625
I+
I-
Rin1
Q+
Q-
Rin1
636
608
609
602
R1I-Q
R1Q-I
652
658
659
686
642
644
Rin2
Rin2
647
648
619
618
606
R2I-Q
R2Q-I
656
668
669
635
675

FIG. 6

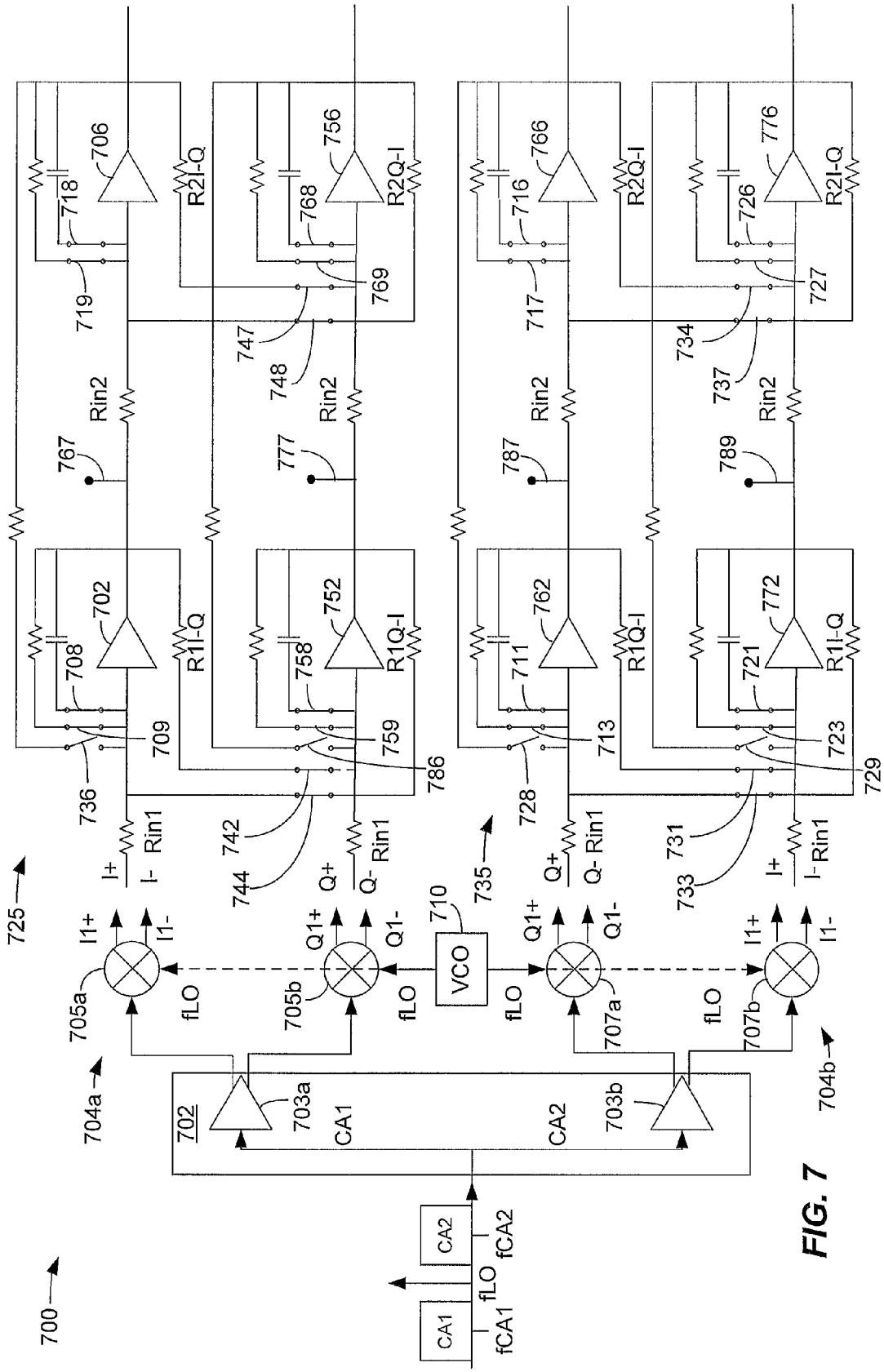
700
CA1
fCA1
fLO
CA2
fCA2
702
703a
CA1
CA2
703b
704a
704b
705a
705b
707a
707b
fLO
I1+
I1-
Q1+
Q1-
VCO
710
725
735
I+
I-
Q+
Q-
Rin1
Rin2
702
706
708
709
736
718
719
R1I-Q
R2I-Q
752
756
758
759
742
744
786
768
769
747
748
767
777
762
766
711
713
728
716
717
787
772
776
721
723
729
731
733
726
727
734
737
789
R1Q-I
R2Q-I

FIG. 7

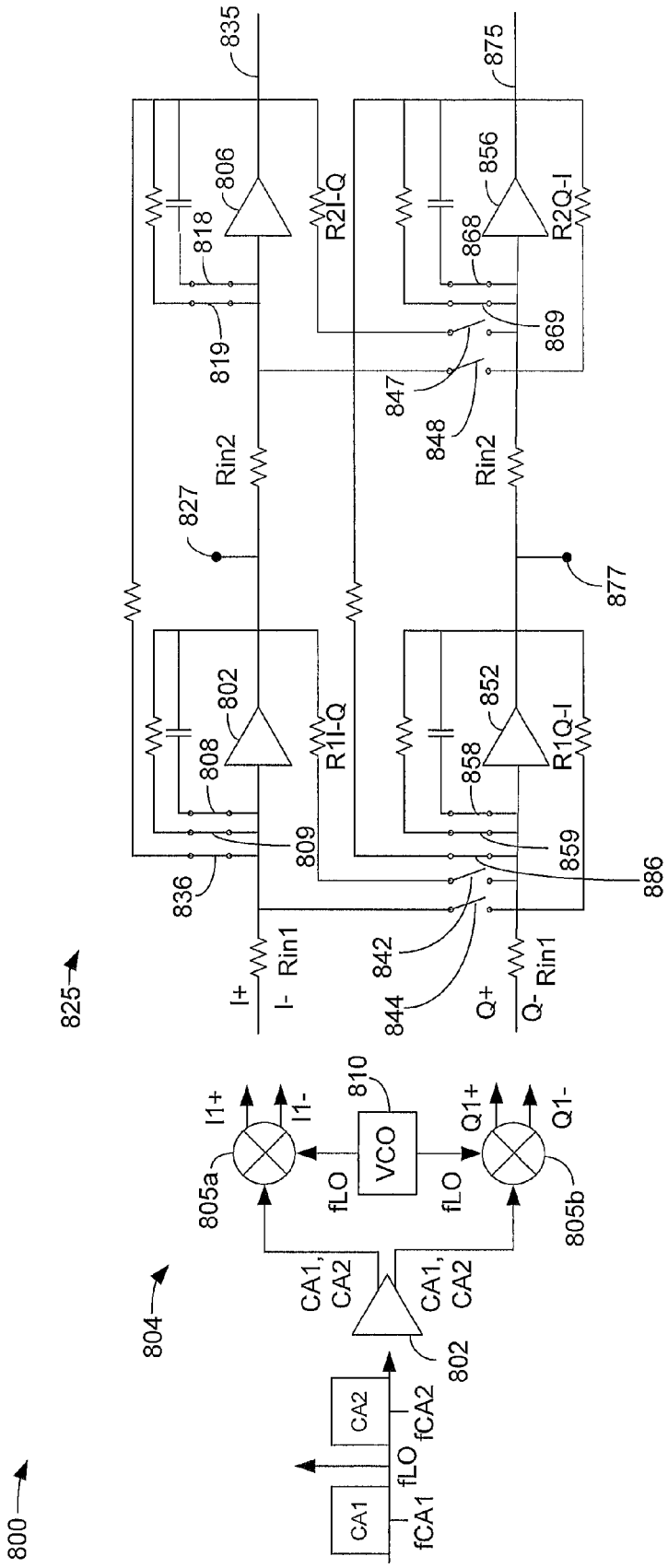
800
CA1
fCA1
fLO
CA2
fCA2
802
CA1, CA2
CA1, CA2
804
805a
805b
fLO
fLO
VCO
810
I1+
I1-
Q1+
Q1-
825
I+
I-
Rin1
Q+
Q-
Rin1
842
844
836
809
808
802
R1I-Q
858
852
R1Q-I
859
886
827
877
Rin2
Rin2
847
848
819
818
806
R2I-Q
868
856
R2Q-I
869
835
875

FIG. 8

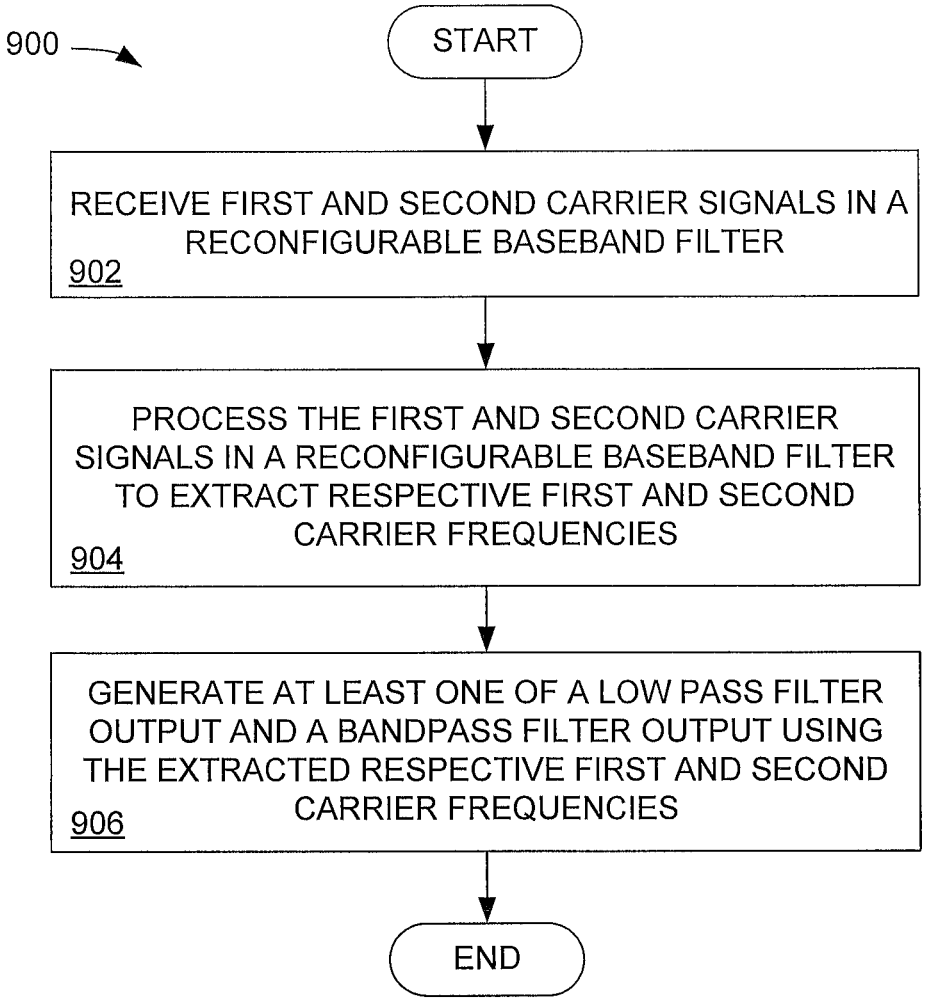
900
START
RECEIVE FIRST AND SECOND CARRIER SIGNALS IN A RECONFIGURABLE BASEBAND FILTER
902
PROCESS THE FIRST AND SECOND CARRIER SIGNALS IN A RECONFIGURABLE BASEBAND FILTER TO EXTRACT RESPECTIVE FIRST AND SECOND CARRIER FREQUENCIES
904
GENERATE AT LEAST ONE OF A LOW PASS FILTER OUTPUT AND A BANDPASS FILTER OUTPUT USING THE EXTRACTED RESPECTIVE FIRST AND SECOND CARRIER FREQUENCIES
906
END

FIG. 9

RECONFIGURABLE CARRIER-AGGREGATION RECEIVER AND FILTER

BACKGROUND

1. Field

The present disclosure relates generally to electronics, and more specifically to transmitters and receivers.

2. Background

In a radio frequency (RF) transceiver, a communication signal is typically received and downconverted by receive circuitry, sometimes referred to as a receive chain. A receive chain typically includes a receive filter, a low noise amplifier (LNA), a mixer, a local oscillator (LO), a voltage controlled oscillator (VCO), a baseband filter, and other components, to recover the information contained in the communication signal. The transceiver also includes circuitry that enables the transmission of a communication signal to a receiver in another transceiver. The transceiver may be able to operate over multiple frequency ranges, typically referred to a frequency bands. Moreover, a single transceiver may be configured to operate using multiple carrier signals that may occur in the same frequency band, but that may not overlap in actual frequency, an arrangement referred to as non-contiguous carriers.

In some instances, it is desirable to have a single transmitter or receiver that is configured to operate using multiple transmit frequencies and/or multiple receive frequencies. For a receiver to be able to simultaneously receive two or more receive signals, the concurrent operation of two or more receive paths is required. Such systems are sometimes referred to as "carrier-aggregation" systems. The term "carrier-aggregation" may refer to systems that include inter-band carrier aggregation and intra-band carrier aggregation. Intra-band carrier aggregation refers to the processing of two separate and non-contiguous carrier signals that occur in the same communication band. Currently, even though these non-contiguous carriers may be close together, a separate receive chain is typically needed to process each carrier. Unfortunately, using a separate receive chain to process the non-contiguous carriers is power intensive and consumes valuable space on the medium on which the receiver is fabricated.

Therefore, it would be desirable to have a way to downconvert multiple non-contiguous carriers that overcomes the above-mentioned limitations.

BRIEF DESCRIPTION OF THE DRAWINGS

In the figures, like reference numerals refer to like parts throughout the various views unless otherwise indicated. For reference numerals with letter character designations such as "102a" or "102b", the letter character designations may differentiate two like parts or elements present in the same figure. Letter character designations for reference numerals may be omitted when it is intended that a reference numeral encompass all parts having the same reference numeral in all figures.

FIG. **1** is a diagram showing a wireless device communicating with a wireless communication system.

FIG. **2**A is a graphical diagram showing an example of contiguous intra-band carrier-aggregation (CA).

FIG. **2**B is a graphical diagram showing an example of non-contiguous intra-band CA.

FIG. **2**C is a graphical diagram showing an example of inter-band CA in the same band group.

FIG. **2**D is a graphical diagram showing an example of inter-band CA in different band groups.

FIG. **3** is a block diagram of an exemplary design of wireless device in FIG. **1**.

FIG. **4** is a schematic diagram illustrating an exemplary embodiment of a reconfigurable baseband filter that can be used in an intra-band carrier aggregation receiver to filter a received signal using a single local oscillator (LO) path.

FIG. **5** is a schematic diagram illustrating an exemplary embodiment of a reconfigurable receiver and baseband filter configured as a low pass filter that can be used in an intra-band carrier aggregation receiver to filter a received signal using a single local oscillator (LO) path, in which a single receive chain processes the receive signal.

FIG. **6** is a schematic diagram illustrating another exemplary embodiment of a reconfigurable receiver and baseband filter configured as a low pass filter that can be used in an intra-band carrier aggregation receiver to filter a received signal using a single local oscillator (LO) path, in which a single receive chain processes the receive signal.

FIG. **7** is a schematic diagram illustrating an exemplary embodiment of a reconfigurable receiver and baseband filter that can be used in an intra-band carrier aggregation receiver to filter a received signal using a single local oscillator (LO) path, in which a single LNA provides the receive signal as two separate outputs to two separate receive chains.

FIG. **8** is a schematic diagram illustrating another exemplary embodiment of a reconfigurable receiver and baseband filter configured as a bandpass filter that can be used in an intra-band carrier aggregation receiver to filter a received signal using a single local oscillator (LO) path, in which a single receive chain processes the receive signal.

FIG. **9** is a flow chart describing the operation of an exemplary embodiment of a reconfigurable carrier-aggregation receiver and filter that can be used to process non-contiguous carriers.

DETAILED DESCRIPTION

The word "exemplary" is used herein to mean "serving as an example, instance, or illustration." Any aspect described herein as "exemplary" is not necessarily to be construed as preferred or advantageous over other aspects.

In this description, the term "application" may also include files having executable content, such as: object code, scripts, byte code, markup language files, and patches. In addition, an "application" referred to herein, may also include files that are not executable in nature, such as documents that may need to be opened or other data files that need to be accessed.

The term "content" may also include files having executable content, such as: object code, scripts, byte code, markup language files, and patches. In addition, "content" referred to herein, may also include files that are not executable in nature, such as documents that may need to be opened or other data files that need to be accessed.

As used herein, the terms "interfering signal," "jammer," "jammer signal," and "TX jammer" are used to describe a signal present at a receiver that can degrade the receiver's performance in detecting and downconverting a desired receive signal.

Exemplary embodiments of the disclosure are directed toward a reconfigurable carrier-aggregation receiver and filter that allows downconverting non-contiguous carriers in an intra-band carrier aggregation mode with a single local oscillator (LO) path, single voltage controlled oscillator (VCO), and singe phase locked loop (PLL), thereby reducing complexity and reducing current consumption of the receiver in

an intra-band carrier aggregation mode. When the LO frequency is located substantially halfway between the two non-contiguous carriers, a single LO/VCO/PLL path can be used to downconvert two non-contiguous carriers.

Using complex signal processing at the baseband, both carriers (one at positive frequency (above LO frequency before downconversion) and one at negative frequency (below LO frequency before downconversion) are filtered to extract the respective baseband information signal prior to analog-to-digital conversion. Spurious performance improves by eliminating one LO/VCO/PLL path for intra-band carrier aggregation reception.

Exemplary embodiments of a reconfigurable carrier-aggregation receiver and filter can be constructed with complex poles (providing sharp filtering) or real poles (one or two stage with modest filtering), and can be configured as a complex filer that can distinguish positive and negative frequencies.

In an exemplary embodiment, the reconfigurable carrier-aggregation receiver and filter can form a complex filter using two filter instances, one for each carrier, and can be used to extract the carriers at the baseband using a single LO.

FIG. **1** is a diagram showing a wireless device **110** communicating with a wireless communication system **120**. The wireless communication system **120** may be a Long Term Evolution (LTE) system, a Code Division Multiple Access (CDMA) system, a Global System for Mobile Communications (GSM) system, a wireless local area network (WLAN) system, or some other wireless system. A CDMA system may implement Wideband CDMA (WCDMA), CDMA 1×, Evolution-Data Optimized (EVDO), Time Division Synchronous CDMA (TD-SCDMA), or some other version of CDMA. For simplicity, FIG. **1** shows wireless communication system **120** including two base stations **130** and **132** and one system controller **140**. In general, a wireless communication system may include any number of base stations and any set of network entities.

The wireless device **110** may also be referred to as a user equipment (UE), a mobile station, a terminal, an access terminal, a subscriber unit, a station, etc. Wireless device **110** may be a cellular phone, a smartphone, a tablet, a wireless modem, a personal digital assistant (PDA), a handheld device, a laptop computer, a smartbook, a netbook, a tablet, a cordless phone, a wireless local loop (WLL) station, a Bluetooth device, etc. Wireless device **110** may communicate with wireless communication system **120**. Wireless device **110** may also receive signals from broadcast stations (e.g., a broadcast station **134**), signals from satellites (e.g., a satellite **150**) in one or more global navigation satellite systems (GNSS), etc. Wireless device **110** may support one or more radio technologies for wireless communication such as LTE, WCDMA, CDMA 1×, EVDO, TD-SCDMA, GSM, 802.11, etc.

Wireless device **110** may support carrier aggregation, which is operation on multiple carriers. Carrier aggregation may also be referred to as multi-carrier operation. Wireless device **110** may be able to operate in low-band (LB) covering frequencies lower than 1000 megahertz (MHz), mid-band (MB) covering frequencies from 1000 MHz to 2300 MHz, and/or high-band (HB) covering frequencies higher than 2300 MHz. For example, low-band may cover 698 to 960 MHz, mid-band may cover 1475 to 2170 MHz, and high-band may cover 2300 to 2690 MHz and 3400 to 3800 MHz. Low-band, mid-band, and high-band refer to three groups of bands (or band groups), with each band group including a number of frequency bands (or simply, "bands"). Each band may cover up to 200 MHz and may include one or more carriers. Each carrier may cover up to 20 MHz in LTE. LTE Release 11 supports 35 bands, which are referred to as LTE/UMTS bands and are listed in 3GPP TS 36.101. Wireless device **110** may be configured with up to five carriers in one or two bands in LTE Release 11.

In general, carrier aggregation (CA) may be categorized into two types—intra-band CA and inter-band CA. Intra-band CA refers to operation on multiple carriers within the same band. Inter-band CA refers to operation on multiple carriers in different bands.

FIG. **2**A is a graphical diagram showing an example of contiguous intra-band carrier-aggregation (CA). In the example shown in FIG. **2**A, wireless device **110** is configured with four contiguous carriers in one band in low-band. Wireless device **110** may send and/or receive transmissions on the four contiguous carriers within the same band.

FIG. **2**B is a graphical diagram showing an example of non-contiguous intra-band CA. In the example shown in FIG. **2**B, wireless device **110** is configured with four non-contiguous carriers in one band in low-band. The carriers may be separated by 5 MHz, 10 MHz, or some other amount. Wireless device **110** may send and/or receive transmissions on the four non-contiguous carriers within the same band.

FIG. **2**C is a graphical diagram showing an example of inter-band CA in the same band group. In the example shown in FIG. **2**C, wireless device **110** is configured with four carriers in two bands in low-band. Wireless device **110** may send and/or receive transmissions on the four carriers in different bands in the same band group.

FIG. **2**D is a graphical diagram showing an example of inter-band CA in different band groups. In the example shown in FIG. **2**D, wireless device **110** is configured with four carriers in two bands in different band groups, which include two carriers in one band in low-band and two carriers in another band in mid-band. Wireless device **110** may send and/or receive transmissions on the four carriers in different bands in different band groups.

FIGS. **2**A to **2**D show four examples of carrier aggregation. Carrier aggregation may also be supported for other combinations of bands and band groups.

FIG. **3** is a block diagram showing a wireless communication device **300** in which the exemplary techniques of the present disclosure may be implemented. FIG. **3** shows an example of a transceiver **320**. In general, the conditioning of the signals in a transmitter **330** and a receiver **350** may be performed by one or more stages of amplifier, filter, upconverter, downconverter, etc. These circuit blocks may be arranged differently from the configuration shown in FIG. **3**. Furthermore, other circuit blocks not shown in FIG. **3** may also be used to condition the signals in the transmitter and receiver. Unless otherwise noted, any signal in FIG. **3**, or any other figure in the drawings, may be either single-ended or differential. Some circuit blocks in FIG. **3** may also be omitted.

In the example shown in FIG. **3**, wireless device **300** generally comprises a transceiver **320** and a data processor **310**. The data processor **310** may include a memory (not shown) to store data and program codes, and may generally comprise analog and digital processing elements. The transceiver **320** includes a transmitter **330** and a receiver **350** that support bi-directional communication. In general, wireless device **300** may include any number of transmitters and/or receivers for any number of communication systems and frequency bands. All or a portion of the transceiver **320** may be implemented on one or more analog integrated circuits (ICs), RF ICs (RFICs), mixed-signal ICs, etc.

A transmitter or a receiver may be implemented with a super-heterodyne architecture or a direct-conversion architecture. In the super-heterodyne architecture, a signal is frequency-converted between radio frequency (RF) and baseband in multiple stages, e.g., from RF to an intermediate frequency (IF) in one stage, and then from IF to baseband in another stage for a receiver. In the direct-conversion architecture, a signal is frequency converted between RF and baseband in one stage. The super-heterodyne and direct-conversion architectures may use different circuit blocks and/or have different requirements. In the example shown in FIG. **3**, transmitter **330** and receiver **350** are implemented with the direct-conversion architecture.

In the transmit path, the data processor **310** processes data to be transmitted and provides in-phase (I) and quadrature (Q) analog output signals to the transmitter **330**. In an exemplary embodiment, the data processor **310** includes digital-to-analog-converters (DAC's) **314***a* and **314***b* for converting digital signals generated by the data processor **310** into the I and Q analog output signals, e.g., I and Q output currents, for further processing.

Within the transmitter **330**, baseband filters **332***a* and **332***b* filter the I and Q analog transmit signals, respectively, to remove undesired images caused by the prior digital-to-analog conversion. The baseband filters **332***a* and **332***b* can be lowpass filters or bandpass filters, depending on the implementation. Amplifiers (Amp) **334***a* and **334***b* amplify the signals from baseband filters **332***a* and **332***b*, respectively, and provide I and Q baseband signals. An upconverter **340** upconverts the I and Q baseband signals with I and Q transmit (TX) local oscillator (LO) signals from a TX LO signal generator **390** and provides an upconverted signal. A filter **342** filters the upconverted signal to remove undesired images caused by the frequency upconversion as well as noise in a receive frequency band. A power amplifier (PA) **344** amplifies the signal from filter **342** to obtain the desired output power level and provides a transmit RF signal. The transmit RF signal is routed through a duplexer or switch **346** and transmitted via an antenna **348**.

In the receive path, antenna **348** receives communication signals and provides a received RF signal, which is routed through duplexer or switch **346** and provided to a low noise amplifier (LNA) **352**. The duplexer **346** is designed to operate with a specific RX-to-TX duplexer frequency separation, such that RX signals are isolated from TX signals. The received RF signal is amplified by LNA **352** and filtered by a filter **354** to obtain a desired RF input signal. Downconversion mixers **361***a* and **361***b* mix the output of filter **354** with I and Q receive (RX) LO signals (i.e., LO_I and LO_Q) from an RX LO signal generator **380** to generate I and Q baseband signals. The I and Q baseband signals are amplified by amplifiers **362***a* and **362***b* and further filtered by baseband filters **364***a* and **364***b* to obtain I and Q analog input signals, which are provided to data processor **310**. The baseband filters **364***a* and **364***b* can be lowpass filters or bandpass filters, depending on the implementation. In the exemplary embodiment shown, the data processor **310** includes analog-to-digital-converters (ADC's) **316***a* and **316***b* for converting the analog input signals into digital signals to be further processed by the data processor **310**.

In FIG. **3**, TX LO signal generator **390** generates the I and Q TX LO signals used for frequency upconversion, while RX LO signal generator **380** generates the I and Q RX LO signals used for frequency downconversion. Each LO signal is a periodic signal with a particular fundamental frequency. A phase locked loop (PLL) **392** receives timing information from data processor **310** and generates a control signal used to adjust the frequency and/or phase of the TX LO signals from LO signal generator **390**. Similarly, a PLL **382** receives timing information from data processor **310** and generates a control signal used to adjust the frequency and/or phase of the RX LO signals from LO signal generator **380**.

Wireless device **300** may support CA and may (i) receive multiple downlink signals transmitted by one or more cells on multiple downlink carriers at different frequencies and/or (ii) transmit multiple uplink signals to one or more cells on multiple uplink carriers. In an exemplary embodiment, the wireless device **300** supports intra-carrier aggregation and can use a single LO signal to downconvert multiple intra-CA receive signals.

FIG. **4** is a schematic diagram illustrating an exemplary embodiment of a reconfigurable baseband filter **400** that can be used in a reconfigurable intra-band carrier aggregation receiver to filter a received signal using a single local oscillator (LO) path. The baseband filter **400** is one exemplary embodiment of the baseband filter **364***a* and the baseband filter **364***b* shown in FIG. **3**. In an exemplary embodiment the filter **400** is shown in a single-ended embodiment, but is configured to receive differential in-phase (I+, I−) and differential quadrature (Q+, Q−) components of a received signal provided by the low noise amplifier (LNA, FIG. **3**), mixer **361***a* and **361***b* (FIG. **3**) and the amplifiers **362***a* and **362***b* (FIG. **3**). In an exemplary embodiment, the differential in-phase (I+, I−) components are processed by a first filter portion **410** and the differential quadrature (Q+, Q−) components are processed by a second filter portion **450**.

The filter **400** can be configured to operate in multiple modes that can form multiple sub-filters. The multiple modes make use of different components in the filter **400**. For example, with reference to the first filter portion **410**, a first mode comprises using a first input resistance **401**, a first in-phase (I) amplifier stage **402**, a second input resistance **404** and a second I amplifier stage **406**. In an exemplary embodiment, the first I amplifier stage **402** may comprise a transimpedance amplifier (TIA) stage and the second I amplifier stage **406** may comprise a pseudo-balanced amplifier (PBA) stage. However, other amplification technologies and architectures are possible. The first I amplifier stage **402** comprises a resistive/capacitive (RC) feedback network comprising a capacitance **412** connected between the input and the output of the first I amplifier stage **402** through a switch **408**; and a resistance **414** connected between the input and the output of the first I amplifier stage **402** through a switch **409**. The second I amplifier stage **406** comprises a resistive/capacitive (RC) feedback network comprising a capacitance **422** connected between the input and the output of the second I amplifier stage **406** through a switch **418**; and a resistance **424** connected between the input and the output of the second I amplifier stage **406** through a switch **419**. The switches **408**, **409**, **418** and **419** can be fabricated using any of a variety of transistor devices and technologies and can be controlled to be conductive or non-conductive using control logic (not shown).

With reference to the second filter portion **450**, the first mode comprises using a first input resistance **451**, a first quadrature (Q) amplifier stage **452**, a second input resistance **454** and a second Q amplifier stage **456**. In an exemplary embodiment, the first Q amplifier stage **452** may comprise a transimpedance amplifier (TIA) stage and the second amplifier stage **456** may comprise a pseudo-balanced amplifier (PBA) stage. However, other amplification technologies and architectures are possible. The first Q amplifier stage **452** comprises a resistive/capacitive (RC) feedback network comprising a capacitance **462** connected between the input and

the output of the first Q amplifier stage **452** through a switch **458**; and a resistance **464** connected between the input and the output of the first Q amplifier stage **452** through a switch **459**.

The second Q amplifier stage **456** comprises a resistive/capacitive (RC) feedback network comprising a capacitance **472** connected between the input and the output of the second Q amplifier stage **456** through a switch **468**; and a resistance **474** connected between the input and the output of the second Q amplifier stage **456** through a switch **469**. The switches **458**, **459**, **468** and **469** can be fabricated using any of a variety of transistor devices and can be controlled to be conductive or non-conductive using control logic (not shown).

When the switches **408**, **409**, **458** and **459** are conductive, a one-stage filter with real poles can be constructed (with RC feedback around the first I amplifier stage **402** and the first Q amplifier stage **452**. When the switches **408**, **409**, **418**, **419**, **458**, **459**, **468** and **469** are conductive, a two-stage filter with real poles can be constructed (with RC-feedback around the first I amplifier stage **402**, first Q amplifier stage **452** and around the second I amplifier stage **406**, and the second Q amplifier stage **456**. A real filter having real poles provides modest filtering with reduced complexity.

As mentioned above, the filter **400** can be configured to operate in multiple modes. The multiple modes make use of different components in the filter **400**. With continued reference to the first filter portion **410**, a second mode adds a first negative feedback path **432** from the output of the second I amplifier **406**, through a resistance **434** and through a switch **436** coupled between the resistance **434** and the input to the first I amplifier stage **402**. In a differential application, the feedback path **432** provides negative feedback from the positive output of the second I amplifier stage **406** to the negative input of the first I amplifier stage **402** and from the negative output of the second I amplifier stage **406** to the positive input of the first I amplifier stage **402**.

Similarly, with continued reference to the second filter portion **450**, a second mode adds a second negative feedback path **482** from the output of the second Q amplifier stage **456**, through a resistance **484** and through a switch **486** coupled between the resistance **484** and the input to the first Q amplifier stage **452**. In a differential application, the feedback path **482** provides negative feedback from the positive output of the second Q amplifier stage **456** to the negative input of the first Q amplifier stage **452** and from the negative output of the second Q amplifier stage **456** to the positive input of the first Q amplifier stage **452**. The switches **436** and **486** can be fabricated using any of a variety of transistor devices and can be controlled to be conductive or non-conductive using control logic (not shown).

When the switches **436** and **486** are conductive, along with the switches **408**, **409**, **418**, **419**, **458**, **459**, **468** and **469** being conductive, a real filter with complex poles can be constructed (including RC feedback around first I amplifier stage **402** and first Q amplifier stage **452**; and second I amplifier stage **406** and second Q amplifier stage **456**, with overall negative feedback through the first negative feedback path **432** and the second negative feedback path **482**. In this exemplary embodiment, the low pass filter outputs are taken from the output of the second I amplifier stage **406** on connection **435** and from the output of the second Q amplifier stage **456** on connection **475**. This filter mode offers sharp filtering at the expense of increased complexity.

A third mode couples the first filter portion **410** to the second filter portion **450**. An output of the first I amplifier stage **402** is coupled through a resistance **441** to an input of the first Q amplifier stage **452** through a switch **442**. An output of the first Q amplifier stage **452** is coupled through a resistance **445** to the input of the first I amplifier stage **402** through a switch **444**. This allows the first I amplifier stage **402** to also operate on the Q output of the first Q amplifier stage **452**; and allows the first Q amplifier stage **452** to operate on the I output of the first I amplifier stage **402**.

An output of the second I amplifier stage **406** is coupled through a resistance **446** to an input of the second Q amplifier stage **456** through a switch **447**. An output of the second Q amplifier stage **456** is coupled through a resistance **449** to the input of the second I amplifier stage **406** through a switch **448**. This allows the second I amplifier stage **406** to also operate on the Q output of the second Q amplifier stage **456**; and allows the second Q amplifier stage **456** to operate on the I output of the second I amplifier stage **406**. The switches **442**, **444**, **447** and **448** can be fabricated using any of a variety of transistor devices and technologies and can be controlled to be conductive or non-conductive using control logic (not shown).

When the switches **442**, **444**, **447** and **448** are conductive, (along with the switches **408**, **409**, **418**, **419**, **458**, **459**, **468** and **469** being conductive, and with the switches **436** and **486** being non-conductive), a complex bandpass filter can be constructed. The bandpass filter outputs are taken from the output of the first I amplifier stage **402** on connection **427** and from the output of the first Q amplifier stage **452** on connection **477**. This filter offers filtering of positive or negative frequencies (depending on the I/Q arrangement) with modest image rejection.

FIG. **5** is a schematic diagram illustrating an exemplary embodiment of a reconfigurable receiver and baseband filter configured as a low pass filter that can be used in an intra-band carrier aggregation receiver to filter a received signal using a single local oscillator (LO) path, in which a single receive chain processes the receive signal. The receiver **500** comprises a low noise amplifier (LNA) **502** configured to receive two non-contiguous carriers CA**1** and CA**2**, and provide the carriers CA**1** and CA**2** to a mixer **504**. The mixer **504** comprises an in-phase (I) mixer **505***a* and a quadrature (Q) mixer **505***b*. The mixer **504** receives a single local oscillator (LO) signal generated by a receive LO signal generator (referred to as a voltage controlled oscillator (VCO) **510**. The VCO **510** includes a phase locked loop (PLL) (not shown for simplicity).

The baseband filter **525** comprises a first I amplifier stage **502**, a second I amplifier stage **506**, a first Q amplifier stage **552** and a second Q amplifier stage **556**. Only the state of the switches for the baseband filter **525** will be described in detail because the active and passive elements of the filter **525** are identical to the active and passive elements of the baseband filter **400** described in FIG. **4**. Reference numerals for the passive resistances and capacitances have been omitted for ease of illustration. In an exemplary embodiment, the baseband filter **525** can be configured as a real filter having real poles. In a situation where interfering signals (also referred to as "jammers") between carriers are small, in that the interfering signal is at an amplitude, or power, lower than the amplitude, or power, of the non-contiguous carriers CA**1** and CA**2**, a real low pass filter having real poles is likely sufficient to downconvert the non-contiguous carriers CA**1** and CA**2**. When the switches **508**, **509**, **518**, **519**, **558**, **559**, **568** and **569** associated with the first mode are conductive; and when the switches **536** and **586** associated with the second mode are non-conductive; and the switches **542**, **544**, **547** and **548** associated with the third mode are non-conductive, a real filter with real poles can be constructed.

In this exemplary embodiment, a single LO frequency can be used to downconvert the two non-contiguous carriers CA**1** and CA**2**. A single LNA **502** and mixer **504** are used because

the interfering signals between the non-contiguous carriers CA**1** and CA**2** are assumed to be small relative to the carriers CA**1** and CA**1**. A single LO (generating a single fLO) located at a frequency substantially halfway between the respective frequencies the two carriers CA**1** (fCA**1**) and CA**2** (fCA**2**) can be used to downconvert both carriers, one to a positive frequency and the other to a negative frequency. In this exemplary embodiment, complex filtering is not needed in the analog domain due to the presence of a small interfering signal, thus allowing the carriers to be extracted in the digital domain. The low pass filter outputs are taken from the output of the second I amplifier stage **506** on connection **535** and from the output of the second Q amplifier stage **556** on connection **575**.

FIG. **6** is a schematic diagram illustrating another exemplary embodiment of a reconfigurable receiver and baseband filter configured as a low pass filter that can be used in an intra-band carrier aggregation receiver to filter a received signal using a single local oscillator (LO) path, in which a single receive chain processes the receive signal. The receiver **600** comprises a low noise amplifier (LNA) **602** configured to receive two non-contiguous carriers CA**1** and CA**2**, and provide the carriers CA**1** and CA**2** to a mixer **604**. The mixer **604** comprises an in-phase (I) mixer **605***a* and a quadrature (Q) mixer **605***b*. The mixer **604** receives a single local oscillator (LO) signal generated by a receive LO signal generator (referred to as a voltage controlled oscillator (VCO) **610**. The VCO **610** includes a phase locked loop (PLL) (not shown for simplicity).

The baseband filter **625** comprises a first I amplifier stage **602**, a second I amplifier stage **606**, a first Q amplifier stage **652** and a second Q amplifier stage **656**. Only the state of the switches for the baseband filter **625** will be described because the active and passive elements of the filter **625** are identical to the active and passive elements of the baseband filter **400** described in FIG. **4**. Reference numerals for the passive resistances and capacitances have been omitted for ease of illustration. In an exemplary embodiment, the baseband filter **625** can be configured as a real filter having real and/or complex poles. In a situation where interfering signals (also referred to as "jammers") located between the carriers CA**1** and CA**2** are relatively small, in that the interfering signal is at an amplitude, or power, lower than the amplitude, or power, of the non-contiguous carriers CA**1** and CA**2**, but an interfering signal located outside of the band in which the carriers CA**1** and CA**2** are located is higher in amplitude, or power, than the carriers, CA**1** and CA**2**, the first and second modes described above can be activated to create a real low pass filter with real and/or complex poles. Complex filtering is particularly desirable when interfering signals are higher in amplitude than the carriers CA**1** and CA**2** and when the interfering signals are located outside of the frequency band in which the carriers are located. When the switches **608**, **609**, **618**, **619**, **658**, **659**, **668** and **669** associated with the first mode are conductive; and when the switches **636** and **686** associated with the second mode are conductive (and the switches **642**, **644**, **647** and **648** associated with the third mode are non-conductive), a real filter with real and/or complex poles can be constructed.

In this exemplary embodiment, a single LO frequency can be used to downconvert the two non-contiguous carriers CA**1** and CA**2**. A single LNA **602** and mixer **604** are used because the interfering signals located between the non-contiguous carriers CA**1** and CA**2** are relatively small. A single LO (generating a single fLO) located at a frequency that is substantially halfway between the respective frequencies the two carriers CA**1** (fCA**1**) and CA**2** (fCA**2**) can be used to downconvert both carriers, one to a positive frequency and the other to a negative frequency. The low pass filter outputs are taken from the output of the second I amplifier stage **606** on connection **635** and from the output of the second Q amplifier stage **656** on connection **675**. In this exemplary embodiment, complex filtering is not needed in the analog domain due to the presence of a small interfering signal between the carriers CA**1** and CA**2**, but complex poles are desired to create a sharp filter response to eliminate a large interfering signal located outside of the band or bands in which the carriers CA**1** and CA**2** are located, thus allowing the carriers to be extracted in the digital domain.

FIG. **7** is a schematic diagram illustrating an exemplary embodiment of a reconfigurable baseband filter that can be used in an intra-band carrier aggregation receiver to filter a received signal using a single local oscillator (LO) path, in which a single LNA provides the receive signal as two separate outputs to two separate receive chains. The receiver **700** comprises a low noise amplifier (LNA) **702** configured to receive two non-contiguous carriers CA**1** and CA**2**, and provide the carriers CA**1** and CA**2** as separate outputs via LNA portions **703***a* and **703***b* to a first mixer **704***a* and a second mixer **704***b*. The first mixer **704***a* comprises an in-phase (I) mixer **705***a* and a quadrature (Q) mixer **705***b*. The second mixer **704***b* comprises an in-phase (I) mixer **707***a* and a quadrature (Q) mixer **707***b*. The mixers **704***a* and **704***b* receive a single local oscillator (LO) signal generated by a receive LO signal generator (referred to as a voltage controlled oscillator (VCO) **710**. The VCO **710** includes a phase locked loop (PLL) (not shown for simplicity).

The receiver **700** comprises two baseband filters, a first baseband filter **725** configured to process the I and Q components of the carrier CA**1** and a second baseband filter **735** configured to process the I and Q components of the carrier CA**2**. The baseband filter **725** comprises a first I amplifier stage **702**, a second I amplifier stage **706**, a first Q amplifier stage **752** and a second Q amplifier stage **756**. The baseband filter **735** comprises a first Q amplifier stage **762**, a second Q amplifier stage **766**, a first I amplifier stage **772** and a second I amplifier stage **776**. Reference numerals for the passive resistances and capacitances have been omitted for ease of illustration. In an exemplary embodiment, the baseband filters **725** and **735** can be configured as a complex bandpass filter where the carriers CA**1** and CA**2** are divided by the LNA **702** and processed by two downconversion paths. Complex filtering is used to extract the information from the two carriers. For example, the first baseband filter **725** can extract the carrier CA**1** to a positive frequency and the second baseband filter **735** can extract the carrier CA**2** to a negative frequency. This positive and negative frequency processing can be achieved by swapping the filter's I and Q connection in the two baseband filters **725** and **735** (I/Q and Q/I filter feedback illustrated by the I output being directed to the Q input and the Q output being directed to the I input of the baseband filter **725** through switches **742**, **744**, **747** and **748** and the Q output being directed to the I input and the I output being directed to the Q input of the baseband filter **735** through switches **731**, **733**, **734** and **737**). The positive and negative frequency extraction can also be performed in the LO path by swapping the I and Q connections in one of the quadrature mixers **704***a* or **704***b*.

When the switches **742**, **744**, **747** and **748** of the first bandpass filter **725** and the switches **731**, **733**, **734** and **737** of the second bandpass filter **735** associated with the third mode of operation are conductive, (together with the switches **708**, **709**, **718**, **719**, **758**, **759**, **768** and **769** of the first bandpass filter **725** and the switches **711**, **713**, **716**, **717**, **721**, **723**, **726** and **727** of the second bandpass filter **735** associated with the

first mode being conductive and with the switches **736** and **786** of the first bandpass filter **725** and the switches **728** and **729** of the second bandpass filter **735** associated with the second mode being non-conductive, a complex bandpass filter can be constructed. In an exemplary embodiment, the bandpass filter outputs of the baseband filter **725** are taken from the output of the first I amplifier stage **702** on connection **767** and from the output of the first Q amplifier stage **752** on connection **777**. The bandpass filter outputs of the baseband filter **735** are taken from the output of the first Q amplifier stage **762** on connection **787** and from the output of the first I amplifier stage **772** on connection **789**.

Such a complex bandpass filter offers filtering of positive or negative frequencies (depending on the I/Q arrangement) with modest image rejection and is useful in situations in which the amplitude, or power, of the interfering signal between the carriers is significant, in that it may be higher than an amplitude, or power, of the first carrier CA**1** or the second carrier CA**2**, and in which one of the carriers, CA**1** or CA**2**, may be higher in amplitude, or power, than the other carrier. If one of the carriers CA**1** or CA**2** is higher in amplitude, or power, than the other, an image of the higher power carrier may corrupt the lower power carrier. In such an instance, increased image rejection is provided by the complex filters **725** and **735**. A dual receive path, each having a mixer and PLL, with a single LO/VCO can be used to downconvert the two non-contiguous carriers with a single LO (fLO). In this exemplary embodiment, the two carriers are divided in the LNA **702** and are distributed to two downconverting paths comprising the two quadrature mixers **704***a* and **704***b* and the two baseband filters **725** and **735**.

A single LO (fLO) located at a frequency that is substantially halfway between the frequencies of the two carriers CA**1** (fCA**1**) and CA**2** (fCA**2**) can be used to downconvert both carriers, one to a positive frequency and the other to a negative frequency. In this exemplary embodiment, the filters **725** and **735** form a complex filter that is used to extract both carriers. In an exemplary embodiment, the first bandpass filter **725** can extract the first non-contiguous carrier CA**1** and downconvert it to a positive frequency and the second bandpass filter **735** can extract the second non-contiguous carrier CA**2** and downconvert it to a negative frequency.

The filters **725** and **735** provide positive and negative complex filtering, which is achieved by swapping the filter's I/Q connection in the two filters (I/Q vs. Q/I filter feedback) by operation of the switches **742**, **744**, **747**, **748** and the switches **731**, **733**, **734** and **737**. Although shown in FIG. **7** as the carrier CA**1** being processed by the baseband filter **725** and the carrier CA**2** being processed by the baseband filter **735**, it is possible to swap the carriers CA**1** and CA**2** so that they are processed by the other baseband filter. Further, it is possible to delay the I or the Q signals through either of the baseband filter **725** or the baseband filter **735** to interchange the carriers CA**1** and CA**2** with respect to which is converted to a positive frequency and which is converted to a negative frequency.

FIG. **8** is a schematic diagram illustrating another exemplary embodiment of a reconfigurable receiver and baseband filter configured as a bandpass filter that can be used in an intra-band carrier aggregation receiver to filter a received signal using a single local oscillator (LO) path, in which a single receive chain processes the receive signal.

The receiver **800** comprises a low noise amplifier (LNA) **802** configured to receive two non-contiguous carriers CA**1** and CA**2**, and provide the non-contiguous carriers CA**1** and CA**2** to a mixer **804**. The mixer **804** comprises an in-phase (I) mixer **805***a* and a quadrature (Q) mixer **805***b*. The mixer **804** receives a single local oscillator (LO) signal generated by a receive LO signal generator (referred to as a voltage controlled oscillator (VCO) **810**. The VCO **810** includes a phase locked loop (PLL) (not shown for simplicity). The baseband filter **825** comprises a first I amplifier stage **802**, a second I amplifier stage **806**, a first Q amplifier stage **852** and a second Q amplifier stage **856**.

The baseband filter **825** is configured such that bandpass outputs are taken from the output of the first I amplifier stage **802** on connection **827** and the output of the first Q amplifier stage **852** on connection **877**. Reference numerals for the passive resistances and capacitances have been omitted for ease of illustration. The baseband filter **825** can be configured as a real filter having real and/or complex poles. In a situation where interfering signals (also referred to as "jammers") between carriers are significant, in that they may have an amplitude, or power, that is higher than an amplitude, or power of the first carrier CA**1** or the second carrier CA**2**, and in which the relative power of the carriers CA**1** and CA**2** is similar, the first and second modes described above can be activated to create a real bandpass filter. When the switches **808**, **809**, **818**, **819**, **858**, **859**, **868** and **869** associated with the first mode are conductive; and when the switches **836** and **886** associated with the second mode are conductive (and the switches **842**, **844**, **847** and **848** associated with the third mode are non-conductive), a real filter with real poles can be constructed.

In this exemplary embodiment, a single LO frequency can be used to downconvert the two non-contiguous carriers (CA**1** and CA**2**). A single LO (generating a single fLO) located at a frequency that is substantially halfway between the respective frequencies the two carriers CA**1** (fCA**1**) and CA**2** (fCA**2**) can be used to downconvert both carriers, one to a positive frequency and the other to a negative frequency. In this exemplary embodiment, a bandpass filter allows the carriers CA**1** and CA**2** to be downconverted even if a relatively large interfering signal is located between the carriers CA**1** and CA**2**.

To create a bandpass filter, it is desirable to have access to the I and Q signals at the output of the first I amplifier stage **802** and first Q amplifier stage **852**. The output of the first I amplifier stage **802** on connection **827** and the first Q amplifier stage **852** on connection **877** is the real bandpass output of the baseband filter **825**.

FIG. **9** is a flow chart **900** describing the operation of an exemplary embodiment of a reconfigurable carrier-aggregation receiver and filter that can be used to process non-contiguous carriers. The blocks in the flow chart **900** can be performed in or out of the order shown, and in some embodiments, can be performed at least in part in parallel.

In block **902**, a receiver having a reconfigurable baseband filter is configured to receive first and second carriers. In an exemplary embodiment, the first and second carriers can have non-contiguous frequencies.

In block **904**, the first and second carriers are processed by the receiver and reconfigurable baseband filter to extract respective first and second carrier frequencies.

In block **906**, at least one of a low pass filter output and a bandpass filter output are generated using the extracted respective first and second carrier frequencies.

The reconfigurable receiver and filter circuit described herein may be implemented on one or more ICs, analog ICs, RFICs, mixed-signal ICs, ASICs, printed circuit boards (PCBs), electronic devices, etc. The reconfigurable receiver and filter circuit may also be fabricated with various IC process technologies such as complementary metal oxide semiconductor (CMOS), N-channel MOS (NMOS), P-channel MOS (PMOS), bipolar junction transistor (BJT), bipolar-

CMOS (BiCMOS), silicon germanium (SiGe), gallium arsenide (GaAs), heterojunction bipolar transistors (HBTs), high electron mobility transistors (HEMTs), silicon-on-insulator (SOI), etc.

An apparatus implementing the receiver and filter circuit described herein may be a stand-alone device or may be part of a larger device. A device may be (i) a stand-alone IC, (ii) a set of one or more ICs that may include memory ICs for storing data and/or instructions, (iii) an RFIC such as an RF receiver (RFR) or an RF transmitter/receiver (RTR), (iv) an ASIC such as a mobile station modem (MSM), (v) a module that may be embedded within other devices, (vi) a receiver, cellular phone, wireless device, handset, or mobile unit, (vii) etc.

In one or more exemplary designs, the functions described may be implemented in hardware, software, firmware, or any combination thereof. If implemented in software, the functions may be stored on or transmitted over as one or more instructions or code on a computer-readable medium. Computer-readable media includes both computer storage media and communication media including any medium that facilitates transfer of a computer program from one place to another. A storage media may be any available media that can be accessed by a computer. By way of example, and not limitation, such computer-readable media can comprise RAM, ROM, EEPROM, CD-ROM or other optical disk storage, magnetic disk storage or other magnetic storage devices, or any other medium that can be used to carry or store desired program code in the form of instructions or data structures and that can be accessed by a computer. Also, any connection is properly termed a computer-readable medium. For example, if the software is transmitted from a website, server, or other remote source using a coaxial cable, fiber optic cable, twisted pair, digital subscriber line (DSL), or wireless technologies such as infrared, radio, and microwave, then the coaxial cable, fiber optic cable, twisted pair, DSL, or wireless technologies such as infrared, radio, and microwave are included in the definition of medium. Disk and disc, as used herein, includes compact disc (CD), laser disc, optical disc, digital versatile disc (DVD), floppy disk and blu-ray disc where disks usually reproduce data magnetically, while discs reproduce data optically with lasers. Combinations of the above should also be included within the scope of computer-readable media.

As used in this description, the terms "component," "database," "module," "system," and the like are intended to refer to a computer-related entity, either hardware, firmware, a combination of hardware and software, software, or software in execution. For example, a component may be, but is not limited to being, a process running on a processor, a processor, an object, an executable, a thread of execution, a program, and/or a computer. By way of illustration, both an application running on a computing device and the computing device may be a component. One or more components may reside within a process and/or thread of execution, and a component may be localized on one computer and/or distributed between two or more computers. In addition, these components may execute from various computer readable media having various data structures stored thereon. The components may communicate by way of local and/or remote processes such as in accordance with a signal having one or more data packets (e.g., data from one component interacting with another component in a local system, distributed system, and/or across a network such as the Internet with other systems by way of the signal).

Although selected aspects have been illustrated and described in detail, it will be understood that various substitutions and alterations may be made therein without departing from the spirit and scope of the present invention, as defined by the following claims.

What is claimed is:

1. A device, comprising:

a reconfigurable baseband filter configured to receive a communication signal having a first carrier and a second carrier, the reconfigurable baseband filter having a first filter portion and a second filter portion, the first filter portion and the second filter portion each comprising respective first and second amplification stages; and

a plurality of switches associated with the first filter portion and the second filter portion, the plurality of switches for configuring the reconfigurable baseband filter into a plurality of sub-filters, each configured to generate at least one of a low pass filter output and a bandpass filter output.

2. The device of claim **1**, wherein the reconfigurable baseband filter is configured as a real filter and is configured to provide switchable resistive/capacitive (RC) feedback to at least the first amplification stages.

3. The device of claim **1**, wherein the reconfigurable baseband filter is configured as a real filter having real poles and complex poles and is configured to provide switchable resistive/capacitive (RC) feedback to the first and second amplification stages, and is configured to provide switchable resistive (R) feedback to a combination of the first and second amplification stages.

4. The device of claim **1**, wherein the reconfigurable baseband filter is configured as a complex bandpass filter and is configured to provide switchable resistive/capacitive (RC) feedback to the first and second amplification stages, the reconfigurable baseband filter configured to filter both positive and negative frequencies.

5. The device of claim **1**, wherein the reconfigurable baseband filter comprises a real bandpass filter and is configured to provide switchable resistive/capacitive (RC) feedback to the first and second amplification stages, and is configured to provide switchable resistive (R) feedback to a combination of the first and second amplification stages.

6. The device of claim **4**, wherein the first carrier and the second carrier are processed by two instances of the reconfigurable baseband filter, a first reconfigurable baseband filter processes the first carrier and a second reconfigurable baseband filter processes the second carrier.

7. The device of claim **1**, further comprising a single local oscillator (LO) for downconverting the first carrier and the second carrier, the single local oscillator (LO) signal having a frequency that is substantially halfway between a frequency of the first carrier and a frequency of the second carrier.

8. A method comprising:

receiving a communication signal having a first carrier and a second carrier;

processing the first and second carriers to extract first and second carrier frequencies;

generating at least one of a low pass filter output and a bandpass filter output using the extracted first and second carrier frequencies; and

processing the communication signal and an interfering signal having an amplitude lower than an amplitude of the first carrier and the second carrier.

9. The method of claim **8**, further comprising:

processing the communication signal and a first interfering signal located between the first carrier and the second carrier and having an amplitude lower than an amplitude of any of the first carrier and the second carrier; and

processing the communication signal and a second interfering signal located outside of a band having the first carrier and the second carrier and having an amplitude higher than an amplitude of the first carrier and the second carrier.

10. The method of claim **8**, further comprising processing the communication signal and an interfering signal located between the first carrier and the second carrier and having an amplitude higher than an amplitude of any of the first carrier and the second carrier, the first carrier having an amplitude different than an amplitude of the second carrier.

11. The method of claim **10**, further comprising separately processing the first carrier and the second carrier.

12. The method of claim **8**, further comprising processing the communication signal and an interfering signal located between the first carrier and the second carrier and having an amplitude higher than an amplitude of any of the first carrier and the second carrier, the first carrier having an amplitude substantially similar to an amplitude of the second carrier.

13. The method of claim **8**, further comprising downconverting the first carrier and the second carrier using a single local oscillator (LO), the single local oscillator (LO) signal having a frequency that is substantially halfway between a frequency of the first carrier and a frequency of the second carrier.

14. A device, comprising:

means for receiving a communication signal having a first carrier and a second carrier;

means for processing the first and second carriers to extract first and second carrier frequencies;

means for generating at least one of a low pass filter output and a bandpass filter output using the extracted first and second carrier frequencies; and

means for processing the communication signal and an interfering signal having an amplitude lower than an amplitude of the first carrier and the second carrier.

15. The device of claim **14**, further comprising:

means for processing the communication signal and a first interfering signal located between the first carrier and the second carrier and having an amplitude lower than an amplitude of any of the first carrier and the second carrier; and

means for processing the communication signal and a second interfering signal located outside of a band having the first carrier and the second carrier and having an amplitude higher than an amplitude of the first carrier and the second carrier.

16. The device of claim **14**, further comprising means for processing the communication signal and an interfering signal located between the first carrier and the second carrier and having an amplitude higher than an amplitude of any of the first carrier and the second carrier, the first carrier having an amplitude different than an amplitude of the second carrier.

17. The device of claim **14**, further comprising means for processing the communication signal and an interfering signal located between the first carrier and the second carrier and having an amplitude higher than an amplitude of any of the first carrier and the second carrier, the first carrier having an amplitude substantially similar to an amplitude of the second carrier.

18. The device of claim **14**, further comprising means for downconverting the first carrier and the second carrier using a single local oscillator (LO), the single local oscillator (LO) signal having a frequency that is substantially halfway between a frequency of the first carrier and a frequency of the second carrier.

* * * * *