US009217435B2

(12) **United States Patent**
Moore et al.

(10) **Patent No.: US 9,217,435 B2**
(45) **Date of Patent: Dec. 22, 2015**

(54) **AXIAL FLOW PUMP WITH INTEGRATED MOTOR**

(71) Applicant: **Nidec Motor Corporation**, St. Louis, MO (US)

(72) Inventors: **William D. Moore**, Florissant, MO (US); **Jason A. Richter**, Glen Carbon, IL (US); **Joshua M. Biro**, Wood River, IL (US)

(73) Assignee: **Nidec Motor Corporation**, St. Louis, MO (US)

(*) Notice: Subject to any disclaimer, the term of this patent is extended or adjusted under 35 U.S.C. 154(b) by 269 days.

(21) Appl. No.: **13/658,715**

(22) Filed: **Oct. 23, 2012**

(65) **Prior Publication Data**

US 2014/0112808 A1 Apr. 24, 2014

(51) **Int. Cl.**
F04D 13/06 (2006.01)
F04D 3/00 (2006.01)

(52) **U.S. Cl.**
CPC ***F04D 3/00*** (2013.01); ***F04D 13/0606*** (2013.01)

(58) **Field of Classification Search**
CPC F04D 13/06; F04D 3/005; F04D 3/00; F04D 13/0606; F04D 3/02
USPC 417/355–356
See application file for complete search history.

(56) **References Cited**

U.S. PATENT DOCUMENTS

3,143,972 A 8/1964 Smith et.al.
4,831,297 A 5/1989 Taylor et al.
5,075,606 A 12/1991 Lipman
5,185,545 A 2/1993 Veronesi et al.
5,205,721 A 4/1993 Isaacson
5,209,650 A * 5/1993 Lemieux F01D 15/10 384/115
5,211,546 A 5/1993 Isaacson et al.
5,252,875 A 10/1993 Veronesi et al.
5,289,068 A 2/1994 Veronesi et al.
5,490,768 A 2/1996 Veronesi et al.
5,494,413 A * 2/1996 Campen et al. 417/356
5,527,159 A 6/1996 Bozeman, Jr. et al.
5,692,882 A 12/1997 Bozeman, Jr. et al.
6,053,705 A 4/2000 Schob et al.
6,250,880 B1 6/2001 Woodard et al.
6,254,359 B1 * 7/2001 Aber 417/356
6,368,075 B1 4/2002 Fremerey
6,595,743 B1 * 7/2003 Kazatchkov F04D 3/00 415/170.1
6,638,011 B2 10/2003 Woodard et al.
6,813,328 B2 11/2004 Kitch et al.
6,966,748 B2 11/2005 Woodard et al.
7,226,277 B2 6/2007 Dooley
7,235,894 B2 6/2007 Roos
7,385,303 B2 6/2008 Roos
7,438,538 B2 10/2008 Dooley
7,476,077 B2 1/2009 Woodard et al.
7,502,648 B2 3/2009 Okubo et al.
7,568,896 B2 8/2009 Dooley
7,794,214 B2 9/2010 Dooley
8,002,518 B2 8/2011 Woodard et al.
8,007,254 B2 8/2011 LaRose et al.
8,157,539 B2 4/2012 Hidaka et al.
2004/0203298 A1 10/2004 Chaix
2005/0025630 A1 2/2005 Ayre et al.

(Continued)

Primary Examiner — Charles Freay
Assistant Examiner — Philip Stimpert
(74) *Attorney, Agent, or Firm* — Hovey Williams LLP

(57) **ABSTRACT**

An appliance containing a motorized appliance pump is provided. The appliance pump includes an integrated motor. The pump is an axial flow pump operable to move fluid along a fluid passageway.

29 Claims, 9 Drawing Sheets

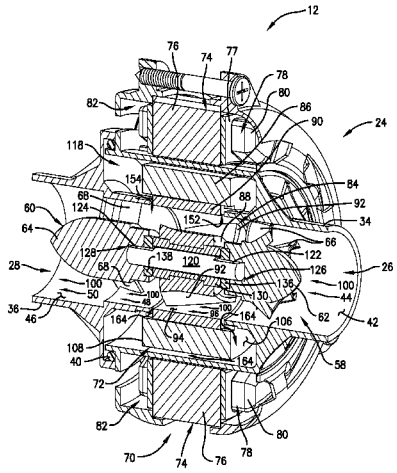

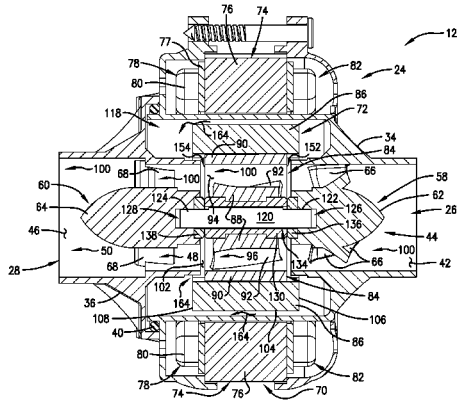

(56) **References Cited**

U.S. PATENT DOCUMENTS

2005/0196293	A1	9/2005	Ayre et al.
2007/0086902	A1	4/2007	Dooley
2010/0069847	A1	3/2010	LaRose et al.
2010/0185280	A1	7/2010	Ayre et al.
2011/0301403	A1	12/2011	LaRose et al.
2012/0016178	A1	1/2012	Woodard et al.

* cited by examiner

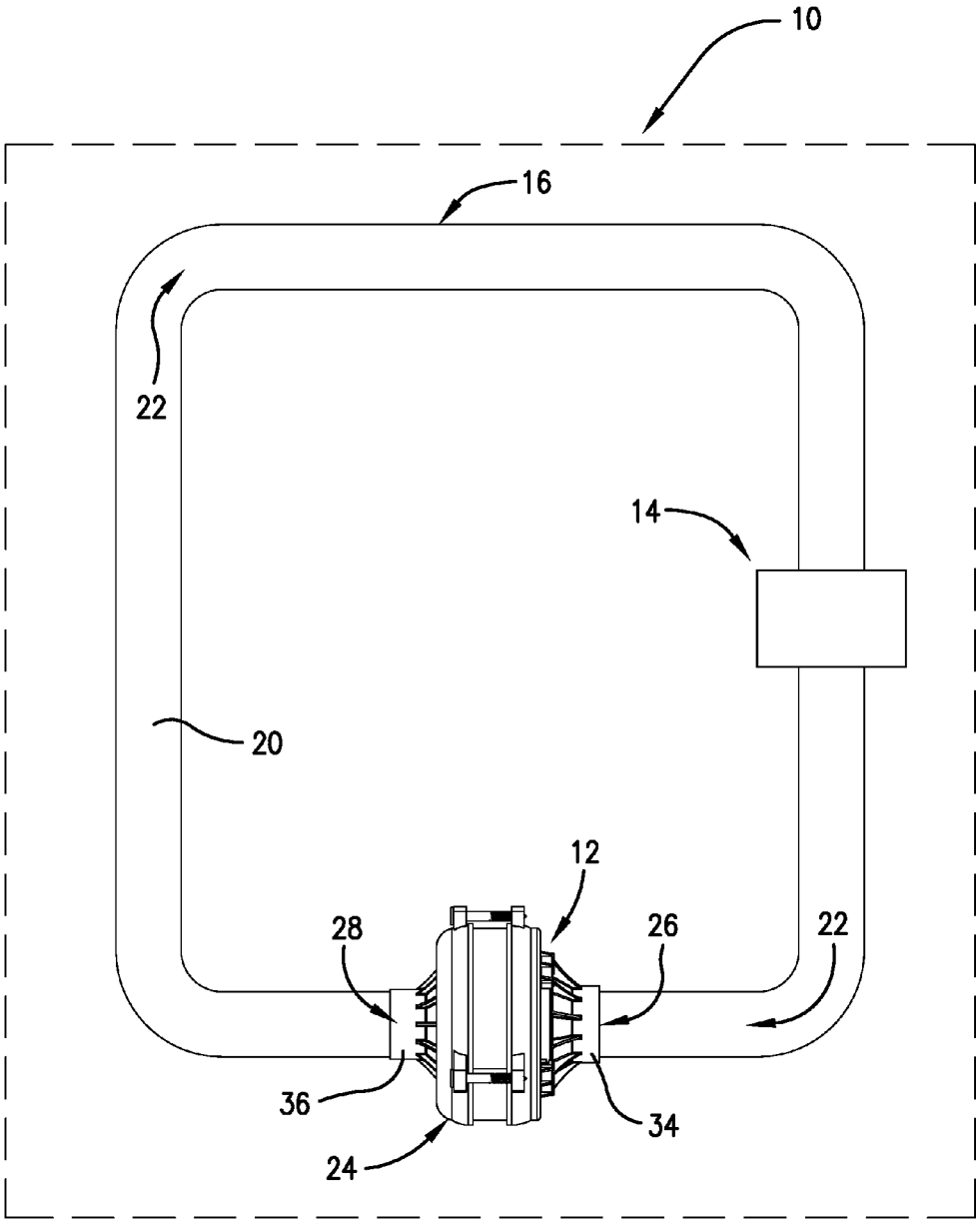

Fig. 1.

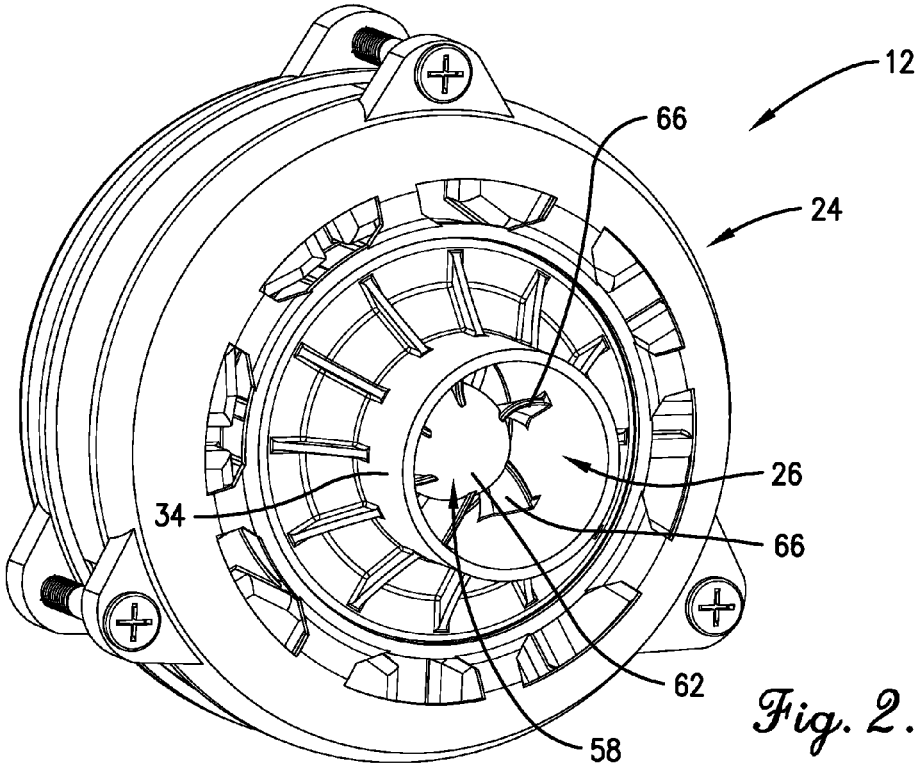

Fig. 2.

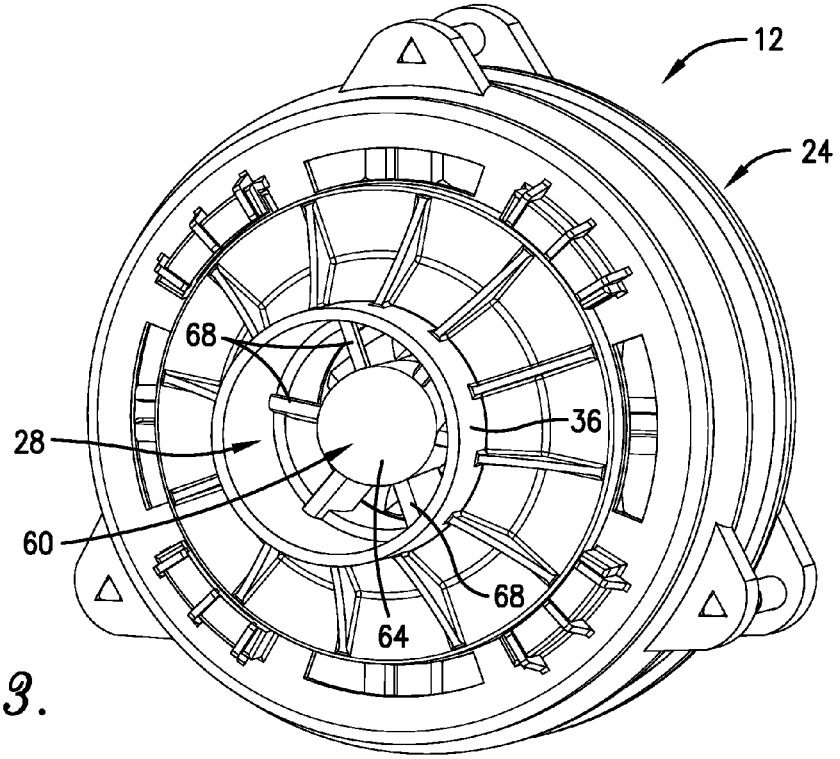

Fig. 3.

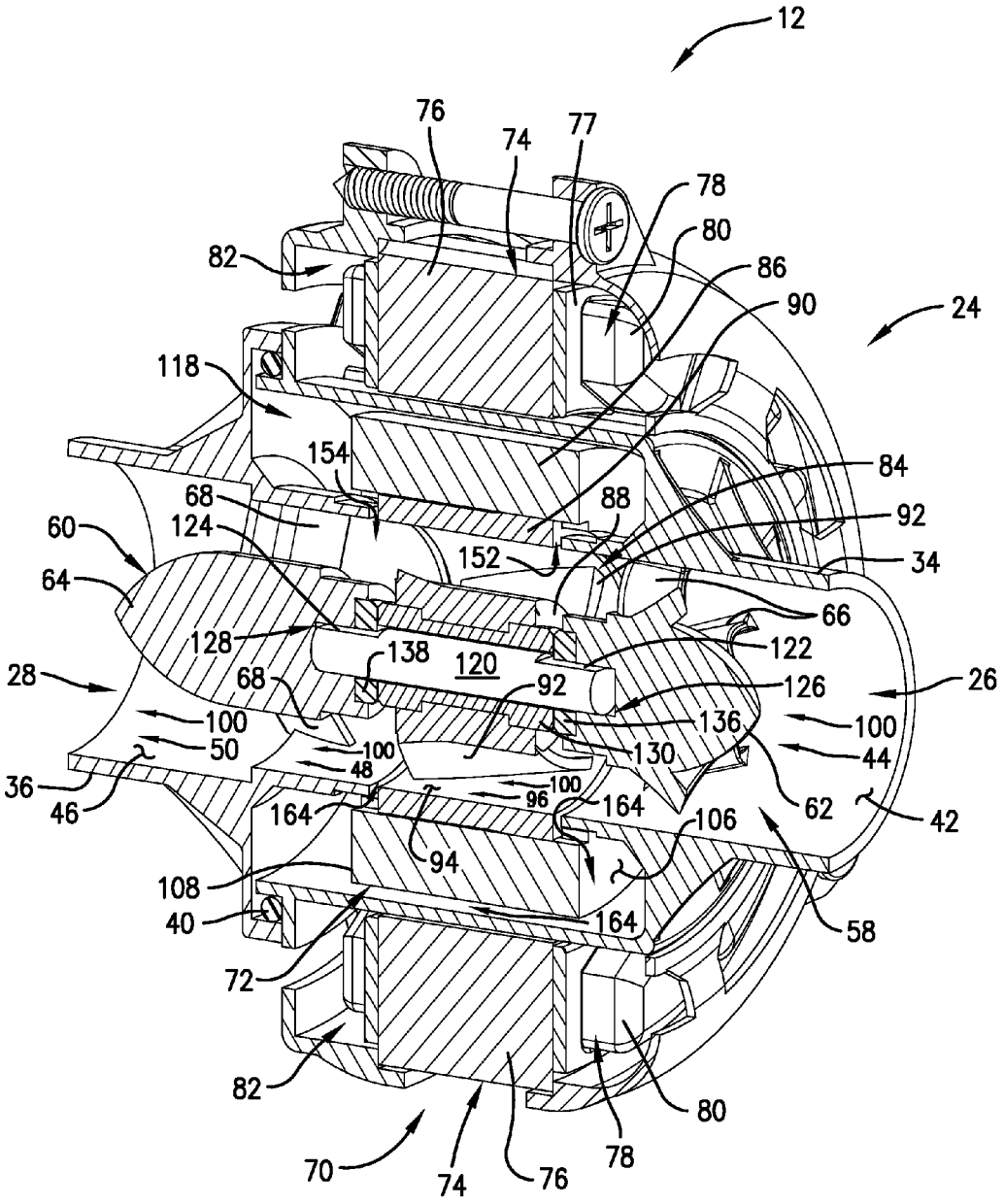
12
76
74
77
78
80
86
90
24
82
118
154
84
68
88
92
60
124
152
34
64
66
128
122
138
120
28
68
92
126
26
100
136
100
50
100
130
44
48
36
100
96
164
62
42
46
164
106
94
108
164
40
58
72
82
80
70
74
76
78

Fig. 4.

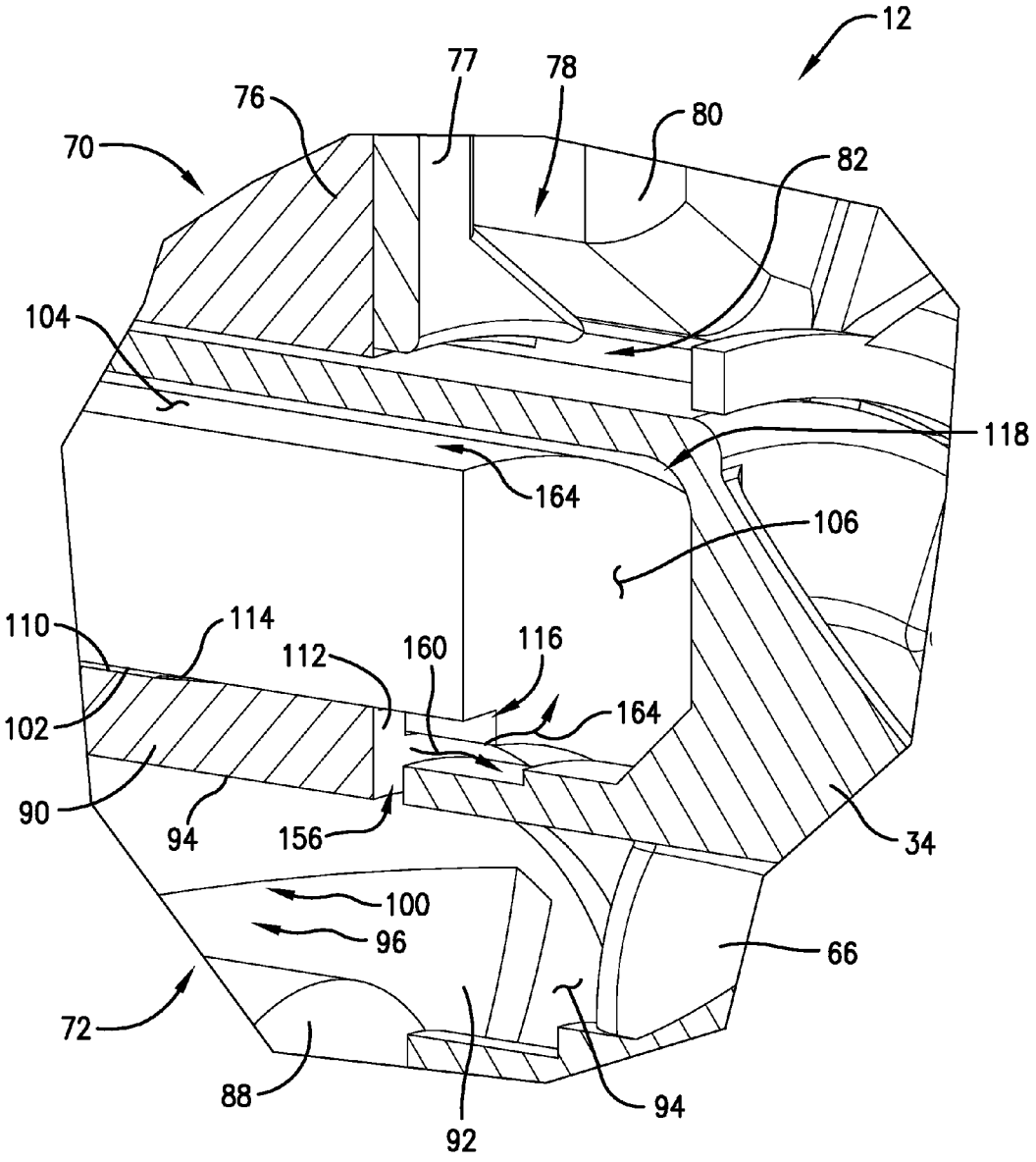
12
77
78
76
80
70
82
104
118
164
106
110
114
112
160
116
102
164
90
94
156
34
100
96
66
72
88
94
92

Fig. 4a.

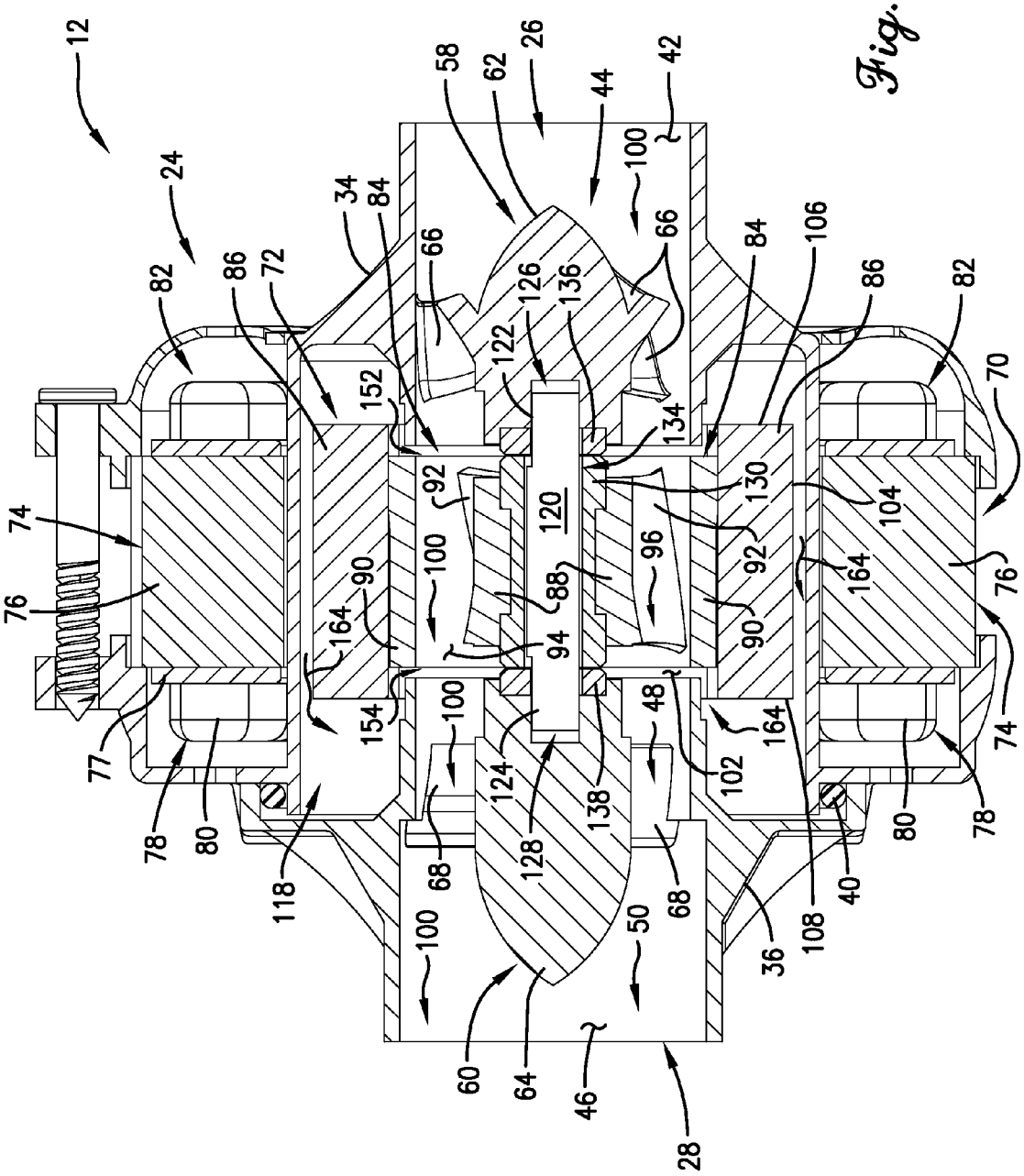
12
24
26
28
34
36
40
42
44
46
48
50
58
60
62
64
66
68
70
72
74
76
77
78
80
82
84
86
88
90
92
94
96
100
102
104
106
108
118
120
122
124
126
128
130
134
136
138
152
154
164

Fig. 5.

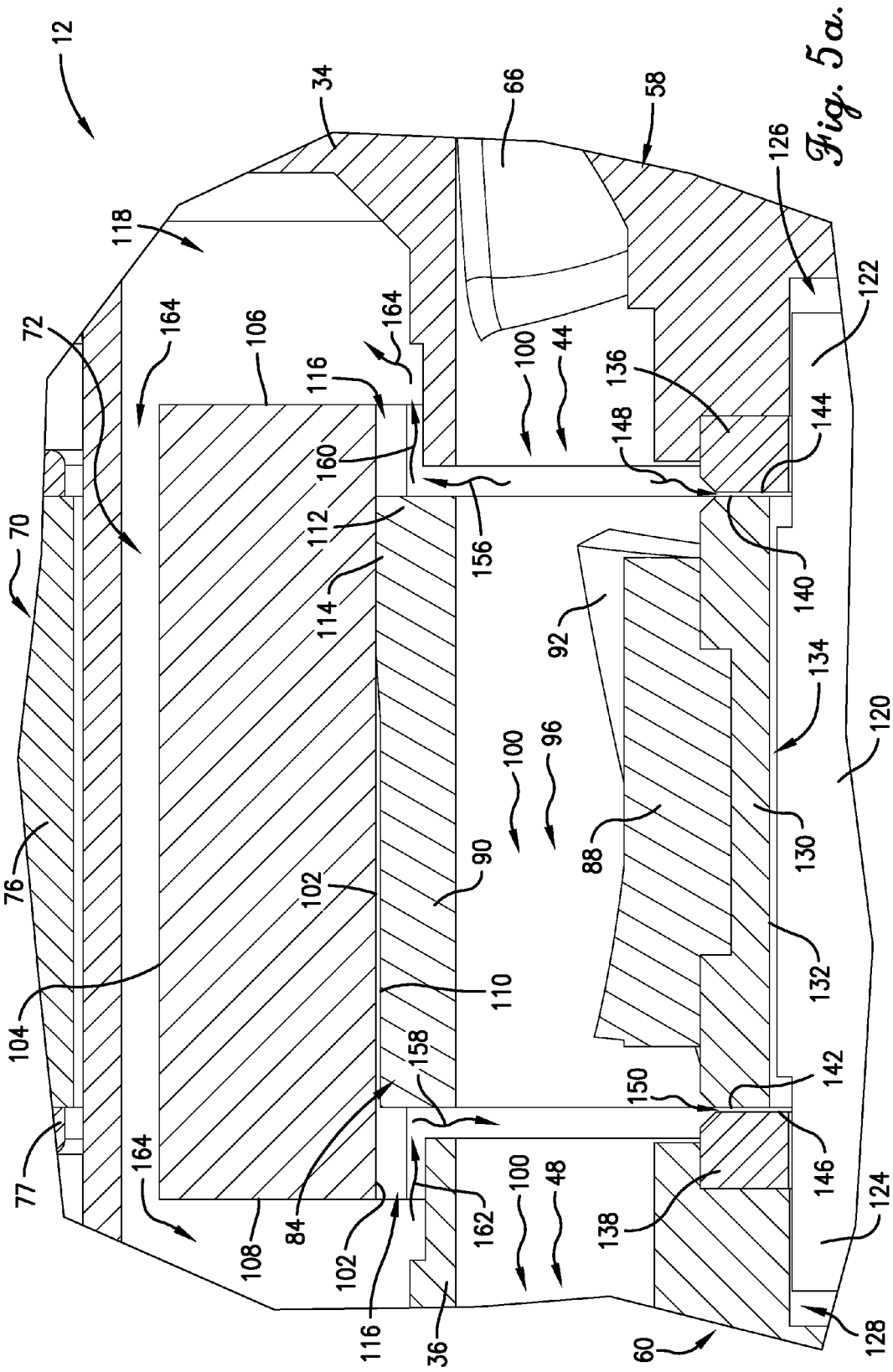
12
34
66
58
126
118
122
72
164
106
116
164
100
44
136
144
148
160
156
112
70
114
140
92
134
120
100
96
88
130
76
102
90
132
104
110
158
150
142
77
164
84
162
100
48
146
124
108
102
116
36
138
60
128

Fig. 5a.

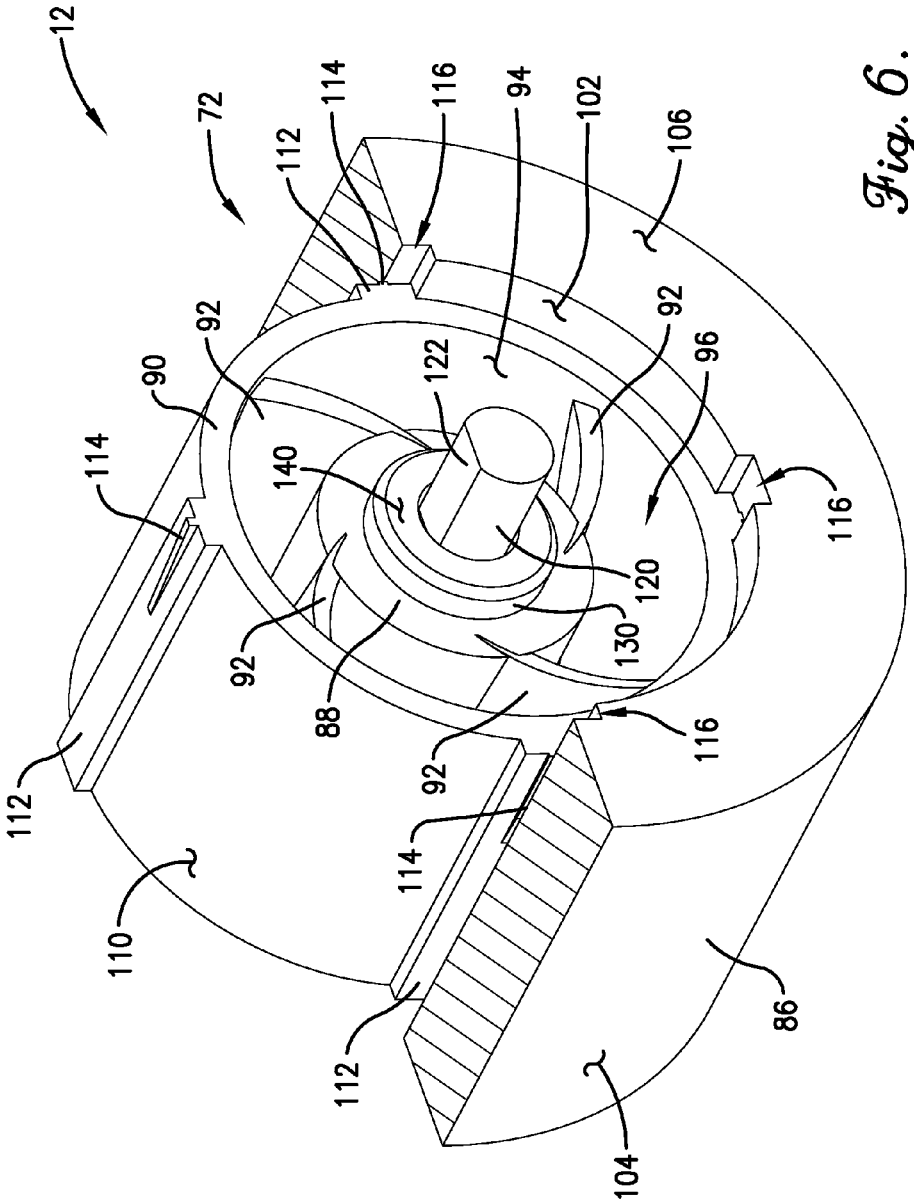

Fig. 6.

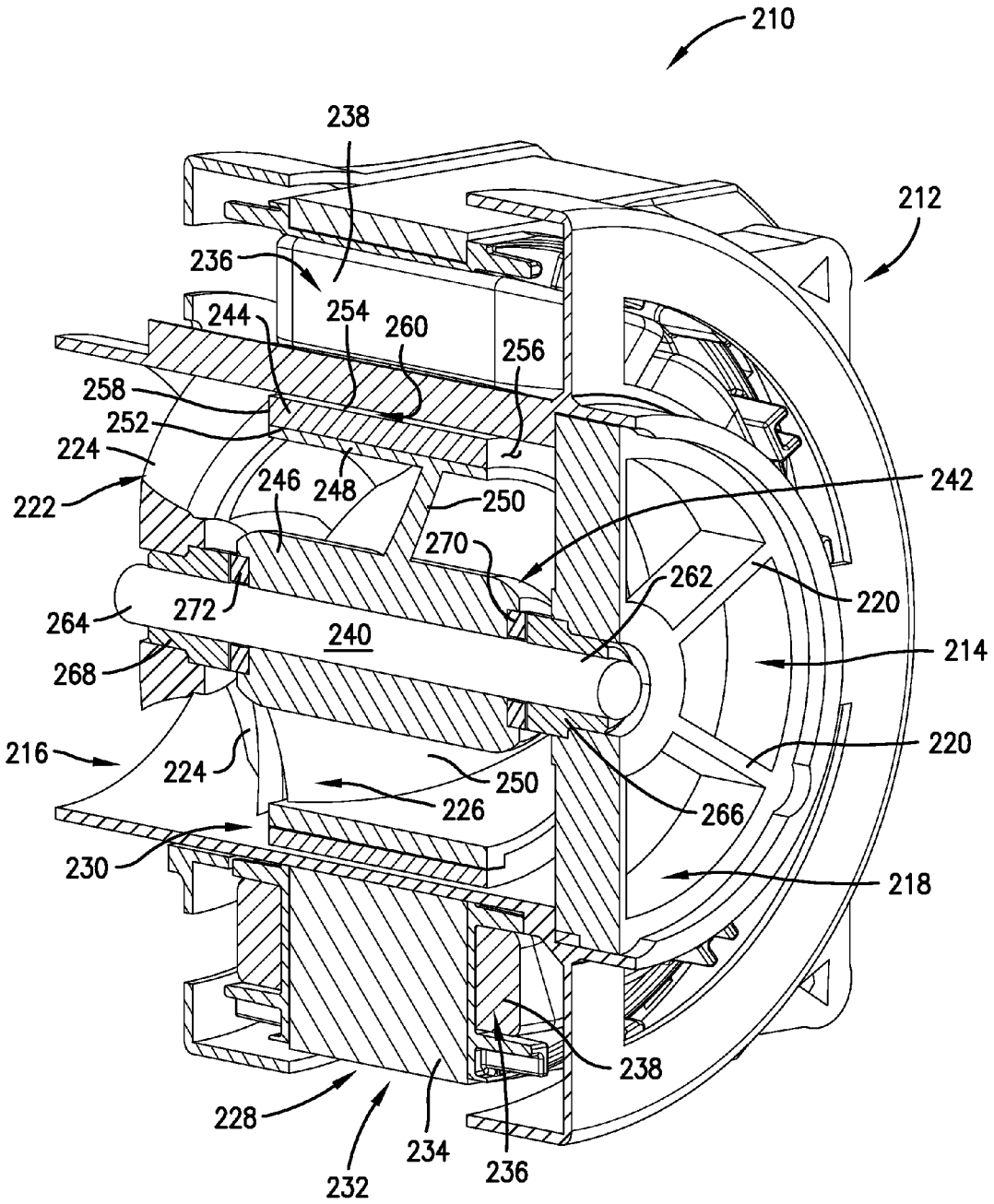
210
238
212
236
244
254
260
256
258
252
224
222
246
248
250
242
270
262
220
264
272
240
214
268
216
224
250
226
266
220
230
218
238
228
234
236
232

Fig. 7.

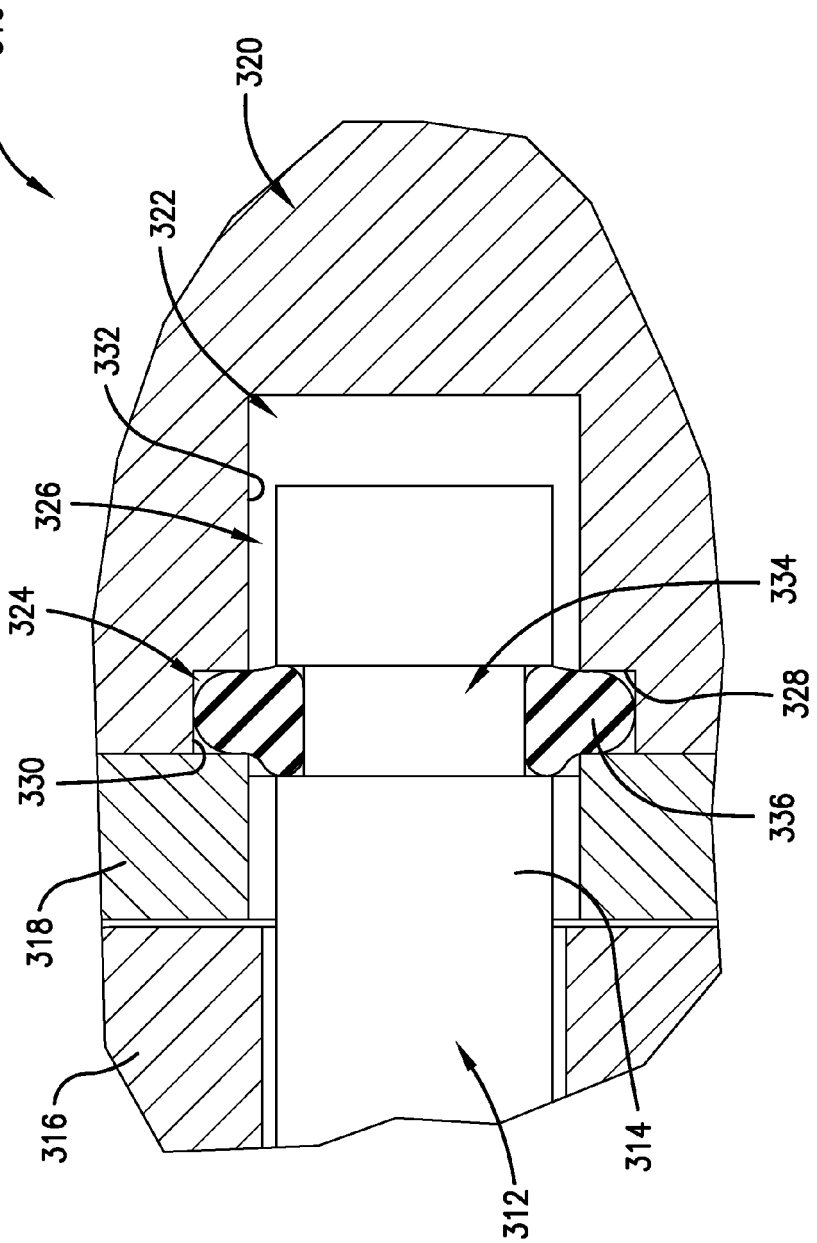

Fig. 8.

AXIAL FLOW PUMP WITH INTEGRATED MOTOR

BACKGROUND OF THE INVENTION

1. Field of the Invention

The present invention relates generally to appliances, such as dishwashers, and motorized appliance pumps. More specifically, the present invention concerns an appliance pump having an integrated motor.

2. Discussion of the Prior Art

Those of ordinary skill in the art will appreciate that pumps are often used in home appliances such as dishwashers and water heaters. In many instances, the pumps are driven by electric motors. Pumps used in such appliances are commonly of a centrifugal type. In such pumps, a fluid flows through an inlet line into a housing containing a rotating impeller. The impeller directs the fluid through an outlet line oriented perpendicularly to the inlet line. That is, a change in flow direction is required. Among other things, such a change leads to decreased hydraulic efficiency. Furthermore, the form of the housing of such a pump may require dedication of a detrimentally large space within the machine.

SUMMARY

According to one aspect of the present invention, an appliance comprises a fluid line presenting a fluid passageway, a mechanism coupled to the line so as to be operable to act on fluid within the passageway, and an axial flow pump operable to move fluid along the passageway. The pump includes a housing coupled to the fluid line, a motor including a rotor and a stator, and a pair of bearing systems. The housing at least in part defines a primary flow path therethrough that is fluidly connected to the passageway. The rotor includes a magnet, an elongated rotatable shaft that presents opposite ends, and an impeller fixed to the shaft for rotational movement therewith. The impeller includes a substantially annular rim that is spaced radially from the shaft and supports the magnet. The impeller further includes a blade disposed in the primary flow path. The pair of bearing systems rotatably supports the shaft on the housing, with each of the bearing systems being located adjacent a respective end of the shaft.

According to another aspect of the present invention, an appliance comprises a fluid line presenting a fluid passageway, a mechanism coupled to the line so as to be operable to act on fluid within the passageway, and an axial flow pump operable to move fluid along the passageway. The pump includes a housing coupled to the fluid line, a motor including a rotor and a stator, and a stationary bearing surface facing a generally axial direction. The housing at least in part defines a primary flow path therethrough that is fluidly connected to the passageway. The rotor includes a magnet, a stationary shaft, a sleeve bearing rotatably supported on the shaft, and an impeller fixed to the sleeve bearing for rotational movement therewith. The sleeve bearing includes a radial bearing face engaging the shaft so as to permit rotational movement of the sleeve bearing relative to the shaft. The impeller includes a substantially annular rim that is spaced radially from the sleeve bearing and supports the magnet. The impeller further includes a blade disposed in the primary flow path. The sleeve bearing includes an axial bearing face engaging the stationary bearing surface so as to permit rotational movement of the sleeve bearing relative to the stationary bearing surface while restricting relative axial movement of the sleeve bearing.

According to another aspect of the present invention, an appliance comprises a fluid line presenting a fluid passageway, a mechanism coupled to the line so as to be operable to act on fluid within the passageway, and an axial flow pump operable to move fluid along the passageway. The pump includes a housing coupled to the fluid line and a motor including a rotor and a stator. The housing at least in part defines a primary flow path therethrough that is fluidly connected to the passageway. The rotor includes an impeller and a magnet. The impeller includes a blade disposed in the primary flow path. The housing at least in part defines a fluid chamber spaced radially outward from the primary flow path, with the magnet being located generally within the chamber. The chamber is fluidly interconnected with the primary flow path by a restricted flow conduit. The flow conduit includes substantially orthogonal sections, with a first conduit section extending generally radially outward from the primary flow path and a second conduit section extending from the first section in a generally axial direction, such that fluid is prevented from flowing linearly from the primary flow path to the chamber.

This summary is provided to introduce a selection of concepts in a simplified form. These concepts are further described below in the detailed description of the preferred embodiments. This summary is not intended to identify key features or essential features of the claimed subject matter, nor is it intended to be used to limit the scope of the claimed subject matter.

Various other aspects and advantages of the present invention will be apparent from the following detailed description of the preferred embodiments and the accompanying drawing figures.

BRIEF DESCRIPTION OF THE DRAWING FIGURES

Preferred embodiments of the present invention are described in detail below with reference to the attached drawing figures, wherein:

FIG. **1** is a schematic view of an appliance constructed in accordance with the principles of the present invention;

FIG. **2** is a front perspective view of an electric pump constructed in accordance with the principles of a first embodiment of the present invention;

FIG. **3** is a rear perspective view of the electric pump of FIG. **2**;

FIG. **4** is a front perspective sectional view of the electric pump of FIGS. **2** and **3**, particularly illustrating the mounting of the motor and its positioning relative to the flow path;

FIG. **4***a* is an enlarged fractional front perspective view of a portion of the electric pump of FIGS. **2-4** as shown in FIG. **4**, particularly illustrating the secondary flow path defined by the pump housing and the rotor;

FIG. **5** is a cross-sectional view of the electric pump of FIGS. **2-4**.

FIG. **5***a* is an enlarged fractional cross-sectional view of a portion of the electric pump of FIGS. **2-5** as shown in FIG. **5**, particularly illustrating the secondary flow path defined by the pump housing and the rotor and the lubrication pathway formed between the shaft and the sleeve bearing;

FIG. **6** is a partially sectioned front perspective view of a portion of the electric pump of FIGS. **2-5**, particularly illustrating the three-dimensional structure of the impeller and of the secondary flow path defined by the pump housing (not shown) and the rotor;

FIG. **7** is a front sectional perspective view of an electric pump constructed in accordance with the principles of a second embodiment of the present invention; and

FIG. **8** is an enlarged fractional cross-sectional view of a portion of an electric pump constructed in accordance with the principles of a third embodiment of the present invention.

The drawing figures do not limit the present invention to the specific embodiments disclosed and described herein. The drawings are not necessarily to scale, emphasis instead being placed upon clearly illustrating the principles of the preferred embodiments.

DETAILED DESCRIPTION OF THE PREFERRED EMBODIMENTS

The present invention is susceptible of embodiment in many different forms. While the drawings illustrate, and the specification describes, certain preferred embodiments of the invention, it is to be understood that such disclosure is by way of example only. There is no intent to limit the principles of the present invention to the particular disclosed embodiments.

With initial reference to FIG. **1**, an appliance **10** is depicted. The appliance **10** preferably includes an electric pump assembly **12** and a fluid-influencing mechanism **14**. The appliance **10** also preferably includes a line **16** including an inlet portion **18** that extends from the fluid-influencing mechanism **14** to the pump assembly **12** and an outlet portion **20** that extends from the pump assembly **12** to the fluid-influencing mechanism **14**, such that closed loop for recirculating fluid flow is formed. The line **16** preferably defines a fluid passageway **22**.

The appliance **10** may suitably be any one of a number of appliances, including but not limited to dishwashers; hot tubs; spas; water heaters; heating and air conditioning systems; and radiant heating systems for floors, sidewalks, or driveways. The fluid-influencing mechanism **14** may suitably be any one or more of a number of structures operable to influence or act upon a fluid via agitation, pressurization, heating, or any other mechanism known in the art.

It should also be understood that the appliance **10** may vary from that schematically illustrated in FIG. **1** without departing from the scope of the present invention. For instance, the piping system might vary from the solitary closed-loop arrangement illustrated therein (e.g., through inclusion of auxiliary lines or presentation in a non-closed form), or the fluid-influencing mechanism **14** might be replaced by or provided in addition to another component or components suited to the particular appliance. A condenser or a heat sink might be provided, for instance, or a valve could be added. Ultimately, any appliance configuration known in the art is permissible, contingent on the appliance including a pump assembly in accordance with the present invention. Suitable pump assemblies are described in detail below with reference to first, second, and third preferred embodiments.

Turning to FIGS. **2** and **3**, an electric pump assembly **12** constructed in accordance with a first preferred embodiment of the present invention is depicted for use in an appliance **10**. The pump assembly **12** is encased in a housing **24** defining an inlet opening **26** and an outlet opening **28**. (For the sake of convenience, terms such as "inlet" and "outlet" are used herein. However, it is to be understood that a fluid might flow in an opposite direction such that a component described herein as pertaining to an "inlet" might in fact relate to an "outlet," and vice versa.)

The housing **24** is preferably formed of plastic, although the housing **24** may alternatively be formed of any one or more of a variety of materials without departing from the scope of the present invention.

The inlet opening **26** and the outlet opening **28** are preferably circular in cross-section, although non-circular inlet and/or outlet openings may be provided without departing from the scope of the present invention.

Preferably, the housing **24** comprises multiple portions to allow for ease of assembly of the pump assembly **12** and ease of access to internal components of the pump assembly **12** for maintenance, repair, or replacement. In a preferred embodiment, such portions include an inlet-defining portion **34** and an outlet-defining portion **36** sealed relative to each other by an O-ring **40** (FIGS. **4** and **5**). It is permissible, however, for the housing to comprise more or fewer portions and for the portions, if multiple, to be connected by any means known in the art, including but not limited to adhesives, latches, and tongue-and-groove connections. Furthermore, any means known in the art may be used to seal the interface between the housing portions, if multiple portions are provided.

Preferably, the inlet-defining portion **34** defines the inlet opening **26**, and the outlet-defining portion **36** defines the outlet opening **28**. Even further, it is preferable that the inlet-defining portion **34** includes an inner surface **42** that defines an inlet passageway **44** and that the outlet-defining portion **36** includes an inner surface **46** that defines proximal and distal outlet passageways **48** and **50**, respectively. It is permissible, however, for a single outlet passageway to be provided.

Preferably, the cross-sectional dimensions of the inlet passageway **44** and the proximal and distal outlet passageways **48** and **50** are at least substantially invariant along the axes of the respective passageways **44**, **48**, and **50**, as best shown in FIGS. **4** and **5**. It is permissible, however for axially varying cross-sectional dimensions to be provided. Furthermore, such cross-sectional dimensions are preferably diameters, although non-circular inlet and/or outlet passageways may be provided without departing from the scope of the present invention.

Preferably, the inlet opening cross-sectional dimension is equal to the inlet passageway cross-sectional dimension. Similarly, the outlet opening cross-sectional dimension is preferably equal to the distal outlet passageway cross-sectional dimension. In addition, it is preferable that the inlet opening cross-sectional dimension, the inlet passageway cross-sectional dimension, and the proximal outlet passageway cross-sectional dimension are all equal, with the distal outlet passageway cross-sectional dimension (and the outlet opening cross-sectional dimension) being larger. Such dimensional relationships may be modified without departing from the scope of the present invention, however.

Preferably, a stationary inlet flow guide **58** is provided in the inlet passageway **44**, and a stationary outlet flow guide **60** is located in the outlet passageways **48** and **50**. The flow guides **58** and **60** preferably include respective diverter cones **62** and **64**. Furthermore, each of the flow guides **58** and **60** preferably includes a respective plurality of stationary vanes **66** and **68**. However, it should be understood that use of any one or more of variety of flow guide configurations, including use of no flow guides, falls within the scope of the present invention.

As shown in FIG. **1**, in a preferred embodiment, the inlet portion **18** of the line **16** is connected to the pump assembly **12** adjacent the inlet opening **26**, and the outlet portion **20** of the line **16** is connected to the pump assembly **12** adjacent the outlet opening **28**. Each of said inlet portion **18** and said outlet portion **20** includes a respective straight portion adjacent the respective inlet or outlet opening **26** or **28**. The straight portions are preferably axially aligned with the openings **26** and **28** such that no change in flow direction is necessary in the immediate vicinity of the pump assembly **12**.

The line **16** may suitably be connected adjacent the inlet opening **26** and the outlet opening **28** by any means known in

the art, including but not limited to threaded, grooved, push-type, glued, flanged, or flexible fittings.

As shown in FIG. **4** and others, the pump assembly **12** preferably includes a motor **70** comprising a rotor **72** and a stator **74**. In a preferred embodiment, as illustrated, the stator **74** at least substantially circumscribes the rotor **72**, although it is within the ambit of the present invention for an outer rotor configuration to be utilized.

The stator **74** preferably includes a generally toroidal core **76**, a cover **77** disposed about the core **76**, and a plurality of coils **78** comprising wire **80** wound about the core **76**.

The core **76** preferably comprises a ferromagnetic material such as steel and is preferably laminated. However, it is within the ambit of the present invention for the core to comprise an alternative material and be of an alternative structure. For instance, the core might be integrally formed, be composed of iron, or feature a combination of these or other variations known to one skilled in the art. The core could also comprise a plurality of discrete segments or deviate from the preferred toroidal form without departing from the spirit of the present invention.

The cover **77** is shown schematically to generally represent that the stator core is insulated. That is, the cover **77** as illustrated simply exemplifies that the stator core is preferably insulated in some manner, including but not limited to use of tabs, powder-coating, or other approaches as appropriate to the particular application.

The wire **80** is preferably copper wire, although aluminum wire or other electrically conductive wire may be used without departing from the scope of the present invention.

The housing **24** preferably defines a stator chamber **82**. The stator **74** is preferably received within the stator chamber **82**.

The rotor **72** preferably includes an impeller **84** and a magnet **86**. The impeller **84** preferably includes a hub **88**, a rim **90**, and a plurality of blades **92** extending between the hub **88** and the rim **90**. As is customary, the blades are preferably shaped and pitched to most efficiently cause fluid movement when the impeller is rotated.

Preferably, the rim **90** and the hub **88** are at least substantially annular in form and extend continuously circumferentially. However, it is permissible for voids to be formed in either or both of the hub and the rim.

The impeller may alternatively include a single blade. For instance, a single helical blade might alternatively be provided.

Preferably, the rim **90** circumscribes the hub **88**, with the blades **92** connecting the rim **90** to the hub **88**. However, it is permissible for the rim and the hub to be interconnected by means other than or in addition to the blades. For instance, blades might be provided that extend from the hub but do not engage the rim, with struts, rods, magnets, or other structure being provided for physical connection or non-contacting relative constraint purposes.

As best shown in FIGS. **4** and **5**, the rim **90** preferably includes an inner surface **94** defining an intermediate passageway **96**. Preferably, the cross-sectional dimension of the intermediate passageway **96** is at least substantially invariant along the axis of the rim **90**, although variations may be present without departing from the spirit of the present invention.

Furthermore, it is preferable that the cross-sectional dimension of the intermediate passageway **96** is equal to the cross-sectional dimensions of the inlet passageway **44** and the proximal outlet passageway **48**. Even further, it is preferable that the axes of such passages **44**, **48**, and **96** are in alignment such that the passages **44**, **48**, and **96** form a primary, generally linear flow path **100** of the pump assembly **12**.

It is additionally preferable that the axis of the distal outlet passageway **50** is also coaxial with the above-mentioned axes, such that the distal outlet passageway **50** also cooperatively defines the primary flow path **100**. In such a preferred embodiment, the primary flow path **100** would have an invariant cross-sectional diameter except in the distal outlet passageway **50**, in which the flow path enlarges.

It should be understood that a variety of deviations from the illustrated embodiment, whether in terms of dimensions, number of passages, or some other parameter, may be implemented without departing from the scope of the present invention.

As noted previously, the rotor **72** preferably includes an impeller **84** and a magnet **86**. The magnet **86** is preferably a permanent magnet at least substantially annular in form and extending continuously circumferentially. It is permissible, however, for the magnet **86** to include voids or to comprise multiple magnet pieces. Shape variations are also permissible.

The magnet **86** preferably defines a radially inner surface **102**, a radially outer surface **104**, and a pair of radially extending axially spaced apart end surfaces **106** and **108**.

The magnet **86** preferably circumscribes and abuts the rim **90** of the impeller **84**. However, it is permissible in alternative embodiments for the magnet to be smaller in radial dimension than the rim or even than the hub. In the latter case, positioning of the stator radially inside the magnet (i.e., use of an outer rotor configuration) is likely preferable.

As best shown in FIG. **6**, the rim **90** preferably defines a radially outer surface **110** from which a plurality of circumferentially spaced apart ribs **112** project. A compressible shim **114** is provided on each rib **112**. The magnet **86** preferably includes a plurality of circumferentially spaced apart grooves **116** corresponding to the ribs **112**. In the assembled state, the ribs **112** are received within the grooves **116**, with the shims **114** being compressed between the magnet **86** and the rim **90**. Furthermore, the inner surface **102** of the magnet **86** is preferably maintained in close proximity to (see, for instance, FIG. **5***a*) or in abutment with the outer surface **110** of the rim **90**.

The ribs **112** and grooves **116** cooperatively ensure that the impeller **84** and the magnet **86** are rotationally fixed to one another. However, although the above-described arrangement is preferred, it should be understood that any one or more of a variety of connection or fixation means known in the art are permissible for rotationally securing the impeller and the magnet to each other. For instance, adhesives, post-and-hole, or friction-based arrangements might be used; or the magnet might be encased by the impeller or by another structure. Even further, the impeller and the magnet might alternatively both be molded of the same material so as to be integral with and inseparable from each other.

As best shown in FIGS. **4** and **5**, the housing **24** preferably defines a magnet chamber **118**. The magnet **86** is preferably at least substantially housed within the magnet chamber **118** such that the magnet **86** is remote from and circumscribes the primary flow path **100**, as will be discussed in greater detail below.

As shown in FIGS. **4**, **5**, and others, the rotor **72** preferably includes a stationary shaft **120**. The shaft **120** preferably includes a pair of keyed regions **122** and **124** that interact with respective slots **126** and **128** formed in the inlet flow guide **58** and the outlet flow guide **60**, respectively, so that rotation of the shaft **120** is prohibited. However, any one or more of a variety of shaft fixation means might be used to prevent its rotation, as described further below.

A sleeve bearing **130** preferably circumscribes the shaft **120** and, as best shown in FIG. **5***a*, includes a radial bearing surface **132**. A gap **134** is formed between the shaft **120** and the radial bearing surface **132** and is operable to receive a fluid for lubrication of the sleeve bearing **130**. Because the fluid is used as a lubricant in the illustrated embodiment, the pump **12** is particularly suitable for use with liquids.

The bearing **130** may be formed by any suitable technique, although it is particularly desirable to overmold the bearing **130** in place within the hub **88** and then machine the inside diameter of the bearing **130** as necessary.

Preferably, the sleeve bearing **130** comprises a single, integral piece. However, the bearing may be split into two or more segments without departing from the scope of the present invention.

In a preferred embodiment, the hub **88** of the impeller **84** circumscribes and is attached to the bearing **130** such that the impeller **84** is rotatable with the bearing **130**. Thus, the bearing **130**, the impeller **84**, and the magnet **86** are rotatable in unison relative to the stator **74**, the shaft **120**, and the housing **24** (including the inlet and outlet flow guides **58** and **60**). As will be discussed in more detail below, however, it is within the scope of the present invention for at least some of the rotating components of the preferred embodiment described above to be fixed and for at least some of the stationary components of the preferred embodiment described above to be rotatable. For instance, an alternative bearing arrangement might be used which utilizes a stationary bearing or bearings in combination with a rotating shaft.

The pump assembly **12** also preferably includes a pair of thrust washers **136** and **138**. The thrust washers **136** and **138** are axially spaced apart so as to slidingly engage or nearly abut the ends of the sleeve bearing **130**. More particularly, as shown in FIG. **5***a* and others, the sleeve bearing **130** includes a pair of axially spaced apart axial bearing surfaces **140** and **142** for engagement with corresponding thrust surfaces **144** and **146** on respective ones of the thrust washers **136** and **138**. Preferably, respective gaps **148** and **150** are formed between the axial bearing surfaces **140** and **142** and the corresponding thrust surfaces **144** and **146** to allow for flow of a lubricating fluid therebetween.

Although it is preferable for the thrust surfaces to be provided by thrust washers, the thrust surfaces may be defined by any suitable component of the pump assembly without departing from the scope of the present invention. For instance, a suitable pair of thrust surfaces might be formed on or integrally with the housing itself.

In another permissible alternative, a thrust surface or surfaces might be formed on the shaft. For example, the shaft might include a smaller outer diameter region adjacent and abutting a larger outer diameter region such that a radially extending shoulder or thrust surface is defined at the junction of the larger outer diameter region and the smaller outer diameter region. In such an alternative configuration, the sleeve bearing would preferably be modified to include a smaller inner diameter region corresponding to the smaller outer diameter region of the shaft, as well as a larger inner diameter region corresponding to the larger outer diameter region of the shaft. The smaller and larger inner diameter regions of the bearing are preferably adjacent and abutting each other so that a radially extending shoulder or bearing surface is defined at the junction of the smaller inner diameter region adjacent and the larger inner diameter region. The bearing surface of the sleeve bearing would thus correspond to the thrust surface of the shaft.

In the above alternative embodiment, it is likely preferable for ease of assembly and/or cost-effectiveness to provide only one set of corresponding thrust and bearing surfaces. However, it is within the scope of the present invention for two or more thrust surfaces corresponding to two or more bearing surfaces to be provided.

In a preferred embodiment, as discussed above, the magnet **86** is at least substantially housed in the magnet chamber **118** spaced radially outwardly from the primary flow path **100**. The chamber **118** is preferably fluidly interconnected with the primary flow path **100** by a pair of restricted flow conduits **152** and **154**. Each of said flow conduits **152** and **154** preferably includes substantially orthogonal sections, such that a fluid therein is prevented from flowing linearly from the primary flow path **100** to the magnet chamber **118** or from the magnet chamber **118** to the primary flow path **100**.

More particularly, as best shown in FIG. **5***a*, each of the flow conduits **152** and **154** preferably includes a respective first conduit section **156** or **158** extending generally radially outwardly from the primary flow path **100** and a respective second conduit section **160** or **162** extending from the corresponding first conduit section **156** or **158** in a generally axial direction.

Preferably, the second conduit sections **160** and **162** extend in at least substantially opposite generally axial directions relative to the directions of extension of the corresponding first sections **156** and **158**.

Preferably, each of the first and second conduit sections **156**, **158**, **160**, and **162** is cooperatively defined by the housing **24** and the rotor **72**. More particularly, the first conduit sections **156** and **158** are preferably at least in part cooperatively defined by the housing **24** and the rim **90** of the impeller **84**; and the second conduit sections **160** and **162** are preferably at least in part cooperatively defined by the housing **24** and the magnet **86**.

Preferably, the flow conduit **152**, the chamber **118**, and the flow conduit **154** cooperatively define a secondary flow path **164**. More particularly, the secondary flow path **164** may more accurately be described as being defined cooperatively by the flow conduit **152**, the portion of the chamber **118** not filled by the magnet **86**, and the flow conduit **154**.

The configuration of the secondary flow path **164** is preferably such that a fluid flowing therethrough will be slowed relative to that of a similar or identical fluid flowing through the primary flow path **100**. The fluid in the secondary flow path **164** is preferably thereby operable to provide cooling of the rotor **72** and the stator **74**. Preferably, the fluid is further operable to lubricate the interface between the rotor **72** and the housing **24**. Most preferably, the fluid is operable to lubricate the interface between the rotor **72** and the housing **24** in a region adjacent the stator **74**. Again, the illustrated embodiment is most suitable for use with a liquid. However, use of a liquid is not required.

It is also preferable that the configuration of the secondary flow path **164** is such that debris is restricted from entering the magnet chamber **118**. Such functionality will preferably lead to decreased clogging of the rotor **72** and, in turn, decreased maintenance requirements. Furthermore, by not having a significant portion of fluid flowing through the magnet chamber **118**, inefficiencies associated with diverting flow, turbulence, etc. are reduced.

Although the orthogonally arranged sections described above illustrated a preferred embodiment, it is to be understood that other orthogonal arrangements, in which the flow bends or changes direction at least once along a substantially transverse path, fall within the scope of the present invention. For instance, the sections might be straight and arranged at acute or obtuse angles, or the sections might be curved (e.g., C-shaped or S-shaped sections). Additional sections might be

provided, as well. Ultimately, any one of a variety of tortuous, twisting, zig-zag, labyrinthine, or otherwise indirect configurations may be permissible.

As best shown in FIG. **6**, the flow conduits **152** and **154** preferably extend around the entire circumference of the housing **24** and the rotor **72**, such that the cooling and debris-blocking advantages described above are maximally applied. However, it is permissible within the scope of the present invention for the flow conduits **152** and **154** to be circumferentially discontinuous. In such a case, a single flow conduit might be provided, or one flow conduit might be provided on each axial side. In yet another alternative, a plurality of circumferentially spaced conduits might be provided on one or both axial sides. Other variations fall within the scope of the present invention, as well.

In operation of the first preferred embodiment as described above, a fluid flows from the fluid-influencing mechanism **14**, through the inlet portion **18** of the line **16**, and into the inlet opening **26** of the pump assembly **12**. The fluid is then drawn through the inlet passageway **44** and is directed by the inlet flow guide **58** into the intermediate passageway **96** that passes through the rotor **72**. The impeller **84**, as it rotates about the stationary shaft **120** on the sleeve bearing **130**, drives the flow.

Preferably, a first auxiliary portion of the fluid flows into the gaps **134**, **148**, and **150** so as to lubricate and cool the bearing **130**.

Furthermore, a second auxiliary portion of the fluid is preferably diverted into the secondary flow path **164**. More particularly, a second auxiliary portion of the fluid is preferably diverted into the flow conduit **152** and, in turn, into the magnet chamber **118**. The fluid will preferably move slowly through the chamber **118** before exiting through the flow conduit **154** to rejoin the fluid in the primary flow path **100**. It is permissible, however, for some or all of the fluid that enters the chamber **118** via the flow conduit **152** to remain in the chamber **118** during operation of the pump assembly **12** or even after the operation of the pump assembly **12** is complete. In essence, fluid is diverted to fill the chamber **118** but not necessarily flow through it at the same rate as fluid flowing along the primary flow path **100**.

Any fluid continuing to flow through the intermediate passageway **96** (i.e., rather than being diverted for bearing **130** lubrication or into the secondary flow path **164**) is preferably directed by the outlet flow guide **60** into and through the proximal and distal outlet passageways **48** and **50**, respectively. The fluid then flows through the outlet portion **20** of the line **16** to the fluid-influencing mechanism **14**, and the cycle repeats.

Rotation of the rotor **72**, its interactions with the stator **74**, and the energized stator **74** itself produce heat which is advantageously dissipated by the appropriate utilization of fluid flowing through the pump assembly **12**, as described above.

Rotation of the rotor **72** also results in axial loading of the rotor in a direction dependent on its direction of rotation. That is, rotation in a counter-clockwise direction will lead to axial loading in a first direction, while rotation in a clockwise direction will lead to axial loading in a second axial direction, opposite the first axial direction. Provision of a sleeve bearing **130** having axial bearing surfaces **140** and **142**, as well as thrust washers **136** and **138** having thrust surfaces **144** and **146**, accommodates such axial loading regardless of which direction of rotation is used. That is, it is permissible for the rotor **72** rotation direction to be reversed, thus reversing the direction of the flow (such that the outlet opening **28** acts as an inlet, the inlet opening **26** acts as an outlet, etc.), without the loss of load-resolving abilities. However, although a bi-directional pump assembly **12** with dual thrust washers **136** and **138** and axial bearing surface **140** and **142** on the sleeve bearing **130** is preferred, it is within the scope of the present invention for the rotor to be rotatable in a single direction only and for a single thrust washer and axial bearing surface to be provided.

In addition to the load and heat dispersion advantages described above, the pump assembly **12** constructed in accordance with the preferred embodiment described above also reduces flow losses and increases hydraulic efficiency and well as motor efficiency. The pump is operable at high speeds and, due to its in-line configuration, is suitable for placement in appliances in which space constraints are a concern. Even further, the simplicity of the design leads to lower manufacturing and assembly costs.

With reference to FIG. **7**, an electric pump assembly **210** constructed in accordance with a second preferred embodiment of the present invention is depicted for use in the appliance **10** shown in FIG. **1**. It is initially noted that, with certain exceptions to be discussed in detail below, many of the elements of the pump assembly **210** of the second embodiment are the same as or very similar to those described in detail above in relation to the pump assembly **12** of the first embodiment. Therefore, for the sake of brevity and clarity, redundant descriptions and numbering will be generally avoided here. Unless otherwise specified, the detailed descriptions of the elements presented above with respect to the first embodiment should therefore be understood to apply at least generally to the second embodiment, as well.

The pump assembly **210** preferably includes a housing **212** defining an inlet opening **214** and an outlet opening **216**. A stationary inlet flow guide **218** including a plurality of vanes **220** is preferably positioned in or adjacent the inlet opening **214**, and a stationary outlet flow guide **222** including a plurality of vanes **224** is preferably positioned in or near the outlet opening **216**. The housing **212** and the inlet flow guide **218** cooperatively define a primary flow path **226** through the pump assembly **210**.

The pump assembly **210** preferably includes a motor **228** comprising a rotor **230** and a stator **232**. The stator **232** preferably includes a generally toroidal core **234** and a plurality of coils **236** comprising wire **238** wound about the core **234**.

The rotor **230** preferably includes a rotatable shaft **240**, an impeller **242**, and a magnet **244**. The impeller **242** preferably includes a hub **246**, a rim **248** that circumscribes the hub **246**, and a plurality of blades **250** extending between and interconnecting the hub **246** and the rim **248**. The magnet **244** is preferably annular in form and circumscribes the rim **248**. Furthermore, the magnet **244** is preferably fixed to the rim **248** such that the impeller **242** and the magnet **244** rotate in unison.

The magnet **244** preferably defines a radially inner surface **252**, a radially outer surface **254**, and a pair of radially extending, axially spaced apart end surfaces **256** and **258**. The magnet **244** is preferably positioned within the primary flow path **226** such that a fluid flowing therethrough would be obstructed by the magnet **244**. More particularly, a fluid flowing from the inlet opening **214** through the primary flow path **226** would be obstructed by the end surface **256**.

Preferably, a circumferential gap **260** is formed between the outer surface **254** of the magnet and the housing **212** such that a lubricating fluid may flow into the gap **260** to provide lubrication and cooling.

In a preferred embodiment, the shaft **240** includes first and second ends **262** and **264**, respectively. The ends **262** and **264** are rotatably supported by respective bearing systems **266**

and **268** that are mounted on the inlet flow guide **218** and the outlet flow guide **222**, respectively.

A pair of thrust washers **270** and **272** is provided, as well. Preferably, the thrust washers **270** and **272** are fixed to axially opposite ends of the impeller **242** to rotate therewith.

The impeller **242** is fixed to the shaft **240** by any suitable means known in the art such that the shaft **240**, the impeller **242**, the thrust washers **270** and **272**, and the magnet **244** rotate in unison.

In operation of the second preferred embodiment as described above, a fluid flows from a fluid-influencing mechanism (not shown) to the pump assembly **210** in a similar manner to that described above with reference to the first preferred embodiment. However, rather than flowing though a labyrinthine secondary flow path to provide cooling of the rotor **230** and the stator **232**, incoming fluid impacts the end surface face **256** of the magnet **244** and flows into the gap **260** between the magnet **244** and the housing **212**.

Also in contrast to the operation of the first preferred embodiment, the shaft **240** of the second preferred embodiment is rotatable and is supported by bearing systems **266** and **268** at the shaft ends **262** and **264**, respectively.

With reference to FIG. **8**, a portion of an electric pump assembly **310** constructed in accordance with a third preferred embodiment of the present invention is depicted for use in the appliance **10** shown in FIG. **1**. It is initially noted that, with certain exceptions to be discussed in detail below, many of the elements of the pump assembly **310** of the third embodiment are the same as or very similar to those described in detail above in relation to the pump assembly **12** of the first embodiment. Therefore, for the sake of brevity and clarity, redundant descriptions and numbering will be generally avoided here. Unless otherwise specified, the detailed descriptions of the elements presented above with respect to the first embodiment should therefore be understood to apply at least generally to the third embodiment, as well.

The pump assembly **310** preferably includes a shaft **312** having an end **314**, a sleeve bearing **316** that preferably circumscribes the shaft **312** and is rotatable relative thereto, and a thrust washer **318** that also preferably circumscribes the shaft **312**. The thrust washer **318** is preferably positioned axially adjacent the sleeve bearing **316** so as to slidably engage or nearly abut the sleeve bearing **316**.

The pump assembly **310** also preferably includes an inlet flow guide **320** that defines a slot **322** having a proximal region **324** and a distal region **326**. The distal region **326** is preferably constricted relative to the proximal region **324**, such that a shoulder **328** is formed at the transition between the regions **324** and **326**. The proximal and distal regions define inner surfaces **330** and **332**, respectively. The end **314** of the shaft **312** preferably extends into and is received within the slot **322**.

A groove **334** is preferably formed in the end **314** of the shaft **312**. The groove **334** is preferably circumferentially continuous, although it is within the scope of the present invention for the groove to be non-continuous or to be non-circumferential.

In a preferred embodiment, the pump assembly **310** also includes an O-ring. The O-ring **336** is preferably positioned in the groove **334** so as to circumscribe the shaft **312**. The O-ring **336**, the shaft **312**, the groove **334**, the proximal region **324** of the slot **322**, and the thrust washer **318** are preferably sized and positioned relative to one another such that the O-ring **336** contacts and is placed in compression by the shaft **312**, the shoulder **328**, the inner surface **330** of the proximal region **324** of the slot **322**, and the thrust washer **318**. The O-ring is thus operable due to frictional forces to restrict or at least substantially prevent rotation of the shaft **312** relative to the stationary components of the pump assembly **310**.

The O-ring is preferably circular, elliptical, oval, or otherwise regular in cross-section and toroidal in shape but is shown in a compressed condition in FIG. **8**. However, it is within the scope of the present invention for an O-ring having an irregular cross-section or overall shape to be provided.

Although the above description presents features of preferred embodiments of the present invention, other preferred embodiments may also be created in keeping with the principles of the invention. Furthermore, as noted previously, these other preferred embodiments may in some instances be realized through a combination of features compatible for use together despite having been presented independently as part of separate embodiments in the above description.

The preferred forms of the invention described above are to be used as illustration only and should not be utilized in a limiting sense in interpreting the scope of the present invention. Obvious modifications to the exemplary embodiments, as hereinabove set forth, could be readily made by those skilled in the art without departing from the spirit of the present invention.

The inventors hereby state their intent to rely on the Doctrine of Equivalents to determine and assess the reasonably fair scope of the present invention as pertains to any apparatus not materially departing from but outside the literal scope of the invention set forth in the following claims.

What is claimed is:

1. An appliance comprising:

a fluid line presenting a fluid passageway;

a mechanism coupled to the line so as to be operable to act on fluid within the passageway; and

an axial flow pump operable to move fluid along the passageway, said pump including—

a housing coupled to the fluid line, with the housing at least in part defining a primary flow path therethrough that is fluidly connected to the passageway, and

a motor including a rotor and a stator,

said rotor including an impeller and a magnet,

said impeller including a blade disposed in the primary flow path,

said housing at least in part defining a fluid chamber spaced radially outward from the primary flow path,

said chamber being fluidly interconnected with the primary flow path by a first restricted flow conduit and a second restricted flow conduit,

each of said flow conduits including substantially orthogonal sections, with a first conduit section extending generally radially outward from the primary flow path and a second conduit section extending between the first section and the chamber in a generally axial direction, such that fluid is prevented from flowing linearly between the primary flow path and the chamber, said pump configured such that fluid flows sequentially from the primary flow path, through the first flow conduit, and into the chamber,

said magnet being located generally within the chamber.

2. The appliance as claimed in claim **1**,

said flow conduits and said chamber cooperatively defining a secondary flow path.

3. The appliance as claimed in claim **2**,

said secondary flow path being configured to slow fluid flow therethrough relative to fluid flow through the primary flow path.

4. The appliance as claimed in claim **3**,

said magnet being disposed in the secondary flow path.

5. The appliance as claimed in claim 1,
said impeller including a substantially annular hub and a substantially annular rim that is spaced radially from the hub and supports the magnet,
said blade extending between and interconnecting said hub and said rim.
6. The appliance as claimed in claim 1,
said impeller including a plurality of blades.
7. The appliance as claimed in claim 1,
said rotor further including a stationary shaft and a sleeve bearing rotatably supported on the shaft, wherein said impeller is fixed to the sleeve bearing for rotational movement therewith.
8. The appliance as claimed in claim 7,
said pump including a stationary bearing surface facing a first generally axial direction,
said sleeve bearing including an axial bearing face engaging the stationary bearing surface so as to permit rotational movement of the sleeve bearing relative to the stationary bearing surface while restricting relative axial movement of the sleeve bearing.
9. The appliance as claimed in claim claim 8,
said pump including a second stationary bearing surface facing a second generally axial direction that is at least substantially opposite the first generally axial direction,
said sleeve bearing including a second axial bearing face engaging the second stationary bearing surface so as to permit rotational movement of the sleeve bearing relative to the second stationary bearing surface while restricting relative axial movement of the sleeve bearing.
10. The appliance as claimed in claim 8,
said stationary bearing surface being defined by a thrust washer.
11. The appliance as claimed in claim 8,
said stationary bearing surface being defined by a thrust washer,
said housing including an inlet flow guide and an outlet flow guide,
one of said flow guides supporting the thrust washer.
12. The appliance as claimed in claim 7,
said sleeve bearing including a radial bearing face engaging the shaft so as to permit rotational movement of the sleeve bearing relative to the shaft.
13. The appliance as claimed in claim 7,
said impeller including a substantially annular rim that is spaced radially from the sleeve bearing and supports the magnet.
14. The appliance as claimed in claim 13,
said impeller including a substantially annular hub that at least substantially circumscribes and is fixed to said sleeve bearing,
said blade extending between and interconnecting said hub and said rim.
15. The appliance as claimed in claim 7,
said pump further including an O-ring compressed by and frictionally engaging the shaft and the housing,
said O-ring at least substantially preventing rotation of the shaft relative to the housing.
16. The appliance as claimed in claim 15,
said O-ring being compressed by and frictionally engaging the stationary bearing surface.
17. The appliance as claimed in claim 1,
said housing including an inlet flow guide and an outlet flow guide,
each of said flow guides including a plurality of flow-diverting vanes.
18. The appliance as claimed in claim 1,
said rotor further including a stationary shaft,
said pump further including an O-ring compressed by and frictionally engaging the shaft and the housing,
said O-ring at least substantially preventing rotation of the shaft relative to the housing.
19. The appliance as claimed in claim 18,
said pump further including a stationary bearing surface,
said O-ring being compressed by and frictionally engaging the stationary bearing surface.
20. The appliance as claimed in claim 1,
said magnet circumscribing the primary flow path.
21. The appliance as claimed in claim 1,
said motor being a permanent magnet motor,
said magnet being a permanent magnet.
22. The appliance as claimed in claim 1,
said pump further configured such that fluid flows sequentially from the chamber, through the second flow conduit, and into the primary flow path.
23. The appliance as claimed in claim 1,
said rotor further including an elongated rotatable shaft that presents opposite ends,
said impeller fixed to the shaft for rotational movement therewith,
said impeller including a substantially annular rim that is spaced radially from the shaft and supports the magnet,
said pump further including a pair of bearing systems rotatably supporting the shaft on the housing, with each of the bearing systems being located adjacent a respective end of the shaft.
24. The appliance as claimed in claim 23,
said rotor further including a pair of rotatable bearing surfaces, wherein a first one of said rotatable bearing surfaces faces a first generally axial direction and the other other of said rotatable bearing surfaces faces a second generally axial direction that is at least substantially opposite the first generally axial direction,
each of said bearing systems including an axial bearing face engaging a respective one of the rotatable bearing surfaces so as to permit rotational movement of the corresponding rotatable bearing surface relative to the axial bearing face while restricting relative axial movement of the rotatable bearing surface.
25. The appliance as claimed in claim 24,
each of said rotatable bearing surfaces being defined by a thrust washer,
wherein said thrust washers are fixed to said impeller to rotate therewith.
26. The appliance as claimed in claim 23,
said impeller including a substantially annular hub that at least substantially circumscribes said shaft,
said blade extending between and interconnecting said hub and said rim.
27. The appliance as claimed in claim 23,
said impeller including a plurality of blades.
28. The appliance as claimed in claim 23,
said housing including an inlet flow guide and an outlet flow guide,
each of said flow guides including a plurality of flow-diverting vanes.
29. The appliance as claimed in claim 28,
said inlet flow guide supporting a first one of said bearing systems,
said outlet flow guide supporting a second one of said bearing systems.

* * * * *