US009456333B2

(12) **United States Patent**
Sekaran et al.

(10) **Patent No.: US 9,456,333 B2**
(45) **Date of Patent: Sep. 27, 2016**

(54) **CENTRALIZED ROUTING IN HYBRID NETWORKS**

(71) Applicant: **Microsoft Corporation**, Redmond, WA (US)

(72) Inventors: **Mahendra Sekaran**, Sammamish, WA (US); **Vijay Kishen Hampapur Parthasarathy**, Sammamish, WA (US); **Anish Desai**, Bellevue, WA (US); **Ramkumar Natarajan**, Redmond, WA (US); **Jeffrey Kay**, Bellevue, WA (US); **John Bruner**, Bellevue, WA (US); **Ray Froelich**, Redmond, WA (US); **Tript Singh Lamba**, Bothell, WA (US); **Bayo Olatunji**, Seattle, WA (US); **Amey Parandekar**, Mercer Island, WA (US); **Vishal Ghotge**, Seattle, WA (US); **Andrew Peter Schoorl**, Redmond, WA (US); **Eugen Pajor**, Newcastle, WA (US); **Shaun Pierce**, Bellevue, WA (US); **Dhigha Sekaran**, Redmond, WA (US); **Frank Stephen Serdy, Jr.**, Sammamish, WA (US); **John Skovron**, Bellevue, WA (US); **Reid Kuhn**, Kirkland, WA (US)

(73) Assignee: **MICROSOFT TECHNOLOGY LICENSING, LLC**, Redmond, WA (US)

(*) Notice: Subject to any disclaimer, the term of this patent is extended or adjusted under 35 U.S.C. 154(b) by 0 days.

(21) Appl. No.: **14/327,314**

(22) Filed: **Jul. 9, 2014**

(65) **Prior Publication Data**

US 2016/0014591 A1 Jan. 14, 2016

(51) **Int. Cl.**
H04W 8/02 (2009.01)
H04W 12/00 (2009.01)
(Continued)

(52) **U.S. Cl.**
CPC ***H04W 8/02*** (2013.01); ***H04M 7/0075*** (2013.01); ***H04M 7/1285*** (2013.01);
(Continued)

(58) **Field of Classification Search**
CPC H04L 65/1069; H04L 65/1053; H04L 65/1016; H04L 65/1006; H04L 65/104; H04L 65/403; H04L 12/5695; H04M 3/42314; H04M 2203/1091; H04M 7/006; H04Q 2213/1307; H04Q 2213/13098; H04Q 2213/13091
See application file for complete search history.

(56) **References Cited**

U.S. PATENT DOCUMENTS

6,148,206 A 11/2000 Karanja et al.
6,335,927 B1 * 1/2002 Elliott et al. 370/352
(Continued)

FOREIGN PATENT DOCUMENTS

CA 2009887 A1 * 12/2008 ..... H04M 3/42314
CN 101656922 A 2/2010
(Continued)

OTHER PUBLICATIONS

Whitwam, Ryan, "Republic Wireless Moto X Review: A Great Deal with Very Few Compromises", Published on: Dec. 4, 2013, Available at: http://www.androidpolice.com/2013/12/03/republic-wireless-moto-x-review-a-great- deal-with-very-few-compromises/ (12 pages total).
(Continued)

Primary Examiner — Matthew Sams
(74) *Attorney, Agent, or Firm* — Miia Sula; Judy Yee; Micky Minhas

(57) **ABSTRACT**

A mobile device utilizes a two-stage dialing solution when roaming on a visited mobile operator (MO) network to implement centralized routing so that a home network portion of a hybrid network is inserted into the path of outbound calls. A remote centralized routing (CR) service interoperates with a CR client on the mobile device. When a call is initiated to a remote party, the CR client calls into an arbitrary roaming routing number that is terminated in the home network. Once the call is connected between the mobile device and home network, the CR client sends a dialing string that includes a destination number of the remote party. The CR service calls the destination number and then bridges the calls to the mobile device and remote party to establish an end-to-end call path between the local and far ends of the call that traverses the home network.

20 Claims, 20 Drawing Sheets

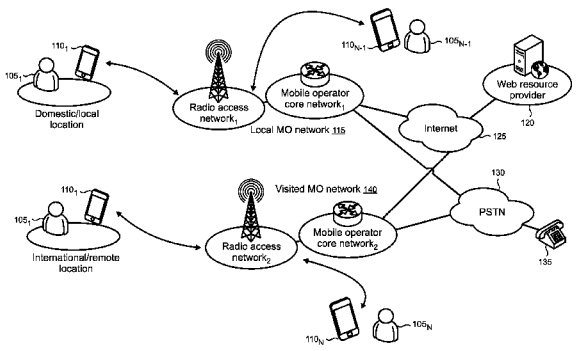

(51) **Int. Cl.**
H04M 7/00 (2006.01)
H04M 7/12 (2006.01)

(52) **U.S. Cl.**
CPC ***H04W 12/00*** (2013.01); *H04M 2203/1091* (2013.01); *H04M 2203/152* (2013.01); *H04M 2207/203* (2013.01); *H04M 2207/206* (2013.01)

(56) **References Cited**

U.S. PATENT DOCUMENTS

6,343,220	B1	1/2002	Van Der Salm	
6,490,449	B1	12/2002	Thibert et al.	
6,518,957	B1	2/2003	Lehtinen	
6,763,226	B1	7/2004	McZeal, Jr.	
7,010,002	B2	3/2006	Chow et al.	
7,110,750	B2	9/2006	Oishi et al.	
7,411,911	B2	8/2008	Huotari et al.	
7,483,984	B1	1/2009	Jonker et al.	
7,631,270	B2	12/2009	Cunningham et al.	
7,697,479	B2	4/2010	Metke et al.	
7,706,291	B2	4/2010	Luft et al.	
7,746,989	B2	6/2010	Mazor	
7,796,998	B1	9/2010	Zellner et al.	
7,830,863	B2	11/2010	Biage et al.	
7,835,751	B2 *	11/2010	Ibe	H04W 36/14 370/338
7,894,807	B1	2/2011	Drennan	
7,903,794	B1	3/2011	Bales et al.	
7,986,943	B2	7/2011	Bumiller	
7,995,565	B2	8/2011	Buckley et al.	
8,000,710	B2	8/2011	Jagadeesan et al.	
8,032,122	B2	10/2011	Sigmund et al.	
8,126,465	B2	2/2012	Lu et al.	
8,155,084	B2	4/2012	Long et al.	
8,254,986	B2	8/2012	Russell	
8,670,405	B1	3/2014	Lee	
8,976,950	B2 *	3/2015	Kramarenko	H04M 3/42314 370/352
9,001,787	B1	4/2015	Conant	
2002/0059453	A1	5/2002	Eriksson et al.	
2002/0146000	A1	10/2002	Jonsson et al.	
2003/0231759	A1 *	12/2003	Bedingfield et al.	379/355.01
2004/0047339	A1	3/2004	Wang et al.	
2004/0121761	A1	6/2004	Tripathy et al.	
2004/0203607	A1	10/2004	Satapathy	
2004/0240430	A1	12/2004	Lin et al.	
2005/0070291	A1 *	3/2005	Shi	455/445
2005/0186960	A1 *	8/2005	Jiang	H04L 29/06027 455/435.1
2005/0249196	A1	11/2005	Ansari et al.	
2005/0286466	A1	12/2005	Tagg et al.	
2006/0029049	A1	2/2006	Kobayashi et al.	
2006/0030357	A1 *	2/2006	McConnell	H04M 3/42314 455/554.1
2006/0045069	A1	3/2006	Zehavi et al.	
2006/0121902	A1	6/2006	Jagadeesan et al.	
2006/0133582	A1	6/2006	McCulloch	
2006/0187900	A1	8/2006	Akbar	
2006/0198360	A1	9/2006	Biage et al.	
2006/0245413	A1	11/2006	Skalecki et al.	
2007/0070948	A1	3/2007	Kezys et al.	
2007/0081518	A1	4/2007	Jain et al.	
2007/0083918	A1 *	4/2007	Pearce	H04L 63/0428 726/5
2007/0086584	A1	4/2007	Rossini	
2007/0197224	A1 *	8/2007	Winkler	H04W 76/02 455/445
2007/0206568	A1 *	9/2007	Silver	H04L 12/66 370/352
2007/0206571	A1 *	9/2007	Silver	H04W 76/025 370/352
2007/0217366	A1	9/2007	Sagi et al.	
2007/0263613	A1	11/2007	Hara et al.	
2008/0026732	A1 *	1/2008	Goldfarb	H04L 12/581 455/414.1
2008/0032695	A1	2/2008	Zhu et al.	
2008/0056235	A1	3/2008	Albina et al.	
2008/0096560	A1	4/2008	Felske et al.	
2008/0102815	A1	5/2008	Sengupta et al.	
2008/0113683	A1	5/2008	Paas	
2008/0123625	A1	5/2008	Buckley	
2008/0192900	A1 *	8/2008	Liu	379/87
2008/0232352	A1	9/2008	Terrill et al.	
2008/0242299	A1	10/2008	Edwards	
2008/0254797	A1	10/2008	Achtari et al.	
2008/0261603	A1 *	10/2008	Sever	H04M 1/274566 455/445
2008/0279176	A1	11/2008	Cheng	
2009/0003316	A1 *	1/2009	Lee	H04L 12/5692 370/352
2009/0086937	A1	4/2009	Horn et al.	
2009/0097450	A1	4/2009	Wallis et al.	
2009/0141682	A1	6/2009	Zou et al.	
2009/0191876	A1	7/2009	Jain et al.	
2009/0233602	A1	9/2009	Hughes	
2009/0249247	A1	10/2009	Tseng	
2009/0285175	A1	11/2009	Nix	
2009/0305732	A1	12/2009	Marcellino	
2010/0080128	A1	4/2010	Hovey et al.	
2010/0124897	A1 *	5/2010	Edge	455/404.1
2010/0172323	A1	7/2010	Rexhepi et al.	
2010/0172483	A1	7/2010	Weiner	
2010/0226339	A1	9/2010	Stephenson et al.	
2010/0246785	A1	9/2010	Wang	
2010/0285785	A1	11/2010	Wang	
2010/0304724	A1 *	12/2010	Lawler	H04M 3/42 455/414.1
2010/0316199	A1	12/2010	Martin, II	
2011/0044293	A1	2/2011	Nagasawa	
2011/0103576	A1	5/2011	Partington et al.	
2012/0014273	A1	1/2012	Notton et al.	
2012/0115490	A1 *	5/2012	Nicholson	H04M 3/4228 455/445
2012/0120914	A1	5/2012	Sedlacek et al.	
2012/0140743	A1	6/2012	Pelletier	
2012/0196644	A1 *	8/2012	Scherzer et al.	455/524
2012/0236868	A1	9/2012	Yan	
2012/0282942	A1	11/2012	Uusitalo	
2012/0296963	A1	11/2012	Lu	
2013/0007286	A1	1/2013	Mehta et al.	
2013/0035138	A1	2/2013	Abbott	
2013/0064106	A1	3/2013	Sylvain	
2013/0067056	A1	3/2013	Purkayastha et al.	
2013/0100887	A1	4/2013	Kim	
2013/0196653	A1	8/2013	Morrison	
2013/0196706	A1	8/2013	Patel et al.	
2013/0331101	A1 *	12/2013	Thomas et al.	455/435.1
2014/0068314	A1	3/2014	Kim	
2014/0070991	A1	3/2014	Liu	
2014/0254491	A1 *	9/2014	Lindholm	H04L 65/1016 370/328
2014/0269495	A1	9/2014	Frantz	
2015/0038156	A1	2/2015	Kilpatrick, II	
2015/0065134	A1	3/2015	Vandemoere et al.	

FOREIGN PATENT DOCUMENTS

EP	1432219	A1	6/2004
EP	1519526	A1	3/2005
EP	1858270	A1	11/2007
EP	2009887	A1	12/2008
EP	2096843	A2	9/2009
EP	2112849	A2	10/2009
EP	2271171	A1	1/2011
JP	2002-262336	A	9/2002
WO	0013454	A1	3/2000
WO	02/11475	A1	2/2002
WO	2004/057845	A1	7/2004
WO	2005055626	A1	6/2005
WO	2005101785	A1	10/2005
WO	2008110664	A1	9/2008

(56) **References Cited**

FOREIGN PATENT DOCUMENTS

WO	2009040645 A1	4/2009
WO	2013025698 A1	2/2013

OTHER PUBLICATIONS

Perenson, Melissa, "Republic Wireless: Everything You Need to Know", Published on: Aug. 28, 2013, Available at: http://blog.laptopmag.com/republic-wireless-faq (6 pages total).

"ip4calls-iTelHybridDialer", Published on: Jul. 17, 2013, Available at: https://play.google.com/store/apps/details?id=com.revesoft.hybriddialer.first_united_international_general_trading_.ip4calls&hl=en (2 pages total).

Whitwam, Ryan, "A Google Engineer Explains Why KitKat has White Status Bar Icons and Only Shows Connectivity in Quick Settings", Published on: Nov. 18, 2013, Available at: http://www.androidpolice.com/2013/11/18/a-google-engineer-explains-why-kitkat-has-white-status-bar-icons-and-only-shows-connectivity-in-quick-settings/ (9 pages total).

Ormond, et al., "Dynamic Network Selection in Wireless LAN/MAN Heterogeneous Networks", In Proceedings of Mobile WiMAX: Towards Broadband Wireless Metropolitan Area Networks, Dec. 10, 2007, (60 pages total).

Alkhwlani, et al., "Access Network Selection using Combined Fuzzy Control and MCDM in Heterogeneous Networks", In Proceedings of International Conference on Computer Engineering & Systems, Nov. 27, 2007, (6 pages total).

Porjazoski, et al., "Radio Access Technology Selection in Heterogeneous Wireless Networks Based on Service Type and User Mobility", In Proceedings of 18th International Conference on Systems, Signals and Image Processing, Jun. 16, 2011, (4 pages total).

Adamopoulou, et al., "Intelligent Access Network Selection in Heterogeneous Networks", In 2nd International Symposium on Wireless Communication Systems, Sep. 7, 2005, (5 pages total).

Alkhawlani, et al., "Hybrid Approach for Radio Network Selection in Heterogeneous Wireless Networks", In International Journal of Advanced Science and Technology, vol. 44, Jul. 2012, (16 pages total).

Cai, et al., "Dynamic and User-Centric Network Selection in Heterogeneous Networks", In Proceedings of IEEE International Performance, Computing, and Communications Conference, Apr. 11, 2007, (7 pages total).

Gharsellaoui, et al., "Optimizing Access Point Selection in Wireless Local Area Networks", In Proceedings of International Conference on Communications and Information Technology, Mar. 29, 2011, (6 pages total).

Jafry, et al., "Call Handoff Initiation in Hybrid Networks", U.S. Appl. No. 14/144,668, filed Dec. 31, 2013.

Calhan, et al., "An Adaptive Neuro-Fuzzy Based Vertical Handoff Decision Algorithm for Wireless Heterogeneous Networks", In IEEE 21st International Symposium Personal Indoor and Mobile Radio Communications, Sep. 26, 2010, (6 pages total).

Yan, et al., "A Survey of Vertical Handover Decision Algorithms in Fourth Generation Heterogeneous Wireless Networks", In Computer Networks: The International Journal of Computer and Telecommunications Networking, vol. 54, Issue 11, Aug. 2010, (16 pages total).

Liu, et al., "Performance Analysis and Optimization of Handoff Algorithms in Heterogeneous Wireless Networks", In IEEE Transactions on Mobile Computing, vol. 7, Issue 7, Jul. 2008, (12 pages total).

Wong, et al., "A Pattern Recognition System for Handoff Algorithms", In IEEE Journal on Selected Areas in Communications, vol. 18, Issue 7, Jul. 2000, (12 pages total).

Sidhu, et al., "Call Continuity", US Appl. No. 14/026,933, filed Sep. 13, 2013.

Kalmanek, et al., "A Network-Based Architecture for Seamless Mobility Services", In IEEE Communications Magazine, vol. 44, Issue 6, Jun. 2006 (7 pages total).

Salkintzis, et al., "Voice Call Handover Mechanisms in Next-Generation 3GPP Systems", In IEEE Communications Magazine, vol. 47, Issue 2, pp. 46-56, Feb. 2009 (11 pages total).

Voice Call Flow Overview, 2007 Cisco Systems, Inc., pp. 1-14, Retrieved from: http://www.cisco.com/en/US/docs/ios/voice/monitor/configuration/guide/vt_callflow_ov.pdf, Retrieved on: Jun. 17, 2013 (14 pages total).

J. Rosenberg, "Interactive Connectivity Establishment (ICE): A Protocol for Network Address Translator (NAT) Traversal for Offer/Answer Protocols", IETF Trust (Apr. 2010), Retrieved from: http://www.rfc-editor.org/rfc/rfc5245.txt, Retrieved on: Sep. 12, 2013 (110 pages total).

M. Baugher, et al., "The Secure Real-time Transport Protocol (SRTP)", The Internet Society (Mar. 2004), Retrieved from: http://www.rfc-editor.org/rfc/rfc3711.txt, Retrieved on: Sep. 12, 2013 (53 pages total).

J. Rosenberg, et al., "SIP: Session Initiation Protocol", The Internet Society (Jun. 2002), Retrieved from: http://www.rfc-editor.org/rfc/rfc3261,txt, Retrieved on: Sep. 12, 2013 (252 pages total).

H. Schulzrinne, et al., "RTP: A Transport Protocol for Real-Time Applications", The Internet Society (Jul. 2003), Retrieved from: http://www.rfc-editor.org/rfc/rfc3550.txt, Retrieved on: Sep. 12, 2013 (98 pages total).

Bryan, et al., "Sosimple: A SIP/Simple Based P2P VoIP and IM System," Computer Science Department, College a of William and Mary, Williamsburg, VA, Retrieved from: http://www.enseirb.fr/~kadionik/sip/paper, Retrieved Date: Sep. 16, 2013 (6 pages total).

Rauhala, J., "Universal SIP client for consumer devices," Helsinki University of Technology, Department of Electrical Communications Engineering, Thesis submitted May 13, 2003, Retrieved from: http://scholar.google.com/url?sa=U&q=http://antoine.fressancourt.free.fr/exjobb/BX_Universal, Retrieved Date: Sep. 16, 2013 (64 pages total).

Santos, et al., "Deployment of a Wireless Hybrid and Mobile Network for VoIP Services Based on Open Source Software," Universidade Federal de Campina Grande, Retrieved From: http://www.inf.int-evry.fr/~olberger/wfs2006/danilo, Retrieved Date: Sep. 16, 2013 (20 pages total).

"Route to Home", Published on: Mar. 10, 2012, Available at: http://www.inovar.com/products/RouteToHome.html (1 page total).

"Smart Call Routing", Retrieved on: Dec. 31, 2013, Available at: http://www.roamware.com/downloads/datasheets/Smart%20Call%20Routing.pdf (2 pages total).

"Roaming Call Optimizer," Published on: Mar. 22, 2011, Available at: http://www.starhome.com/call-optimization.html (1 page total).

"Mobile Collaboration", Retrieved on: Dec. 31, 2013, Available at: http://www.cisco.com/en/US/docs/voice_ip_comm/cucm/smd/collab09/mobilapp.htmln (39 pages total).

"Optimal Call Routing", Retrieved on: Dec. 31, 2013, Available at: http://www.bics.com/content/ocr (2 pages total).

Bellavista, et al., "An IMS Vertical Handoff Solution to Dynamically Adapt Mobile Mulitmedia Services", IEEE Symposium on Computers and Communications, Jul. 6, 2008, pp. 764-771, 8 pages.

Achour et al., "Inter-Domain Mobility Management Solution for Service Continuity in IMS-Based Networks", IEEE Consumer Communications and Networking Conference, Jan. 14, 2012, pp. 559-564, 6 pages.

"International Search Report and Written Opinion Received for PCT Patent Application No. PCT/US2014/068685", Mailed Date: Feb. 11, 2015, 7 Pages.

"International Search Report and Written Opinion Issued in PCT Application No. PCT/US2015/39310", Mailed Date: Oct. 14, 2015, (10 Pages total).

"International Search Report and Written Opinion Issued in PCT Application No. PCT/US2015/028679", Mailed Date: Aug. 26, 2015, (11 Pages total).

"International Preliminary Report on Patentability Issued in PCT Application No. PCT/US2014/054633", Mailed Date: Aug. 21, 2015, 6 Pages total.

"International Search Report and Written Opinion Issued in PCT Patent Application No. PCT/US2015/020848", Mailed Date: Jun. 9, 2015, (11 Pages total).

(56) **References Cited**

OTHER PUBLICATIONS

"International Search Report & Written Opinion Received for PCT Application No. PCT/US2015/023453", Mailed Date: Jun. 22, 2015, (12 Pages total).

"International Preliminary Report on Patentability Issued in PCT Application No. PCT/US2014/068685", Mailed Date: Jun. 26, 2015, (6 Pages total).

Ryan Whitman, "A Google Engineer Explains Why KitKat Has White Status Bar Icons and Only Shows Connectivity in Quick Settings", available at <http://www.androidpolice.com/2013/11 /18/a-goog le-eng ineer-explains-why-kitkat-has-wh ite-status-baricons-and-only-shows-connectivity-in-quick-settings/>, available on Nov. 18, 2013, (3 pages total).

"International Search Report and Written Opinion Issued in PCT Application No. PCT/US2015/056290", Mailed Date: Feb. 1, 2016, (15 Pages total).

"Second Written Opinion Issued in PCT Application No. PCT/US2015/023453", Mailed Date: Mar. 1, 2016, 6 Pages.

Second Written Opinion Issued in PCT Application No. PCT/US2015/020848, Mailed Date: Mar. 30, 2016, (7 pages total).

Corey Gunther, "What's this icon? Galaxy S4 notification bar icons explained", available on Jul. 9, 2013, available at <http://androidcommunity.com/whats-this-icon-galaxy-s4-notification-bar-icons-explained-20130709/>, (3 pages total).

designyourway.com, "User Interface Design Inspiration—45 Lovely Switches", avaible at <http://www.designyourway.net/drb/user-interface-desig n-inspiration-45-lovely-switches>, archived on 0712012013 at wayback machine <http://web.archive.org>, (16 pages total).

International Preliminary Report on Patentability issued in PCT Application No. PCT/US2015/023453, mailed date: Jun. 17, 2016 (10 pages total).

International Preliminary Report on Patentability Issued in PCT Application No. PCT/US2015/39310, Mailed Date: Jun. 2, 2016, (6 pages total).

International Preliminary Report on Patentability Issued in PCT Application No. PCT/US2015/020848, Mailed Date: Jun. 28, 2016, 8 pages.

* cited by examiner

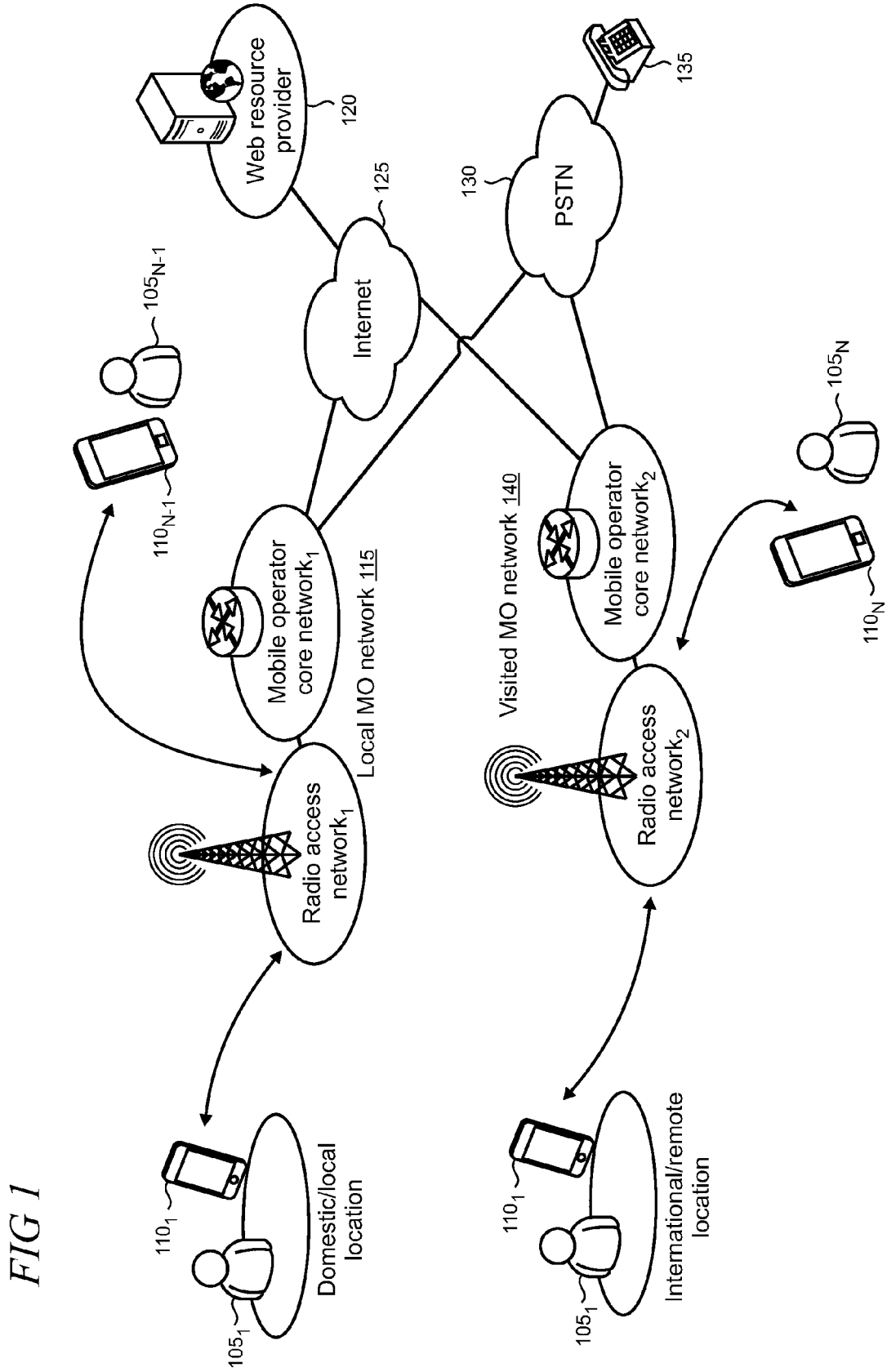
Web resource provider
120
Internet
125
PSTN
130
135
105_{N-1}
110_{N-1}
Mobile operator core network$_1$
Local MO network 115
Radio access network$_1$
Visited MO network 140
Mobile operator core network$_2$
Radio access network$_2$
105_N
110_N
110_1
105_1
Domestic/local location
110_1
105_1
International/remote location

FIG 1

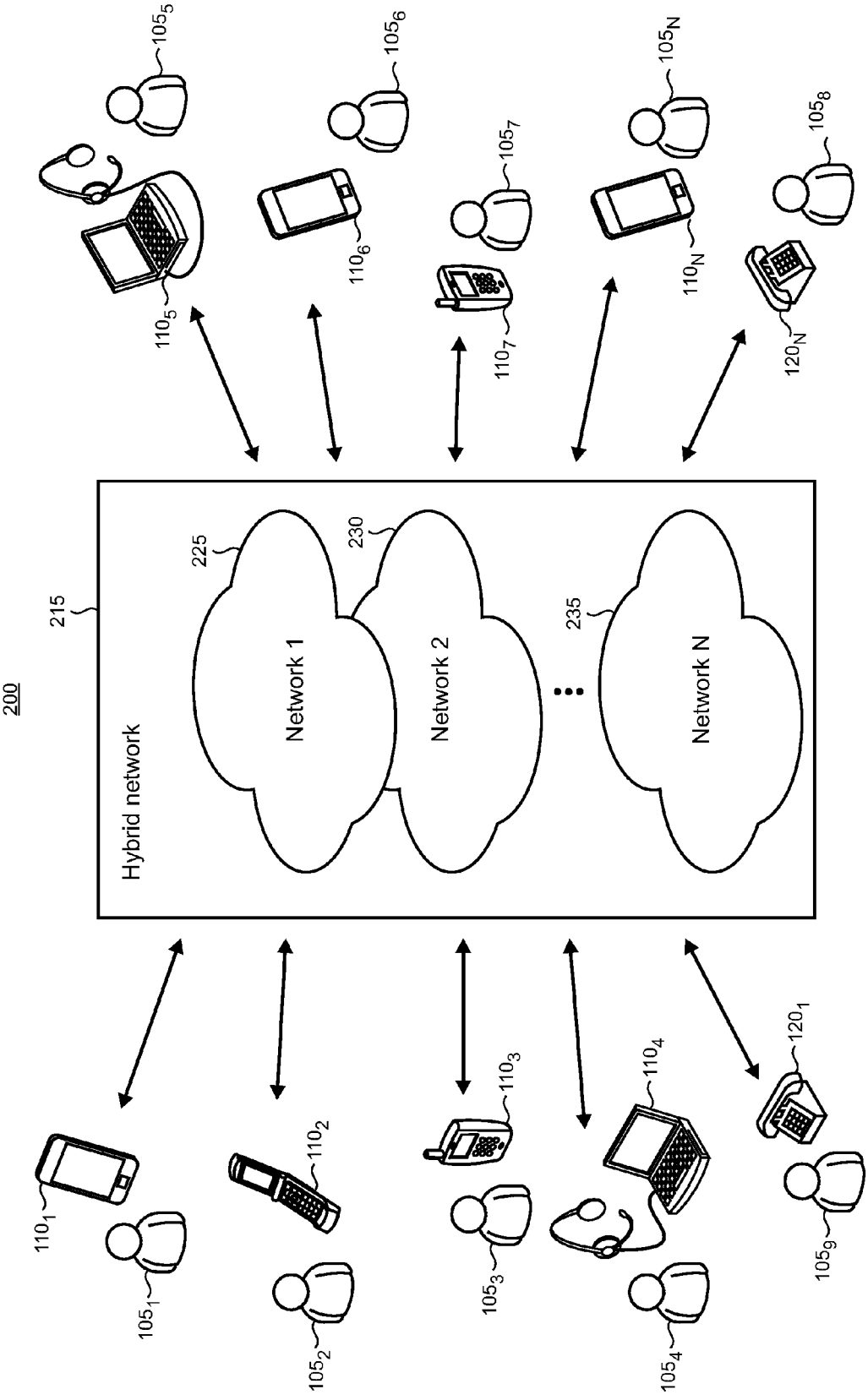
200
215
Hybrid network
225
Network 1
230
Network 2
235
Network N
105_1
110_1
105_2
110_2
105_3
110_3
105_4
110_4
105_5
110_5
105_6
110_6
105_7
110_7
105_8
120_N
105_N
110_N
120_1
105_9

FIG 2

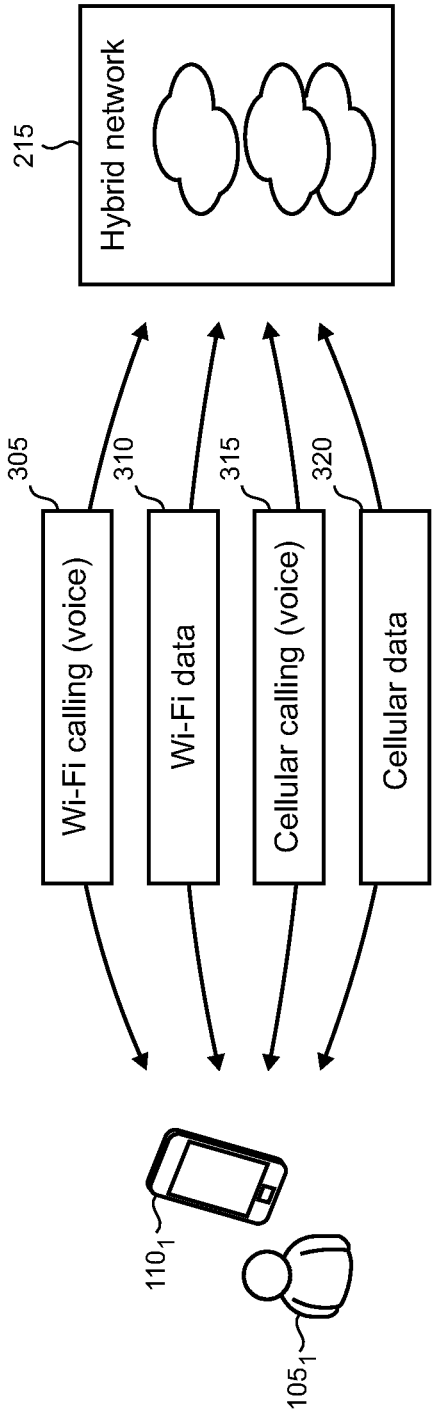
215
Hybrid network
305
310
315
320
Wi-Fi calling (voice)
Wi-Fi data
Cellular calling (voice)
Cellular data
110_1
105_1

FIG 3

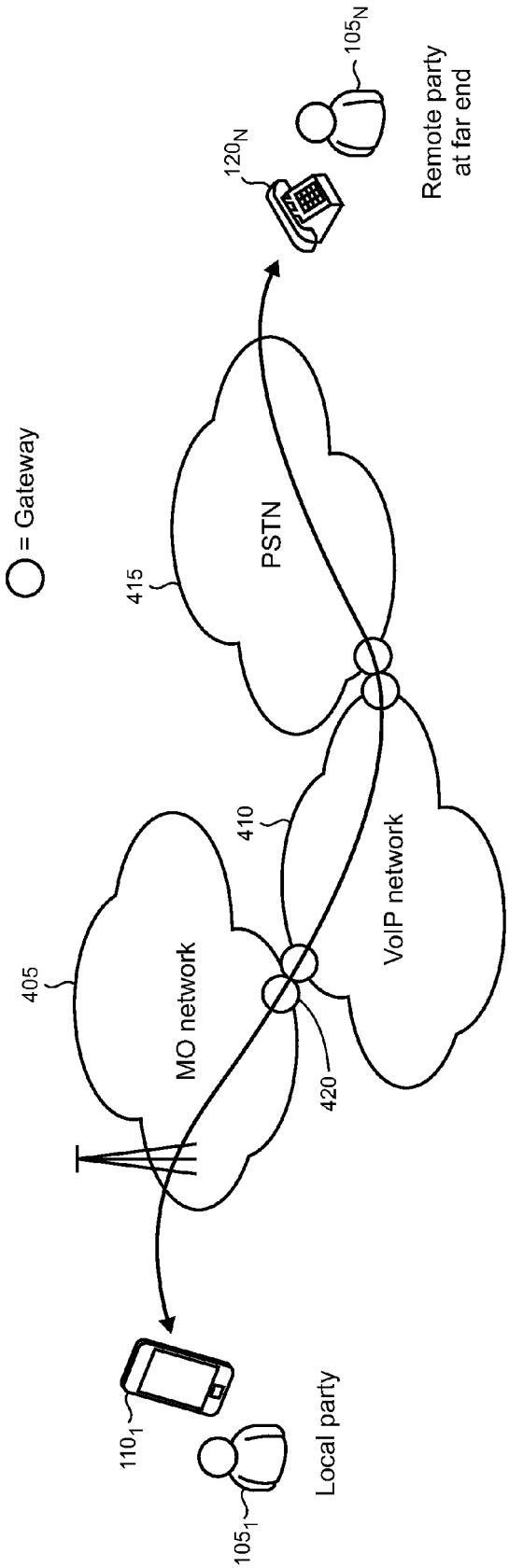
105N
Remote party at far end
120N
= Gateway
415
PSTN
410
VoIP network
405
MO network
420
110₁
105₁
Local party

FIG 4

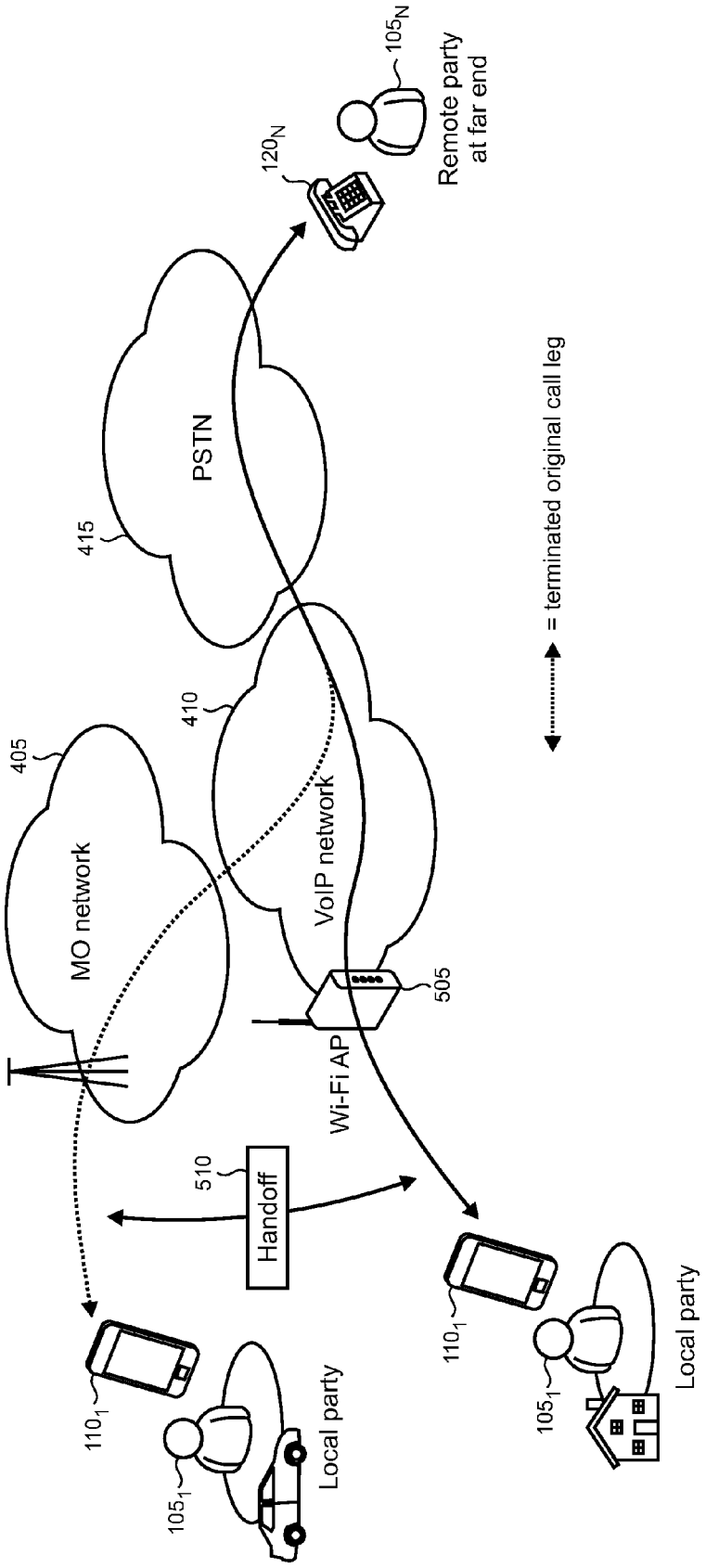
105_N
Remote party at far end
120_N
PSTN
415
410
405
MO network
VoIP network
505
Wi-Fi AP
510
Handoff
110_1
105_1
Local party
110_1
105_1
Local party
= terminated original call leg

FIG 5

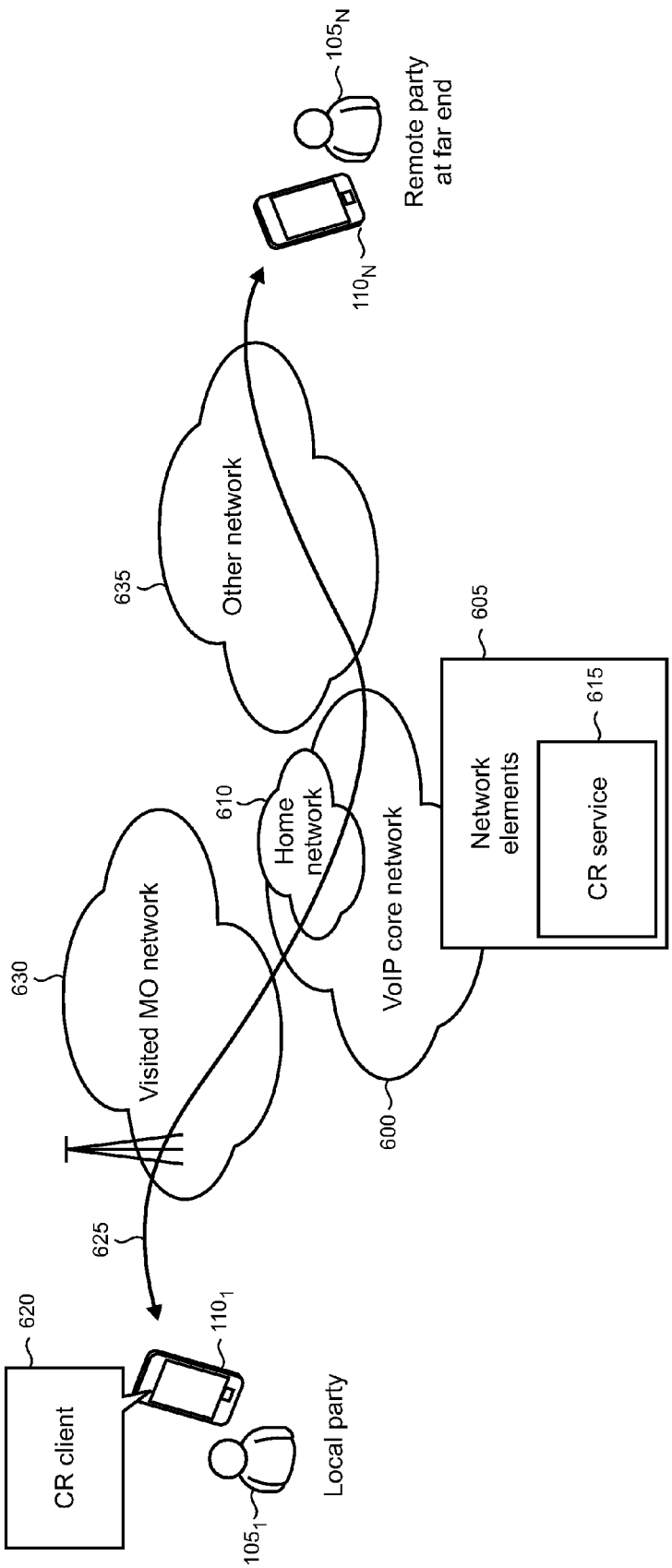
105N
Remote party at far end
110N
635
Other network
605
615
Network elements
CR service
610
Home network
VoIP core network
630
Visited MO network
600
625
620
CR client
1101
1051
Local party

FIG 6

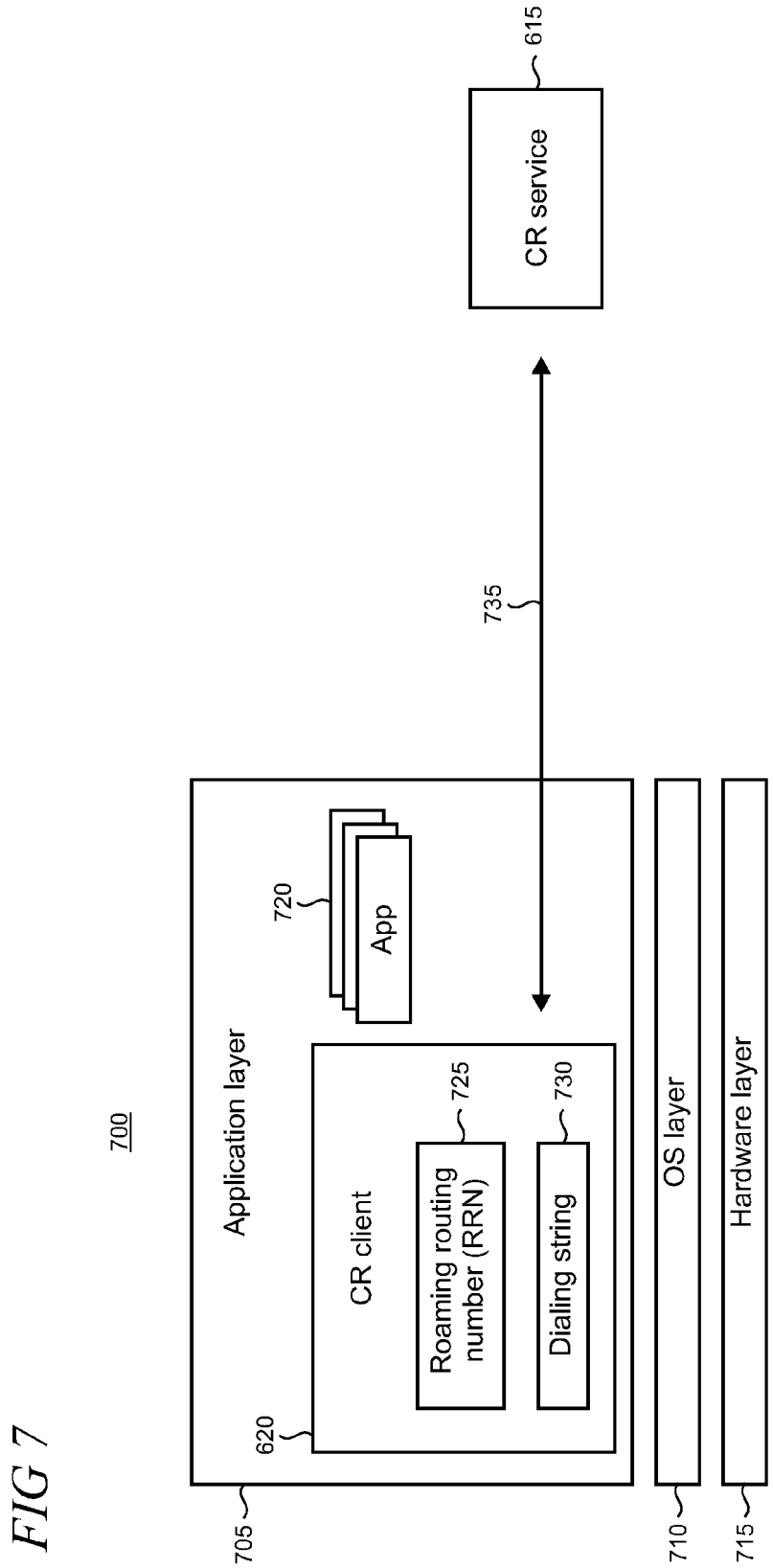
700
615
CR service
735
Application layer
720
App
CR client
620
Roaming routing number (RRN)
725
Dialing string
730
OS layer
Hardware layer
705
710
715

FIG 7

FIG 8

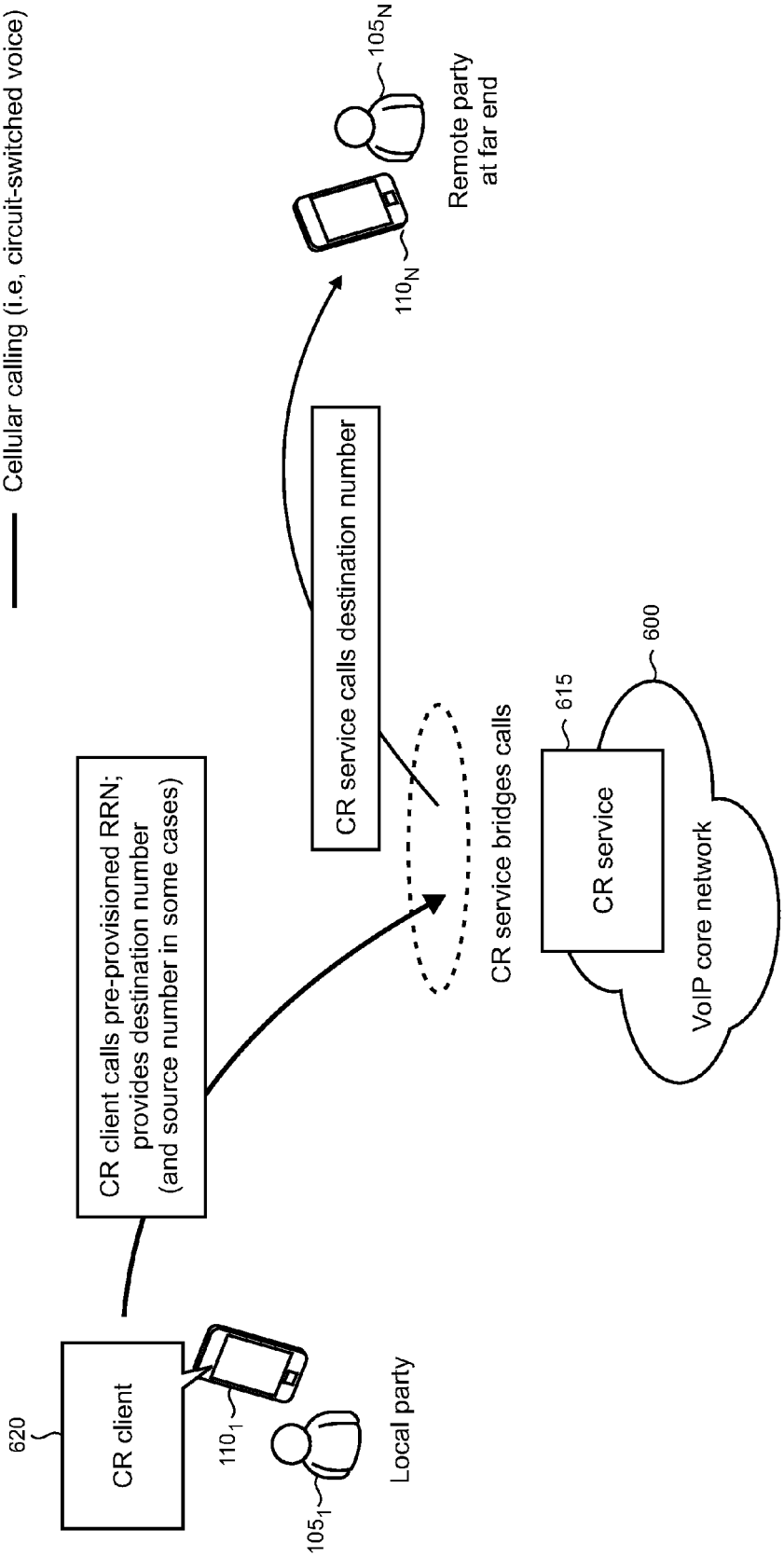
Cellular calling (i.e, circuit-switched voice)
620
CR client
110_1
105_1
Local party
CR client calls pre-provisioned RRN; provides destination number (and source number in some cases)
CR service calls destination number
CR service bridges calls
615
CR service
600
VoIP core network
110_N
105_N
Remote party at far end

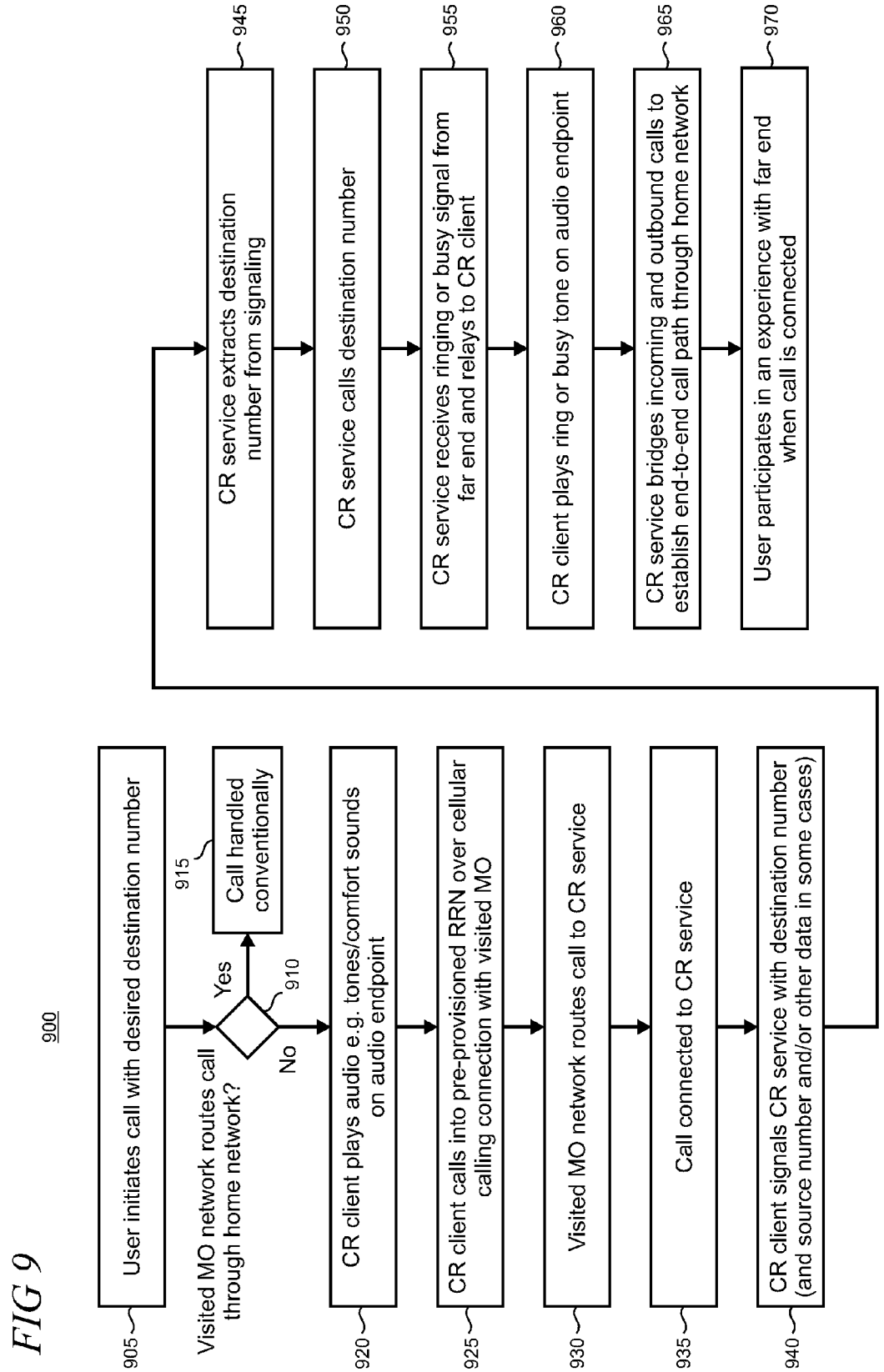
900
905
User initiates call with desired destination number
Visited MO network routes call through home network?
910
Yes
915
Call handled conventionally
No
920
CR client plays audio e.g. tones/comfort sounds on audio endpoint
925
CR client calls into pre-provisioned RRN over cellular calling connection with visited MO
930
Visited MO network routes call to CR service
935
Call connected to CR service
940
CR client signals CR service with destination number (and source number and/or other data in some cases)
945
CR service extracts destination number from signaling
950
CR service calls destination number
955
CR service receives ringing or busy signal from far end and relays to CR client
960
CR client plays ring or busy tone on audio endpoint
965
CR service bridges incoming and outbound calls to establish end-to-end call path through home network
970
User participates in an experience with far end when call is connected

FIG 9

FIG 10

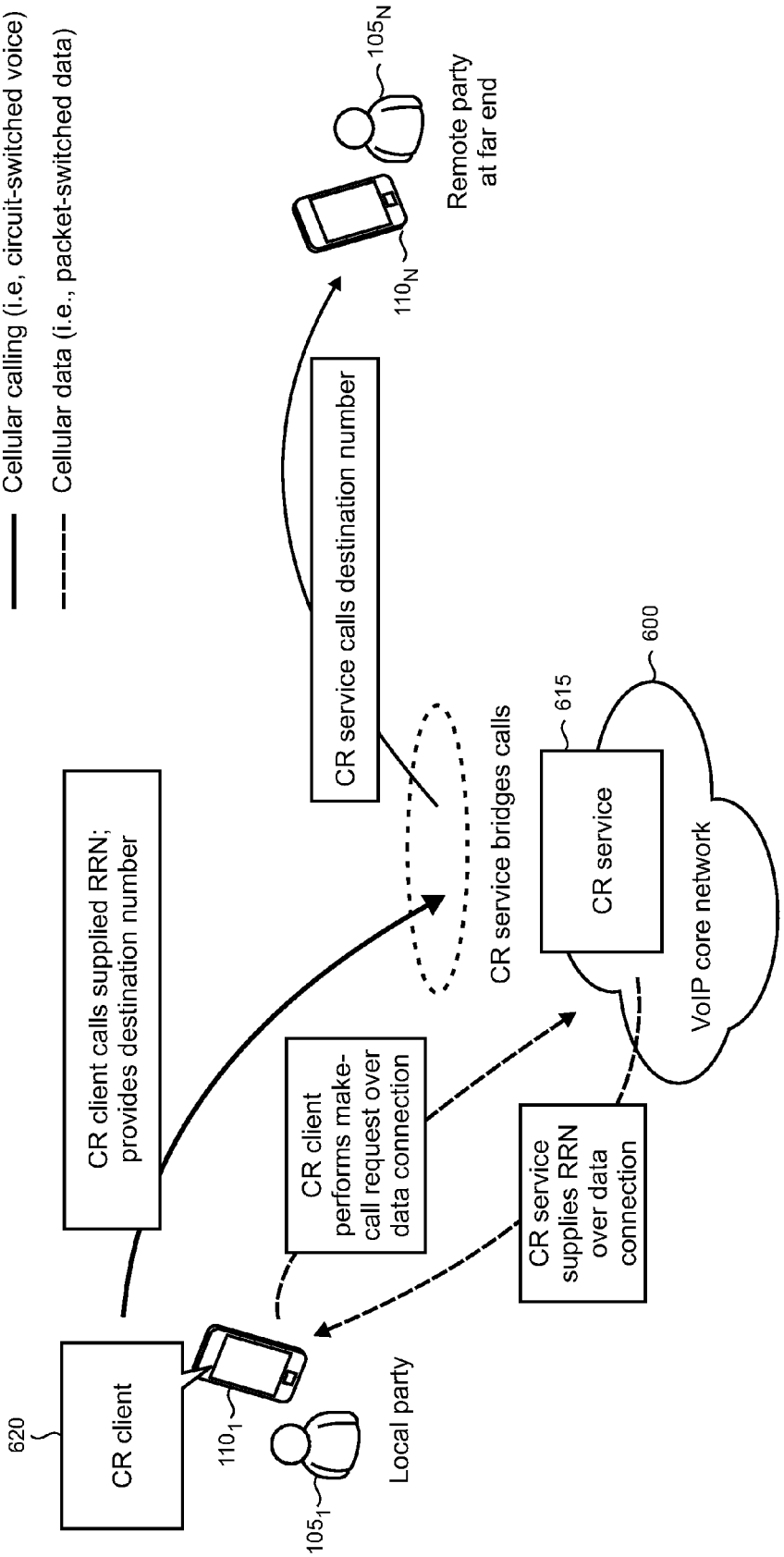
Cellular calling (i.e, circuit-switched voice)
Cellular data (i.e., packet-switched data)
620
CR client
110_1
105_1
Local party
CR client calls supplied RRN; provides destination number
CR client performs make-call request over data connection
CR service supplies RRN over data connection
CR service bridges calls
CR service calls destination number
615
CR service
600
VoIP core network
110_N
105_N
Remote party at far end

FIG 11

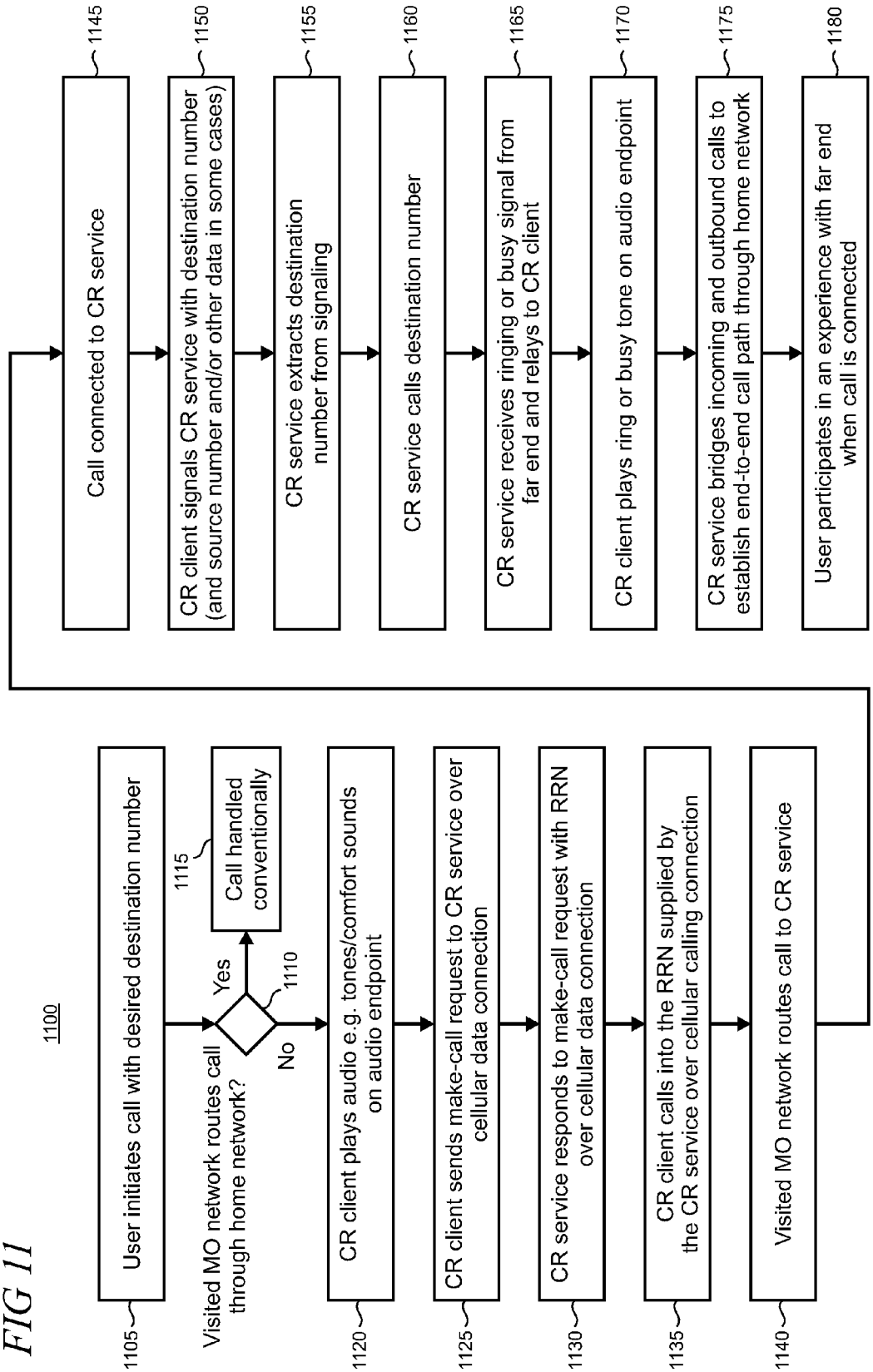
1100
User initiates call with desired destination number
1105
Visited MO network routes call through home network?
1110
Yes
No
1115
Call handled conventionally
CR client plays audio e.g. tones/comfort sounds on audio endpoint
1120
CR client sends make-call request to CR service over cellular data connection
1125
CR service responds to make-call request with RRN over cellular data connection
1130
CR client calls into the RRN supplied by the CR service over cellular calling connection
1135
Visited MO network routes call to CR service
1140
Call connected to CR service
1145
CR client signals CR service with destination number (and source number and/or other data in some cases)
1150
CR service extracts destination number from signaling
1155
CR service calls destination number
1160
CR service receives ringing or busy signal from far end and relays to CR client
1165
CR client plays ring or busy tone on audio endpoint
1170
CR service bridges incoming and outbound calls to establish end-to-end call path through home network
1175
User participates in an experience with far end when call is connected
1180

FIG 12

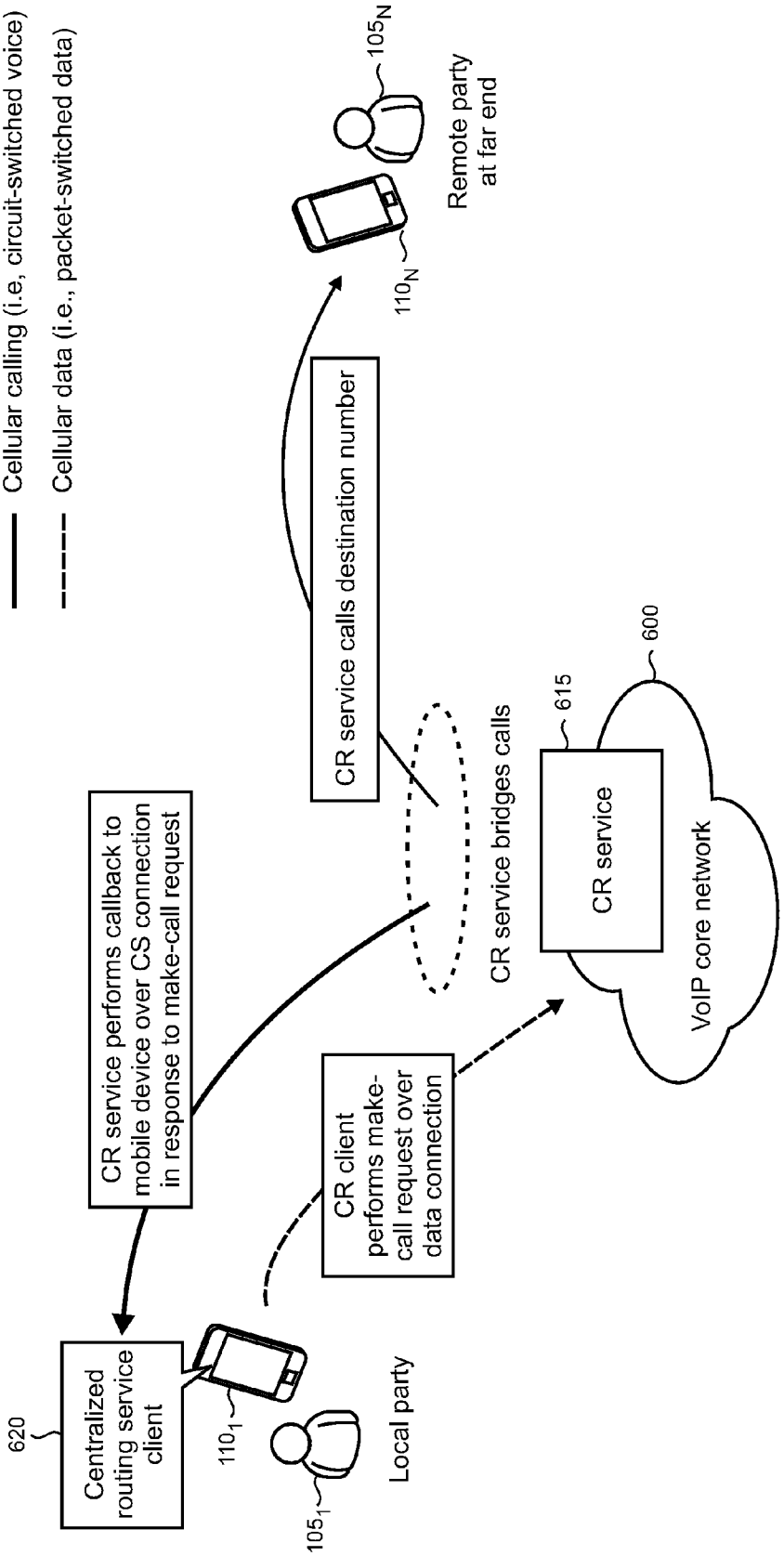
Cellular calling (i.e, circuit-switched voice)
Cellular data (i.e., packet-switched data)
620
Centralized routing service client
110_1
105_1
Local party
CR client performs make-call request over data connection
CR service performs callback to mobile device over CS connection in response to make-call request
CR service calls destination number
110_N
105_N
Remote party at far end
CR service bridges calls
615
CR service
600
VoIP core network

FIG 13

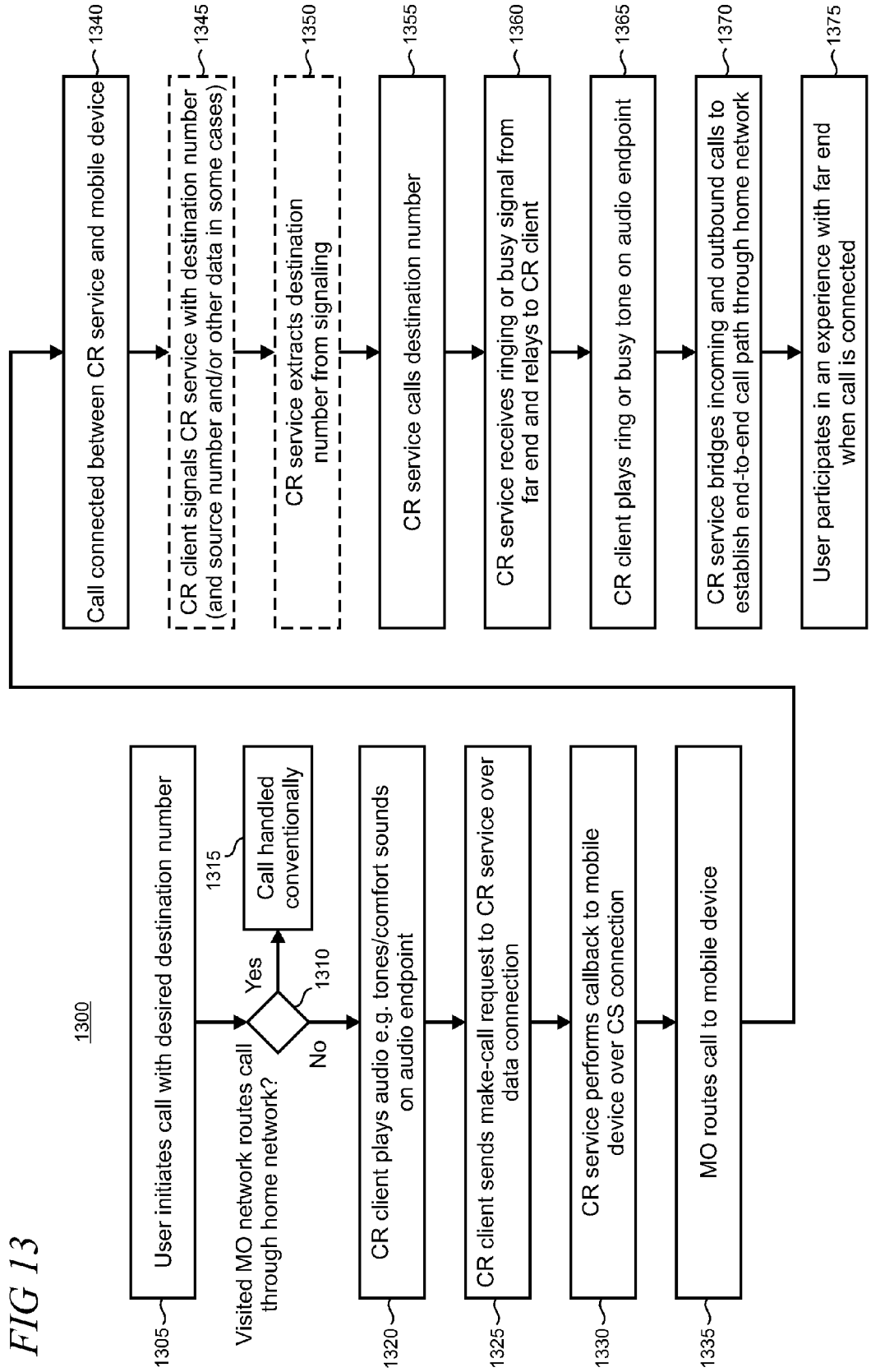
1300
1305
User initiates call with desired destination number
Visited MO network routes call through home network?
1310
Yes
No
1315
Call handled conventionally
1320
CR client plays audio e.g. tones/comfort sounds on audio endpoint
1325
CR client sends make-call request to CR service over data connection
1330
CR service performs callback to mobile device over CS connection
1335
MO routes call to mobile device
1340
Call connected between CR service and mobile device
1345
CR client signals CR service with destination number (and source number and/or other data in some cases)
1350
CR service extracts destination number from signaling
1355
CR service calls destination number
1360
CR service receives ringing or busy signal from far end and relays to CR client
1365
CR client plays ring or busy tone on audio endpoint
1370
CR service bridges incoming and outbound calls to establish end-to-end call path through home network
1375
User participates in an experience with far end when call is connected

FIG 14

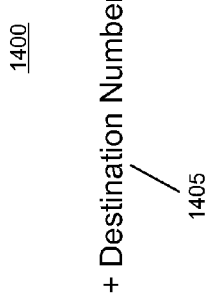

FIG 15

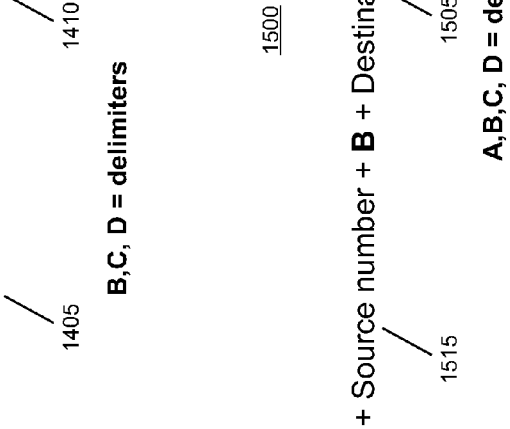

FIG 16

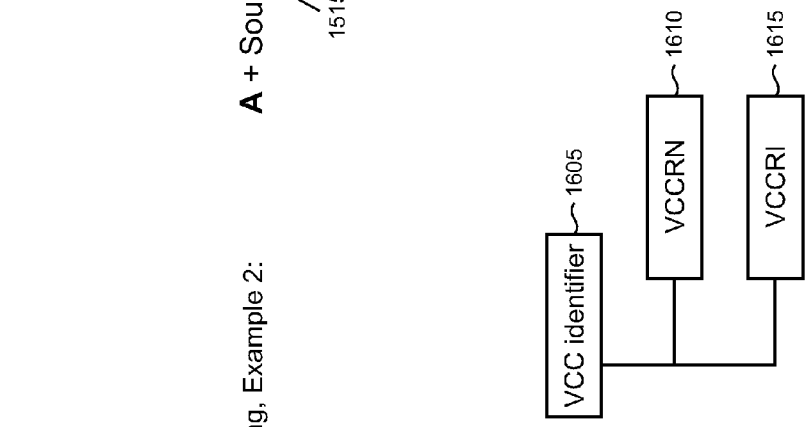

FIG 17

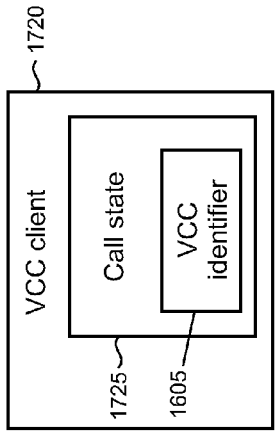

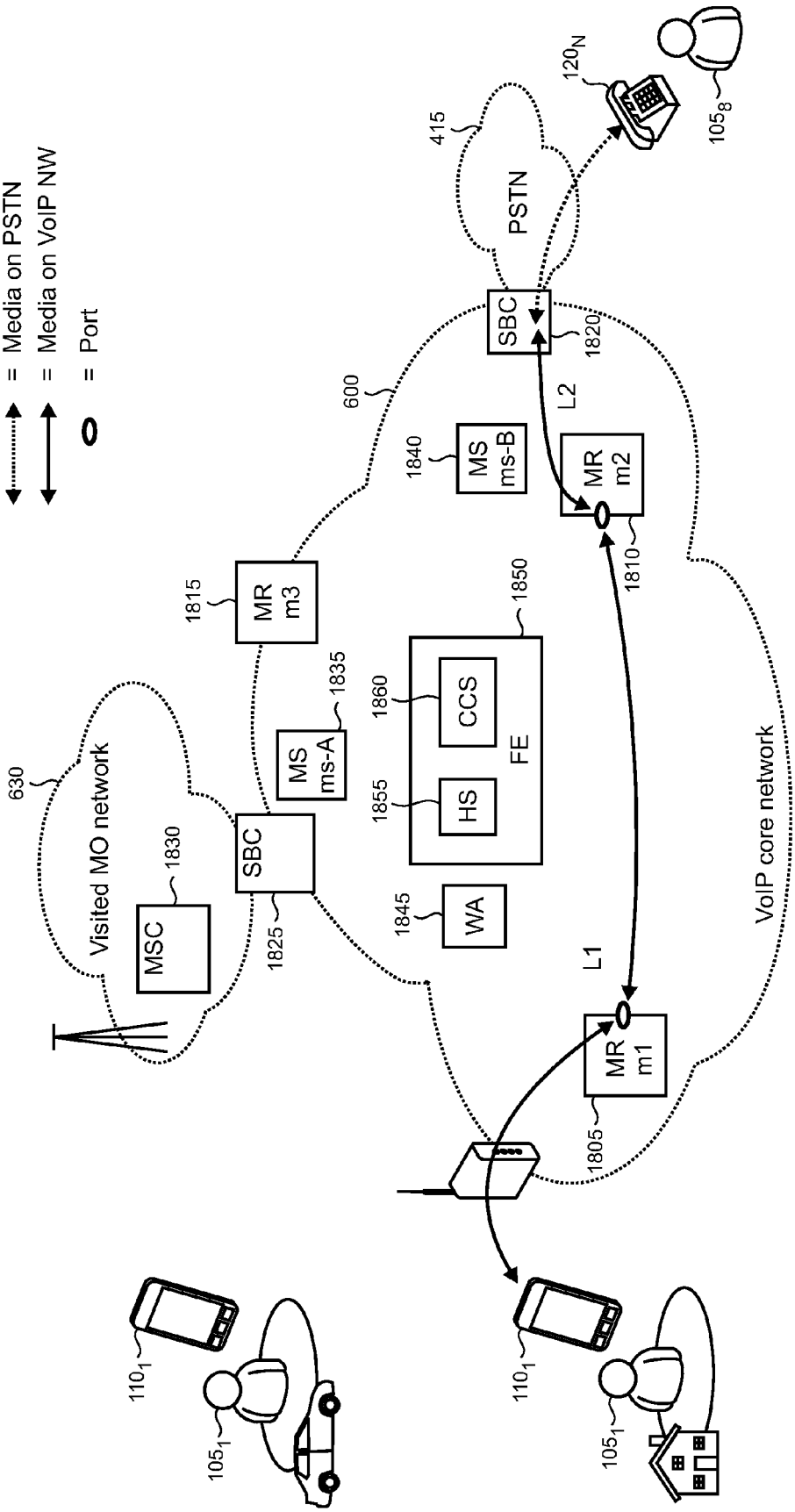
= Media on PSTN
= Media on VoIP NW
= Port
Visited MO network
630
MSC
1830
SBC
1825
MS
ms-A
1835
MR
m3
1815
600
MS
ms-B
1840
SBC
1820
PSTN
415
120_N
105_8
MR
m2
1810
L2
FE
1850
CCS
1860
HS
1855
WA
1845
L1
MR
m1
1805
VoIP core network
110_1
105_1
110_1
105_1

FIG 18

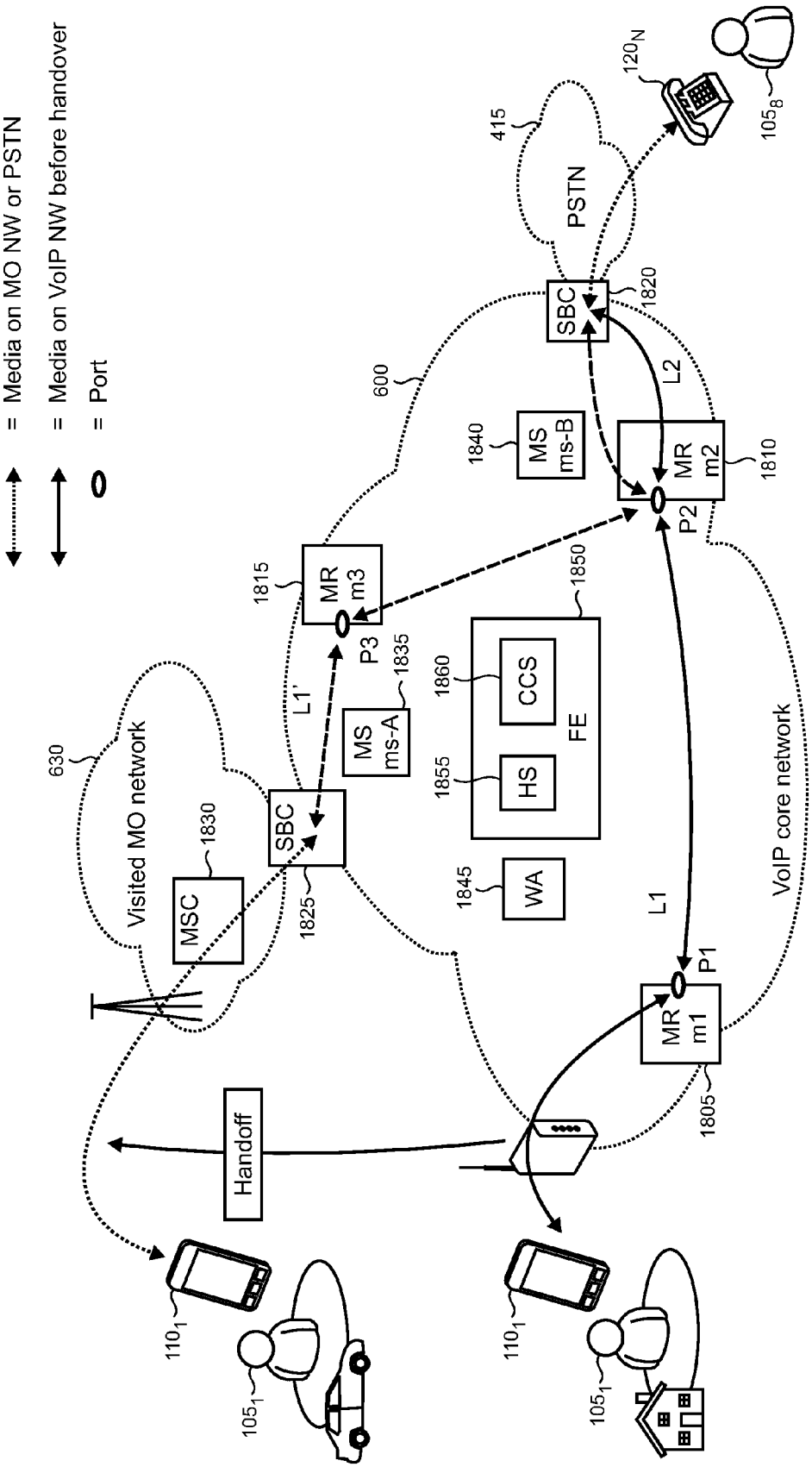
= Media on MO NW or PSTN
= Media on VoIP NW before handover
= Port
Visited MO network
630
MSC
1830
SBC
1825
L1'
MR m3
1815
P3
MS ms-A
1835
600
SBC
1820
PSTN
415
120_N
105_8
MS ms-B
1840
MR m2
1810
P2
L2
1850
CCS
1860
HS
1855
FE
WA
1845
L1
MR m1
P1
1805
VoIP core network
Handoff
110_1
105_1
110_1
105_1

FIG 19

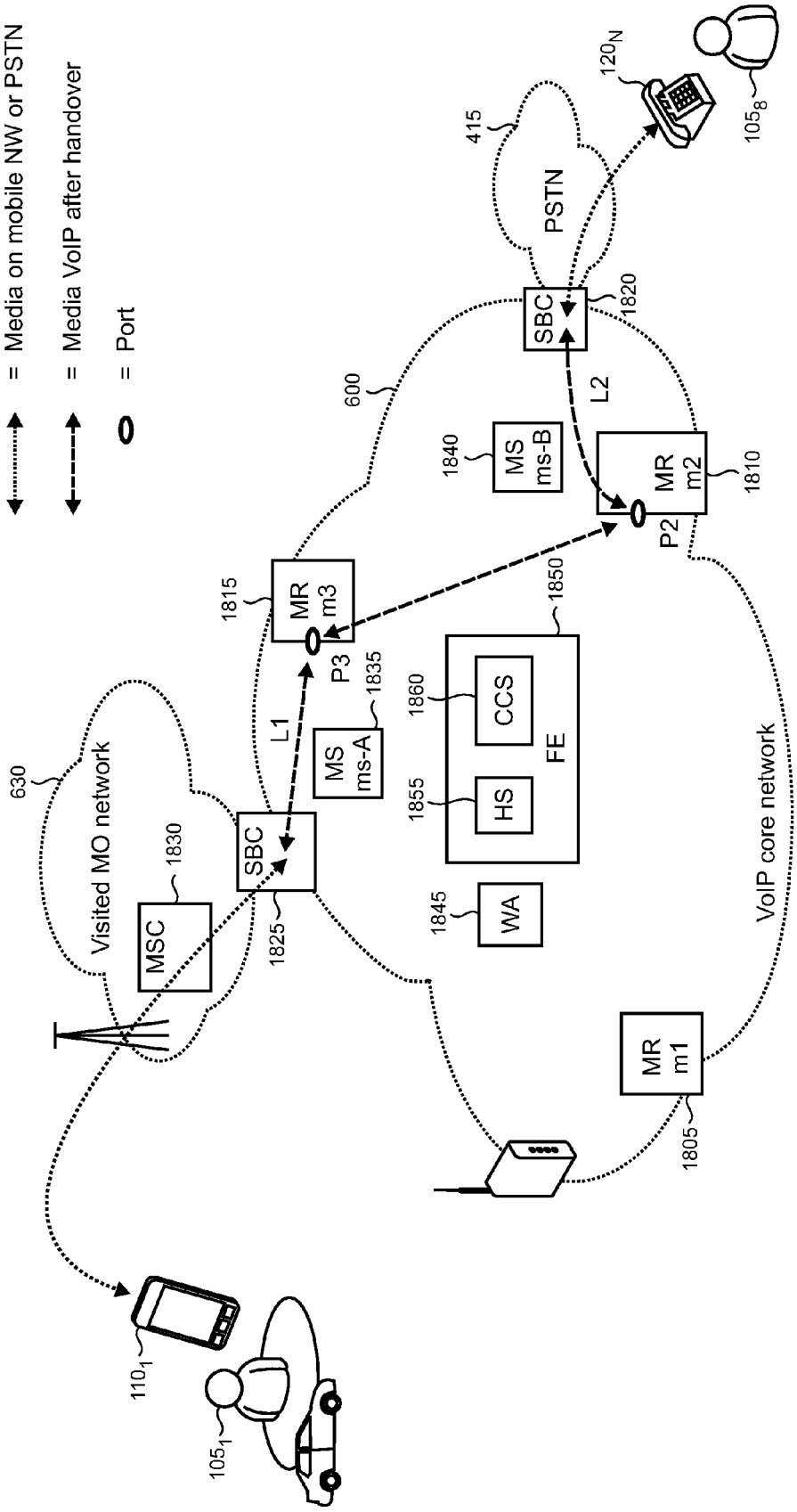
= Media on mobile NW or PSTN
= Media VoIP after handover
= Port
Visited MO network
630
MSC
1830
SBC
1825
L1
MR
m3
1815
P3
MS
ms-A
1835
600
SBC
1820
L2
MS
ms-B
1840
MR
m2
1810
P2
1850
FE
CCS
1860
HS
1855
WA
1845
PSTN
415
120_N
105_8
VoIP core network
MR
m1
1805
110_1
105_1

FIG 20

FIG 21

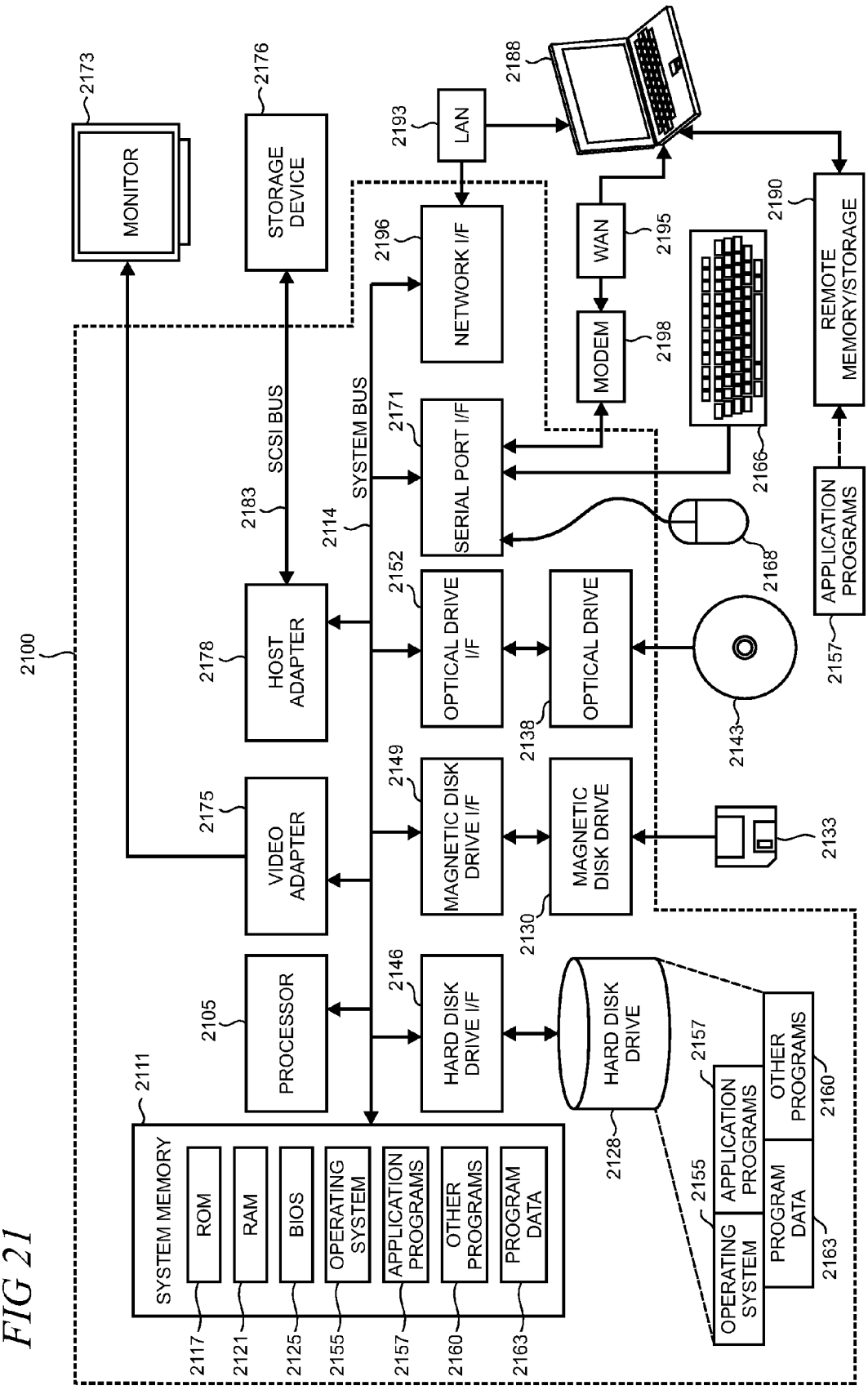
2100
2173
MONITOR
2176
STORAGE DEVICE
2188
2193
LAN
2196
NETWORK I/F
WAN
2195
2190
REMOTE MEMORY/STORAGE
MODEM
2198
2166
2171
SERIAL PORT I/F
SCSI BUS
SYSTEM BUS
2183
2114
2168
APPLICATION PROGRAMS
2157
2178
HOST ADAPTER
2152
OPTICAL DRIVE I/F
OPTICAL DRIVE
2138
2143
2175
VIDEO ADAPTER
2149
MAGNETIC DISK DRIVE I/F
MAGNETIC DISK DRIVE
2133
2130
2105
PROCESSOR
2146
HARD DISK DRIVE I/F
HARD DISK DRIVE
2128
2111
SYSTEM MEMORY
ROM
RAM
BIOS
OPERATING SYSTEM
APPLICATION PROGRAMS
OTHER PROGRAMS
PROGRAM DATA
2117
2121
2125
2155
2157
2160
2163
2157
OPERATING SYSTEM
APPLICATION PROGRAMS
OTHER PROGRAMS
PROGRAM DATA
2155
2160
2163

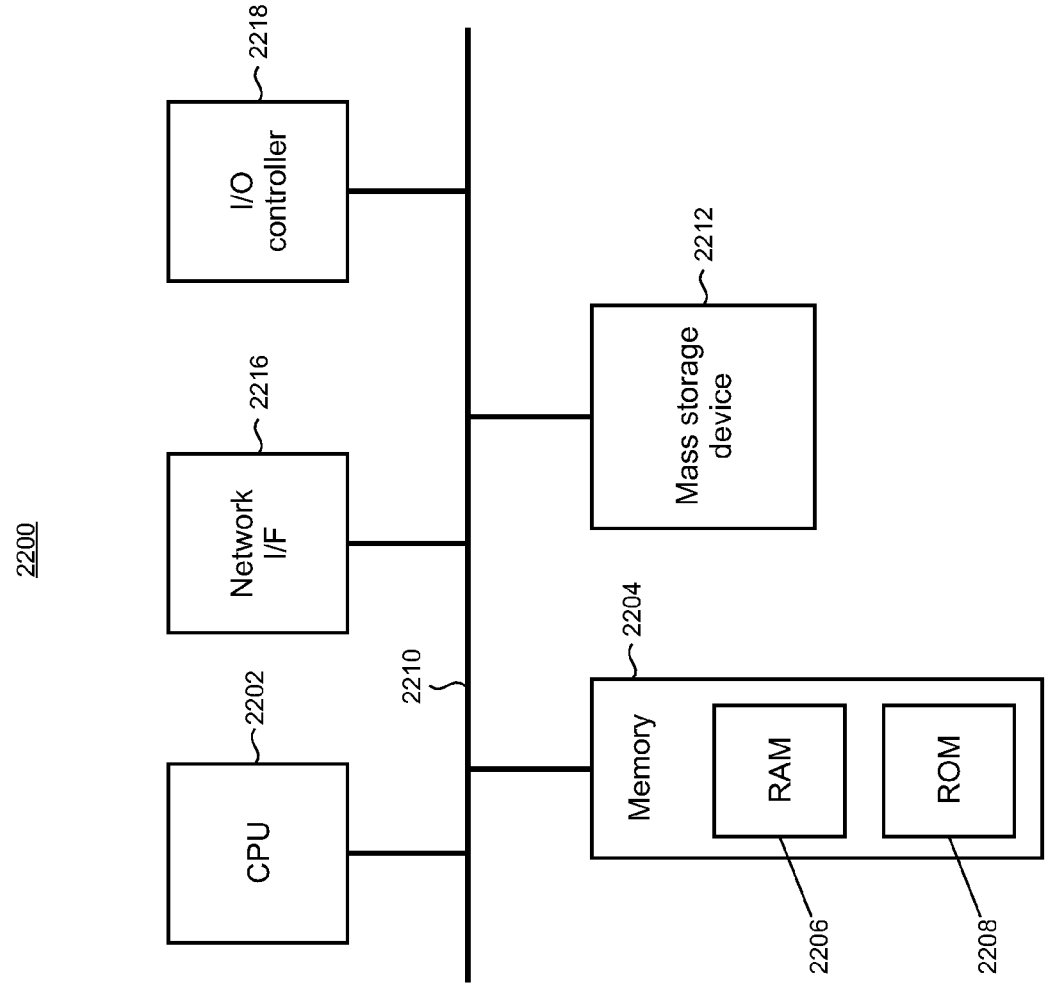
2200
2218
I/O controller
2216
Network I/F
2212
Mass storage device
2210
2204
2202
CPU
Memory
RAM
ROM
2206
2208

FIG 22

FIG 23

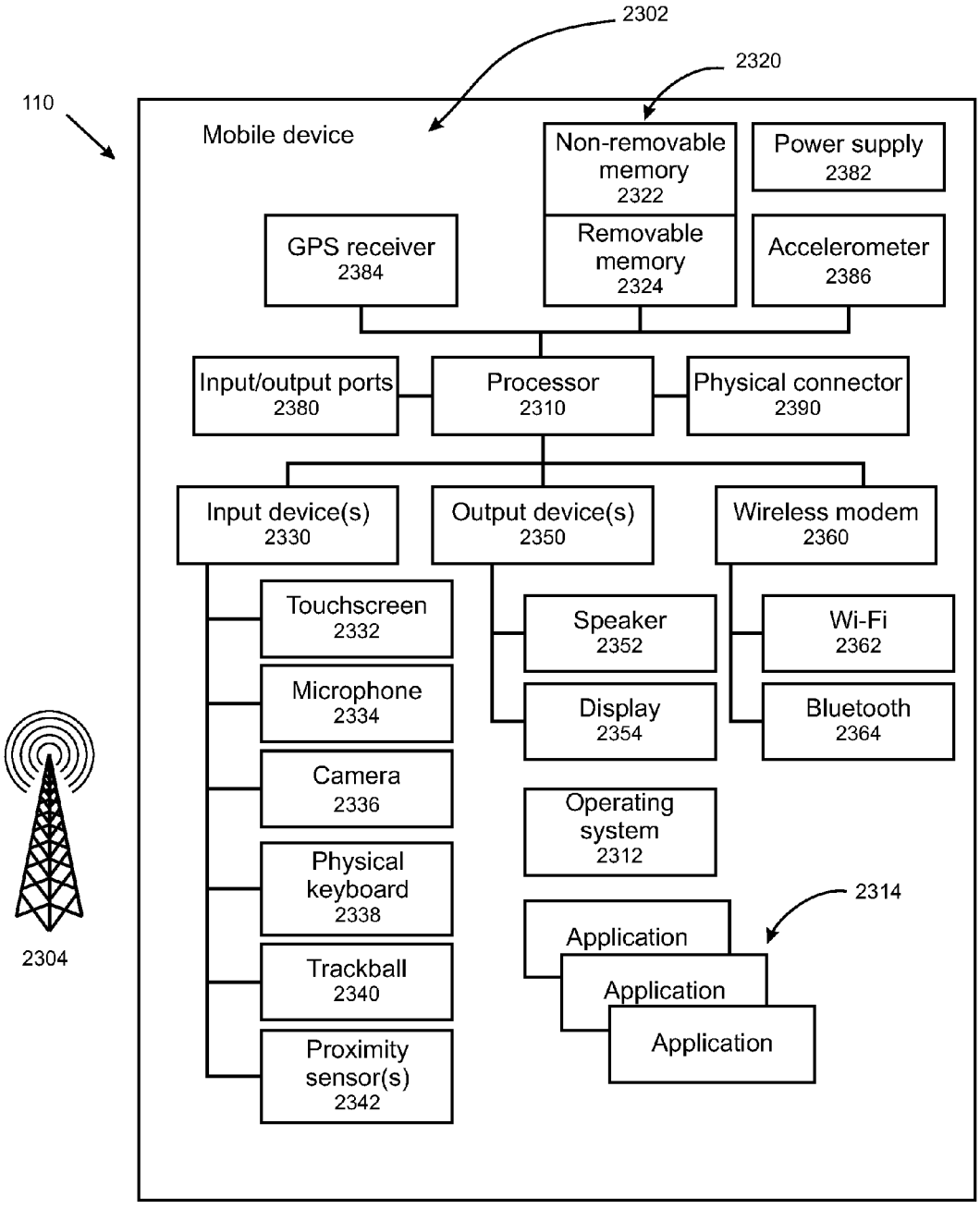
2302
2320
110
Mobile device
Non-removable memory 2322
Power supply 2382
GPS receiver 2384
Removable memory 2324
Accelerometer 2386
Input/output ports 2380
Processor 2310
Physical connector 2390
Input device(s) 2330
Output device(s) 2350
Wireless modem 2360
Touchscreen 2332
Speaker 2352
Wi-Fi 2362
Microphone 2334
Display 2354
Bluetooth 2364
Camera 2336
Operating system 2312
Physical keyboard 2338
2314
Application
Application
Application
Trackball 2340
Proximity sensor(s) 2342
2304

CENTRALIZED ROUTING IN HYBRID NETWORKS

BACKGROUND

Mobile device users have come to expect a consistency of experience, irrespective of the network to which they are connected. For hybrid networks that employ a combination of access network technologies—such as IP (Internet Protocol), cellular including CDMA (Code Division Multiple Access), GSM (Global System for Mobile communications), etc.—there are additional challenges that get in the way of providing a consistent user experience due to factors like access network type, roaming, and the like.

This Background is provided to introduce a brief context for the Summary and Detailed Description that follow. This Background is not intended to be an aid in determining the scope of the claimed subject matter nor be viewed as limiting the claimed subject matter to implementations that solve any or all of the disadvantages or problems presented above.

SUMMARY

A mobile device utilizes a two-stage dialing solution when roaming on a visited mobile operator (MO) network to implement centralized routing so that a home network portion of a hybrid network is inserted into the path of outbound calls to support consistent user experiences across both local and visited networks as well as enhanced calling features such as voice call continuity (VCC). A centralized routing (CR) service exposed by the home network or a VoIP (Voice over Internet Protocol) core network interoperates with a CR client on the mobile device. When a call is initiated to a remote party, the CR client calls into an arbitrary roaming routing number (RRN) that is terminated in the home network. The RRN is either pre-provisioned on the mobile device or obtained from the CR service over a cellular data channel when available. Once the call is connected between the mobile device and home network, the CR client sends a dialing string that includes a destination number of the remote party. The CR service calls the destination number and then bridges the calls to the mobile device and remote party to establish an end-to-end call path between the local and far ends of the call that traverses the home network.

In various illustrative examples, the home network may be configured to forward the centrally routed calls to the VoIP core network so that media, signaling, and call context are anchored in the VoIP core network regardless of the call's point of origin or termination. Authorization, fraud management, and call control are streamlined by anchoring the call in the VoIP core network (using, for example, media relays or conference bridges) and such anchoring enables enhanced feature support such as call treatments (e.g., playing of audible indicators and/or recording and playback services) and VCC to be implemented. For VCC, the conditions under which devices operate on the hybrid network can be continuously monitored so that when a given connection (e.g., Wi-Fi, circuit-switched voice, and packet-switched data connections) in the hybrid network is determined to have been unacceptably degraded, is likely to be interrupted, and/or a more optimal connection is available (e.g., one that is less expensive, more reliable, higher quality, provides additional features such as high-definition ("HD") audio, etc.), a handoff of the call to another connection can be initiated so that call continuity is maintained using the lowest cost connection that provides acceptable call quality.

This Summary is provided to introduce a selection of concepts in a simplified form that are further described below in the Detailed Description. This Summary is not intended to identify key features or essential features of the claimed subject matter, nor is it intended to be used as an aid in determining the scope of the claimed subject matter. Furthermore, the claimed subject matter is not limited to implementations that solve any or all disadvantages noted in any part of this disclosure. It will be appreciated that the above-described subject matter may be implemented as a computer-controlled apparatus, a computer process, a computing system, or as an article of manufacture such as one or more computer-readable storage media. These and various other features will be apparent from a reading of the following Detailed Description and a review of the associated drawings.

DESCRIPTION OF THE DRAWINGS

FIG. **1** shows an illustrative scenario in which a mobile device can connect to local and roaming mobile operator (MO) networks;

FIG. **2** shows an illustrative telecommunications environment in which mobile devices having telephony capabilities communicate over a hybrid network;

FIG. **3** shows an illustrative example of connection types over which a particular mobile device may access a hybrid network;

FIG. **4** shows an illustrative example in which a call is carried over multiple types of networks;

FIG. **5** shows an illustrative example in which a call is handed off between two different networks;

FIG. **6** shows network elements in a home network that can expose a centralized routing (CR) service that interoperates with a CR client on a mobile device;

FIG. **7** shows an illustrative layered architecture used on a mobile device that may be used to implement various aspects of the present centralized routing in hybrid networks;

FIG. **8** shows an overview of a first illustrative implementation of centralized routing in hybrid networks;

FIG. **9** is a flowchart of an illustrative method **900** describing actions performed and associated call flows for the first illustrative implementation of centralized routing in hybrid networks;

FIG. **10** shows an overview of a second illustrative implementation of centralized routing in hybrid networks;

FIG. **11** is a flowchart of an illustrative method describing actions performed and associated call flows for the second illustrative implementation of centralized routing in hybrid networks;

FIG. **12** shows an overview of a third illustrative implementation of centralized routing in hybrid networks;

FIG. **13** is a flowchart of an illustrative method describing actions performed and associated call flows for the third illustrative implementation of centralized routing in hybrid networks;

FIGS. **14** and **15** show illustrative examples of dialing strings;

FIG. **16** shows an illustrative taxonomy for a voice call continuity (VCC) identifier;

FIG. **17** shows an illustrative VCC client;

FIG. **18** shows an illustrative initial state of a hybrid network topology for a call between a mobile phone on a VoIP connection and a device on a public switched telephone network (PSTN);

FIG. **19** shows an illustrative intermediate state of a hybrid network topology for a call in which a VCC handoff is underway;

FIG. **20** shows an illustrative final state of a hybrid network topology for a call in which a VCC handoff is completed;

FIG. **21** is a simplified block diagram of an illustrative computer system such as a personal computer (PC) that may be used in part to implement the present centralized routing in hybrid networks;

FIG. **22** shows a block diagram of an illustrative device that may be used in part to implement the present centralized routing in hybrid networks; and

FIG. **23** is a block diagram of an illustrative mobile device.

Like reference numerals indicate like elements in the drawings. Elements are not drawn to scale unless otherwise indicated.

DETAILED DESCRIPTION

Mobile telecommunications networks are quickly evolving to include combinations of network types and access technologies that are configured in what are termed here as "hybrid networks." As described below in more detail, hybrid networks typically employ network portions that are controlled and managed by different entities and/or service providers. Hybrid networks can generally provide feature-rich and robust services to users of mobile equipment and devices across a wide variety of usage environments and scenarios and often at price points that are very attractive to both consumers and enterprises. However, providing consistent user experiences across the spectrum of interactions over hybrid networks is a design goal that is often difficult to achieve because of an inability in getting a core portion of the hybrid network (referred to as a "home" network) inserted in the call path of the calls traversing the network. That is, when a mobile device is roaming, the visited mobile operator (MO) implements what is called a local breakout (LBO) in which calls originated on the device are handled by the MO network directly without routing the call through the home network. Such lack of centralized call routing can make it more difficult, in some cases, to effectively deal with authorization, fraud management, and call control, and provide full feature support with a consistent user experience.

Turning now to the drawings, FIG. **1** shows an illustrative scenario in which a mobile device can connect to local and roaming MO networks. Here, a user $\mathbf{105}_1$ has a mobile device $\mathbf{110}_1$ that employs a local MO network **115** that comprises a radio access network and a core network to make voice calls and send texts to other devices **110**, and access data and other resources on the web, as representatively supplied by web resource provider **120**. The user **105** generally has a service agreement with the local MO **115** that covers mobile network usage when the mobile device **110** is within the MO's service area such as a domestic location and/or a location that is relatively local. Thus, for example, the user may have a subscription that provides a certain number of call minutes and a certain amount of data access per month with the local MO network **115**.

When a user **105** and mobile device **110** move outside the local service area of the local MO network, the device can roam on a visited MO network **140** that provides service when the mobile device is in its coverage area, for example, such as an international location and/or a location that is relatively remote from the user's local area of coverage. Typically, the local and visited MOs have service agreements in place so that the user's roaming usage can be tracked and billed as appropriate. Both the local MO network **115** and visited MO network **140** can include various backend connections to other networks of different types including the Internet **125** and a public switched telephone network (PSTN) **130** that is operatively coupled to conventional telephony equipment **135** or to other equipment that uses a landline (not shown). Other backend networks (not shown in FIG. **1**) could include VPN (virtual private networks), enterprise networks, PBX (private branch exchange) networks, and the like.

In this particular example, both the local and visited MO networks use CDMA (Code Division Multiple Access) radio technology. However, it is emphasized that CDMA network types are intended to be illustrative and that the present centralized routing in hybrid networks is not limited to use with any specific network type. Conventional GSM/UMTS (Global System for Mobile communications/Universal Mobile Telecommunications System) networks can address issues with centralized routing using intelligent network (IN) protocols and similar methodologies to allow a home network to influence the signaling path of a given call when the visited network supports the same protocols. By comparison, CDMA networks typically do not enable IN services to be invoked and do not have any mechanisms for the home network to be inserted into either the signal or audio call path for roaming subscribers.

The present centralized routing methodologies address issues associated with the lack of home network influence on calls in the context of hybrid networks. The home portion of a hybrid network is inserted into the call path of all outgoing calls without needing the visited MO network to support any IN protocols or be modified in any way. By routing calls through the home network, device authorization and fraud detection are enhanced and a full set of features such as voice call continuity (described below) are supported while providing a consistent user experience in which the user can utilize the same rich feature set in the same manner when accessing the user's home/local network or when roaming. A discussion of hybrid networks is now presented.

FIG. **2** shows an illustrative telecommunications environment **200** in which various users **105** employ respective devices **110** that communicate over a hybrid network **215**. The devices **110** provide voice telephony capabilities and typically support data-consuming applications such as Internet browsing and multimedia (e.g., music, video, etc.) consumption in addition to various other features. The devices **110** may include, for example, user equipment, mobile phones, cell phones, and smartphones which users often employ to make and receive voice and/or multimedia calls, use applications and access services that employ data, browse the World Wide Web, and the like. However, alternative types of electronic devices are also envisioned to be usable within the telecommunications environment **200** so long as they are configured with telephony capabilities and can connect to the hybrid network **215**, as described in more detail below. Such alternative devices variously include handheld computing devices, PDAs (personal digital assistants), portable media players, tablet devices, phablet devices (i.e., combination smartphone/tablet devices), wearable computers, navigation devices such as GPS (Global Positioning System) systems, laptop PCs (personal computers), desktop computers, multimedia consoles, gaming sys-

tems, or the like. In the discussion that follows, the use of the term "mobile device" is intended to cover all devices that are configured with telephony capabilities and are capable of wirelessly connecting to the hybrid network **215**.

Other types of telephony equipment may also be present in the telecommunications environment **200** such as conventional desktop phones **120** which are operatively coupled to a PSTN. Other examples may include equipment that connects to the PSTN using PBXs and equipment coupled to call services that are accessed using telephone numbers. This other telephony equipment may still be utilized in various scenarios involving call handoff and/or centralized routing. For example, a mobile phone **110** may make or receive a call to a desktop phone **120** and employ voice call continuity (as described in more detail below) as the prevailing connection conditions change such as when the mobile device user moves from a car to home during a call. The desktop phone **120** could also be used to place a call to a mobile device and leave a voicemail message if the mobile device user does not answer.

The hybrid network **215** comprises several networks **1**, **2** . . . N, identified in FIG. **2** by reference numerals **225**, **230**, and **235**, respectively. Typically, the various networks will be accessed using different types of wireless connections. For example, as shown in FIG. **3**, the connection types may illustratively include Wi-Fi calling **305** (i.e., Wi-Fi voice), Wi-Fi data **310**, cellular calling **315** (i.e., circuit-switched voice), and cellular data **320** (i.e., packet-switched data). Thus, the networks in the hybrid network **215** may include a VoIP network and a mobile operator (MO) network which typically includes an access network portion and a core network portion that provides for switching, routing, transport, and other functionalities. A PSTN wireline network may also be included as part of the hybrid network in some cases, as discussed in more detail below.

Each mobile device **110** will typically have a prearranged association with one or more of the networks underlying the hybrid network **215**. For example as discussed above, a user **105** will typically be a subscriber to a cellular service provided by an MO so that the user's mobile device **110** can access a given cellular network as valid and authenticated user equipment. Similarly, the mobile device **110** may include functionality and credentials to access a Wi-Fi network. The mobile devices **110** may also interoperate with a VoIP network and be capable of providing voice call continuity (VCC) across different connection types according to a prearranged association. Such mobile devices are considered "VCC-equipped" and can access the hybrid network **215** over the different types of connections.

In some situations, a mobile device may be placed in a dock or cradle that is coupled to the PSTN and thus could employ a wireline connection for a call which is often the least expensive network connection. Typically, the mobile devices **110** use the less expensive Wi-Fi connection whenever it is available and capable of providing a reasonable level of call quality. When Wi-Fi is not available or is inadequate for the voice call, the call may be made over one of the other available network connection options after determining that the selected connection will result in acceptable call quality. Cellular voice is typically the costliest connection alternative but also the most ubiquitous and so it is used to ensure that the user has access to calling services from as wide an area as possible. In the description that follows, the mobile devices **110** are considered to be VCC equipped unless otherwise indicated.

A characteristic of the hybrid network **215** is that two or more of the underlying networks (e.g., networks **225**, **230**, **235**) are considered loosely coupled. That is, in one illustrative example, the VoIP network and the MO network are typically operated independently so that one network cannot exercise significant or substantial control over the operation of the other. However, as shown in FIG. **4**, the underlying networks, while loosely coupled, are still interoperable so that calls can traverse an MO network **405**, VoIP network **410**, and PSTN **415**. Such interoperability is commonly facilitated using gateways, as representatively indicated by reference numeral **420**. It is becoming increasingly common for significant portions of a given call to be transported over the VoIP network **410** because such networks can often provide very high quality transportation at the lowest cost to the network operators. In such cases, the MO network **405** and the PSTN network **415** essentially function as access networks to the mobile device at each end of the call while the VoIP network **410** performs the bulk of the routing and transport for the call. Other access networks may also be utilized in order for a call to reach the VoIP network **410** including both cellular circuit-switched and packet-switched networks, and Wi-Fi access points (APs) such as public Wi-Fi "hotspots" and those provided by home and office Internet Service Providers (ISPs).

While such hybridization can provide cost-effective and high quality transport, the loose coupling has traditionally presented difficulties for VCC. VCC functionality is defined here as the maintenance of ongoing voice calls for a device that is capable of placing and receiving voice calls in the face of changes in prevailing connection conditions perhaps due to user mobility or other environmental factors. For example, the connection currently being used, such as Wi-Fi under IEEE (Institute of Electrical and Electronic Engineers) 802.11 could start demonstrating worsening radio signal and/or network congestion conditions, or the user could move to a location where the Wi-Fi connection does not work at all. In addition, other connection options may become available that are lower cost, or provide a better user experience, and therefore either or both the user and network operator may wish to utilize such connection options.

For example, as shown in FIG. **5**, a user **105** may be in the car when initiating a call over the MO network **405**. When the user **105** returns home, another call leg is then created over a selected connection which in this example is the home Wi-Fi connection via a Wi-Fi AP **505** to the VoIP network **410**. The selected connection is associated with the call, preferably while the original call is still ongoing (in what is termed a "make-before-break" handoff). When the new call leg is stable, the original call leg is removed from the call and the handoff **510** to the new connection is complete.

If the handoff is initiated so that both the original and newly selected connections are operative simultaneously then there will be an intermediate state in which both call legs will be running in parallel. Media flows can be directed to and from the mobile device over these parallel connections, until one of the two flows is terminated. Such intermediate state enables the call to be maintained in an uninterrupted manner as perceived by the parties on both ends of the call. During the intermediate state, the mobile device can typically choose to connect to one of the two flows as it deems appropriate. An illustrative example of VCC is provided in more detail below in the text accompanying FIGS. **16-20**.

The hybrid network described above may be configured to support the present centralized routing. As shown in FIG. **6**, network elements **605** are instantiated in a VoIP core network **600** that interoperates, in this example, with a home network **610**. In alternative implementations, the function-

alities provided by each of the home and VoIP core networks can be combined in a single network or allocated differently between the home and VoIP core network from what is shown and described herein. In this illustrative example, as described below in more detail, using the two-stage dialing approach a CR client on a mobile device calls into the home network which can then function as an access network for the VoIP core network by forwarding the call from the client to the VoIP core network. In alternative implementations, the CR client may be configured to call directly into the VoIP core network.

The network elements **605** can be configured and utilized to support various features in the hybrid network including for example, exposing a centralized routing (CR) service **615** that interacts with a CR client **620** to implement insertion of the home network **610** in the call path **625** as the call traverses the hybrid network between the local and far ends. In this illustrative example, the hybrid network includes a visited MO network **630**, the VoIP core network **600**, the home network **610**, and another network **635** that may be utilized to effectuate the connection to the far end such as a cellular network, other VoIP network, PSTN, etc. In some cases, the home network **610** and/or the VoIP core network **600** may directly interact with the remote party at the far end of the call without using the other network **635** as an intermediary (it is noted that the term "remote party" as used herein can refer to either a user or a telephony device depending on context).

As shown in FIG. **7**, a mobile device **110** can support a layered architecture **700** of functional components. The architecture **700** is typically implemented in software, although combinations of software, firmware, and/or hardware may also be utilized in some cases. The architecture **700** is arranged in layers and includes an application layer **705**, an OS (operating system) layer **710**, and a hardware layer **715**. The hardware layer **715** provides an abstraction of the various hardware used by the mobile device **110** (e.g., input and output devices, networking and radio hardware, etc.) to the layers above it.

The application layer **505** in this illustrative example supports various applications **720** as well as the CR client **620**. The applications **720** and CR client **620** are often implemented using locally executing code. However in some cases these applications may rely on services and/or remote code execution provided by remote servers or other computing platforms such as those supported by an external service provider or other cloud-based resources. While the CR client **620** is shown here as a component that is instantiated in the application layer **705**, it will be appreciated that the functionality provided by the application may be implemented, in whole or part, using components that are supported in either the OS or hardware layers. As described in more detail below, the CR client **620** utilizes a roaming routing number (RRN) **725** and a dialing string **730** which may be locally stored on the mobile device **110** or stored in whole or part remotely, for example, using a cloud-based store or service.

The CR client **620** is configured to interact with the CR service **615** as indicated by arrow **735**. In some cases, the CR client **620** will utilize other components (not shown) that are instantiated in the architecture **700** in order to implement such interactions and/or the other components may interact with the CR service directly as needed to implement the various features and functions described herein.

The present centralized routing is typically implemented so that outbound calls from a given mobile device will be routed through the CR service in the home network instead of allowing a roaming provider (e.g., the visited MO network) to locally break out the call and complete it directly. This may be accomplished by having the mobile device **110** call the RRN—a telephone number that terminates in the home network—to connect the caller to the destination number of the called party on the far end. Three alternative illustrative implementations are described next.

In the first illustrative implementation of centralized call routing shown in an overview in FIG. **8**, a two-stage approach is used in which the CR client **620** calls into the pre-provisioned RRN over a circuit switched cellular calling connection so that the MO (e.g., a visited MO network) routes the call into the home network **610** which forwards the call to the VoIP core network **600**. Once the call is connected, the CR client **620** signals the CR service **615** using a dialing string in order to provide the desired destination number (i.e., the telephone number of the called party). The CR service calls the destination number and then bridges the inbound and outbound calls to create an end-to-end connection between the local and far ends.

FIG. **9** is a flowchart of an illustrative method **900** describing actions performed and associated call flows for the first illustrative implementation in more detail. Unless specifically stated, the methods or steps shown in the flowcharts and described in the accompanying text are not constrained to a particular order or sequence. In addition, some of the methods or steps thereof can occur or be performed concurrently and not all the methods or steps have to be performed in a given implementation depending on the requirements of such implementation and some methods or steps may be optionally utilized.

In step **905**, the user **105** of the mobile device **110** initiates a call having a desired destination number over a visited MO network. Such call initiation may be performed in a conventional manner. For example, the user may use a keypad supported on the device to input the destination number, pick a number from a list of stored contacts, select a phone number included as a link in an email, text, or webpage use a voice command to input or select a number, etc. At decision block **910**, if the visited MO network is configured so that it routes outgoing calls to the home network, then the call can be handled conventionally (that is, without utilizing any of the present centralized routing methodologies), in step **915**. For example, the visited MO might route calls to the home network because of a prearranged agreement with the home network or other form of special connectivity.

If the visited MO network does not already route outgoing calls to the home network, then the method continues in step **920** where, in some cases, the CR client **620** can implement various call treatments such as recording and/or playing audio as the call is being set-up. For example, the CR client **620** can play audio including tones, white noise, voice, music, and/or "comfort sounds" on an audio endpoint on the mobile device **110** which may include the device's internal speaker, a wired or wireless headset/earpiece, external speaker/device, and the like. Playing audio on the device during the time it takes the call to being connected can be beneficial in some situations. For example, it may be expected that the two-stage approach can generally take more time to make a connection than the conventional LBO implemented by a visited MO. By providing audible feedback to the user that indicates that something is happening, the user knows not to hang up before the call is connected. The audio can include background white noise that is similar to what a user normally faintly hears in the background when the call is active but the other party is not speaking. Comfort sounds can have a similar effect as background

white noise and may include sounds that are commonly soothing and relaxing to hear such as the sound of ocean waves, rainfall, and the like.

The CR client **620** can also be configured to play tones of various timbres, duration, volume, and pitch may also be played alone, together, and/or in sequences through the audio endpoint. The particular tones utilized can vary by implementation. Generally, the tones are designed to convey the impression to the user that call connection is in progress, something is going on, and the user should not hang up on the call. The meaning of the tones may be expected to become readily learned and appreciated as a desirable feature of the mobile device **110**. For example, utilization of the tones helps to reinforce the user's appreciation that the user's familiar home network is in the call path so that calls are provided with a full feature set (such as VCC) and often at a lower cost than conventional roaming. Thus, hearing the tones becomes an accepted part of the user experience supported on the mobile device **110** and may also be used to support brand awareness and support of services provided by the home network **610**.

Mid-call treatments such as audible indications and recording/playback services may also be performed when VCC is implemented during handoffs to notify either or both parties that a call transition is ongoing. These mid-call treatments serve to keep the users from terminating the call in case there is a short period of silence in the call or other perceived interruption during the handoff which might lead a user to believe that the call has been dropped or disconnected. The audible indications may comprise one or more tones, recorded or synthesized voice, comfort sounds, music, or other form of audible message that can be used to notify the user at the far end of the call (i.e., the end of the call that is not presently undergoing a handover) that a call transition is ongoing. In the case of a mid-call interruption, another treatment could insert an audible indicator requesting that the user at the far end stay on the call (e.g., "hold the line") while the call is being adjusted.

The recording and playback services of the mid-call treatments may include capturing portions of the conversations in a call, with the participant's permission, for later playback under certain conditions. In one illustrative example using a multi-party call scenario, parties to the call may be offered a replay of any conversation that may have been missed in the event of a call drop or other interruption that may occur during a handoff. The replay could occur at either normal speed or at a faster than normal speed so that a party could get caught up quickly and rejoin the conversation.

In step **925**, the CR client **620** calls into the pre-provisioned RRN over the cellular calling connection (i.e., the circuit-switched voice connection). The pre-provisioning can be implemented in various ways including installation at the mobile device factory or retailer, downloaded as an update to the mobile device's CR client, operating system, applications, or the like. By pre-provisioning the RRN, the CR client **620** can reach the home network **610** without needing to obtain the RRN using an additional step, which can be beneficial in some applications. In step **930**, the visited MO network routes the call using the RRN to the CR service **615** in the VoIP core network **600** over a circuit-switched cellular calling (i.e., voice) connection and the call is connected between the mobile device **110** and the CR service **615** in step **935**.

Once the call is connected, in step **940**, the CR client **620** signals the CR service **615** with the destination number. As described in more detail below in the text accompanying FIGS. **14** and **15**, such signaling can be implemented, for example, by sending a dialing string over the cellular calling connection using audio-based DTMF (Dual-Tone Multi-Frequency) signaling. In addition to the destination number, the dialing string can include the source number (i.e., the number of the calling party) in some cases as well as other data that can enhance security and error detection and correction. In an alternative implementation, the destination number can be sent over a cellular data connection to the CR service when such connection is available.

In step **945**, the CR service **615** extracts the destination number from the signaling sent by the CR client **620** and calls the destination number to reach the remote party in step **950**. The outbound call can traverse various other networks and network types as needed to connect to the remote party.

In some cases, the CR service **615** will receive a signal from the far end that indicates ringing or busy status in step **955**. For example, a PSTN can provide such signaling in the audio of the call while a VoIP network can provide such signaling using, for example, SIP (Session Initiation Protocol) messages. The CR service **615** can relay the status signaling from the far end to the CR client **620** on the mobile device using, for example, audio tones or other in-band signaling (in which such audio signaling implemented between the CR client and CR service may typically be kept muted from the device user). In response, the CR client **620** may be configured to play a ringing or busy signal on the device's audio endpoint in step **960** and discontinue playing other audio as described in step **920** in cases where such audio is utilized.

If the outbound call to the remote party does not get a busy signal, then in step **965** the CR service **615** can bridge the incoming call from the mobile device and the outbound call to the remote party to establish an end-to-end call path between the local and far ends (i.e., the calling and called parties) that traverses the home network **610**. Once the call is connected, the user can participate in an experience with the far end, such as engaging in a conversation with the remote party, leaving a voicemail if the remote party is unavailable, etc., in step **970**.

FIG. **10** shows an overview of the second illustrative implementation of centralized call routing. This implementation is similar to the first shown in FIGS. **8** and **9**, but instead of calling into a pre-provisioned RRN, the CR client **620** is configured to perform a make-call request to the CR service **615** over a cellular data connection when it is available. In response to the make-call request, the CR service **615** sends the RRN over the data connection to the CR client **620**.

Once the CR client **620** receives the RRN from the CR service **615** over the cellular data connection, the rest of the call connection process is similar to that in the first implementation. That is, the CR client **620** calls into the RRN over a circuit switched cellular calling connection so that the MO (e.g., a visited MO network) routes the call into the home network **610**. Once the call is connected, the CR client **620** signals the CR service **615** using a dialing string in order to provide the desired destination number. The CR service calls the destination number and then bridges the inbound and outbound calls to create an end-to-end connection between the local and far ends.

FIG. **11** is a flowchart of an illustrative method **1100** describing actions performed and associated call flows for the second illustrative implementation in more detail. In step **1105**, the user **105** of the mobile device **110** initiates a call having a desired destination number. At decision block **1110**, if the visited MO network is configured so that it routes

outgoing calls to the home network, then the call can be handled conventionally (that is, without utilizing any of the present centralized routing methodologies), in step **1115**.

If the visited MO network does not already route outgoing calls to the home network, then in some cases, in step **1120**, the CR client **620** can play audio including tones, white noise, voice, and/or "comfort sounds" on an audio endpoint on the mobile device **110** during call set-up or mid-call.

In step **1125**, the CR client **620** sends a make-call request to the CR service **615** over an available cellular data connection. "Available" as used in the present detailed description can mean either or both the presence of the cellular data connection from a technical perspective as well as being able to utilize the cellular data connection under policies and terms that are acceptable from a commercial or business perspective. For example, when the user and mobile device are roaming, a cellular data connection might be present and technically enabled for use, but the costs to communicate over the connection could be high enough to make the overall calling experience less than optimal. In such cases, the first implementation may be utilized more cost effectively.

In step **1130**, the CR service **615** responds to the make-call request from the CR client **620** with the RRN over the cellular data connection. The CR client **620** calls into the RRN supplied from CR service **615** over the cellular calling connection in step **1135**. The remaining steps in the method **1100**, steps **1140** to **1180**, are substantially the same as steps **930** to **970** in the flowchart **900** shown in FIG. **9**.

FIG. **12** shows an overview of the third illustrative implementation of centralized call routing. This implementation is similar to the second implementation shown in FIGS. **10** and **11** in which the CR client **620** is configured to perform a make-call request to the CR service **615** over a cellular data connection when it is available. However, rather than send the RRN back to the CR client **620**, in response to the make-call request, the CR service **615** places an outbound call to the mobile device **110** over a cellular calling connection. In this illustrative example, the make-call request over the cellular data connection can include the destination number so that the CR service **615** can place another outbound call to the remote party at the far end and then bridge both outbound calls to create an end-to-end connection between the local and far ends. Alternatively, instead of sending the destination number in the make-call request, the CR client **620** can send a dialing string to the CR service **615** that includes the destination number (among other information), as in the first and second implementations of centralized call routing.

FIG. **13** is a flowchart of an illustrative method **1300** describing actions performed and associated call flows for the third illustrative implementation in more detail. As in the other implementations, in step **1305**, the user **105** of the mobile device **110** initiates a call having a desired destination number. At decision block **1310**, if the visited MO network is configured so that it routes outgoing calls to the home network, then the call can be handled conventionally (that is, without utilizing any of the present centralized routing methodologies), in step **1315**.

If the visited MO network does not already route outgoing calls to the home network, then in some cases, in step **1320**, the CR client **620** can play audio including tones, white noise, voice, music, and/or "comfort sounds" on an audio endpoint on the mobile device **110** during call set-up or mid-call.

In step **1325**, the CR client **620** sends a make-call request to the CR service **615** over an available cellular data connection. In this particular example, the make-call request can include the caller ID (i.e., source number), destination number (as well as other information such as security, error detection, and/or error correction data that would otherwise be included in the dialing string as discussed below). However, in alternative implementations, the CR client **620** can send the destination in a dialing string over a cellular calling connection in the same way as with the first and second implementations.

In step **1330**, in response to the make-call request, the CR service **615** performs a callback to the mobile device **110** using the source number from the caller ID contained in the make-call request. The MO routes the outbound call to the mobile device in step **1335** and the call is connected between the CR service **615** and mobile device **110** in step **1340**. As noted above, in some cases the CR client **620** will signal the CR service with the destination number and other data in a dialing string and the service will extract the destination number from the signaling as respectively shown in steps **1345** and **1350**. As these steps are alternatively utilized they are shown with dashed borders. The remaining steps in the method **1300**, steps **1355** to **1375**, are substantially the same as steps **1160** to **1180** in the flowchart **1100** shown in FIG. **11**.

The CR client **620** can be arranged to apply heuristics, rules, or policies to determine which of the alternative implementations for centralized routing are optimally utilized for a given usage scenario. In some cases the heuristics or rules can take into account connection statistics (e.g., success/failure of connection attempts with different MOs at different locations, time needed to complete a connection with different MOs at different locations, etc.) that are collected over time at the mobile device (typically with notice to the user and user consent). In addition, connection statistics can also be collected from a larger universe of users of the home network. The heuristics, rules, or policies can be periodically downloaded to the CR client **620** from the CR service, for example, to update the mobile device's CR client, operating system, applications, or the like.

FIG. **14** shows an illustrative example of a dialing string **1400** that may be utilized when dialing into an RRN over a cellular calling connection. Once connected, the CR client **620** (FIG. **6**) signals the CR service using the dialing string which is typically transmitted using audible tones. The tones could be generated, for example, using DTMF or TDD/TTY (Telecommunications Device for the Deaf/Teletypewriter) encoding schemes. Other transmission schemes and protocols including, for example, USSD (Unstructured Supplementary Service Data) under GSM may be employed for dialing string transport in situations in which CDMA radio systems are not utilized.

As shown, the dialing string **1400** includes fields for the destination number **1405** and a hash **1410**. The DTMF character set includes numeric digits 0 through 9, letters A, B, C, and D, and characters * (asterisk) and # (hash). In the dialing string **1400**, the letters, B, C, and D are used as delimiters. The destination number **1405** will typically be a string of numeric digits that is routable through a network to the remote party at the far end.

The inclusion of the source number may be necessary if an MO network cannot be trusted to send the calling mobile device's caller ID. In this situation the dialing string **1500** shown in FIG. **15** may be utilized which includes a field for the source number **1515** along with fields for the destination number **1505** and hash **1510**. In the dialing string **1500**, the A, B, C, and D are used as delimiters. The CR service **615** may issue instructions in some cases to the mobile device

110 indicating how the dialing string is to be formed (i.e., whether or not it includes the source number) and how it is to be transmitted.

The hash (indicated by reference numerals **1410** and **1510** respectively in FIGS. **14** and **15**) is a computed value from the source number (when included), destination number, and a shared PIN (personal identification number). The shared PIN is a value known to both the CR service **615** and the mobile device **110** and is used to authenticate the calling party (e.g., user **105**). Although a hashing algorithm is used in the examples shown in FIGS. **14** and **15**, other encoding functions may also be utilized in alternative implementations such as the Luhn checksum algorithm.

The hash typically performs two functions including enhancing security and enhancing signaling transmission reliability. In the case of security enhancement, as the hash is computed using the PIN, it enables the CR service **615** to positively identify the calling party should the caller ID get spoofed somehow. In the case of signaling transmission reliability, the PIN also helps ensure that the DTMF tones are reliably transmitted over the cellular calling connection. If a discrepancy exists in the calculated hash values, then the CR service **615** knows that an error exists and can request the CR client **620** to retransmit the dialing string to thereby correct the dialing string so that an incorrect number is not called.

When transmitting the dialing string the CR client **620** on the mobile device **110** may need to wait until the CR service **615** is ready to receive the dialing string. For example, the CDMA-based MO networks shown in this particular example do not signal the mobile device when a call is connected. Since it does not know when a call is connected, it is not possible for the mobile equipment to positively determine if the dialing string is to be sent and received by the CR service. This may be mitigated in some scenarios in various alternative ways including, for example, pausing for a pre-determined amount of time, retrying on failure, or by waiting for an audible signal, tone, or other audible indicator from the CR service to indicate that it is ready to receive the dialing string from the CR client.

In the case of pausing, the length of the pause can be variable and adaptively controlled according to heuristics, rules, or policies provided by the CR service **615** that can take into account the user's location and the MO network and network type, for example. Thus, the CR service **615** can provide values for pause length to the CR client **620** depending on the user's location, the particular MO network being utilized, network characteristics, error conditions that are experienced, and other context. The pause length values can be adjusted as connection statistics and other data is collected over time. In the case of the indicator, the mobile device listens for a pre-determined indicator and starts transmitting after it is detected. Other examples of adaptability may include adjusting the length of a given DTMF tone and/or the length of time between transmitted tones according to applicable context.

An illustrative VCC example is now presented in more detail in which a call is made between a mobile device on a Wi-Fi connection and a conventional phone on a PSTN. The VoIP core network is arranged to interoperate with special voice call continuity capabilities that are instantiated in VCC-equipped mobile devices **110**. More specifically, each call for a particular mobile device is assigned a VCC identifier upon the call's creation by a call continuity service (CCS) that operates in the core VoIP network **600** (FIG. **6**), as described in more detail below. As shown in the taxonomy **1600** in FIG. **16**, the VCC identifier **1605** may take a variety of forms. For example, it may have the form of a VCC routing number (VCCRN), as indicated by reference numeral **1610** or a VCC resource identifier (VCCRI), as indicated by reference **1615**. The VCCRN and VCCRI are functionally equivalent and differ only in form. The VCCRN may use the format of a telephone number such as an MSISDN (Mobile Station International Subscriber Directory Number) number, while the VCCRI may take the form of a URI (Uniform Resource Identifier), for example an E.164 number under the ITU-T (International Telecommunications Union Telecommunication Standardization Sector). In the discussion that follows the term VCCRN is consistently utilized when referring to the VCC identifier. However, which equivalent form of the identifier is applicable will be apparent from the context of the discussion.

The VCC identifier **1605** is used to associate all the various call legs pertaining to a given call which are created for that mobile phone during the call continuity and handoff procedures. For example, for the purpose of call handoff, when a new mobile phone call leg is generated, the new call leg is associated with the same value of the VCCRN as the original call leg for the mobile phone. The VCCRN is unique for each call to a given mobile phone, which may be simultaneously executing, and also over a guard time interval to ensure uniqueness among the mobile phone's calls. Although the VCCRN can take the form of an MSISDN telephone number, it typically does not need to be routable over the PSTN and thus is not included in the LERG (Local Exchange Routing Guide) or BIRRDS (Business Integrated Routing and Rating Database System) databases. However, in alternative implementations the VCCRN may be included in such databases in scenarios in which the VCCRN is a routable telephone number that is associated with the core VoIP network **600**.

As shown in FIG. **17**, a VCC client **1720** may be instantiated on a VCC-equipped mobile device and utilized to implement VCC functionality. In some cases, the VCC client can be implemented as an application, while in alternative arrangements the VCC client may be incorporated in the OS layer **710** (FIG. **7**) or hardware layer **715**, or its functionality distributed across layers. The VCC client **1720** exposes functionality including for example VCC identifier **1605** discovery during the mobile phone's interaction with the core VoIP network **600**, for example during the call's signaling or upon request when the phone has IP connectivity. The VCC client **1720** may store the VCC identifier **1605** in order to maintain a local call state, as indicated by reference numeral **1725**. The VCC client **1720** may also include functionality and logic to make device-initiated handoff decisions. Handoff decisions typically comprise evaluating a variety of parameters related to the expected call quality for each connection including radio/network and call quality characteristics at the present time and a prediction of the parameters' state in the near future. Traffic and loading conditions may also be evaluated. In addition, other environmental factors such as sensed user-activity state and ambient conditions can also be factored into the evaluation, as well as history of usage patterns for the mobile phone's user and the phone's location. When this evaluation indicates that a handoff should be performed, then the new connection is selected and the handoff process initiated.

The initial state for this illustrative VCC example is shown in the topology in FIG. **18**. It may be assumed that the mobile device **110** has already discovered and stored in its local call state the VCCRN value for the call for which handoff is to be performed. As shown in FIG. **18**, the VoIP core network **600** includes media relays m**1**, m**2**, and m**3**, as

respectively indicated by reference numerals **1805**, **1810**, and **1815**. An SBC server **1820** operates as the gateway to PSTN **415** and an SBC server **1825** operates as a gateway to the visited MO network **630** which includes a mobile switching center (MSC) **1830**. Mediation servers ms-A and ms-B, respectively indicated by reference numerals **1835** and **1840**, are also supported in the VoIP core network **600**.

The VoIP core network **600** also supports a web access (WA) server **1845** and a front end (FE) **1850** that includes a home server (HS) **1855** and the CCS **1860**. The WA **1845** functions as a signaling plane server with which the mobile device **110** carries out all signaling interaction with the VoIP core network **600**. The WA **1845** also acts as an agent on behalf of the mobile device in interactions with the other signaling plane elements of the VoIP core network **600**. The FE **1850** provides call handling in the signaling plane including various functions such as call routing. The HS **1855** provides signaling proxy in the VoIP core network **600**. As noted above, the CCS **1860** is responsible for maintaining the call state in the VoIP core network **600** and generates the related parameters including the VCCRN.

At some point in time, the VCC client **1720** (FIG. **17**) on the mobile device **110** determines that conditions are such that a handoff to the cellular CS connection is warranted. For example, the user **105** moves from home to a car. The handoff is performed in three stages (in which the hybrid network may be viewed as being in a particular state—i.e., initial state, intermediate state, and final state—in each corresponding stage). In particular, a new call leg is created in the initial stage, parallel media paths are created in an intermediate stage, and the handoff is completed in the final stage.

As shown in FIG. **19**, during the new call leg, the mobile device **110** places a call over its CS connection using the two-stage dialing solution described above in order to ensure that the call traversing the visited MO network over the CS connection is anchored in the VoIP core network **600**. Once the call is anchored, the mobile device can provide signaling parameters including, for example, Caller ID and VCCRN. The MSC **1830** in the visited MO network **630** forwards the call signaling to the SBC **1825** which, in turn, sends the call signaling to the mediation server ms-A **1835**. As noted above, calls to and from the VCC-equipped mobile devices that are associated with the VoIP core network **600** are routed to that network regardless of the point of origin or termination of the call. The mediation server ms-A **1835** allocates a port P**3** on a nearby media relay m**3** **1815** and continues with the call signaling. The VoIP core network **600** then implements voice call continuity using a saved call state from the stored VCCRN to relate the new call leg to the original call. This enables the new call leg L**1'** to be incorporated into the original call via the media relay m**3** **1815** on port P**3** to the port P**2** on media relay m**2** **1810**.

During the intermediate stage of call handoff, the additional parallel call leg L**1'** is created from the mobile device **110** to the media relay m**3** **1815** over the new connection. Accordingly, for some time interval, there will be two parallel call legs, L**1** and L**1'** one on each of the CS and VoIP/Wi-Fi connections between the mobile phone **110** and the respective media relays m**1** and m**3**. The media stream coming from the far end of the call on the PSTN **415** can be delivered over both of the L**1** and L**1'** legs to the mobile device **110**. The VCC client **1720** (FIG. **17**) on the mobile device **110** may enable one of the two media streams to be connected to the mobile phone's audio capture-and-rendering hardware, which may include for example, a microphone and speaker output.

When the newly established CS leg is stable (or the quality of the Wi-Fi connection becomes unacceptable), the VCC client **1720** on the mobile device **110** can disconnect the VoIP/Wi-Fi stream from the user's audio capture-and-render hardware. The old call leg L**1** then becomes superfluous and will be torn down. Handoff of the call is now complete as shown in FIG. **20**. If at this stage of handoff the Wi-Fi connection fails, the network will typically remove the leg L**1** after a suitable guard time interval. Clean-up of the call state will also typically be performed to ensure that it accurately reflects the handoff and the media flow over the new call leg.

While the above illustrative examples describe centralized call routing in the context of a visited MO network, it is emphasized that the present principles described herein may also be applied to other contexts. For example, a mobile device may utilize other types of communications infrastructure to gain access to telephony and data services such as IP-based Wi-Fi and Ethernet networks, white space networks, PSTNs, short-range wireless networks, satellite networks, etc, which are supported by various mobile operators, enterprises, Internet service providers (ISPs), telephone service providers, data service providers, and the like. It will be appreciated that calls using such communications infrastructure may also be routed so that the home network is placed in the call path so that the call can be anchored in the VoIP core network. For example, the CR client and CR service can be adapted to enable a call initiated using Wi-Fi over some IP network to be routed to the VoIP core network **600** (FIG. **6**). In this case, the Wi-Fi network and VoIP core network can be completely separate networks and independently operated but centralized call routing may still be utilized with the attendant benefits of call anchoring such as a consistent user experience, improved authorization and fraud management, and enhanced call control features such as call treatments and VCC.

FIG. **21** is a simplified block diagram of an illustrative computer system **2100** such as a personal computer (PC), client machine, or server with which centralized routing in hybrid networks may be implemented. Computer system **2100** includes a processor **2105**, a system memory **2111**, and a system bus **2114** that couples various system components including the system memory **2111** to the processor **2105**. The system bus **2114** may be any of several types of bus structures including a memory bus or memory controller, a peripheral bus, or a local bus using any of a variety of bus architectures. The system memory **2111** includes read only memory (ROM) **2117** and random access memory (RAM) **2121**. A basic input/output system (BIOS) **2125**, containing the basic routines that help to transfer information between elements within the computer system **2100**, such as during startup, is stored in ROM **2117**. The computer system **2100** may further include a hard disk drive **2128** for reading from and writing to an internally disposed hard disk (not shown), a magnetic disk drive **2130** for reading from or writing to a removable magnetic disk **2133** (e.g., a floppy disk), and an optical disk drive **2138** for reading from or writing to a removable optical disk **2143** such as a CD (compact disc), DVD (digital versatile disc), or other optical media. The hard disk drive **2128**, magnetic disk drive **2130**, and optical disk drive **2138** are connected to the system bus **2114** by a hard disk drive interface **2146**, a magnetic disk drive interface **2149**, and an optical drive interface **2152**, respectively. The drives and their associated computer-readable storage media provide non-volatile storage of computer-readable instructions, data structures, program modules, and other data for the computer system **2100**. Although this illustrative

example includes a hard disk, a removable magnetic disk **2133**, and a removable optical disk **2143**, other types of computer-readable storage media which can store data that is accessible by a computer such as magnetic cassettes, Flash memory cards, digital video disks, data cartridges, random access memories (RAMs), read only memories (ROMs), and the like may also be used in some applications of the present centralized routing in hybrid networks. In addition, as used herein, the term computer-readable storage media includes one or more instances of a media type (e.g., one or more magnetic disks, one or more CDs, etc.). For purposes of this specification and the claims, the phrase "computer-readable storage media" and variations thereof, does not include waves, signals, and/or other transitory and/or intangible communication media.

A number of program modules may be stored on the hard disk, magnetic disk **2133**, optical disk **2143**, ROM **2117**, or RAM **2121**, including an operating system **2155**, one or more application programs **2157**, other program modules **2160**, and program data **2163**. A user may enter commands and information into the computer system **2100** through input devices such as a keyboard **2166** and pointing device **2168** such as a mouse. Other input devices (not shown) may include a microphone, joystick, game pad, satellite dish, scanner, trackball, touchpad, touch screen, touch-sensitive device, voice-command module or device, user motion or user gesture capture device, or the like. These and other input devices are often connected to the processor **2105** through a serial port interface **2171** that is coupled to the system bus **2114**, but may be connected by other interfaces, such as a parallel port, game port, or universal serial bus (USB). A monitor **2173** or other type of display device is also connected to the system bus **2114** via an interface, such as a video adapter **2175**. In addition to the monitor **2173**, personal computers typically include other peripheral output devices (not shown), such as speakers and printers. The illustrative example shown in FIG. **21** also includes a host adapter **2178**, a Small Computer System Interface (SCSI) bus **2183**, and an external storage device **2176** connected to the SCSI bus **2183**.

The computer system **2100** is operable in a networked environment using logical connections to one or more remote computers, such as a remote computer **2188**. The remote computer **2188** may be selected as another personal computer, a server, a router, a network PC, a peer device, or other common network node, and typically includes many or all of the elements described above relative to the computer system **2100**, although only a single representative remote memory/storage device **2190** is shown in FIG. **21**. The logical connections depicted in FIG. **21** include a local area network (LAN) **2193** and a wide area network (WAN) **2195**. Such networking environments are often deployed, for example, in offices, enterprise-wide computer networks, intranets, and the Internet.

When used in a LAN networking environment, the computer system **2100** is connected to the local area network **2193** through a network interface or adapter **2196**. When used in a WAN networking environment, the computer system **2100** typically includes a broadband modem **2198**, network gateway, or other means for establishing communications over the wide area network **2195**, such as the Internet. The broadband modem **2198**, which may be internal or external, is connected to the system bus **2114** via a serial port interface **2171**. In a networked environment, program modules related to the computer system **2100**, or portions thereof, may be stored in the remote memory storage device **2190**. It is noted that the network connections shown in FIG. **21** are illustrative and other means of establishing a communications link between the computers may be used depending on the specific requirements of an application of the present centralized routing in hybrid networks.

FIG. **22** shows an illustrative architecture **2200** for a device capable of executing the various components described herein for providing the present centralized routing in hybrid networks. Thus, the architecture **2200** illustrated in FIG. **22** shows an architecture that may be adapted for a server computer, mobile phone, a PDA, a smartphone, a desktop computer, a netbook computer, a tablet computer, GPS device, gaming console, and/or a laptop computer. The architecture **2200** may be utilized to execute any aspect of the components presented herein.

The architecture **2200** illustrated in FIG. **22** includes a CPU (Central Processing Unit) **2202**, a system memory **2204**, including a RAM **2206** and a ROM **2208**, and a system bus **2210** that couples the memory **2204** to the CPU **2202**. A basic input/output system containing the basic routines that help to transfer information between elements within the architecture **2200**, such as during startup, is stored in the ROM **2208**. The architecture **2200** further includes a mass storage device **2212** for storing software code or other computer-executed code that is utilized to implement applications, the file system, and the operating system.

The mass storage device **2212** is connected to the CPU **2202** through a mass storage controller (not shown) connected to the bus **2210**. The mass storage device **2212** and its associated computer-readable storage media provide non-volatile storage for the architecture **2200**.

Although the description of computer-readable storage media contained herein refers to a mass storage device, such as a hard disk or CD-ROM drive, it should be appreciated by those skilled in the art that computer-readable storage media can be any available storage media that can be accessed by the architecture **2200**.

By way of example, and not limitation, computer-readable storage media may include volatile and non-volatile, removable and non-removable media implemented in any method or technology for storage of information such as computer-readable instructions, data structures, program modules, or other data. For example, computer-readable media includes, but is not limited to, RAM, ROM, EPROM (erasable programmable read only memory), EEPROM (electrically erasable programmable read only memory), Flash memory or other solid state memory technology, CD-ROM, DVDs, HD-DVD (High Definition DVD), Blu-ray, or other optical storage, magnetic cassettes, magnetic tape, magnetic disk storage or other magnetic storage devices, or any other medium which can be used to store the desired information and which can be accessed by the architecture **2200**.

According to various embodiments, the architecture **2200** may operate in a networked environment using logical connections to remote computers through a network. The architecture **2200** may connect to the network through a network interface unit **2216** connected to the bus **2210**. It should be appreciated that the network interface unit **2216** also may be utilized to connect to other types of networks and remote computer systems. The architecture **2200** also may include an input/output controller **2218** for receiving and processing input from a number of other devices, including a keyboard, mouse, or electronic stylus (not shown in FIG. **22**). Similarly, the input/output controller **2218** may provide output to a display screen, a printer, or other type of output device (also not shown in FIG. **22**).

It should be appreciated that the software components described herein may, when loaded into the CPU **2202** and executed, transform the CPU **2202** and the overall architecture **2200** from a general-purpose computing system into a special-purpose computing system customized to facilitate the functionality presented herein. The CPU **2202** may be constructed from any number of transistors or other discrete circuit elements, which may individually or collectively assume any number of states. More specifically, the CPU **2202** may operate as a finite-state machine, in response to executable instructions contained within the software modules disclosed herein. These computer-executable instructions may transform the CPU **2202** by specifying how the CPU **2202** transitions between states, thereby transforming the transistors or other discrete hardware elements constituting the CPU **2202**.

Encoding the software modules presented herein also may transform the physical structure of the computer-readable storage media presented herein. The specific transformation of physical structure may depend on various factors, in different implementations of this description. Examples of such factors may include, but are not limited to, the technology used to implement the computer-readable storage media, whether the computer-readable storage media is characterized as primary or secondary storage, and the like. For example, if the computer-readable storage media is implemented as semiconductor-based memory, the software disclosed herein may be encoded on the computer-readable storage media by transforming the physical state of the semiconductor memory. For example, the software may transform the state of transistors, capacitors, or other discrete circuit elements constituting the semiconductor memory. The software also may transform the physical state of such components in order to store data thereupon.

As another example, the computer-readable storage media disclosed herein may be implemented using magnetic or optical technology. In such implementations, the software presented herein may transform the physical state of magnetic or optical media, when the software is encoded therein. These transformations may include altering the magnetic characteristics of particular locations within given magnetic media. These transformations also may include altering the physical features or characteristics of particular locations within given optical media to change the optical characteristics of those locations. Other transformations of physical media are possible without departing from the scope and spirit of the present description, with the foregoing examples provided only to facilitate this discussion.

In light of the above, it should be appreciated that many types of physical transformations take place in the architecture **2200** in order to store and execute the software components presented herein. It also should be appreciated that the architecture **2200** may include other types of computing devices, including handheld computers, embedded computer systems, smartphones, PDAs, and other types of computing devices known to those skilled in the art. It is also contemplated that the architecture **2200** may not include all of the components shown in FIG. **22**, may include other components that are not explicitly shown in FIG. **22**, or may utilize an architecture completely different from that shown in FIG. **22**.

FIG. **23** is a functional block diagram of an illustrative mobile device **110** such as a mobile phone or smartphone including a variety of optional hardware and software components, shown generally at **2302**. Any component **2302** in the mobile device can communicate with any other component, although, for ease of illustration, not all connections are shown. The mobile device can be any of a variety of computing devices (e.g., cell phone, smartphone, handheld computer, PDA, etc.) and can allow wireless two-way communications with one or more mobile communication networks **2304**, such as a cellular or satellite network.

The illustrated mobile device **110** can include a controller or processor **2310** (e.g., signal processor, microprocessor, microcontroller, ASIC (Application Specific Integrated Circuit), or other control and processing logic circuitry) for performing such tasks as signal coding, data processing, input/output processing, power control, and/or other functions. An operating system **2312** can control the allocation and usage of the components **2302**, including power states, above-lock states, and below-lock states, and provides support for one or more application programs **2314**. The application programs can include common mobile computing applications (e.g., image-capture applications, email applications, calendars, contact managers, web browsers, messaging applications), or any other computing application.

The illustrated mobile device **110** can include memory **2320**. Memory **2320** can include non-removable memory **2322** and/or removable memory **2324**. The non-removable memory **2322** can include RAM, ROM, Flash memory, a hard disk, or other well-known memory storage technologies. The removable memory **2324** can include Flash memory or a Subscriber Identity Module (SIM) card, which is well known in GSM (Global System for Mobile communications) systems, or other well-known memory storage technologies, such as "smart cards." The memory **2320** can be used for storing data and/or code for running the operating system **2312** and the application programs **2314**. Example data can include web pages, text, images, sound files, video data, or other data sets to be sent to and/or received from one or more network servers or other devices via one or more wired or wireless networks.

The memory **2320** may also be arranged as, or include, one or more computer-readable storage media implemented in any method or technology for storage of information such as computer-readable instructions, data structures, program modules or other data. For example, computer-readable media includes, but is not limited to, RAM, ROM, EPROM, EEPROM, Flash memory or other solid state memory technology, CD-ROM (compact-disc ROM), DVD, (Digital Versatile Disc) HD-DVD (High Definition DVD), Blu-ray, or other optical storage, magnetic cassettes, magnetic tape, magnetic disk storage or other magnetic storage devices, or any other medium which can be used to store the desired information and which can be accessed by the mobile device **110**.

The memory **2320** can be used to store a subscriber identifier, such as an International Mobile Subscriber Identity (IMSI), and an equipment identifier, such as an International Mobile Equipment Identifier (IMEI). Such identifiers can be transmitted to a network server to identify users and equipment. The mobile device **110** can support one or more input devices **2330**; such as a touch screen **2332**; microphone **2334** for implementation of voice input for voice recognition, voice commands and the like; camera **2336**; physical keyboard **2338**; trackball **2340**; and/or proximity sensor **2342**; and one or more output devices **2350**, such as a speaker **2352** and one or more displays **2354**. Other input devices (not shown) using gesture recognition may also be utilized in some cases. Other possible output devices (not shown) can include piezoelectric or haptic output devices. Some devices can serve more than one input/output function. For example, touchscreen **2332** and display **2354** can be combined into a single input/output device.

A wireless modem **2360** can be coupled to an antenna (not shown) and can support two-way communications between the processor **2310** and external devices, as is well understood in the art. The modem **2360** is shown generically and can include a cellular modem for communicating with the mobile communication network **2304** and/or other radio-based modems (e.g., Bluetooth **2364** or Wi-Fi **2362**). The wireless modem **2360** is typically configured for communication with one or more cellular networks, such as a GSM network for data and voice communications within a single cellular network, between cellular networks, or between the mobile device and a public switched telephone network (PSTN).

The mobile device can further include at least one input/output port **2380**, a power supply **2382**, a satellite navigation system receiver **2384**, such as a GPS receiver, an accelerometer **2386**, a gyroscope (not shown), and/or a physical connector **2390**, which can be a USB port, IEEE 1394 (FireWire) port, and/or an RS-232 port. The illustrated components **2302** are not required or all-inclusive, as any components can be deleted and other components can be added.

Based on the foregoing, it should be appreciated that technologies for centralized routing in hybrid networks have been disclosed herein. Although the subject matter presented herein has been described in language specific to computer structural features, methodological and transformative acts, specific computing machinery, and computer-readable storage media, it is to be understood that the invention defined in the appended claims is not necessarily limited to the specific features, acts, or media described herein. Rather, the specific features, acts, and mediums are disclosed as example forms of implementing the claims.

The subject matter described above is provided by way of illustration only and should not be construed as limiting. Various modifications and changes may be made to the subject matter described herein without following the example embodiments and applications illustrated and described, and without departing from the true spirit and scope of the present invention, which is set forth in the following claims.

What is claimed:

1. A method performed by a mobile device having telephony capabilities, comprising:

receiving an input that indicates a destination number for an outbound call to a remote party;

placing a make-call request to a home network;

receiving a roaming routing number (RRN) from the home network in response to the make-call request;

calling into the roaming routing number (RRN) over a mobile operator (MO) network, the roaming routing number being terminated within a home network that is a portion of a hybrid network, the hybrid network having loosely coupled network portions including one or more MO networks and the home network; and

sending a dialing string to the home network that includes the destination number, the home network responsively placing a call to the destination number and bridging the call from the mobile device and the call to the destination number to create an end-to-end call path between the mobile device and remote party to thereby anchor media, signaling, and context associated with the call in the home network,

wherein the dialing string includes an encoded portion, the encoded portion being calculated using the destination number and a PIN (personal identification number), the PIN being commonly shared by the mobile device and the home network.

2. The method of claim **1** further comprising including a source number associated with the mobile device in the dialing string.

3. The method of claim **1**, wherein the encoded portion is created using either a hashing algorithm or a Luhn checksum algorithm.

4. The method of claim **3** further comprising including a source number associated with the mobile device in the encoded portion.

5. The method of claim **1** further comprising calling into the RRN over a circuit-switched voice connection supported by the MO network and sending the dialing string using audio encoding.

6. The method of claim **5** further comprising performing the audio encoding using one of DTMF (Dual Tone, Multiple Frequency) or TDD/TTY (Telecommunications Device for the Deaf/Teletypewriter).

7. The method of claim **1** further comprising pausing between calling into the RRN and sending the dialing string, a pause length being variable and selected according to a rule, heuristic, or policy.

8. The method of claim **1** further comprising receiving a signal from the home network that indicates that the home network is ready to receive the dialing string.

9. The method of claim **1** further comprising either accessing the RRN as a pre-provisioned resource or obtaining the RRN from the home network over a data connection supported by the MO network.

10. The method of claim **1** further comprising sending the dialing string in accordance with USSD (Unstructured Supplementary Service Data) under GSM (Global System for Mobile communications).

11. A mobile device, comprising:

one or more processors; and

memory operatively coupled to the one or more processors and storing computer-readable instructions that, when executed by the one or more processors, perform a method comprising the steps of:

receiving an input from a user of the mobile device that indicates a destination number for an outbound call to a remote device,

inserting the destination number in a dialing string, wherein the dialing string includes an encoded portion, the encoded portion being calculated using the destination number and a PIN (personal identification number), the PIN being commonly shared by the mobile device and a home network,

placing a make-call request to a centralized routing (CR) service exposed by the home network, the home network being a portion of a hybrid network that includes one or more mobile operator (MO) networks, the make-call request being transmitted over a cellular data connection supported by an MO network,

receiving a roaming routing number (RRN) from the CR service over the cellular data connection in response to the make-call request, the RRN terminating in the home network,

placing a call into the RRN over a cellular voice connection supported by the MO network, and

sending the dialing string to the CR service over the cellular voice call to the RRN using audio encoding.

12. The mobile device of claim **11** further comprising playing audio including one of white noise, voice, audio tones, or comfort sounds on an audio endpoint associated

with the mobile device during at least a portion of a time that an end-to-end call path between the mobile device and remote device is being set up.

13. The mobile device of claim **11** in which the CR service, in response to the receipt of the dialing string responsively places a call to the destination number and bridges cellular voice call and the call to the destination number to create an end-to-end call path between the mobile device at a local end and remote party at a far end, the method further comprising receiving a signal from the CR service that indicates ringing or busy at the far end and playing an audio ringtone or busy signal on an audio endpoint associated with the mobile device in response to the received signal.

14. One or more computer-readable memories storing instruction which, when executed by one or more processors disposed in an electronic device, implement a centralized routing (CR) service exposed by a home network in a hybrid network, the CR service performing a method comprising:

receiving a make-call request from a CR client instantiated on a mobile device, the make-call request including a source number associated with the mobile device, the make-call request being transported over a cellular data connection provided by a visited mobile operator (MO) network;

calling the mobile device using the source number over a cellular calling connection provided the visited mobile operator network;

receiving a destination number for a remote party from the CR client in a dialing string, at least a portion of the dialing string being encoded using a PIN (personal identification number), the PIN being commonly shared by the CR client and CR service, and further verifying the integrity of the destination number using the encoded portion of the dialing string;

calling the remote party using the destination number;

bridging the call to the mobile device and the call to the remote party;

implementing one or more call control features for the bridged call, the call control features including one of voice call continuity or mid-call treatments.

15. The one or more computer-readable memories of claim **14** further comprising creating an end-to-end call path between local and far ends of the bridged call, the end-to-end call path traversing the home network.

16. The one or more computer-readable memories of claim **14** further comprising authenticating an identity of a calling party using the encoded portion of the dialing string.

17. The one or more computer-readable memories of claim **16** further comprising receiving the dialing string over one of the cellular calling connection or the cellular data connection.

18. The one or more computer-readable memories of claim **16** further comprising sending a signal to the CR client to indicate that the CR service is ready to receive the dialing string.

19. The one or more computer-readable memories of claim **14** further comprising collecting connection statistics from users associated with the home network, developing connection policies using the collected connection statistics, and sending the connection policies to the mobile device, the connection policies governing at least portions of operations of the CR client.

20. The one or more computer-readable memories of claim **18** further comprising developing the connection policies to control CR client operations including at least one of how to generate the dialing string, how to transmit the dialing string, or when to transmit the dialing string.

* * * * *