US009439032B2

(12) **United States Patent**
Dowlatkhah et al.

(10) **Patent No.: US 9,439,032 B2**
(45) **Date of Patent: Sep. 6, 2016**

(54) **LOCATING A DEVICE VIA A TEXT MESSAGE**

(71) Applicant: **AT&T Intellectual Property I, L.P.**, Atlanta, GA (US)

(72) Inventors: **Sangar Dowlatkhah**, Alpharetta, GA (US); **Venson M. Shaw**, Kirkland, WA (US)

(73) Assignee: **AT&T Intellectual Property I, L.P.**, Atlanta, GA (US)

(*) Notice: Subject to any disclaimer, the term of this patent is extended or adjusted under 35 U.S.C. 154(b) by 119 days.

(21) Appl. No.: **14/093,192**

(22) Filed: **Nov. 29, 2013**

(65) **Prior Publication Data**

US 2015/0156604 A1 Jun. 4, 2015

(51) **Int. Cl.**

H04W 24/00	(2009.01)
H04W 4/02	(2009.01)
H04W 4/14	(2009.01)
H04W 12/06	(2009.01)
H04L 29/06	(2006.01)

(52) **U.S. Cl.**

CPC ***H04W 4/02*** (2013.01); ***H04W 4/14*** (2013.01); ***H04W 12/06*** (2013.01); *H04L 63/12* (2013.01)

(58) **Field of Classification Search**

CPC H04W 4/00; H04W 4/02–4/046

USPC 455/404.2, 414.1, 414.2, 456.1–456.6, 455/457; 370/310.2, 312, 338

See application file for complete search history.

(56) **References Cited**

U.S. PATENT DOCUMENTS

7,277,713	B2	10/2007	Landschaft	
7,565,154	B2	7/2009	Yoon	
7,620,406	B2 *	11/2009	Nagashima et al.	455/456.1
7,813,743	B1	10/2010	Loeb	
7,826,830	B1 *	11/2010	Patel et al.	455/414.1
8,116,748	B2 *	2/2012	Aaron	455/414.2
8,369,874	B2	2/2013	Lee	

(Continued)

FOREIGN PATENT DOCUMENTS

KR 10-2006036164 A 4/2006

Primary Examiner — Steve D Agosta
(74) *Attorney, Agent, or Firm* — Baker & Hostetler LLP

(57) **ABSTRACT**

A first device may receive a location of a second device simply by sending a text message to the second device. The text message may comprise an identifier of the second device (e.g., phone number of the second device, mobile subsection identification number of the second device, etc.) and a location code. A communication network may intercept the text message. The communication network may analyze contents of the text message. The network may determine that the location code is valid and determine the location of the second device. The network may provide an indication of the location of the second device to the first device.

18 Claims, 10 Drawing Sheets

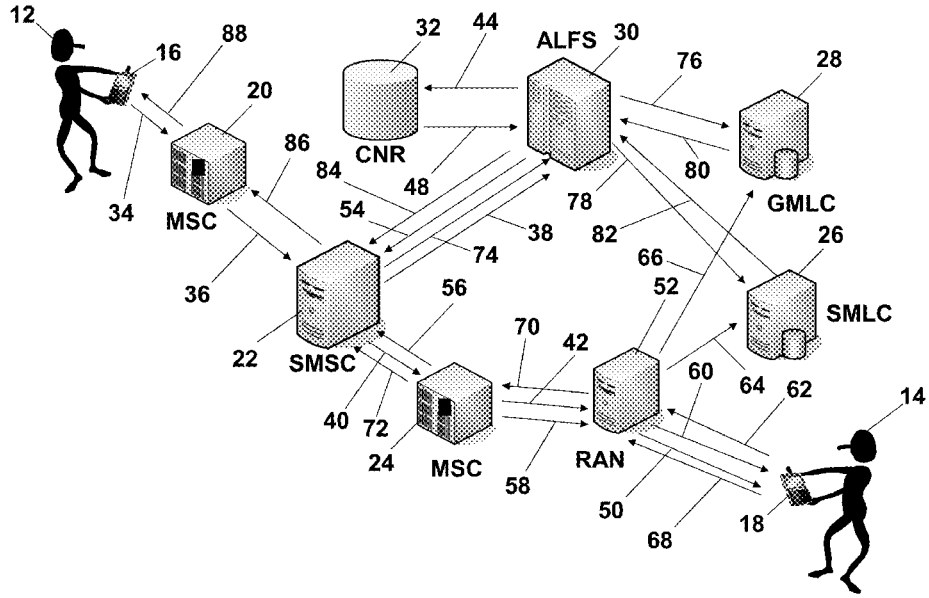

(56) **References Cited**

U.S. PATENT DOCUMENTS

8,391,886	B1	3/2013	Thaper	
2004/0116128	A1	6/2004	Chen	
2005/0070305	A1*	3/2005	Krasner et al.	455/456.1
2007/0191025	A1*	8/2007	McBrierty et al.	455/456.2
2008/0064391	A1*	3/2008	Cai	H04M 3/54 455/426.1
2008/0129491	A1*	6/2008	Ruperto	G01C 21/3626 340/539.13
2008/0186165	A1*	8/2008	Bertagna	G08B 21/0227 340/539.13
2008/0248820	A1	10/2008	Lohtia	
2009/0325603	A1	12/2009	Herz S et al.	
2011/0171968	A1	7/2011	Hyun et al.	
2011/0223881	A1	9/2011	Brok den et al.	
2012/0282949	A1	11/2012	Wang	
2012/0302198	A1*	11/2012	Ku et al.	455/404.2
2012/0323687	A1	12/2012	Schuster et al.	
2013/0137461	A1	5/2013	Manzanares Sancho et al.	
2013/0178193	A1	7/2013	McNamara et al.	

* cited by examiner

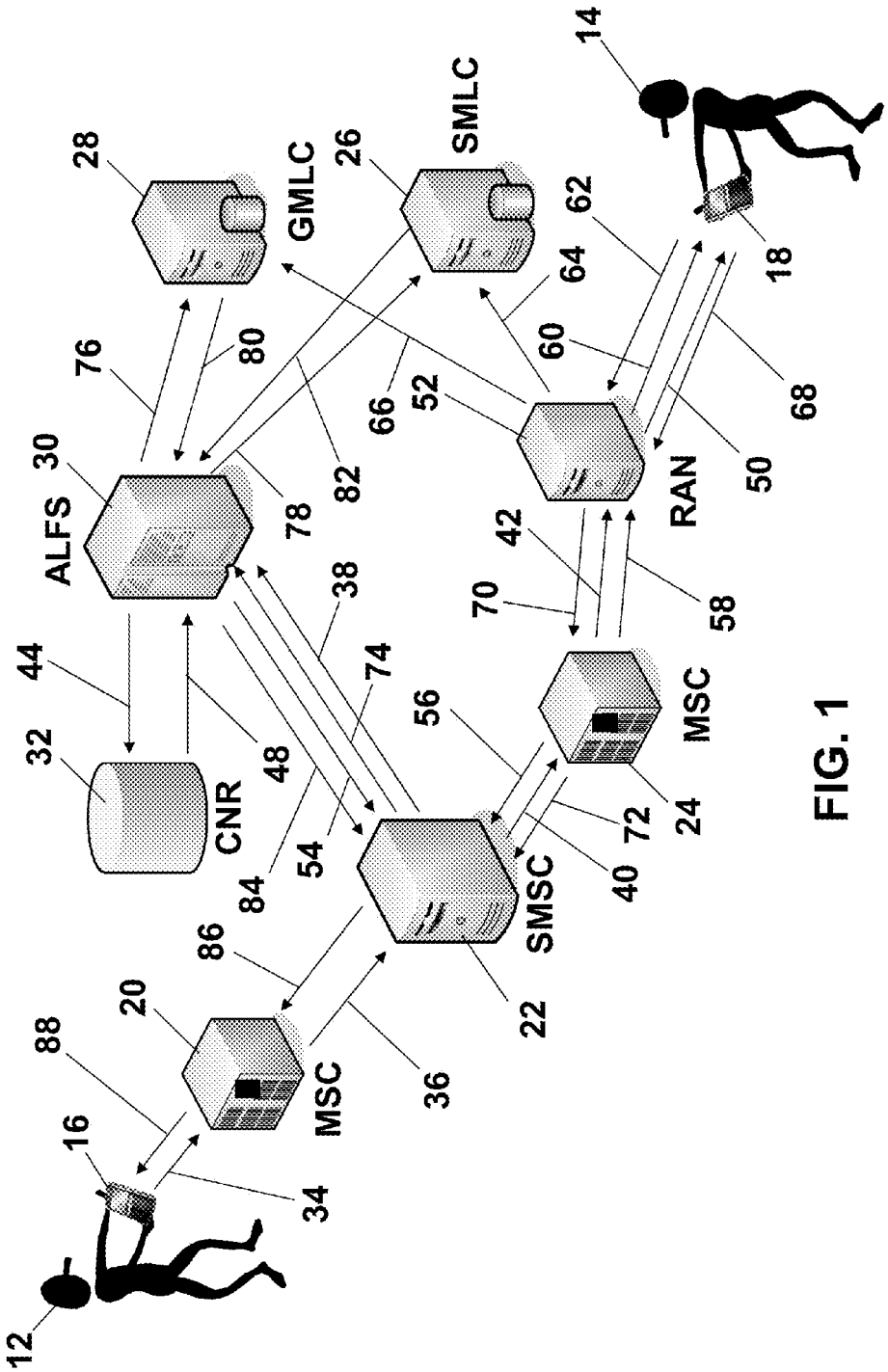

ALFS
GMLC
SMLC
CNR
MSC
SMSC
MSC
RAN
12
14
16
18
20
22
24
26
28
30
32
34
36
38
40
42
44
48
50
52
54
56
58
60
62
64
66
68
70
72
74
76
78
80
82
84
86
88

FIG. 1

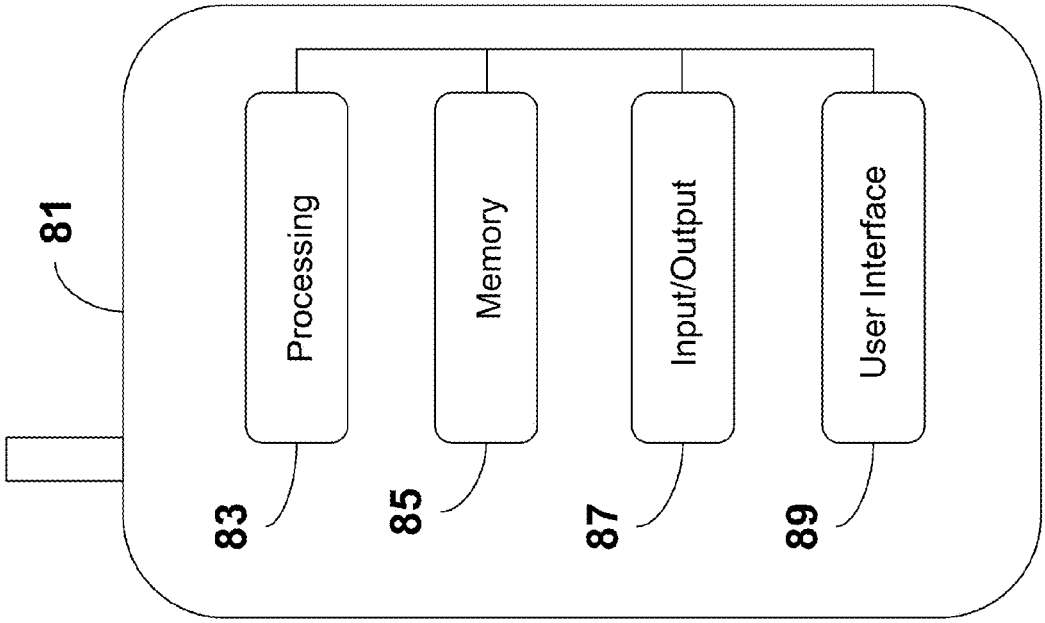
81
Processing
Memory
Input/Output
User Interface
83
85
87
89

FIG. 2

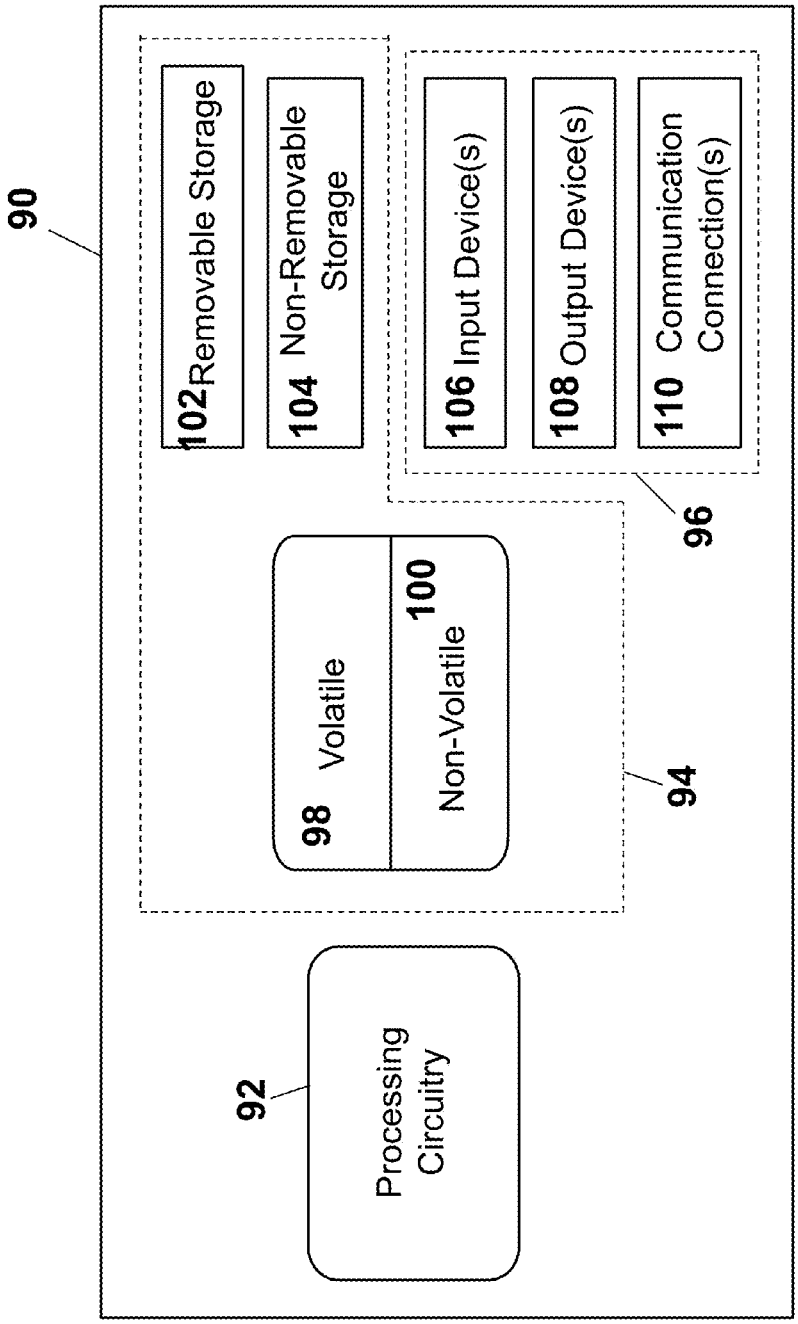
90
102 Removable Storage
104 Non-Removable Storage
106 Input Device(s)
108 Output Device(s)
110 Communication Connection(s)
96
98 Volatile
100 Non-Volatile
94
92
Processing Circuitry

FIG. 3

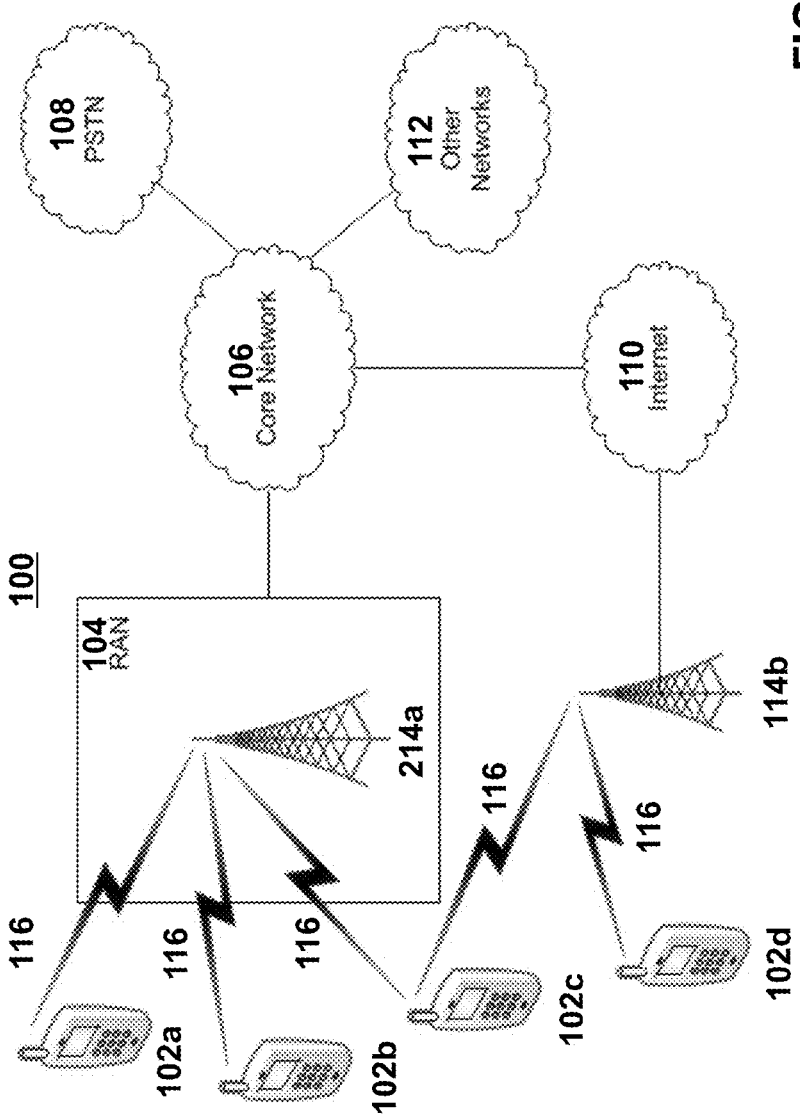
100
108
PSTN
112
Other
Networks
106
Core Network
110
Internet
104
RAN
214a
114b
116
116
116
116
116
102a
102b
102c
102d

FIG. 4

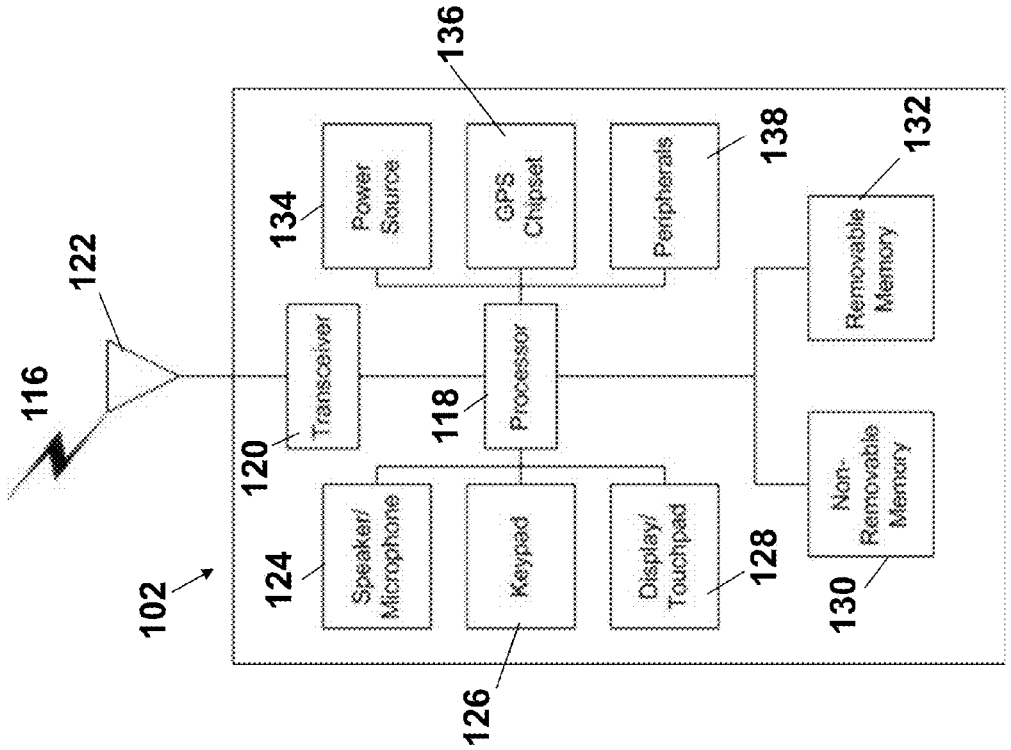
116
122
102
120
Transceiver
124
Speaker/ Microphone
126
Keypad
118
Processor
134
Power Source
136
GPS Chipset
Peripherals
138
Display/ Touchpad
128
Removable Memory
132
Non-Removable Memory
130

FIG. 5

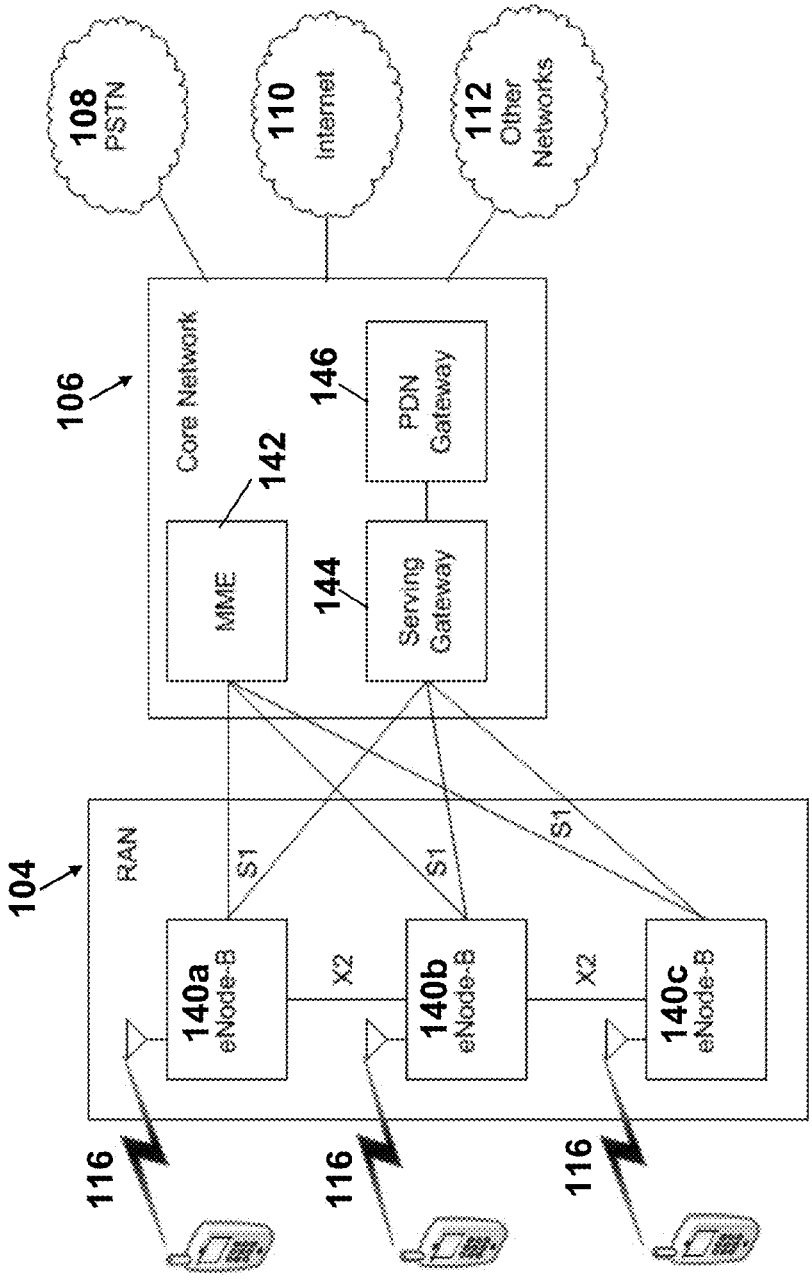
108
PSTN
110
Internet
112
Other
Networks
106
Core Network
142
MME
146
PDN
Gateway
144
Serving
Gateway
104
RAN
S1
S1
S1
140a
eNode-B
X2
140b
eNode-B
X2
140c
eNode-B
116
116
116

FIG. 6

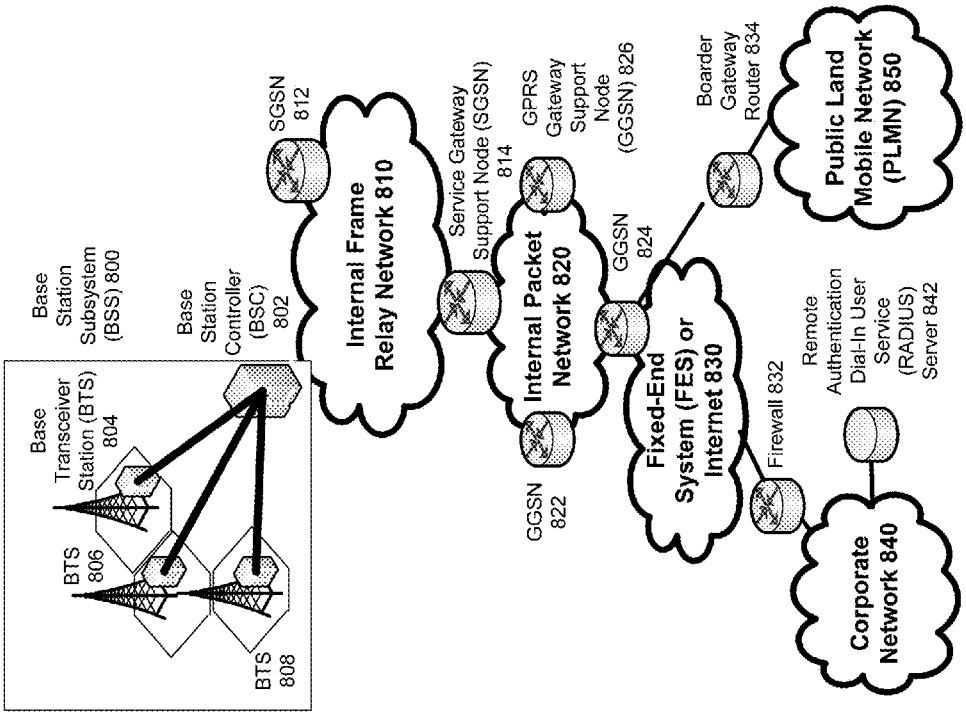
Base Station Subsystem (BSS) 800
Base Transceiver Station (BTS) 804
BTS 806
BTS 808
Base Station Controller (BSC) 802
SGSN 812
Internal Frame Relay Network 810
Service Gateway Support Node (SGSN) 814
GGSN 822
Internal Packet Network 820
GPRS Gateway Support Node (GGSN) 826
GGSN 824
Fixed-End System (FES) or Internet 830
Boarder Gateway Router 834
Public Land Mobile Network (PLMN) 850
Firewall 832
Remote Authentication Dial-In User Service (RADIUS) Server 842
Corporate Network 840

FIG. 7

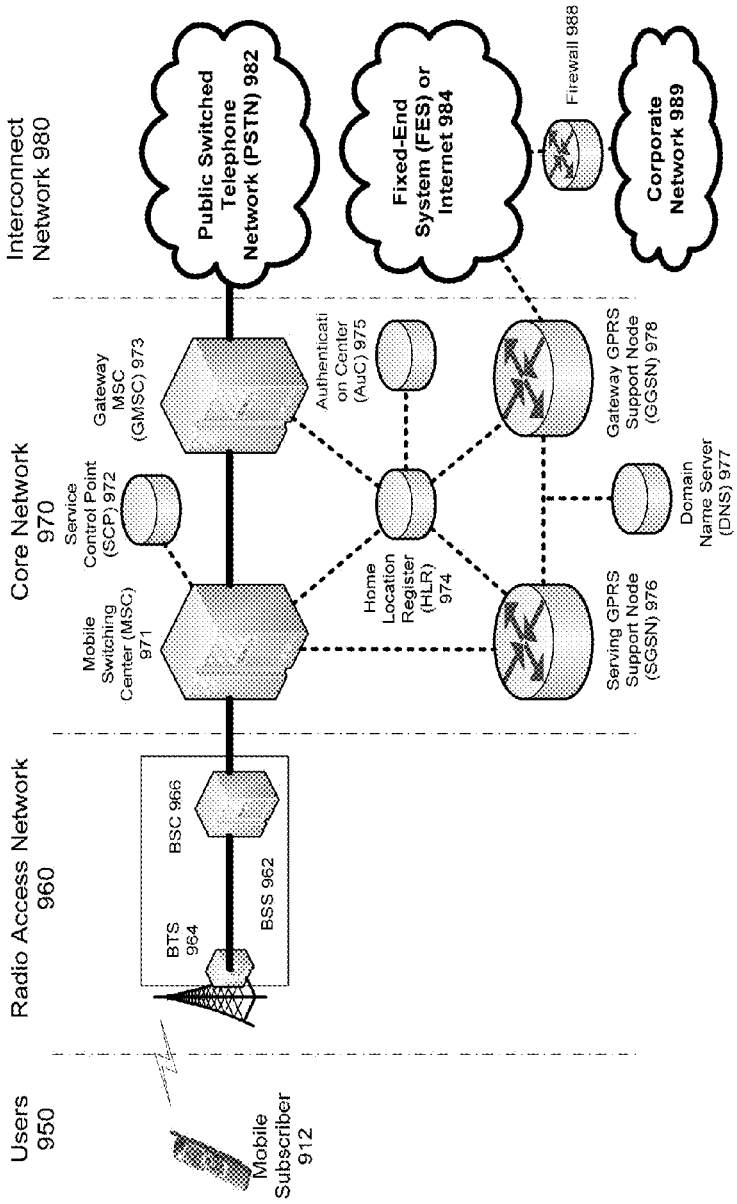
Users
950
Mobile
Subscriber
912
Radio Access Network
960
BTS
964
BSC 966
BSS 962
Core Network
970
Mobile
Switching
Center (MSC)
971
Service
Control Point
(SCP) 972
Gateway
MSC
(GMSC) 973
Home
Location
Register
(HLR)
974
Authenticati
on Center
(AuC) 975
Serving GPRS
Support Node
(SGSN) 976
Domain
Name Server
(DNS) 977
Gateway GPRS
Support Node
(GGSN) 978
Interconnect
Network 980
Public Switched
Telephone
Network (PSTN) 982
Fixed-End
System (FES) or
Internet 984
Firewall 988
Corporate
Network 989

FIG. 8

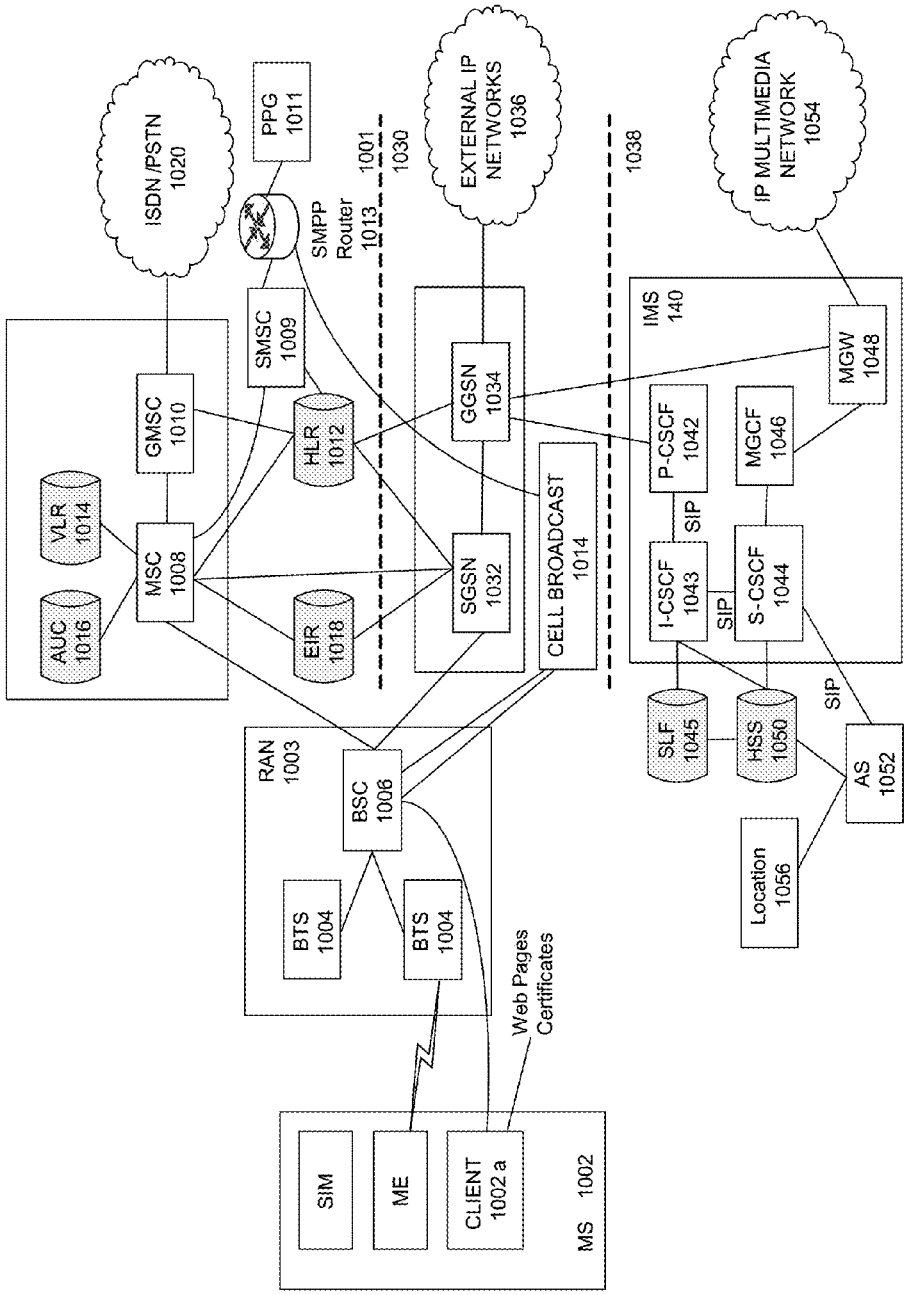
ISDN /PSTN 1020
PPG 1011
SMPP Router 1013
1001
1030
EXTERNAL IP NETWORKS 1036
1038
IP MULTIMEDIA NETWORK 1054
SMSC 1009
GMSC 1010
HLR 1012
GGSN 1034
IMS 140
MGW 1048
P-CSCF 1042
MGCF 1046
VLR 1014
MSC 1008
AUC 1016
EIR 1018
SGSN 1032
CELL BROADCAST 1014
SIP
I-CSCF 1043
S-CSCF 1044
SLF 1045
HSS 1050
AS 1052
Location 1056
RAN 1003
BSC 1006
BTS 1004
BTS 1004
Web Pages Certificates
SIM
ME
CLIENT 1002 a
MS 1002

FIG. 9

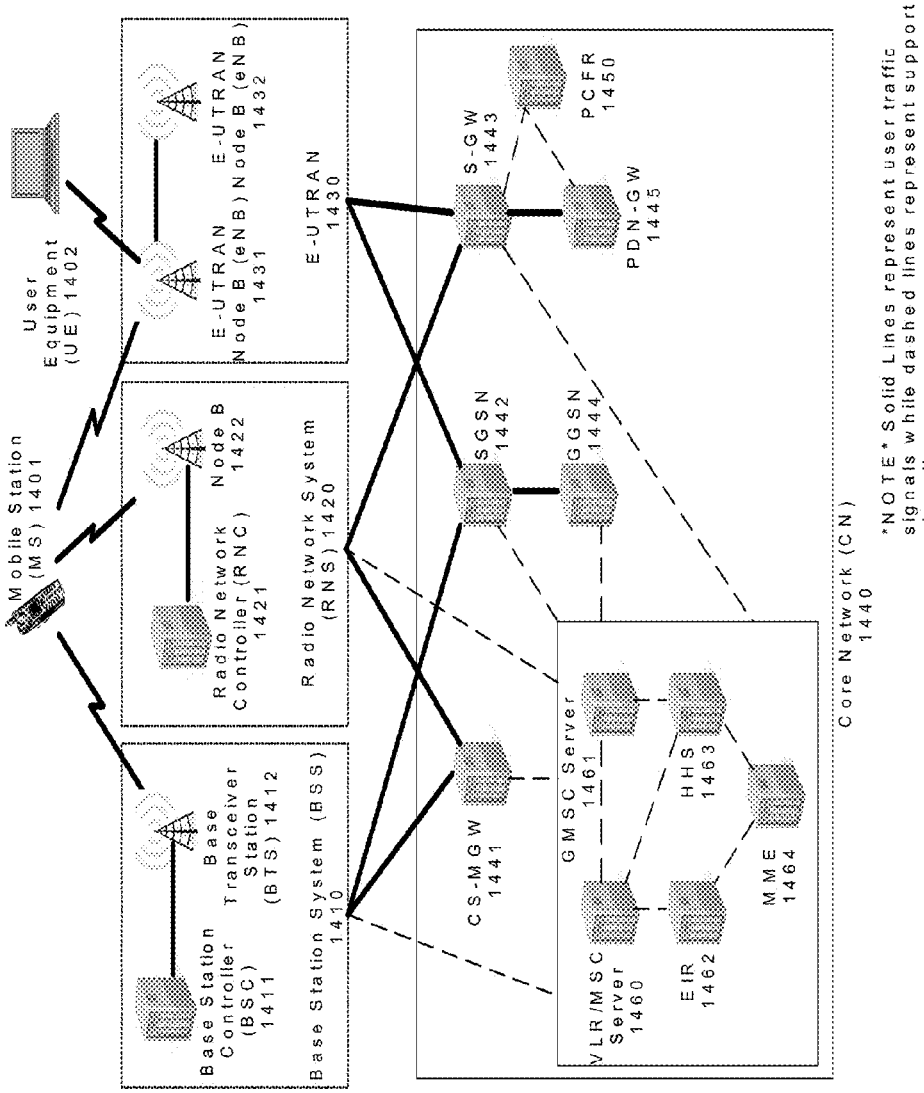
Mobile Station (MS) 1401
User Equipment (UE) 1402
Base Station Controller (BSC) 1411
Base Transceiver Station (BTS) 1412
Base Station System (BSS) 1410
Radio Network Controller (RNC) 1421
Node B 1422
Radio Network System (RNS) 1420
E-UTRAN Node B (eNB) 1431
E-UTRAN Node B (eNB) 1432
E-UTRAN 1430
CS-MGW 1441
SGSN 1442
S-GW 1443
GGSN 1444
PDN-GW 1445
PCFR 1450
VLR/MSC Server 1460
GMSC Server 1461
EIR 1462
HHS 1463
MME 1464
Core Network (CN) 1440
NOTE Solid Lines represent user traffic signals while dashed lines represent support signaling

FIG. 10

LOCATING A DEVICE VIA A TEXT MESSAGE

TECHNICAL FIELD

The technical field generally relates to communication, and more specifically to locating a device via a text message.

BACKGROUND

It is not uncommon for a person to want to know the location of another person. The reasons for wanting to know such information are numerous. For example, a parent may want to know the location of a child. A person may want to know the location of his or her spouse. A teacher may want to know the location of his or her students on a field trip.

The desire to know another's location could become urgent during an emergency situation. For example, when an event occurs, such as an earthquake, storm, etc., a person may want to know if a family member is within proximity of the event.

SUMMARY

The location of a device may be determined via a text message. In an example embodiment, a first device may receive a location of a second device simply by sending a text message to the second device. The text message may comprise a number associated with the second device (e.g., phone number of the second device, mobile subsection identification number—MSIN of the second device, etc.) and a predetermined (location) code. The text message may comprise a message for an intended recipient. A communication network may intercept the text message. The communication network, upon receipt of the text message, may analyze contents of the text message. If the text message comprises a message for an intended recipient, the communication network may parse the text message, and forward the message for the intended recipient to the intended recipient. The communication network may determine if the first device is authorized to receive the location of the second device. Upon a determination that the first device is authorized to receive the location of the second device, the network may determine the location of the second device via any of various techniques. In an example technique, the network may determine a recent location of the second device via registration with the network. In another example embodiment, the network may provide a request to the second device to determine its location, via global positioning system (GPS) equipment on the second device, or the like. The second device, in response, may determine its location via autonomous GPS and send an indication of its location to the network. In another example embodiment, the network may determine the location of the second device via assisted GPS (A-GPS) or the like. Upon determining the location of the second device, the network may provide an indication of the location of the second device to the first device.

BRIEF DESCRIPTION OF THE DRAWINGS

Aspects of determining a location of a device via a text message are described more fully herein with reference to the accompanying drawings, in which example embodiments are shown. In the following description, for purposes of explanation, numerous specific details are set forth in order to provide an understanding of the various embodiments. However, the instant disclosure may be embodied in many different forms and should not be construed as limited to the example embodiments set forth herein. Like numbers refer to like elements throughout.

FIG. **1** illustrates an example system and method for determining a location of a device via a text message.

FIG. **2** is a block diagram of an example device that may be utilized to facilitate locating a device via a text message.

FIG. **3** is a block diagram of another example device that may be utilized to facilitate locating a device via a text message.

FIG. **4** is a diagram of an example communications system in which locating a device via a text message may be implemented.

FIG. **5** is a system diagram of an example WTRU which may be utilized for locating a device via a text message.

FIG. **6** is a system diagram of an example RAN and an example core network.

FIG. **7** depicts an overall block diagram of an example packet-based mobile cellular network environment, such as a GPRS network, within which locating a device via a text message may be implemented.

FIG. **8** illustrates an architecture of a typical GPRS network within which locating a device via a text message may be implemented.

FIG. **9** illustrates an example block diagram view of a GSM/GPRS/IP multimedia network architecture within which locating a device via a text message may be implemented.

FIG. **10** illustrates a PLMN block diagram view of an example architecture within which locating a device via a text message may be implemented.

DETAILED DESCRIPTION OF ILLUSTRATIVE EMBODIMENTS

FIG. **1** illustrates an example system and method for determining a location of a device via a text message. As depicted in FIG. **1**, user **12** may want to determine/know the location of user **14**. From the perspective of user **12**, user **12** may generate and send a text message to user **14**, and in response, receive an indication of the location of user **14**. The text message may be generated via any appropriate manner. For example, user **12** may enter the communication address (e.g., phone number, email address, or the like) of device **18** and enter a predetermined code (also referred to herein as location code) as text into the text message. The location code may indicate that a location of the recipient device (e.g., device **18**) is to be determined. The text message may comprise a message for user **14**. In an example embodiment, user **12** may start an application, or the like, on device **16** that previously has been installed on device **16**. The application may provide user **12**, via a user interface, or the like, on device **16**, the option to initiate a text based session for determining a location of an intended recipient (device associated with the intended recipient).

In an example configuration, a text based session may automatically be initiated via preferences in a profile of user **12**. For example, based on user's **12** profile and a configuration of device **16**, user **12** may be able to select user **14** from a contact list, speak the name (or appropriate moniker) of user **14**, or the like, or any appropriate combination thereof. To indicate that a location of user **14** is to be determined, user **12** may tap (select) an icon (e.g., map, compass, weather vane, etc.) on device **16**, may touch a designated portion of device **16**, or any appropriate combination thereof. Selecting the icon may automatically gener-

ate the location code and incorporate the location code into the text message. In an example embodiment, user **12** may initiate generation of the text message and/or initiate generation of the location code via a voice command. For example, user **12** may say the term "locate," "find," "where," or the like, followed by a name, moniker, or the like, of the person of interest, to initiate generation of the location code and incorporation of the code into the text message. In this example embodiment, the location code and a destination address associated with the person of interest may automatically be generated.

In an example embodiment, user **12** may initiate generation of the text message and/or initiate generation of the location code via moving device **16** in a predetermined manner. For example, user **12** may shake device **16**, or the like, to initiate generation of the location code and incorporation of the code into the text message. In an example embodiment, user **12** may initiate generation of the text message and/or initiate generation of the location code via a predetermined gesture. The gesture may comprise any appropriate gesture, such as, for example, waving a hand proximate to device **16**, waving a hand proximate to a designated portion of device **16** (e.g., front of device, back of device, side of device, top of device, bottom of device, etc.).

A person may be interested in determining/knowing the location of another person only if the other person is within a specific region. For example, if a storm is approaching a town (e.g., Redmond, Wash.), a person may be interested in knowing if a family member is within a region proximate to the town. Accordingly, referring again to FIG. **1**, in an example embodiment, user **12** may select, via device **16**, a region of interest, and may receive an indication of a location of a person (e.g., user **14**) only if the person/user **14** is within the region of interest. The region may comprise any appropriate region, such as, for example, a two-dimensional region, a three-dimensional region, a geographic region, a building, a town, a moving region (e.g., vehicle), or any appropriate combination thereof. A region of interest may be selected in any appropriate manner. For example, a region may be selected by tracing a polygon (e.g., with a finger, digit, stylus, etc.) around a region as depicted on a map or the like. A region may be selected by tapping (selecting) a portion of a map, an icon, or the like. A region may be selected by providing a spoken description of the region (e.g., Pentagon, Redmond Town Center, New York City, Seattle library, specific ball park, etc.).

Upon initiating the text based session, the text message may be provided, by device **16**, at step **34**. In an example embodiment, the text message may be provided, at step **34**, to mobile switching center (MSC) **20**. MSC **20** may provide the text message, at step **36**, to short message service center (SMSC) **22**. SMSC **22** may analyze the text message and determine the contents of the text message. If it is determined that the text message comprises a message for the intended recipient (e.g., user **14**), SMSC **22** may parse the text message, or the like, in order to forward, via MSC **24** and radio access network (RAN) **52**, at step **40**, step **42**, and step **50**, the appropriately formatted message for the intended recipient (e.g., user **14**) to the intended recipient (e.g., user **14**). Upon analyzing the text message (received at step **36**), SMSC **22** may determine that the text message contains the predetermined location code. Upon detecting the predetermined location code in the text message, SMSC **22**, may provide the text message, at step **38**, to automatic location function server (ALFS) **30**. In an example embodiment, if the text message (receive at step **36**) does not comprise a message for an intended recipient, and does comprise the location code, rather than forwarding the text message to user **14**, SMSC **22** may provide the text message to automatic location function server (ALFS) **30**, at step **38**.

The location code may comprise any appropriate code, message, indicator, or the like, that may indicate that a location is being requested. In an example embodiment, the location code may comprise a specific text message. In an example embodiment, the specific text message may comprise five digits or characters. The location code may be a static code that never changes, a dynamic code that may be updated, or any appropriate combination thereof (e.g., a portion of the code may be static and a portion of the code may be dynamic). In an example embodiment, the location code may be incorporated into metadata of the text message, the location code may be incorporated into text of the text message, the location code may be incorporated into the body of the text message, the location code may be incorporated into a subject line of the text message, the location code may be incorporated into an attachment of the text message, the location code may comprise text, the location code may comprise a graphic, the location code may comprise an image, the location code may comprise multimedia, or any appropriate combination thereof.

ALFS **30**, responsive to receiving the text message (received at step **38**), may analyze the message to determine the provider (sender) of the message (e.g., user **12** via device **16**), the person of interest (e.g., user **14**), and to further analyze the location code. The location code may be analyzed to determine if the location code is valid.

It may be determined if user **12** is authorized to receive an indication of the location of user **14**. This authorization may be determined by analyzing a user profile of user **12**, by analyzing a user profile of user **14**, or any appropriate combination thereof. Accordingly, in an example embodiment, ALFS **30** may determine if the provider of the text message (e.g., user **12**) is authorized to receive an indication of the location of the person of interest (e.g., user **14**). ALFS may query, at step **44**, consolidated network repository (CNR) **32** for information from a profile of the provider of the text message (e.g., user's **12** profile). CNR **32** may comprise any appropriate repository, processor, server, apparatus, or the like. In an example embodiment, CNR **32** may comprise a combination of a home location register (HLR) and a home subscriber server (HSS). CNR **32** may comprise a user profile for user **12**. CNR **32** may respond to the query at step **48**.

In an example embodiment, ALFS **30** may query CNR **32** for an indication as to whether user **12** is authorized to receive an indication of the location of user **14**. CNR **32** may retrieve the profile of user **12**, and upon analysis thereof, determine whether user **12** is authorized to receive an indication of the location of user **14**. And, at step **48**, CNR **48** may provide to ALFS **30**, the indication as to whether user **12** is authorized to receive an indication of the location of user **14**.

In an example embodiment, ALFS **30** may query, at step **44**, CNR **32** for information from the profile of user **12**. CNR **32** may retrieve the profile information and, at step **48**, provide, at step **48**, the profile information to ALFS **30**. Responsive to receiving the profile information, ALFS **30** may analyze the received profile information to determine whether user **12** is authorized to receive an indication of the location of user **14**.

In an example embodiment, ALFS **30** may determine if the provider of the text message (e.g., user **12**) is authorized to receive an indication of the location of the person of

interest (e.g., user **14**). ALFS may query, at step **44**, consolidated network repository (CNR) **32** for information from a profile of the person of interest (e.g., user's **14** profile). In an example embodiment, ALFS **30** may query CNR **32** for an indication as to whether user **12** is authorized to receive an indication of the location of user **14**. CNR **32** may retrieve the profile of user **14**, and upon analysis thereof, determine whether user **12** is authorized to receive an indication of the location of user **14**. And, at step **48**, CNR **48** may provide to ALFS **30**, the indication as to whether user **12** is authorized to receive an indication of the location of user **14**.

In an example embodiment, ALFS **30** may query, at step **44**, CNR **32** for information from the profile of user **14**. CNR **32** may retrieve the profile information and, at step **48**, provide, at step **48**, the profile information to ALFS **30**. Responsive to receiving the profile information, ALFS **30** may analyze the received profile information to determine whether user **12** is authorized to receive an indication of the location of user **14**.

Upon a determination that the location code is valid and that user **12** is authorized to receive an indication of the location of user **14**, ALFS **30** may provide a message to device **18**, informing device **18** that is location is being determined, requesting device **18** to update its location information, or any appropriate combination thereof. In an example embodiment, this message may be sent to device **18** from ALFS **30** via SMSC **22**, MSC **24**, and RAN **52**, at step **54**, step **56**, step **58**, and step **60**. Responsive to receiving the message (received by device **18** at step **60**), may autonomously determine is location. For example, device **18** may determine its location via autonomous GPS and send an indication of its location to the gateway mobile location center (GMLC) **28** and/or serving mobile location center (SMLC) **26**), at step **62**, step **64**, and/or step **66**. Device **18** may send an acknowledgment message to ALFS **30** indicating that the location of device **18** has been determined/updated. In an example embodiment, the acknowledgement message may comprise an indication of the location of the device **18**, the acknowledgement message may comprise an indication that the location of the device **18** has been stored in GMLC **28** and/or SMLC **26**, or any appropriate combination thereof. Device **18** may provide the acknowledgment message to ALFS **30** via RAN **52**, MSC **24**, SMSC **22**, at step **68**, step **70**, step **72**, and step **74**.

Responsive to receiving the acknowledgement message at step **74**, ALFS **30** may query GMLC **28** at step **76**, may query SMLC **26** at step **78**, or any appropriate combination thereof, to obtain an indication of the location of device **18**. GMLC **28** may respond to the query with an indication of the location of device **18** at step **80**, SMLC **26** may respond to the query with an indication of the location of device **18** at step **82**, or any appropriate combination thereof.

In an example embodiment, if device **18** is not capable of determining its location (e.g., does not comprise GPS receiver, etc.), device **18** may acknowledge receipt of the message received at step **60**, wherein the acknowledgement may include an indication that device **18** is incapable of determining its location. Upon receipt of the acknowledgement message, any appropriate entity in the network may initiate a determination of the location of device **18**. The location may be determined in any appropriate manner, such as, for example, via any type of location determination system including, the Global Positioning System (GPS), assisted GPS (A-GPS), time difference of arrival calculations, configured constant location (in the case of non-moving devices), any combination thereof, or any other appropriate means.

In an example embodiment, if device **18** is not capable of determining its location, device **18** may provide the acknowledgment message to ALFS **30** via RAN **52**, MSC **24**, SMSC **22**, at step **68**, step **70**, step **72**, and step **74**. Responsive to receiving the acknowledgement message at step **74**, ALFS **30** may initiate a determination of the location of device **18** as described above.

Responsive to receiving an indication of the location of device **18**, ALFS **30** may provide the indication of the location of device **18** to device **16**. In an example embodiment, the ALFS **30** may provide the indication of the location of device **18** to device **16** via SMSC **22** and MSC **20** at step **84**, step **86**, and step **88**.

Device **16** may render the indication of the location of device **14** in any appropriate manner. For example, the location of device **18** may be rendered visually, audibly, hapticly (e.g., vibration), or any appropriate combination thereof. In an example embodiment, the location of device may be rendered on a map or the like. The location of device **16** also may be rendered on the map. The location of device **16** and the location of device **18** may be maintained and tracked, and rendered on the map, thus indicating the relative spatial relationship (e.g., distance and direction) between device **16** and device **18**.

FIG. **2** is a block diagram of an example device **81** that may be utilized to facilitate locating a device via a text message as described herein. The device **81** may comprise and/or be incorporated into any appropriate device, examples of which may include a device **16**, device **18**, a mobile device, a mobile communications device, a cellular phone, a portable computing device, such as a laptop, a personal digital assistant ("PDA"), a portable phone (e.g., a cell phone or the like, a smart phone, a video phone), a portable email device, a portable gaming device, a TV, a DVD player, portable media player, (e.g., a portable music player, such as an MP3 player, a Walkman, etc.), a portable navigation device (e.g., GPS compatible device, A-GPS compatible device, etc.), or a combination thereof. The device **81** can include devices that are not typically thought of as portable, such as, for example, a public computing device, a navigation device installed in-vehicle, a set top box, or the like. The mobile device **81** can include non-conventional computing devices, such as, for example, a kitchen appliance, a motor vehicle control (e.g., steering wheel), etc., or the like. As evident from the herein description, a device, a communications device, or a mobile device is not to be construed as software per se.

The device **81** may include any appropriate device, mechanism, software, and/or hardware for locating a device via a text message as described herein. In an example embodiment, the ability to locate a device via a text message is a feature of the device **81** that can be turned on and off. Thus, in an example embodiment, an owner and/or user of the device **81** may opt-in or opt-out of this capability.

In an example embodiment, the device **81** may comprise a processor and memory coupled to the processor. The memory may comprise executable instructions that when executed by the processor cause the processor to effectuate operations associated with locating a device via a text message as described herein.

In an example configuration, the device **81** may comprise a processing portion **83**, a memory portion **85**, an input/output portion **87**, and a user interface (UI) portion **89**. Each portion of the device **81** may comprise circuitry for performing functions associated with each respective portion. Thus, each portion may comprise hardware, or a combination of hardware and software. Accordingly, each portion of

the device **81** is not to be construed as software per se. It is emphasized that the block diagram depiction of device **81** is exemplary and not intended to imply a specific implementation and/or configuration. For example, in an example configuration, the device **81** may comprise a cellular communications technology and the processing portion **83** and/or the memory portion **85** may be implemented, in part or in total, on a subscriber identity module (SIM) of the device **81**. In another example configuration, the device **81** may comprise a laptop computer. The laptop computer may include a SIM, and various portions of the processing portion **83** and/or the memory portion **85** may be implemented on the SIM, on the laptop other than the SIM, or any combination thereof.

The processing portion **83**, memory portion **85**, and input/output portion **87** may be coupled together to allow communications therebetween. In various embodiments, the input/output portion **87** may comprise a receiver of the device **81**, a transmitter of the device **81**, or a combination thereof. The input/output portion **87** may be capable of receiving and/or providing information pertaining to discovering, negotiating, sharing, and/or exchanging information and/or capabilities as described herein. In various configurations, the input/output portion **87** may receive and/or provide information via any appropriate means, such as, for example, optical means (e.g., infrared), electromagnetic means (e.g., RF, WI-FI, BLUETOOTH, ZIGBEE, etc.), acoustic means (e.g., speaker, microphone, ultrasonic receiver, ultrasonic transmitter), or a combination thereof.

The processing portion **83** may be capable of performing functions pertaining to locating a device via a text message as described herein. In a basic configuration, the device **81** may include at least one memory portion **85**. The memory portion **85** may comprise a storage medium having a concrete, tangible, physical structure. Thus, the memory portion **85**, as well as any computer-readable storage medium described herein, is not to be construed as a transient signal per se. Further, the memory portion **85**, as well as any computer-readable storage medium described herein, is not to be construed as a propagating signal per se. The memory portion **85**, as well as any computer-readable storage medium described herein, is to be construed as an article of manufacture. The memory portion **85** may store any information utilized in conjunction with locating a device via a text message as described herein. Depending upon the exact configuration and type of processor, the memory portion **85** may be volatile (such as some types of RAM), non-volatile (such as ROM, flash memory, etc.), or a combination thereof. The mobile device **81** may include additional storage (e.g., removable storage and/or non-removable storage) including, but not limited to, tape, flash memory, smart cards, CD-ROM, digital versatile disks (DVD) or other optical storage, magnetic cassettes, magnetic tape, magnetic disk storage or other magnetic storage devices, universal serial bus (USB) compatible memory, or any other medium which can be used to store information and which can be accessed by the mobile device **81**.

The device **81** also may contain a user interface (UI) portion **89** allowing a user to communicate with the device **81**. The UI portion **89** may be capable of rendering any information utilized in conjunction with locating a device via a text message as described herein. The UI portion **89** may provide the ability to control the device **81**, via, for example, buttons, soft keys, voice actuated controls, a touch screen, movement of the mobile device **81**, visual cues (e.g., moving a hand in front of a camera on the mobile device **81**), or the like. The UI portion **89** may provide visual information (e.g., via a display), audio information (e.g., via speaker), mechanically (e.g., via a vibrating mechanism), or a combination thereof. In various configurations, the UI portion **89** may comprise a display, a touch screen, a keyboard, an accelerometer, a motion detector, a speaker, a microphone, a camera, a tilt sensor, or any combination thereof. The UI portion **89** may comprise means for inputting biometric information, such as, for example, fingerprint information, retinal information, voice information, and/or facial characteristic information.

The UI portion **89** may include a display for displaying multimedia such as, for example, application graphical user interfaces (GUIs), text, images, video, telephony functions such as Caller ID data, setup functions, menus, music, metadata, messages, wallpaper, graphics, Internet content, device status, preferences settings, map and location data, routes and other directions, points of interest (POI), and the like.

In some embodiments, the UI portion may comprise a user interface (UI) application. The UI application may interface with a client or operating system (OS) to, for example, facilitate user interaction with device functionality and data. The UI application may aid a user in entering message content, viewing received messages, answering/initiating calls, entering/deleting data, entering and setting user IDs and passwords, configuring settings, manipulating content and/or settings, interacting with other applications, or the like, and may aid the user in inputting selections associated with discovering, negotiating, sharing, and/or exchanging information and/or capabilities as described herein.

FIG. **3** is a block diagram of another example device **90** that may be utilized to locating a device via a text message as described herein. The device **90** may comprise hardware or a combination of hardware and software. In an example embodiment, the device **90** may comprise a network entity and when used in conjunction with a network, the functionality needed to facilitate locating a device via a text message as described herein may reside in any one or combination of devices. The device **90** depicted in FIG. **3** may represent any appropriate network entity, or combination of network entities, such as, for example, a component or various components of a cellular broadcast system wireless network, a processor, a server, a gateway, a node, a MSC, a SMSC, an ALFS, a GMLC, a RAN, a SMLC, MSC **20**, SMSC **22**, MSC **24**, RAN **52**, SMLC **26**, GMLC **28**, ALFS **30**, or any appropriate combination thereof. It is emphasized that the block diagram depicted in FIG. **3** is exemplary and not intended to imply a specific implementation or configuration. Thus, the device **90** may be implemented in a single device or multiple devices (e.g., single server or multiple servers, single gateway or multiple gateways, etc.). Multiple network entities may be distributed or centrally located. Multiple network entities may communicate wirelessly, via hard wire, or any appropriate combination thereof.

In an example embodiment, the device **90** may comprise a processor and memory coupled to the processor. The memory may comprise executable instructions that when executed by the processor cause the processor to effectuate operations associated with locating a device via a text message as described herein. As evident from the herein description the device **90** is not to be construed as software per se.

In an example configuration, the device **90** may comprise a processing portion **92**, a memory portion **94**, and an input/output portion **96**. The processing portion **92**, memory portion **94**, and input/output portion **96** may be coupled

together (coupling not shown in FIG. **3**) to allow communications therebetween. Each portion of the device **90** may comprise circuitry for performing functions associated with each respective portion. Thus, each portion may comprise hardware, or a combination of hardware and software. Accordingly, each portion of the device **90** is not to be construed as software per se. The input/output portion **96** may be capable of receiving and/or providing information from/to a communications device and/or other network entities configured for locating a device via a text message as described herein. For example, the input/output portion **96** may include a wireless communications (e.g., 2.5G/3G/4G/GPS) card. The input/output portion **96** may be capable of receiving and/or sending video information, audio information, control information, image information, data, or any combination thereof. In an example embodiment, the input/output portion **96** may be capable of receiving and/or sending information to determine a location of the device **90** and/or the communications device **90**. In an example configuration, the input\output portion **96** may comprise a GPS receiver. In an example configuration, the device **90** may determine its own geographical location and/or the geographical location of a communications device through any type of location determination system including, for example, the Global Positioning System (GPS), assisted GPS (A-GPS), time difference of arrival calculations, configured constant location (in the case of non-moving devices), any combination thereof, or any other appropriate means. In various configurations, the input/output portion **96** may receive and/or provide information via any appropriate means, such as, for example, optical means (e.g., infrared), electromagnetic means (e.g., RF, WI-FI, BLUETOOTH, ZIGBEE, etc.), acoustic means (e.g., speaker, microphone, ultrasonic receiver, ultrasonic transmitter), or a combination thereof. In an example configuration, the input/output portion may comprise a WIFI finder, a two way GPS chipset or equivalent, or the like, or a combination thereof.

The processing portion **92** may be capable of performing functions associated with locating a device via a text message as described herein. For example, the processing portion **92** may be capable of, in conjunction with any other portion of the device **90**, installing an application for locating a device via a text message as described herein.

In a basic configuration, the device **90** may include at least one memory portion **94**. The memory portion **94** may comprise a storage medium having a concrete, tangible, physical structure. Thus, the memory portion **94**, as well as any computer-readable storage medium described herein, is not to be construed as a transient signal per se. The memory portion **94**, as well as any computer-readable storage medium described herein, is not to be construed as a propagating signal per se. The memory portion **94**, as well as any computer-readable storage medium described herein, is to be construed as an article of manufacture. The memory portion **94** may store any information utilized in conjunction with locating a device via a text message as described herein. Depending upon the exact configuration and type of processor, the memory portion **94** may be volatile **98** (such as some types of RAM), non-volatile **100** (such as ROM, flash memory, etc.), or a combination thereof. The device **90** may include additional storage (e.g., removable storage **102** and/or non-removable storage **104**) including, for example, tape, flash memory, smart cards, CD-ROM, digital versatile disks (DVD) or other optical storage, magnetic cassettes, magnetic tape, magnetic disk storage or other magnetic storage devices, universal serial bus (USB) compatible memory, or any other medium which can be used to store information and which can be accessed by the device **90**.

The device **90** also may contain communications connection(s) **110** that allow the device **90** to communicate with other devices, network entities, or the like. A communications connection(s) may comprise communication media. Communication media typically embody computer readable instructions, data structures, program modules or other data in a modulated data signal such as a carrier wave or other transport mechanism and includes any information delivery media. By way of example, and not limitation, communication media may include wired media such as a wired network or direct-wired connection, and wireless media such as acoustic, RF, infrared, and other wireless media. The term computer readable media as used herein includes both storage media and communication media. The device **90** also may include input device(s) **106** such as keyboard, mouse, pen, voice input device, touch input device, etc. Output device(s) **108** such as a display, speakers, printer, etc. also may be included.

A device, or devices, as described herein may be part of and/or communicate with various wireless communications networks. Some of which are described below.

FIG. **4** is a diagram of an example communications system in which locating a device via a text message as described herein may be implemented. The communications system **100** may be a multiple access system that provides content, such as voice, data, video, messaging, broadcast, etc., to multiple wireless users. The communications system **100** may enable multiple wireless users to access such content through the sharing of system resources, including wireless bandwidth. For example, the communications systems **100** may employ one or more channel access methods, such as code division multiple access (CDMA), time division multiple access (TDMA), frequency division multiple access (FDMA), orthogonal FDMA (OFDMA), single-carrier FDMA (SC-FDMA), and the like. A communications system such as that shown in FIG. **4** may also be referred to herein as a network.

As shown in FIG. **4**, the communications system **100** may include wireless transmit/receive units (WTRUs) **102***a*, **102***b*, **102***c*, **102***d*, a radio access network (RAN) **104**, a core network **106**, a public switched telephone network (PSTN) **108**, the Internet **110**, and other networks **112**, though it will be appreciated that the disclosed embodiments contemplate any number of WTRUs, base stations, networks, and/or network elements. Each of the WTRUs **102***a*, **102***b*, **102***c*, **102***d* may be any type of device configured to operate and/or communicate in a wireless environment. For example, a WTRU may comprise network entity **12**, network entity **26**, a UE, or the like, or any combination thereof. By way of example, the WTRUs **102***a*, **102***b*, **102***c*, **102***d* may be configured to transmit and/or receive wireless signals and may include user equipment (UE), a mobile station, a mobile device, a fixed or mobile subscriber unit, a pager, a cellular telephone, a personal digital assistant (PDA), a smartphone, a laptop, a netbook, a personal computer, a wireless sensor, consumer electronics, and the like.

The communications systems **100** may also include a base station **114***a* and a base station **114***b*. Each of the base stations **114***a*, **114***b* may be any type of device configured to wirelessly interface with at least one of the WTRUs **102***a*, **102***b*, **102***c*, **102***d* to facilitate access to one or more communication networks, such as the core network **106**, the Internet **110**, and/or the networks **112**. By way of example, the base stations **114***a*, **114***b* may be a base transceiver station (BTS), a Node-B, an eNode B, a Home Node B, a

Home eNode B, a site controller, an access point (AP), a wireless router, and the like. While the base stations **114***a*, **114***b* are each depicted as a single element, it will be appreciated that the base stations **114***a*, **114***b* may include any number of interconnected base stations and/or network elements.

The base station **114***a* may be part of the RAN **104**, which may also include other base stations and/or network elements (not shown), such as a base station controller (BSC), a radio network controller (RNC), relay nodes, etc. The base station **114***a* and/or the base station **114***b* may be configured to transmit and/or receive wireless signals within a particular geographic region, which may be referred to as a cell (not shown). The cell may further be divided into cell sectors. For example, the cell associated with the base station **114***a* may be divided into three sectors. Thus, in an embodiment, the base station **114***a* may include three transceivers, i.e., one for each sector of the cell. In another embodiment, the base station **114***a* may employ multiple-input multiple output (MIMO) technology and, therefore, may utilize multiple transceivers for each sector of the cell.

The base stations **114***a*, **114***b* may communicate with one or more of the WTRUs **102***a*, **102***b*, **102***c*, **102***d* over an air interface **116**, which may be any suitable wireless communication link (e.g., radio frequency (RF), microwave, infrared (IR), ultraviolet (UV), visible light, etc.). The air interface **116** may be established using any suitable radio access technology (RAT).

More specifically, as noted above, the communications system **100** may be a multiple access system and may employ one or more channel access schemes, such as CDMA, TDMA, FDMA, OFDMA, SC-FDMA, and the like. For example, the base station **114***a* in the RAN **104** and the WTRUs **102***a*, **102***b*, **102***c* may implement a radio technology such as Universal Mobile Telecommunications System (UMTS) Terrestrial Radio Access (UTRA) that may establish the air interface **116** using wideband CDMA (WCDMA). WCDMA may include communication protocols such as High-Speed Packet Access (HSPA) and/or Evolved HSPA (HSPA+). HSPA may include High-Speed Downlink Packet Access (HSDPA) and/or High-Speed Uplink Packet Access (HSUPA).

In another embodiment, the base station **114***a* and the WTRUs **102***a*, **102***b*, **102***c* may implement a radio technology such as Evolved UMTS Terrestrial Radio Access (E-UTRA), which may establish the air interface **116** using Long Term Evolution (LTE) and/or LTE-Advanced (LTE-A).

In other embodiments, the base station **114***a* and the WTRUs **102***a*, **102***b*, **102***c* may implement radio technologies such as IEEE 802.16 (i.e., Worldwide Interoperability for Microwave Access (WiMAX)), CDMA2000, CDMA2000 1x, CDMA2000 EV-DO, Interim Standard 2000 (IS-2000), Interim Standard 95 (IS-95), Interim Standard 856 (IS-856), Global System for Mobile communications (GSM), Enhanced Data rates for GSM Evolution (EDGE), GSM EDGE (GERAN), and the like.

The base station **114***b* in FIG. **4** may be a wireless router, Home Node B, Home eNode B, or access point, for example, and may utilize any suitable RAT for facilitating wireless connectivity in a localized area, such as a place of business, a home, a vehicle, a campus, and the like. In one embodiment, the base station **114***b* and the WTRUs **102***c*, **102***d* may implement a radio technology such as IEEE 802.11 to establish a wireless local area network (WLAN). In another embodiment, the base station **114***b* and the WTRUs **102***c*, **102***d* may implement a radio technology such as IEEE 802.15 to establish a wireless personal area network (WPAN). In yet another embodiment, the base station **114***b* and the WTRUs **102***c*, **102***d* may utilize a cellular-based RAT (e.g., WCDMA, CDMA2000, GSM, LTE, LTE-A, etc.) to establish a picocell or femtocell. As shown in FIG. **4**, the base station **114***b* may have a direct connection to the Internet **110**. Thus, the base station **114***b* may not be required to access the Internet **110** via the core network **106**.

The RAN **104** may be in communication with the core network **106**, which may be any type of network configured to provide voice, data, applications, and/or voice over internet protocol (VoIP) services to one or more of the WTRUs **102***a*, **102***b*, **102***c*, **102***d*. For example, the core network **106** may provide call control, billing services, mobile location-based services, pre-paid calling, Internet connectivity, video distribution, etc., and/or perform high-level security functions, such as user authentication. Although not shown in FIG. **4**, it will be appreciated that the RAN **104** and/or the core network **106** may be in direct or indirect communication with other RANs that employ the same RAT as the RAN **104** or a different RAT. For example, in addition to being connected to the RAN **104**, which may be utilizing an E-UTRA radio technology, the core network **106** may also be in communication with another RAN (not shown) employing a GSM radio technology.

The core network **106** may also serve as a gateway for the WTRUs **102***a*, **102***b*, **102***c*, **102***d* to access the PSTN **108**, the Internet **110**, and/or other networks **112**. The PSTN **108** may include circuit-switched telephone networks that provide plain old telephone service (POTS). The Internet **110** may include a global system of interconnected computer networks and devices that use common communication protocols, such as the transmission control protocol (TCP), user datagram protocol (UDP) and the internet protocol (IP) in the TCP/IP internet protocol suite. The networks **112** may include wired or wireless communications networks owned and/or operated by other service providers. For example, the networks **112** may include another core network connected to one or more RANs, which may employ the same RAT as the RAN **104** or a different RAT.

Some or all of the WTRUs **102***a*, **102***b*, **102***c*, **102***d* in the communications system **100** may include multi-mode capabilities, i.e., the WTRUs **102***a*, **102***b*, **102***c*, **102***d* may include multiple transceivers for communicating with different wireless networks over different wireless links. For example, the WTRU **102***c* shown in FIG. **4** may be configured to communicate with the base station **114***a*, which may employ a cellular-based radio technology, and with the base station **114***b*, which may employ an IEEE 802 radio technology.

FIG. **5** is a system diagram of an example WTRU **102** which may be utilized to facilitate locating a device via a text message. As shown in FIG. **5**, the WTRU **102** may include a processor **118**, a transceiver **120**, a transmit/receive element **122**, a speaker/microphone **124**, a keypad **126**, a display/touchpad **128**, non-removable memory **130**, removable memory **132**, a power source **134**, a global positioning system (GPS) chipset **136**, and other peripherals **138**. It will be appreciated that the WTRU **102** may include any sub-combination of the foregoing elements while remaining consistent with an embodiment.

The processor **118** may be a general purpose processor, a special purpose processor, a conventional processor, a digital signal processor (DSP), a plurality of microprocessors, one or more microprocessors in association with a DSP core, a controller, a microcontroller, Application Specific Integrated Circuits (ASICs), Field Programmable Gate Array

(FPGAs) circuits, any other type of integrated circuit (IC), a state machine, and the like. The processor **118** may perform signal coding, data processing, power control, input/output processing, and/or any other functionality that enables the WTRU **102** to operate in a wireless environment. The processor **118** may be coupled to the transceiver **120**, which may be coupled to the transmit/receive element **122**. While FIG. **8** depicts the processor **118** and the transceiver **120** as separate components, it will be appreciated that the processor **118** and the transceiver **120** may be integrated together in an electronic package or chip.

The transmit/receive element **122** may be configured to transmit signals to, or receive signals from, a base station (e.g., the base station **114***a*) over the air interface **116**. For example, in one embodiment, the transmit/receive element **122** may be an antenna configured to transmit and/or receive RF signals. In another embodiment, the transmit/receive element **122** may be an emitter/detector configured to transmit and/or receive IR, UV, or visible light signals, for example. In yet another embodiment, the transmit/receive element **122** may be configured to transmit and receive both RF and light signals. It will be appreciated that the transmit/receive element **122** may be configured to transmit and/or receive any combination of wireless signals.

In addition, although the transmit/receive element **122** is depicted in FIG. **5** as a single element, the WTRU **102** may include any number of transmit/receive elements **122**. More specifically, the WTRU **102** may employ MIMO technology. Thus, in one embodiment, the WTRU **102** may include two or more transmit/receive elements **122** (e.g., multiple antennas) for transmitting and receiving wireless signals over the air interface **116**.

The transceiver **120** may be configured to modulate the signals that are to be transmitted by the transmit/receive element **122** and to demodulate the signals that are received by the transmit/receive element **122**. As noted above, the WTRU **102** may have multi-mode capabilities. Thus, the transceiver **120** may include multiple transceivers for enabling the WTRU **102** to communicate via multiple RATs, such as UTRA and IEEE 802.11, for example.

The processor **118** of the WTRU **102** may be coupled to, and may receive user input data from, the speaker/microphone **124**, the keypad **126**, and/or the display/touchpad **128** (e.g., a liquid crystal display (LCD) display unit or organic light-emitting diode (OLED) display unit). The processor **118** may also output user data to the speaker/microphone **124**, the keypad **126**, and/or the display/touchpad **128**. In addition, the processor **118** may access information from, and store data in, any type of suitable memory, such as the non-removable memory **130** and/or the removable memory **132**. The non-removable memory **130** may include random-access memory (RAM), read-only memory (ROM), a hard disk, or any other type of memory storage device. The removable memory **132** may include a subscriber identity module (SIM) card, a memory stick, a secure digital (SD) memory card, and the like. In other embodiments, the processor **118** may access information from, and store data in, memory that is not physically located on the WTRU **102**, such as on a server or a home computer (not shown).

The processor **118** may receive power from the power source **134**, and may be configured to distribute and/or control the power to the other components in the WTRU **102**. The power source **134** may be any suitable device for powering the WTRU **102**. For example, the power source **134** may include one or more dry cell batteries (e.g., nickel-cadmium (NiCd), nickel-zinc (NiZn), nickel metal hydride (NiMH), lithium-ion (Li-ion), etc.), solar cells, fuel cells, and the like.

The processor **118** may also be coupled to the GPS chipset **136**, which may be configured to provide location information (e.g., longitude and latitude) regarding the current location of the WTRU **102**. In addition to, or in lieu of, the information from the GPS chipset **136**, the WTRU **102** may receive location information over the air interface **116** from a base station (e.g., base stations **114***a*, **114***b*) and/or determine its location based on the timing of the signals being received from two or more nearby base stations. It will be appreciated that the WTRU **102** may acquire location information by way of any suitable location-determination method while remaining consistent with an embodiment.

The processor **118** may further be coupled to other peripherals **138**, which may include one or more software and/or hardware modules that provide additional features, functionality and/or wired or wireless connectivity. For example, the peripherals **138** may include an accelerometer, an e-compass, a satellite transceiver, a digital camera (for photographs or video), a universal serial bus (USB) port, a vibration device, a television transceiver, a hands free headset, a Bluetooth® module, a frequency modulated (FM) radio unit, a digital music player, a media player, a video game player module, an Internet browser, and the like.

FIG. **6** is an example system diagram of RAN **104** and a core network **106**. As noted above, the RAN **104** may employ an E-UTRA radio technology to communicate with the WTRUs **102***a*, **102***b*, and **102***c* over the air interface **116**. The RAN **104** may also be in communication with the core network **106**.

The RAN **104** may include eNode-Bs **140***a*, **140***b*, **140***c*, though it will be appreciated that the RAN **104** may include any number of eNode-Bs while remaining consistent with an embodiment. The eNode-Bs **140***a*, **140***b*, **140***c* may each include one or more transceivers for communicating with the WTRUs **102***a*, **102***b*, **102***c* over the air interface **116**. In one embodiment, the eNode-Bs **140***a*, **140***b*, **140***c* may implement MIMO technology. Thus, the eNode-B **140***a*, for example, may use multiple antennas to transmit wireless signals to, and receive wireless signals from, the WTRU **102***a*.

Each of the eNode-Bs **140***a*, **140***b*, and **140***c* may be associated with a particular cell (not shown) and may be configured to handle radio resource management decisions, handover decisions, scheduling of users in the uplink and/or downlink, and the like. As shown in FIG. **6**, the eNode-Bs **140***a*, **140***b*, **140***c* may communicate with one another over an X2 interface.

The core network **106** shown in FIG. **6** may include a mobility management gateway or entity (MME) **142**, a serving gateway **144**, and a packet data network (PDN) gateway **146**. While each of the foregoing elements are depicted as part of the core network **106**, it will be appreciated that any one of these elements may be owned and/or operated by an entity other than the core network operator.

The MME **142** may be connected to each of the eNode-Bs **140***a*, **140***b*, **140***c* in the RAN **104** via an S1 interface and may serve as a control node. For example, the MME **142** may be responsible for authenticating users of the WTRUs **102***a*, **102***b*, **102***c*, bearer activation/deactivation, selecting a particular serving gateway during an initial attach of the WTRUs **102***a*, **102***b*, **102***c*, and the like. The MME **142** may also provide a control plane function for switching between the RAN **104** and other RANs (not shown) that employ other radio technologies, such as GSM or WCDMA.

The serving gateway **144** may be connected to each of the eNode-Bs **140***a*, **140***b*, and **140***c* in the RAN **104** via the S1 interface. The serving gateway **144** may generally route and forward user data packets to/from the WTRUs **102***a*, **102***b*, **102***c*. The serving gateway **144** may also perform other functions, such as anchoring user planes during inter-eNode B handovers, triggering paging when downlink data is available for the WTRUs **102***a*, **102***b*, **102***c*, managing and storing contexts of the WTRUs **102***a*, **102***b*, **102***c*, and the like.

The serving gateway **144** may also be connected to the PDN gateway **146**, which may provide the WTRUs **102***a*, **102***b*, **102***c* with access to packet-switched networks, such as the Internet **110**, to facilitate communications between the WTRUs **102***a*, **102***b*, **102***c* and IP-enabled devices.

The core network **106** may facilitate communications with other networks. For example, the core network **106** may provide the WTRUs **102***a*, **102***b*, **102***c* with access to circuit-switched networks, such as the PSTN **108**, to facilitate communications between the WTRUs **102***a*, **102***b*, **102***c* and traditional land-line communications devices. For example, the core network **106** may include, or may communicate with, an IP gateway (e.g., an IP multimedia subsystem (IMS) server) that serves as an interface between the core network **106** and the PSTN **108**. In addition, the core network **106** may provide the WTRUs **102***a*, **102***b*, **102***c* with access to the networks **112**, which may include other wired or wireless networks that are owned and/or operated by other service providers.

FIG. **7** depicts an overall block diagram of an example packet-based mobile cellular network environment, such as a GPRS network, within which locating a device via a text message as described herein may be implemented. In the example packet-based mobile cellular network environment shown in FIG. **7**, there are a plurality of Base Station Subsystems ("BSS") **800** (only one is shown), each of which comprises a Base Station Controller ("BSC") **802** serving a plurality of Base Transceiver Stations ("BTS") such as BTSs **804**, **806**, and **808**. BTSs **804**, **806**, **808**, etc. are the access points where users of packet-based mobile devices become connected to the wireless network. In example fashion, the packet traffic originating from user devices is transported via an over-the-air interface to a BTS **808**, and from the BTS **808** to the BSC **802**. Base station subsystems, such as BSS **800**, are a part of internal frame relay network **810** that can include Service GPRS Support Nodes ("SGSN") such as SGSN **812** and **814**. Each SGSN is connected to an internal packet network **820** through which a SGSN **812**, **814**, etc. can route data packets to and from a plurality of gateway GPRS support nodes (GGSN) **822**, **824**, **826**, etc. As illustrated, SGSN **814** and GGSNs **822**, **824**, and **826** are part of internal packet network **820**. Gateway GPRS serving nodes **822**, **824** and **826** mainly provide an interface to external Internet Protocol ("IP") networks such as Public Land Mobile Network ("PLMN") **850**, corporate intranets **840**, or Fixed-End System ("FES") or the public Internet **830**. As illustrated, subscriber corporate network **840** may be connected to GGSN **824** via firewall **832**; and PLMN **850** is connected to GGSN **824** via boarder gateway router **834**. The Remote Authentication Dial-In User Service ("RADIUS") server **842** may be used for caller authentication when a user of a mobile cellular device calls corporate network **840**.

Generally, there can be a several cell sizes in a GSM network, referred to as macro, micro, pico, femto and umbrella cells. The coverage area of each cell is different in different environments. Macro cells can be regarded as cells in which the base station antenna is installed in a mast or a building above average roof top level. Micro cells are cells whose antenna height is under average roof top level. Micro-cells are typically used in urban areas. Pico cells are small cells having a diameter of a few dozen meters. Pico cells are used mainly indoors. Femto cells have the same size as pico cells, but a smaller transport capacity. Femto cells are used indoors, in residential, or small business environments. On the other hand, umbrella cells are used to cover shadowed regions of smaller cells and fill in gaps in coverage between those cells.

FIG. **8** illustrates an architecture of a typical GPRS network within which locating a device via a text message as described herein may be implemented and/or communicate with. The architecture depicted in FIG. **8** may be segmented into four groups: users **950**, radio access network **960**, core network **970**, and interconnect network **980**. Users **950** comprise a plurality of end users. Note, device **912** is referred to as a mobile subscriber in the description of network shown in FIG. **8**. In an example embodiment, the device depicted as mobile subscriber **912** comprises a communications device (e.g., communications device **160**). Radio access network **960** comprises a plurality of base station subsystems such as BSSs **962**, which include BTSs **964** and BSCs **966**. Core network **970** comprises a host of various network elements. As illustrated in FIG. **8**, core network **970** may comprise Mobile Switching Center ("MSC") **971**, Service Control Point ("SCP") **972**, gateway MSC **973**, SGSN **976**, Home Location Register ("HLR") **974**, Authentication Center ("AuC") **975**, Domain Name Server ("DNS") **977**, and GGSN **978**. Interconnect network **980** also comprises a host of various networks and other network elements. As illustrated in FIG. **8**, interconnect network **980** comprises Public Switched Telephone Network ("PSTN") **982**, Fixed-End System ("FES") or Internet **984**, firewall **988**, and Corporate Network **989**.

A mobile switching center can be connected to a large number of base station controllers. At MSC **971**, for instance, depending on the type of traffic, the traffic may be separated in that voice may be sent to Public Switched Telephone Network ("PSTN") **982** through Gateway MSC ("GMSC") **973**, and/or data may be sent to SGSN **976**, which then sends the data traffic to GGSN **978** for further forwarding.

When MSC **971** receives call traffic, for example, from BSC **966**, it sends a query to a database hosted by SCP **972**. The SCP **972** processes the request and issues a response to MSC **971** so that it may continue call processing as appropriate.

The HLR **974** is a centralized database for users to register to the GPRS network. HLR **974** stores static information about the subscribers such as the International Mobile Subscriber Identity ("IMSI"), subscribed services, and a key for authenticating the subscriber. HLR **974** also stores dynamic subscriber information such as the current location of the mobile subscriber. Associated with HLR **974** is AuC **975**. AuC **975** is a database that contains the algorithms for authenticating subscribers and includes the associated keys for encryption to safeguard the user input for authentication.

In the following, depending on context, the term "mobile subscriber" sometimes refers to the end user and sometimes to the actual portable device, such as a mobile device, used by an end user of the mobile cellular service. When a mobile subscriber turns on his or her mobile device, the mobile device goes through an attach process by which the mobile device attaches to an SGSN of the GPRS network. In FIG. **8**, when mobile subscriber **912** initiates the attach process by

turning on the network capabilities of the mobile device, an attach request is sent by mobile subscriber **912** to SGSN **976**. The SGSN **976** queries another SGSN, to which mobile subscriber **912** was attached before, for the identity of mobile subscriber **912**. Upon receiving the identity of mobile subscriber **912** from the other SGSN, SGSN **976** requests more information from mobile subscriber **912**. This information is used to authenticate mobile subscriber **912** to SGSN **976** by HLR **974**. Once verified, SGSN **976** sends a location update to HLR **974** indicating the change of location to a new SGSN, in this case SGSN **976**. HLR **974** notifies the old SGSN, to which mobile subscriber **912** was attached before, to cancel the location process for mobile subscriber **912**. HLR **974** then notifies SGSN **976** that the location update has been performed. At this time, SGSN **976** sends an Attach Accept message to mobile subscriber **912**, which in turn sends an Attach Complete message to SGSN **976**.

After attaching itself with the network, mobile subscriber **912** then goes through the authentication process. In the authentication process, SGSN **976** sends the authentication information to HLR **974**, which sends information back to SGSN **976** based on the user profile that was part of the user's initial setup. The SGSN **976** then sends a request for authentication and ciphering to mobile subscriber **912**. The mobile subscriber **912** uses an algorithm to send the user identification (ID) and password to SGSN **976**. The SGSN **976** uses the same algorithm and compares the result. If a match occurs, SGSN **976** authenticates mobile subscriber **912**.

Next, the mobile subscriber **912** establishes a user session with the destination network, corporate network **989**, by going through a Packet Data Protocol ("PDP") activation process. Briefly, in the process, mobile subscriber **912** requests access to the Access Point Name ("APN"), for example, UPS.com, and SGSN **976** receives the activation request from mobile subscriber **912**. SGSN **976** then initiates a Domain Name Service ("DNS") query to learn which GGSN node has access to the UPS.com APN. The DNS query is sent to the DNS server within the core network **970**, such as DNS **977**, which is provisioned to map to one or more GGSN nodes in the core network **970**. Based on the APN, the mapped GGSN **978** can access the requested corporate network **989**. The SGSN **976** then sends to GGSN **978** a Create Packet Data Protocol ("PDP") Context Request message that contains necessary information. The GGSN **978** sends a Create PDP Context Response message to SGSN **976**, which then sends an Activate PDP Context Accept message to mobile subscriber **912**.

Once activated, data packets of the call made by mobile subscriber **912** can then go through radio access network **960**, core network **970**, and interconnect network **980**, in a particular fixed-end system or Internet **984** and firewall **988**, to reach corporate network **989**.

FIG. **9** illustrates an example block diagram view of a GSM/GPRS/IP multimedia network architecture within which locating a device via a text message as described herein may be implemented. As illustrated, the architecture of FIG. **9** includes a GSM core network **1001**, a GPRS network **1030** and an IP multimedia network **1038**. The GSM core network **1001** includes a Mobile Station (MS) **1002**, at least one Base Transceiver Station (BTS) **1004** and a Base Station Controller (BSC) **1006**. The MS **1002** is physical equipment or Mobile Equipment (ME), such as a mobile phone or a laptop computer that is used by mobile subscribers, with a Subscriber identity Module (SIM) or a Universal Integrated Circuit Card (UICC). The SIM or UICC includes an International Mobile Subscriber Identity (IMSI), which is a unique identifier of a subscriber. The BTS **1004** is physical equipment, such as a radio tower, that enables a radio interface to communicate with the MS. Each BTS may serve more than one MS. The BSC **1006** manages radio resources, including the BTS. The BSC may be connected to several BTSs. The BSC and BTS components, in combination, are generally referred to as a base station (BSS) or radio access network (RAN) **1003**.

The GSM core network **1001** also includes a Mobile Switching Center (MSC) **1008**, a Gateway Mobile Switching Center (GMSC) **1010**, a Home Location Register (HLR) **1012**, Visitor Location Register (VLR) **1014**, an Authentication Center (AuC) **1018**, and an Equipment Identity Register (EIR) **1016**. The MSC **1008** performs a switching function for the network. The MSC also performs other functions, such as registration, authentication, location updating, handovers, and call routing. The GMSC **1010** provides a gateway between the GSM network and other networks, such as an Integrated Services Digital Network (ISDN) or Public Switched Telephone Networks (PSTNs) **1020**. Thus, the GMSC **1010** provides interworking functionality with external networks.

The HLR **1012** is a database that contains administrative information regarding each subscriber registered in a corresponding GSM network. The HLR **1012** also contains the current location of each MS. The VLR **1014** is a database that contains selected administrative information from the HLR **1012**. The VLR contains information necessary for call control and provision of subscribed services for each MS currently located in a geographical area controlled by the VLR. The HLR **1012** and the VLR **1014**, together with the MSC **1008**, provide the call routing and roaming capabilities of GSM. The AuC **1016** provides the parameters needed for authentication and encryption functions. Such parameters allow verification of a subscriber's identity. The EIR **1018** stores security-sensitive information about the mobile equipment.

A Short Message Service Center (SMSC) **1009** allows one-to-one Short Message Service (SMS) messages to be sent to/from the MS **1002**. A Push Proxy Gateway (PPG) **1011** is used to "push" (i.e., send without a synchronous request) content to the MS **1002**. The PPG **1011** acts as a proxy between wired and wireless networks to facilitate pushing of data to the MS **1002**. A Short Message Peer to Peer (SMPP) protocol router **1013** is provided to convert SMS-based SMPP messages to cell broadcast messages. SMPP is a protocol for exchanging SMS messages between SMS peer entities such as short message service centers. The SMPP protocol is often used to allow third parties, e.g., content suppliers such as news organizations, to submit bulk messages.

To gain access to GSM services, such as speech, data, and short message service (SMS), the MS first registers with the network to indicate its current location by performing a location update and IMSI attach procedure. The MS **1002** sends a location update including its current location information to the MSC/VLR, via the BTS **1004** and the BSC **1006**. The location information is then sent to the MS's HLR. The HLR is updated with the location information received from the MSC/VLR. The location update also is performed when the MS moves to a new location area. Typically, the location update is periodically performed to update the database as location updating events occur.

The GPRS network **1030** is logically implemented on the GSM core network architecture by introducing two packet-switching network nodes, a serving GPRS support node

(SGSN) **1032**, a cell broadcast and a Gateway GPRS support node (GGSN) **1034**. The SGSN **1032** is at the same hierarchical level as the MSC **1008** in the GSM network. The SGSN controls the connection between the GPRS network and the MS **1002**. The SGSN also keeps track of individual MS's locations and security functions and access controls.

A Cell Broadcast Center (CBC) **14** communicates cell broadcast messages that are typically delivered to multiple users in a specified area. Cell Broadcast is one-to-many geographically focused service. It enables messages to be communicated to multiple mobile phone customers who are located within a given part of its network coverage area at the time the message is broadcast.

The GGSN **1034** provides a gateway between the GPRS network and a public packet network (PDN) or other IP networks **1036**. That is, the GGSN provides interworking functionality with external networks, and sets up a logical link to the MS through the SGSN. When packet-switched data leaves the GPRS network, it is transferred to an external TCP-IP network **1036**, such as an X.25 network or the Internet. In order to access GPRS services, the MS first attaches itself to the GPRS network by performing an attach procedure. The MS then activates a packet data protocol (PDP) context, thus activating a packet communication session between the MS, the SGSN, and the GGSN.

In a GSM/GPRS network, GPRS services and GSM services can be used in parallel. The MS can operate in one of three classes: class A, class B, and class C. A class A MS can attach to the network for both GPRS services and GSM services simultaneously. A class A MS also supports simultaneous operation of GPRS services and GSM services. For example, class A mobiles can receive GSM voice/data/SMS calls and GPRS data calls at the same time.

A class B MS can attach to the network for both GPRS services and GSM services simultaneously. However, a class B MS does not support simultaneous operation of the GPRS services and GSM services. That is, a class B MS can only use one of the two services at a given time.

A class C MS can attach for only one of the GPRS services and GSM services at a time. Simultaneous attachment and operation of GPRS services and GSM services is not possible with a class C MS.

A GPRS network **1030** can be designed to operate in three network operation modes (NOM1, NOM2 and NOM3). A network operation mode of a GPRS network is indicated by a parameter in system information messages transmitted within a cell. The system information messages dictates a MS where to listen for paging messages and how to signal towards the network. The network operation mode represents the capabilities of the GPRS network. In a NOM1 network, a MS can receive pages from a circuit switched domain (voice call) when engaged in a data call. The MS can suspend the data call or take both simultaneously, depending on the ability of the MS. In a NOM2 network, a MS may not receive pages from a circuit switched domain when engaged in a data call, since the MS is receiving data and is not listening to a paging channel. In a NOM3 network, a MS can monitor pages for a circuit switched network while received data and vice versa.

The IP multimedia network **1038** was introduced with 3GPP Release 5, and includes an IP multimedia subsystem (IMS) **1040** to provide rich multimedia services to end users. A representative set of the network entities within the IMS **1040** are a call/session control function (CSCF), a media gateway control function (MGCF) **1046**, a media gateway (MGW) **1048**, and a master subscriber database, called a home subscriber server (HSS) **1050**. The HSS **1050** may be common to the GSM network **1001**, the GPRS network **1030** as well as the IP multimedia network **1038**.

The IP multimedia system **1040** is built around the call/session control function, of which there are three types: an interrogating CSCF (I-CSCF) **1043**, a proxy CSCF (P-CSCF) **1042**, and a serving CSCF (S-CSCF) **1044**. The P-CSCF **1042** is the MS's first point of contact with the IMS **1040**. The P-CSCF **1042** forwards session initiation protocol (SIP) messages received from the MS to an SIP server in a home network (and vice versa) of the MS. The P-CSCF **1042** may also modify an outgoing request according to a set of rules defined by the network operator (for example, address analysis and potential modification).

The I-CSCF **1043**, forms an entrance to a home network and hides the inner topology of the home network from other networks and provides flexibility for selecting an S-CSCF. The I-CSCF **1043** may contact a subscriber location function (SLF) **1045** to determine which HSS **1050** to use for the particular subscriber, if multiple HSS's **1050** are present. The S-CSCF **1044** performs the session control services for the MS **1002**. This includes routing originating sessions to external networks and routing terminating sessions to visited networks. The S-CSCF **1044** also decides whether an application server (AS) **1052** is required to receive information on an incoming SIP session request to ensure appropriate service handling. This decision is based on information received from the HSS **1050** (or other sources, such as an application server **1052**). The AS **1052** also communicates to a location server **1056** (e.g., a Gateway Mobile Location Center (GMLC)) that provides a position (e.g., latitude/longitude coordinates) of the MS **1002**.

The HSS **1050** contains a subscriber profile and keeps track of which core network node is currently handling the subscriber. It also supports subscriber authentication and authorization functions (AAA). In networks with more than one HSS **1050**, a subscriber location function provides information on the HSS **1050** that contains the profile of a given subscriber.

The MGCF **1046** provides interworking functionality between SIP session control signaling from the IMS **1040** and ISUP/BICC call control signaling from the external GSTN networks (not shown). It also controls the media gateway (MGW) **1048** that provides user-plane interworking functionality (e.g., converting between AMR- and PCM-coded voice). The MGW **1048** also communicates with other IP multimedia networks **1054**.

Push to Talk over Cellular (PoC) capable mobile phones register with the wireless network when the phones are in a predefined area (e.g., job site, etc.). When the mobile phones leave the area, they register with the network in their new location as being outside the predefined area. This registration, however, does not indicate the actual physical location of the mobile phones outside the pre-defined area.

FIG. **10** illustrates a PLMN block diagram view of an example architecture in which locating a device via a text message as described herein may be implemented. Mobile Station (MS) **1401** is the physical equipment used by the PLMN subscriber. In one illustrative embodiment, communications device **200** may serve as Mobile Station **1401**. Mobile Station **1401** may be one of, but not limited to, a cellular telephone, a cellular telephone in combination with another electronic device or any other wireless mobile communication device.

Mobile Station **1401** may communicate wirelessly with Base Station System (BSS) **1410**. BSS **1410** contains a Base Station Controller (BSC) **1411** and a Base Transceiver Station (BTS) **1412**. BSS **1410** may include a single BSC

1411/BTS 1412 pair (Base Station) or a system of BSC/BTS pairs which are part of a larger network. BSS 1410 is responsible for communicating with Mobile Station 1401 and may support one or more cells. BSS 1410 is responsible for handling cellular traffic and signaling between Mobile Station 1401 and Core Network 1440. Typically, BSS 1410 performs functions that include, but are not limited to, digital conversion of speech channels, allocation of channels to mobile devices, paging, and transmission/reception of cellular signals.

Additionally, Mobile Station 1401 may communicate wirelessly with Radio Network System (RNS) 1420. RNS 1420 contains a Radio Network Controller (RNC) 1421 and one or more Node(s) B 1422. RNS 1420 may support one or more cells. RNS 1420 may also include one or more RNC 1421/Node B 1422 pairs or alternatively a single RNC 1421 may manage multiple Nodes B 1422. RNS 1420 is responsible for communicating with Mobile Station 1401 in its geographically defined area. RNC 1421 is responsible for controlling the Node(s) B 1422 that are connected to it and is a control element in a UMTS radio access network. RNC 1421 performs functions such as, but not limited to, load control, packet scheduling, handover control, security functions, as well as controlling Mobile Station 1401's access to the Core Network (CN) 1440.

The evolved UMTS Terrestrial Radio Access Network (E-UTRAN) 1430 is a radio access network that provides wireless data communications for Mobile Station 1401 and User Equipment 1402. E-UTRAN 1430 provides higher data rates than traditional UMTS. It is part of the Long Term Evolution (LTE) upgrade for mobile networks and later releases meet the requirements of the International Mobile Telecommunications (IMT) Advanced and are commonly known as a 4G networks. E-UTRAN 1430 may include of series of logical network components such as E-UTRAN Node B (eNB) 1431 and E-UTRAN Node B (eNB) 1432. E-UTRAN 1430 may contain one or more eNBs. User Equipment 1402 may be any user device capable of connecting to E-UTRAN 1430 including, but not limited to, a personal computer, laptop, mobile device, wireless router, or other device capable of wireless connectivity to E-UTRAN 1430. The improved performance of the E-UTRAN 1430 relative to a typical UMTS network allows for increased bandwidth, spectral efficiency, and functionality including, but not limited to, voice, high-speed applications, large data transfer and IPTV, while still allowing for full mobility.

An example embodiment of a mobile data and communication service that may be implemented in the PLMN architecture described in FIG. 10 is the Enhanced Data rates for GSM Evolution (EDGE). EDGE is an enhancement for GPRS networks that implements an improved signal modulation scheme known as 8-PSK (Phase Shift Keying). By increasing network utilization, EDGE may achieve up to three times faster data rates as compared to a typical GPRS network. EDGE may be implemented on any GSM network capable of hosting a GPRS network, making it an ideal upgrade over GPRS since it may provide increased functionality of existing network resources. Evolved EDGE networks are becoming standardized in later releases of the radio telecommunication standards, which provide for even greater efficiency and peak data rates of up to 1 Mbit/s, while still allowing implementation on existing GPRS-capable network infrastructure.

Typically Mobile Station 1401 may communicate with any or all of BSS 1410, RNS 1420, or E-UTRAN 1430. In a illustrative system, each of BSS 1410, RNS 1420, and E-UTRAN 1430 may provide Mobile Station 1401 with access to Core Network 1440. The Core Network 1440 may include of a series of devices that route data and communications between end users. Core Network 1440 may provide network service functions to users in the Circuit Switched (CS) domain, the Packet Switched (PS) domain or both. The CS domain refers to connections in which dedicated network resources are allocated at the time of connection establishment and then released when the connection is terminated. The PS domain refers to communications and data transfers that make use of autonomous groupings of bits called packets. Each packet may be routed, manipulated, processed or handled independently of all other packets in the PS domain and does not require dedicated network resources.

The Circuit Switched—Media Gateway Function (CS-MGW) 1441 is part of Core Network 1440, and interacts with Visitor Location Register (VLR) and Mobile-Services Switching Center (MSC) Server 1460 and Gateway MSC Server 1461 in order to facilitate Core Network 1440 resource control in the CS domain. Functions of CS-MGW 1441 include, but are not limited to, media conversion, bearer control, payload processing and other mobile network processing such as handover or anchoring. CS-MGW 1440 may receive connections to Mobile Station 1401 through BSS 1410, RNS 1420 or both.

Serving GPRS Support Node (SGSN) 1442 stores subscriber data regarding Mobile Station 1401 in order to facilitate network functionality. SGSN 1442 may store subscription information such as, but not limited to, the International Mobile Subscriber Identity (IMSI), temporary identities, or Packet Data Protocol (PDP) addresses. SGSN 1442 may also store location information such as, but not limited to, the Gateway GPRS Support Node (GGSN) 1444 address for each GGSN where an active PDP exists. GGSN 1444 may implement a location register function to store subscriber data it receives from SGSN 1442 such as subscription or location information.

Serving Gateway (S-GW) 1443 is an interface which provides connectivity between E-UTRAN 1430 and Core Network 1440. Functions of S-GW 1443 include, but are not limited to, packet routing, packet forwarding, transport level packet processing, event reporting to Policy and Charging Rules Function (PCRF) 1450, and mobility anchoring for inter-network mobility. PCRF 1450 uses information gathered from S-GW 1443, as well as other sources, to make applicable policy and charging decisions related to data flows, network resources and other network administration functions. Packet Data Network Gateway (PDN-GW) 1445 may provide user-to-services connectivity functionality including, but not limited to, network-wide mobility anchoring, bearer session anchoring and control, and IP address allocation for PS domain connections.

Home Subscriber Server (HSS) 1463 is a database for user information, and stores subscription data regarding Mobile Station 1401 or User Equipment 1402 for handling calls or data sessions. Networks may contain one HSS 1463 or more if additional resources are required. Example data stored by HSS 1463 include, but is not limited to, user identification, numbering and addressing information, security information, or location information. HSS 1463 may also provide call or session establishment procedures in both the PS and CS domains.

The VLR/MSC Server 1460 provides user location functionality. When Mobile Station 1401 enters a new network location, it begins a registration procedure. A MSC Server for that location transfers the location information to the VLR for the area. A VLR and MSC Server may be located

in the same computing environment, as is shown by VLR/MSC Server **1460**, or alternatively may be located in separate computing environments. A VLR may contain, but is not limited to, user information such as the IMSI, the Temporary Mobile Station Identity (TMSI), the Local Mobile Station Identity (LMSI), the last known location of the mobile station, or the SGSN where the mobile station was previously registered. The MSC server may contain information such as, but not limited to, procedures for Mobile Station **1401** registration or procedures for handover of Mobile Station **1401** to a different section of the Core Network **1440**. GMSC Server **1461** may serve as a connection to alternate GMSC Servers for other mobile stations in larger networks.

Equipment Identity Register (EIR) **1462** is a logical element which may store the International Mobile Equipment Identities (IMEI) for Mobile Station **1401**. In a typical embodiment, user equipment may be classified as either "white listed" or "black listed" depending on its status in the network. In one embodiment, if Mobile Station **1401** is stolen and put to use by an unauthorized user, it may be registered as "black listed" in EIR **1462**, preventing its use on the network. Mobility Management Entity (MME) **1464** is a control node which may track Mobile Station **1401** or User Equipment **1402** if the devices are idle. Additional functionality may include the ability of MME **1464** to contact an idle Mobile Station **1401** or User Equipment **1402** if retransmission of a previous session is required.

While example embodiments of locating a device via a text message have been described in connection with various computing devices/processors, the underlying concepts may be applied to any computing device, processor, or system capable of facilitating locating a device via a text message. The various techniques described herein may be implemented in connection with hardware or software or, where appropriate, with a combination of both. Thus, the methods and apparatuses of locating a device via a text message, or certain aspects or portions thereof, may take the form of program code (i.e., instructions) embodied in concrete, tangible, storage media having a concrete, tangible, physical structure. Examples of tangible storage media include floppy diskettes, CD-ROMs, DVDs, hard drives, or any other tangible machine-readable storage medium (computer-readable storage medium). Thus, a computer-readable storage medium is not a transient signal per se. Further, a computer-readable storage medium is not a propagating signal per se. A computer-readable storage medium as described herein is an article of manufacture. When the program code is loaded into and executed by a machine, such as a computer, the machine becomes an apparatus for implementation of locating a device via a text message as described herein. In the case of program code execution on programmable computers, the computing device will generally include a processor, a storage medium readable by the processor (including volatile and non-volatile memory and/or storage elements), at least one input device, and at least one output device. The program(s) can be implemented in assembly or machine language, if desired. The language can be a compiled or interpreted language, and combined with hardware implementations.

The methods and apparatuses for locating a device via a text message as described herein also may be practiced via communications embodied in the form of program code that is transmitted over some transmission medium, such as over electrical wiring or cabling, through fiber optics, or via any other form of transmission, wherein, when the program code is received and loaded into and executed by a machine, such as an EPROM, a gate array, a programmable logic device (PLD), a client computer, or the like, the machine becomes an apparatus for implementing location of a device via a text message as described herein. When implemented on a general-purpose processor, the program code combines with the processor to provide a unique apparatus that operates to invoke the functionality of locating a device via a text message as described herein.

While locating a device via a text message has been described in connection with the various embodiments of the various figures, it is to be understood that other similar embodiments may be used or modifications and additions may be made to the described embodiments of locating a device via a text message without deviating therefrom. For example, one skilled in the art will recognize that locating a device via a text message as described in the instant application may apply to any environment, whether wired or wireless, and may be applied to any number of such devices connected via a communications network and interacting across the network. Therefore, a device farm as described herein should not be limited to any single embodiment, but rather should be construed in breadth and scope in accordance with the appended claims.

What is claimed:

1. An apparatus comprising:
- a processor; and
- memory coupled to the processor, the memory comprising executable instructions that when executed by the processor cause the processor to effectuate operations comprising:
  - receiving a text message sent to a device, the text message comprising:
    - a destination address of the device;
    - an indication of a region of interest; and
    - an image indicative of a location of the device;
  - determining, based on the received text message, whether a provider of the text message is authorized to receive an indication of the location of the device;
  - upon a determination that the provider of the text message is authorized to receive the indication of the location of the device, determining the location of the device;
  - providing the indication of the location of the device when the location of the device is within the region of interest, the indication of the location of the device is provided in a format compatible for rendering with a geographical map; and
  - restricting forwarding of the text message to the device based on a determination that:
    - the text message contains a code indicative of a request for the location of the device, and
    - the text message does not contain a message for the device at the destination address, wherein the apparatus comprises at least one of a mobile switching center, a short message service center, a consolidated network repository, a service mobile location center, or a radio access network.

2. The apparatus of claim **1**, wherein the text message comprises a predetermined code.

3. The apparatus of claim **1**, wherein the text message is formatted as short message service message.

4. The apparatus of claim **1**, wherein the destination address of the device comprises a phone number of the device.

5. The apparatus of claim **1**, wherein the apparatus comprises a combined home location register and home subscriber server.

6. The apparatus of claim 1, wherein the text message comprises a predetermined code, the predetermined code is indicative of a request for a location of the device.

7. A method comprising:

receiving, by an apparatus, a text message sent to a device, the text message comprising:

a destination address of the device;

an indication of a region of interest; and

an image indicative of a location of the device;

determining, based on the received text message, whether a provider of the text message is authorized to receive an indication of the location of the device;

upon a determination that the provider of the text message is authorized to receive the indication of the location of the device, determining the location of the device;

providing the indication of the location of the device when the location of the device is within the region of interest, the indication of the location of the device is provided in a format compatible for rendering with a geographical map; and

restricting forwarding of the text message based on a determination that:

the text message contains a code indicative of a request for the location of the device, and

the text message does not contain a message for the device at the destination address, wherein the apparatus comprises at least one of a mobile switching center, a short message service center, a consolidated network repository, a service mobile location center, or a radio access network.

8. The method of claim 7, wherein the text message comprises a predetermined code.

9. The method of claim 7, wherein the text message is formatted as short message service message.

10. The method of claim 7, wherein the destination address of the device comprises a phone number of the device.

11. The method of claim 7, wherein the intercepting is completed by an apparatus that comprises a combined home location register and home subscriber server.

12. The method of claim 7, wherein the text message comprises a predetermined code, the predetermined code is indicative of a request for a location of the device.

13. A computer-readable storage medium that is not a transient signal comprising executable instructions that when executed by a processor cause the processor to effectuate operations comprising:

receiving, by an apparatus, a text message sent to a device, the text message comprising:

a destination address of the device;

an indication of a region of interest; and

an image indicative of a location of the device;

determining, based on the received text message, whether a provider of the text message is authorized to receive an indication of the location of the device;

upon a determination that the provider of the text message is authorized to receive the indication of the location of the device, determining the location of the device;

providing the indication of the location of the device when the location of the device is within the region of interest, the indication of the location of the device is provided in a format compatible for rendering with a geographical map; and

restricting forwarding of the text message based on a determination that:

the text message contains a code indicative of a request for the location of the device, and

the text message does not contain a message for the device at the destination address, wherein the apparatus comprises at least one of a mobile switching center, a short message service center, a consolidated network repository, a service mobile location center, or a radio access network.

14. The computer-readable storage medium of claim 13, wherein the text message comprises a predetermined code.

15. The computer-readable storage medium of claim 13, wherein the text message is formatted as short message service message.

16. The computer-readable storage medium of claim 13, wherein the destination address of the device comprises a phone number of the device.

17. The computer-readable storage medium of claim 13, wherein the apparatus comprises a combined home location register and home subscriber server.

18. The computer-readable storage medium of claim 13, wherein the text message comprises a predetermined code, the predetermined code is indicative of a request for a location of the device.

* * * * *