US009254931B2

(12) **United States Patent**
Bison

(10) **Patent No.: US 9,254,931 B2**
(45) **Date of Patent: Feb. 9, 2016**

(54) **PALLET ROPING AND WRAPPING APPARATUS**

(71) Applicant: **Darrel Bison**, Phoenix, AZ (US)

(72) Inventor: **Darrel Bison**, Phoenix, AZ (US)

(*) Notice: Subject to any disclaimer, the term of this patent is extended or adjusted under 35 U.S.C. 154(b) by 0 days.

(21) Appl. No.: **14/667,454**

(22) Filed: **Mar. 24, 2015**

(65) **Prior Publication Data**

US 2015/0197355 A1 Jul. 16, 2015

Related U.S. Application Data

(60) Division of application No. 14/337,022, filed on Jul. 21, 2014, now Pat. No. 8,984,848, which is a continuation of application No. 14/265,179, filed on Apr. 29, 2014, which is a continuation-in-part of application No. 13/287,038, filed on Nov. 1, 2011, now Pat. No. 8,707,664.

(51) **Int. Cl.**

B65B 11/06	(2006.01)
B65B 11/08	(2006.01)
B65B 11/00	(2006.01)
B65B 11/58	(2006.01)

(52) **U.S. Cl.**

CPC ***B65B 11/006*** (2013.01); ***B65B 11/585*** (2013.01)

(58) **Field of Classification Search**

CPC B65B 11/002; B65B 11/008; B65B 11/58; B65B 11/006

USPC 53/399, 582, 589, 411

See application file for complete search history.

(56) **References Cited**

U.S. PATENT DOCUMENTS

2,026,282	A		12/1935	Leguillon
3,896,604	A		7/1975	Marantz
4,102,513	A		7/1978	Guard
4,166,589	A		9/1979	Hoover et al.
4,235,062	A		11/1980	Lancaster et al.
4,255,918	A		3/1981	Lancaster et al.
4,353,515	A		10/1982	Weaver et al.
4,468,922	A		9/1984	McCrady et al.
4,619,102	A		10/1986	Geisinger
4,723,393	A	*	2/1988	Silbernagel 53/556
4,807,427	A		2/1989	Casteel et al.
4,845,920	A		7/1989	Lancaster
4,961,306	A		10/1990	Sawhney et al.
5,031,771	A		7/1991	Lancaster
5,079,898	A		1/1992	Springs et al.
5,107,657	A		4/1992	Diehl et al.
5,125,209	A		6/1992	Thimon et al.
5,168,685	A		12/1992	Suzuki
5,195,297	A		3/1993	Lancaster et al.
5,203,939	A		4/1993	Sperling et al.
5,315,808	A		5/1994	MacIvor et al.
5,385,001	A		1/1995	Ramer

(Continued)

Primary Examiner — Gloria R Weeks

(74) *Attorney, Agent, or Firm* — Booth Udall Fuller, PLC

(57) **ABSTRACT**

Pallet roping and wrapping machines having a plurality of spools of stretch film supported on one or more spools and guides that form ropes of stretch film without cutting. Specific implementations of guides include guides formed or rings and rollers. Positions of guides may be adjustable. A primary roll of stretch film may be positionally coupled to a primary spool core, and a plurality of secondary rolls of stretch film may be positionally coupled to one or more secondary spool cores. The wrapping machines may include a plurality of guides positioned to narrow the stretch film from the plurality of secondary rolls to form a plurality of ropes fully overlapping a web of the primary roll of stretch film when wrapped around a palletized load.

20 Claims, 17 Drawing Sheets

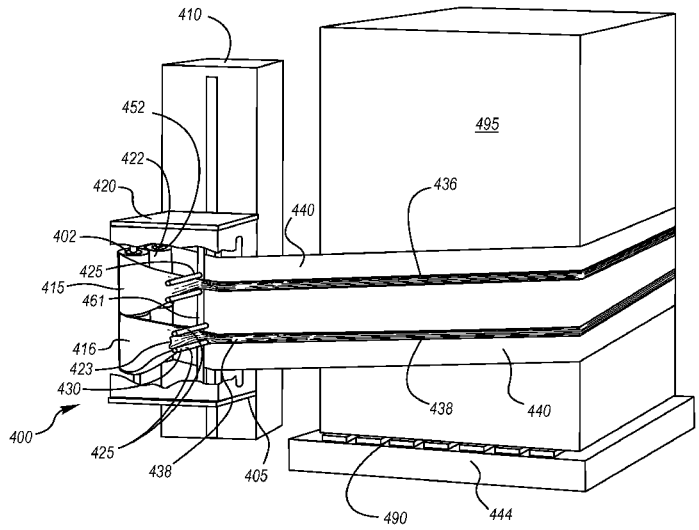

(56) **References Cited**

U.S. PATENT DOCUMENTS

5,447,009	A	9/1995	Oleksy et al.	
5,797,246	A *	8/1998	Martin-Cocher et al.	53/399
5,819,503	A *	10/1998	Lancaster, III	53/399
5,965,262	A	10/1999	Whisler et al.	
6,065,269	A *	5/2000	Malnati	53/176
6,164,047	A	12/2000	Rossi	
6,311,459	B1 *	11/2001	Rossi	53/389.2
6,393,808	B1 *	5/2002	Kallner et al.	53/556
6,688,076	B1 *	2/2004	Rivera, Jr.	53/204
6,745,544	B2	6/2004	Matsumoto et al.	
6,775,956	B1 *	8/2004	Lacey	53/399
6,796,105	B2 *	9/2004	Rossi	53/399
6,892,515	B2 *	5/2005	Cere'	53/586
6,971,220	B1	12/2005	Rampp	
7,581,368	B1 *	9/2009	Bison	53/399
7,621,107	B2 *	11/2009	Vanderheiden et al.	53/441
7,908,831	B1 *	3/2011	Dugan	53/587
8,046,975	B1 *	11/2011	Bison	53/399
8,053,056	B2	11/2011	Heikaus et al.	
8,276,349	B2	10/2012	Van Amstel et al.	
8,528,615	B2 *	9/2013	Colson et al.	156/441
8,549,819	B1 *	10/2013	Bison	53/399
8,707,664	B1 *	4/2014	Bison	53/587
2008/0092489	A1	4/2008	Smith	
2008/0209859	A1	9/2008	Vanderheiden et al.	

* cited by examiner

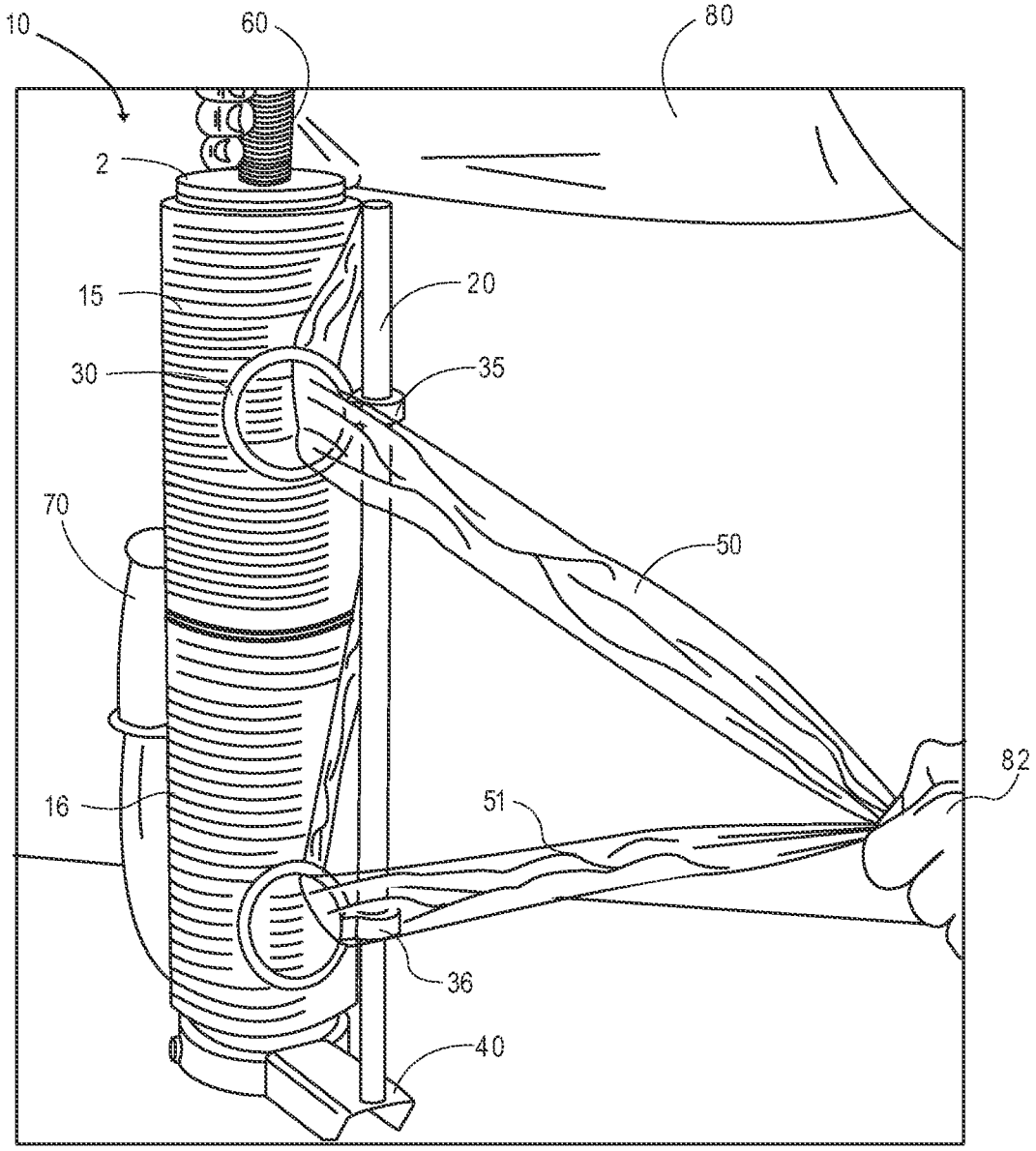

FIG. 1

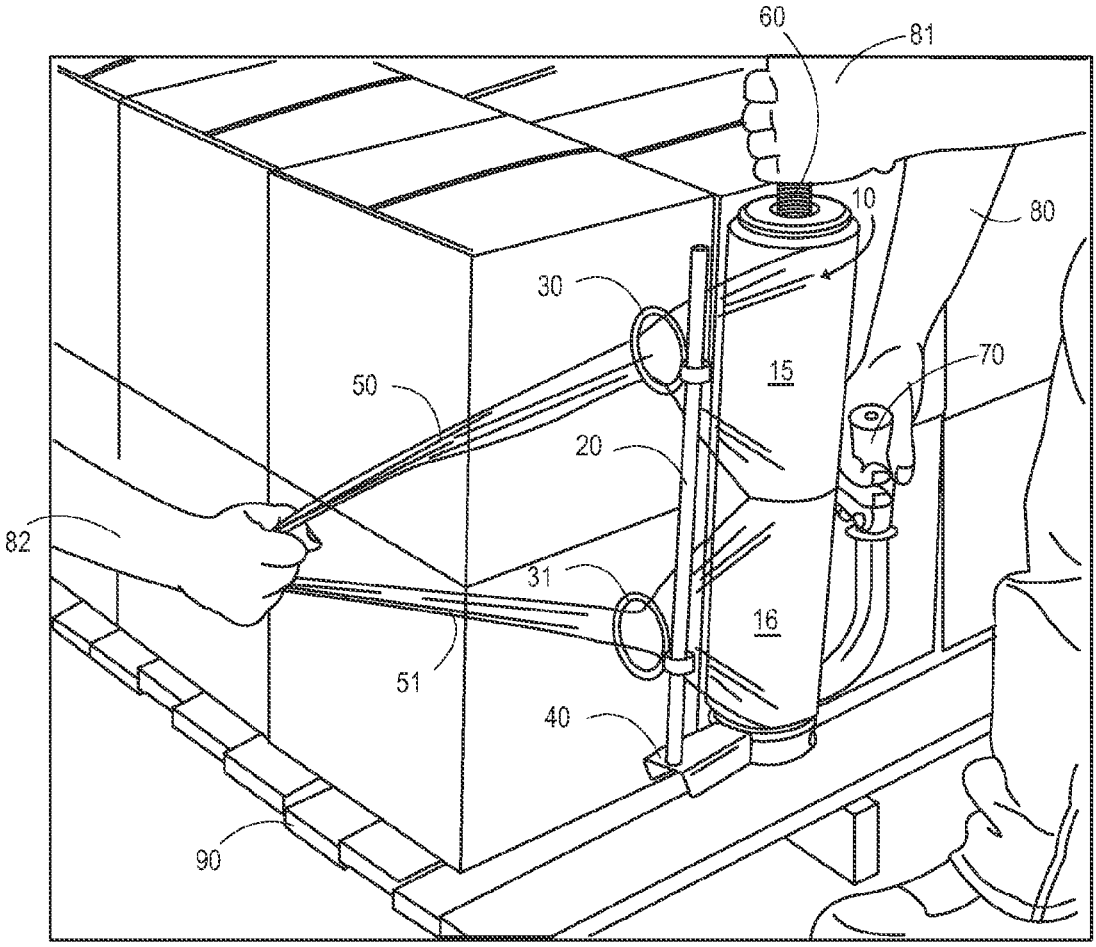

FIG. 2

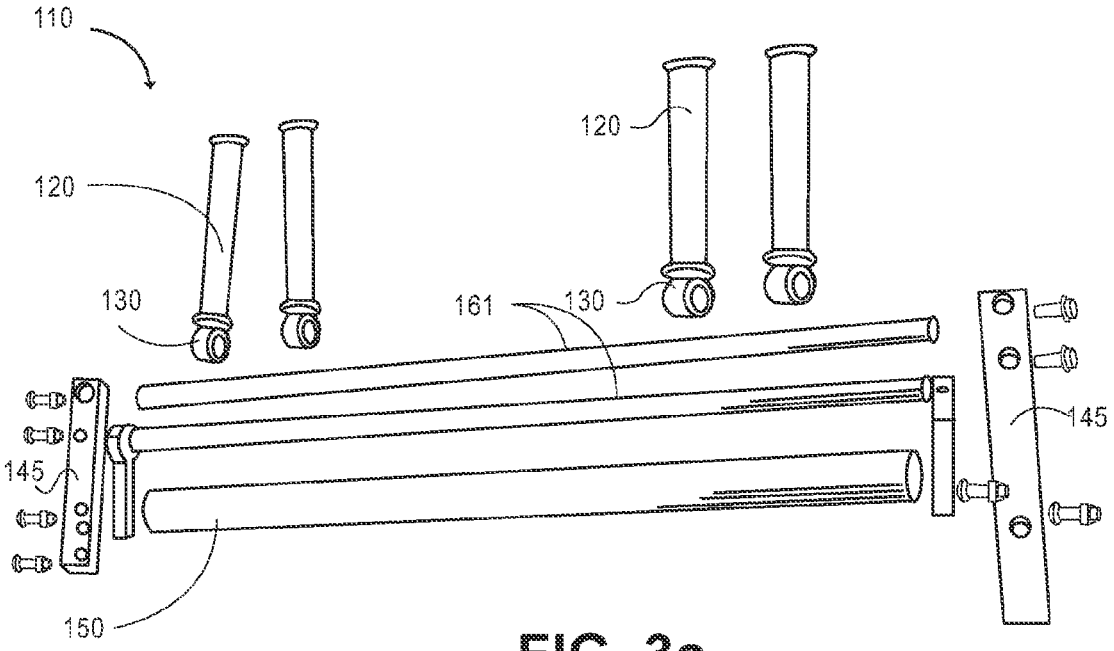

FIG. 3a

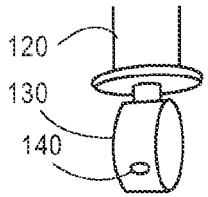

FIG. 3b

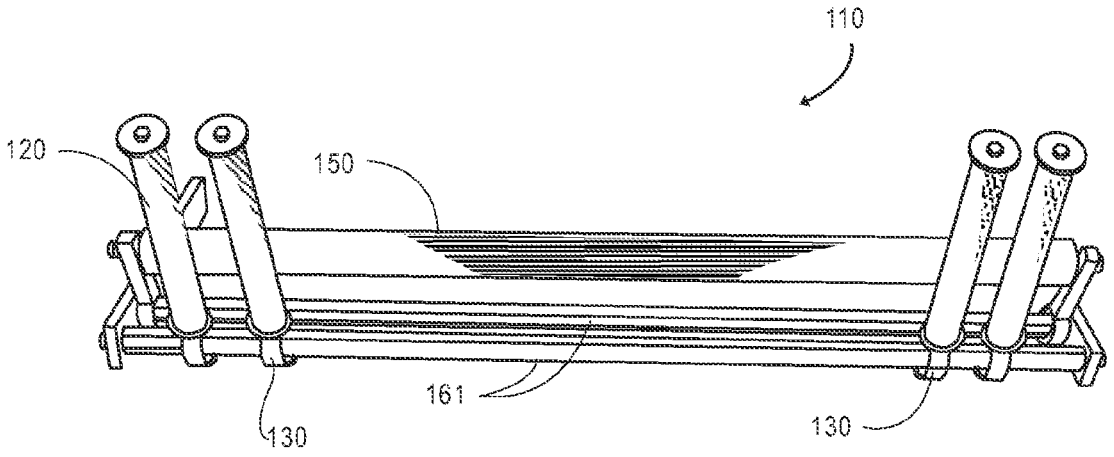

FIG. 4

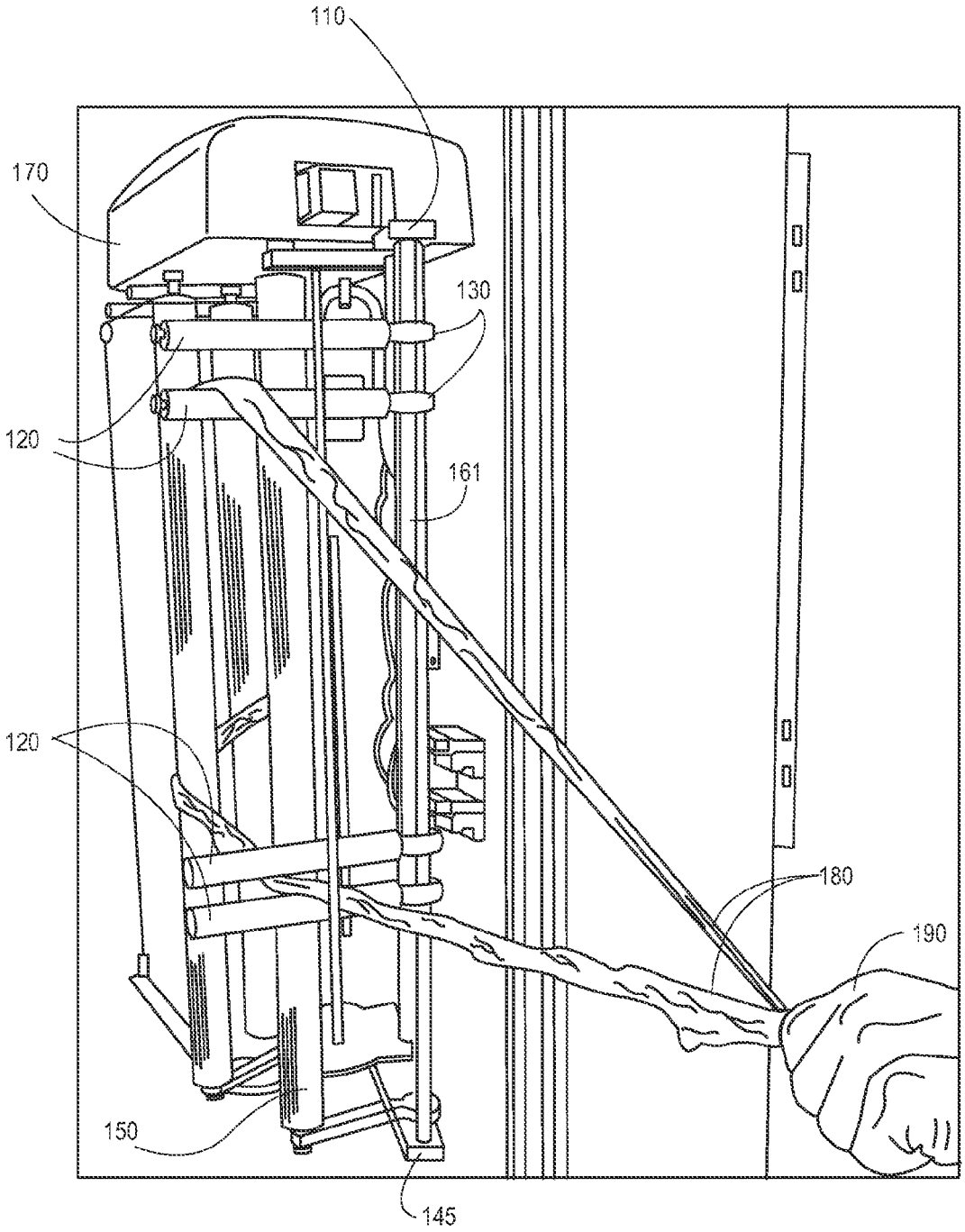

FIG. 5

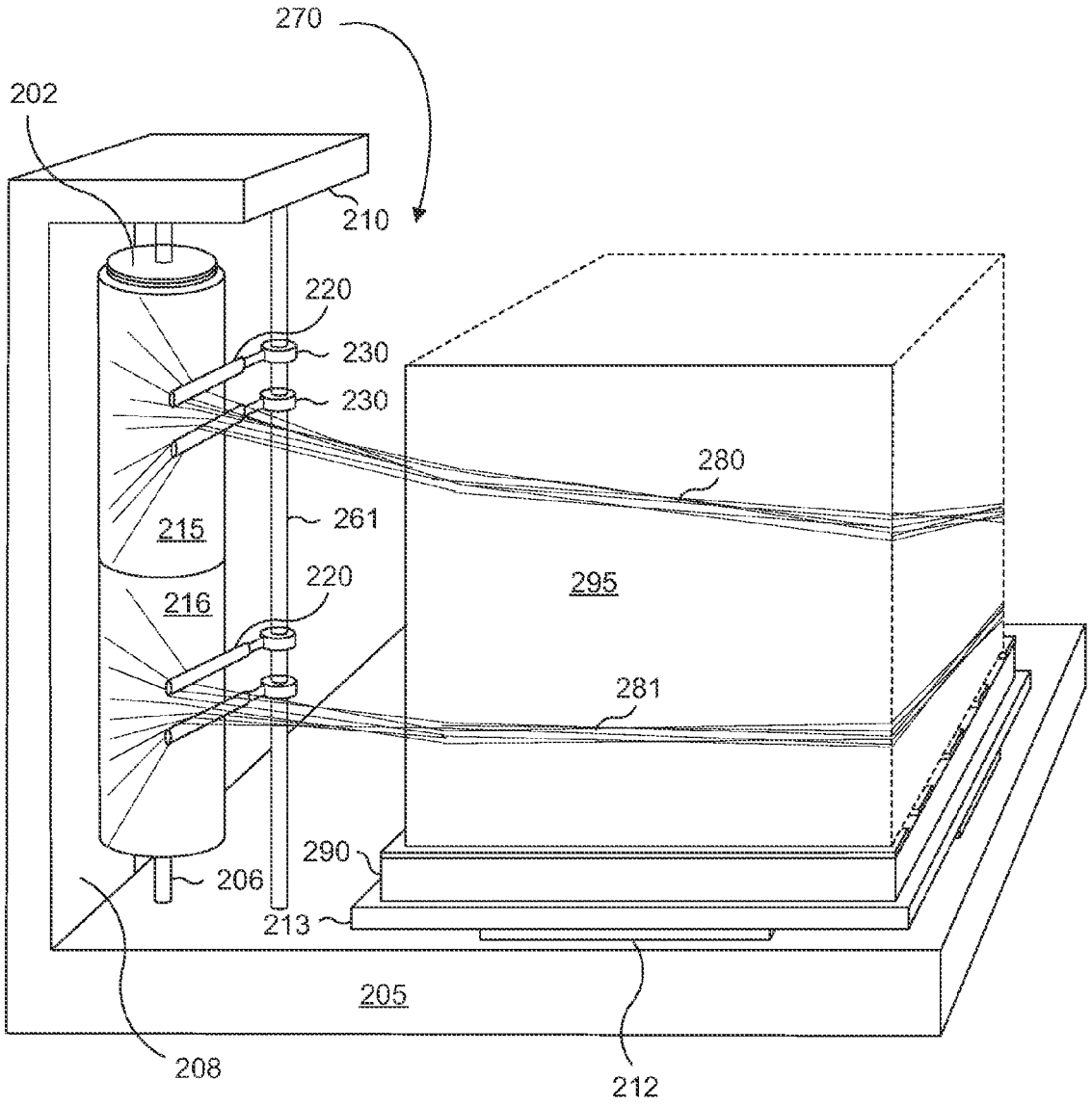
270
202
210
220
230
230
280
215
261
295
220
216
281
290
206
213
205
208
212

FIG. 6

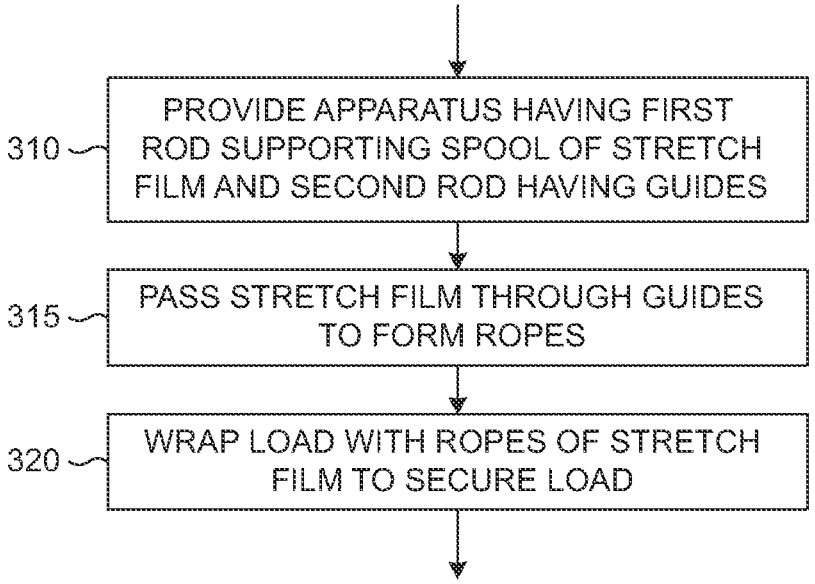
310
PROVIDE APPARATUS HAVING FIRST ROD SUPPORTING SPOOL OF STRETCH FILM AND SECOND ROD HAVING GUIDES
315
PASS STRETCH FILM THROUGH GUIDES TO FORM ROPES
320
WRAP LOAD WITH ROPES OF STRETCH FILM TO SECURE LOAD

FIG. 7

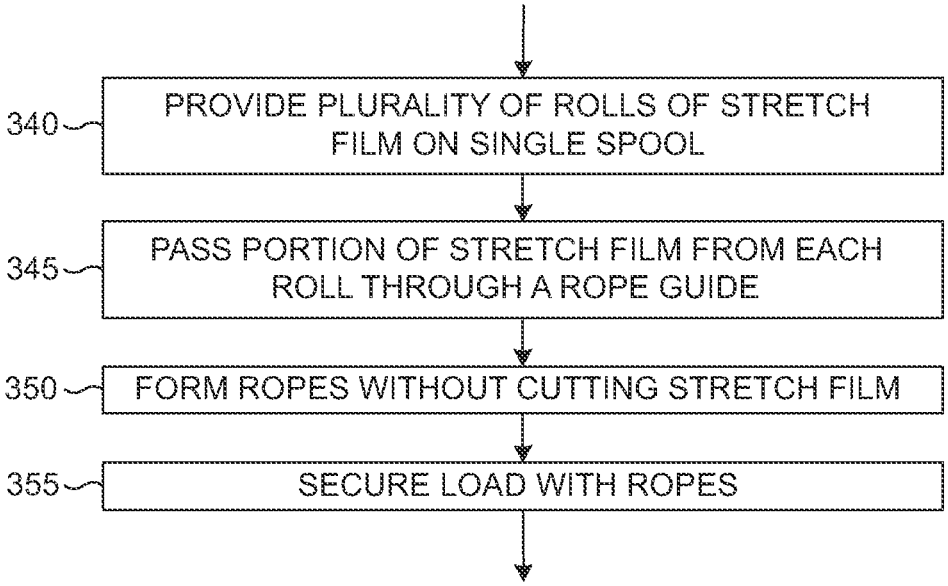
340
PROVIDE PLURALITY OF ROLLS OF STRETCH FILM ON SINGLE SPOOL
345
PASS PORTION OF STRETCH FILM FROM EACH ROLL THROUGH A ROPE GUIDE
350
FORM ROPES WITHOUT CUTTING STRETCH FILM
355
SECURE LOAD WITH ROPES

FIG. 8

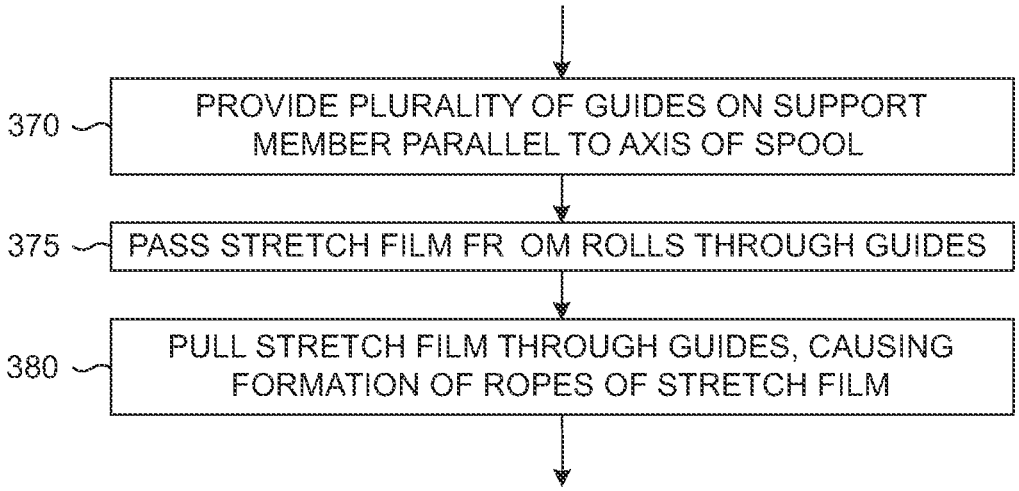
370
PROVIDE PLURALITY OF GUIDES ON SUPPORT MEMBER PARALLEL TO AXIS OF SPOOL
375
PASS STRETCH FILM FR OM ROLLS THROUGH GUIDES
380
PULL STRETCH FILM THROUGH GUIDES, CAUSING FORMATION OF ROPES OF STRETCH FILM

FIG. 9

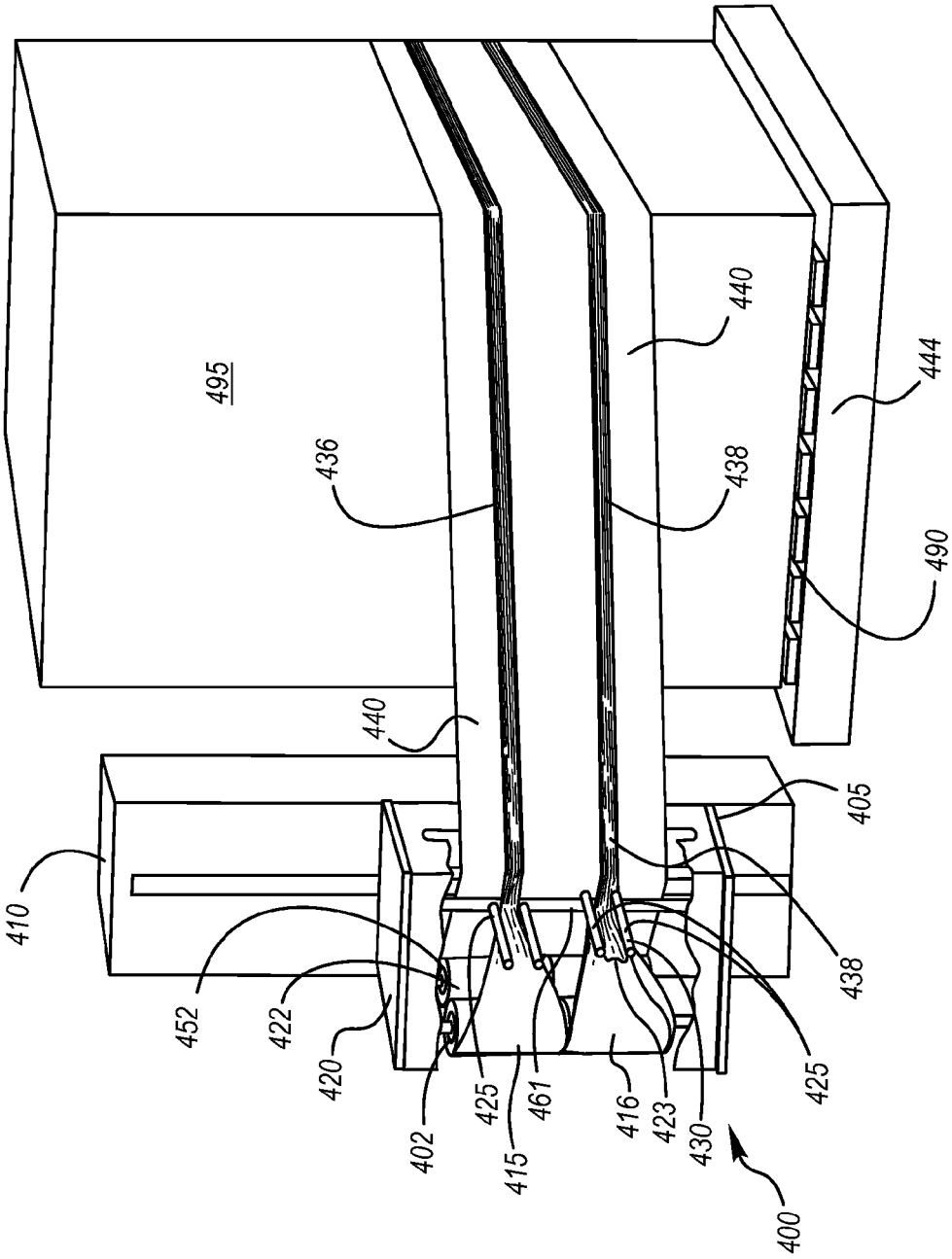
495
436
440
438
440
444
490
410
452
422
420
402
425
415
461
416
423
430
400
425
438
405

Fig. 10a

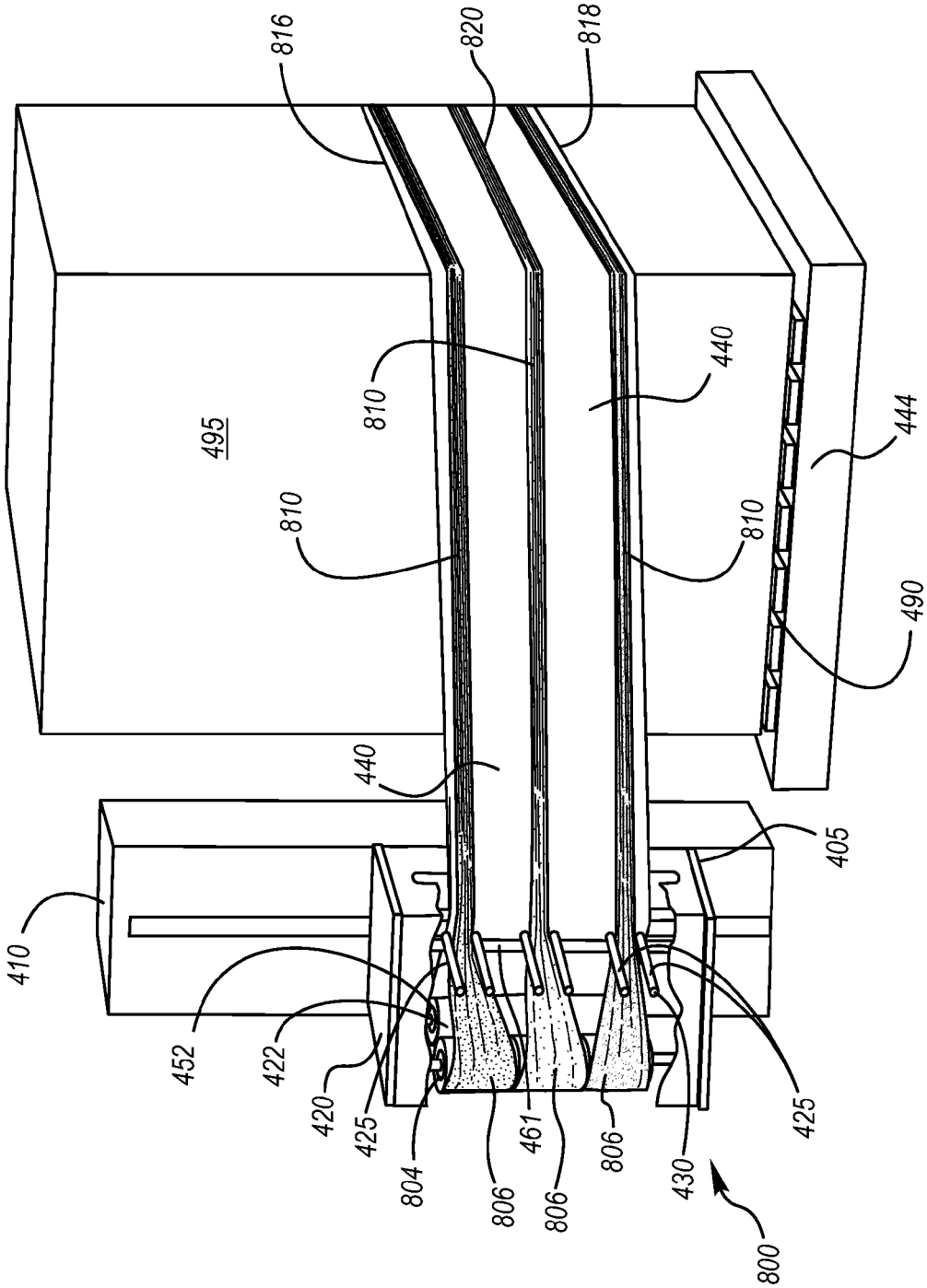
816
820
818
495
810
810
440
810
440
444
490
405
410
452
422
420
425
804
806
461
806
806
430
425
800

Fig. 10b

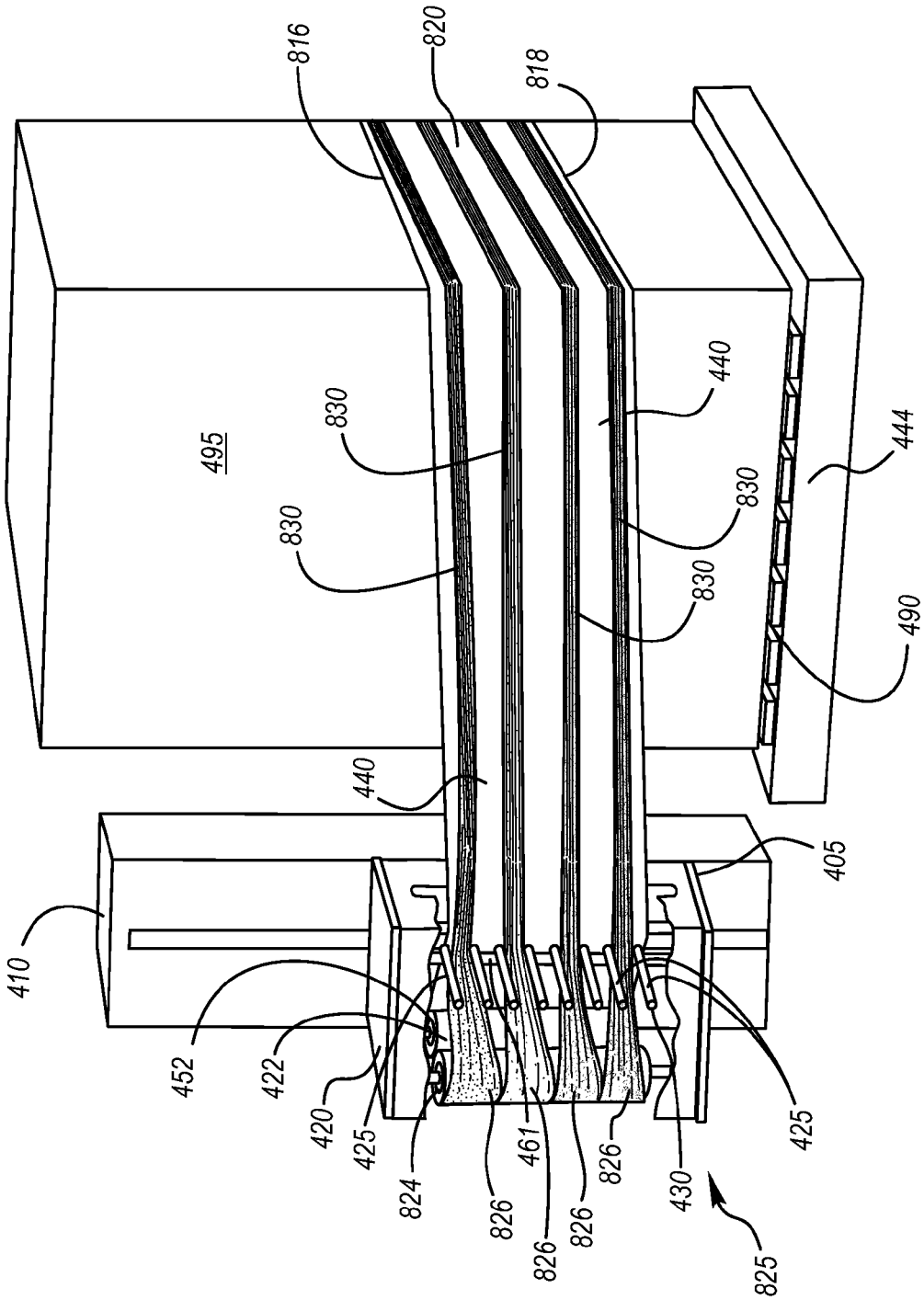
816
820
818
495
830
830
440
830
830
444
490
440
405
410
452
422
420
425
824
826
461
826
826
826
430
825
425

Fig. 10c

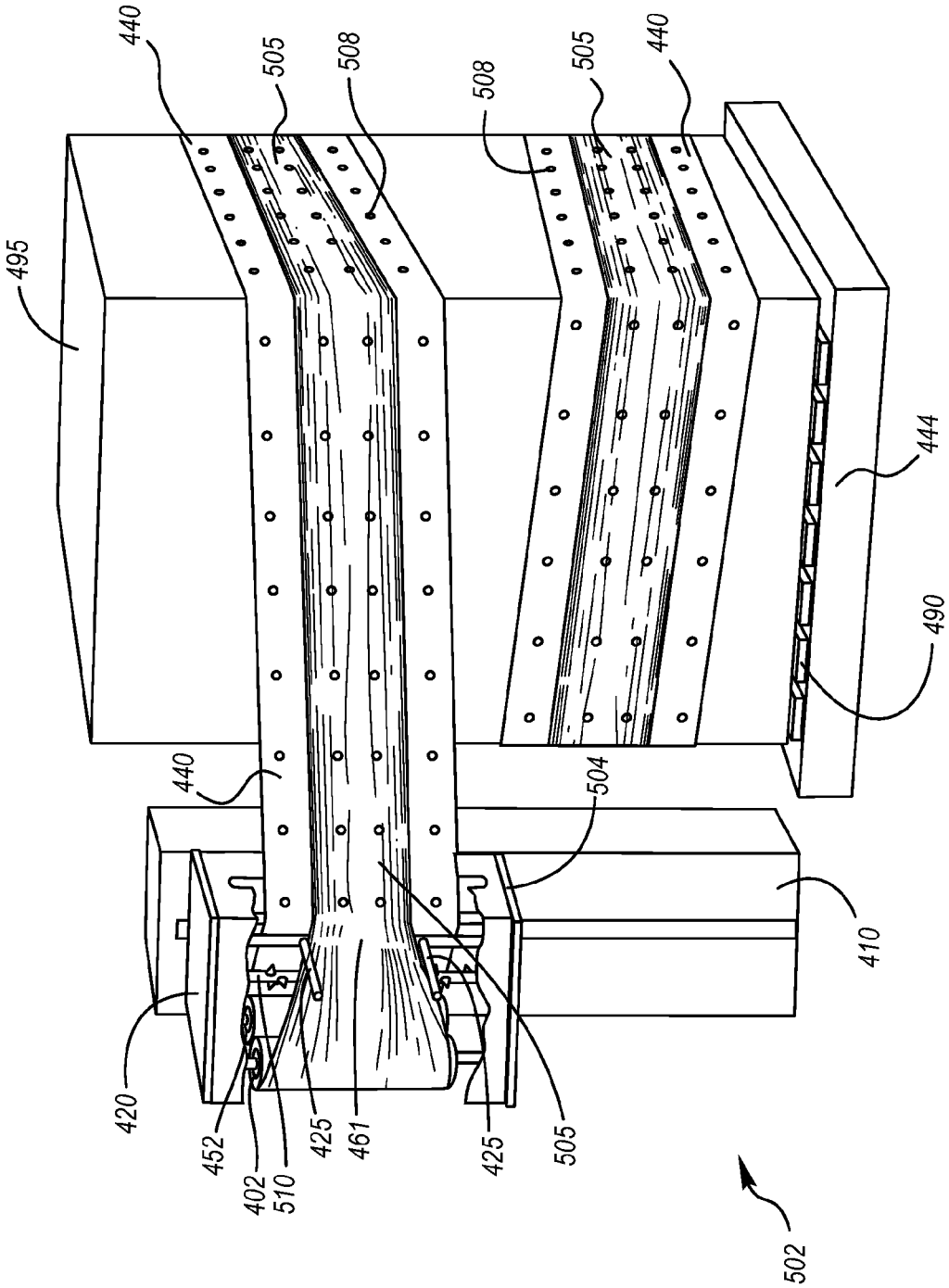
440
505
508
508
505
440
495
444
490
440
504
410
420
452
402
510
425
461
425
505
502

Fig. 10d

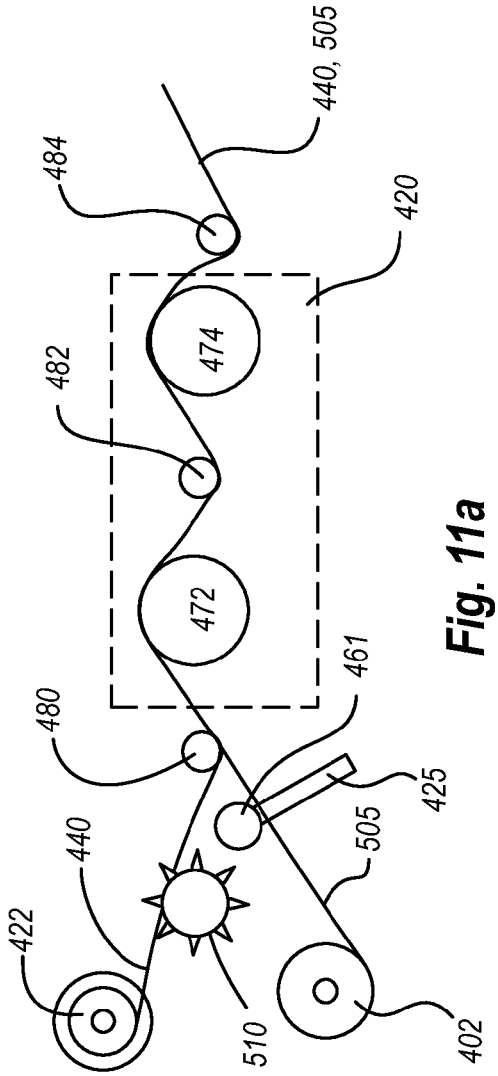

Fig. 11a

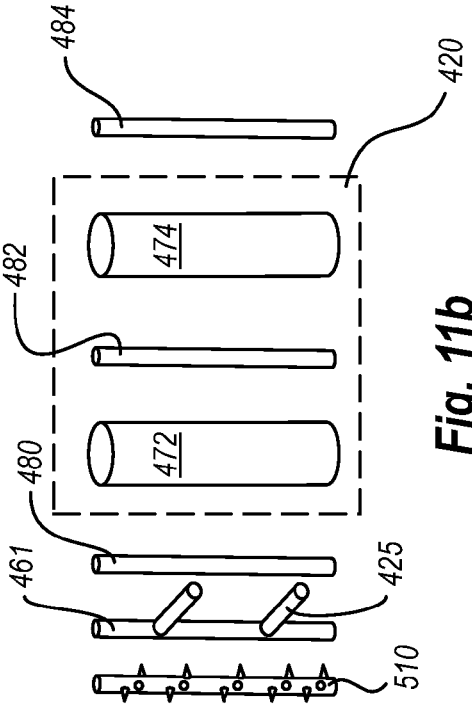

Fig. 11b

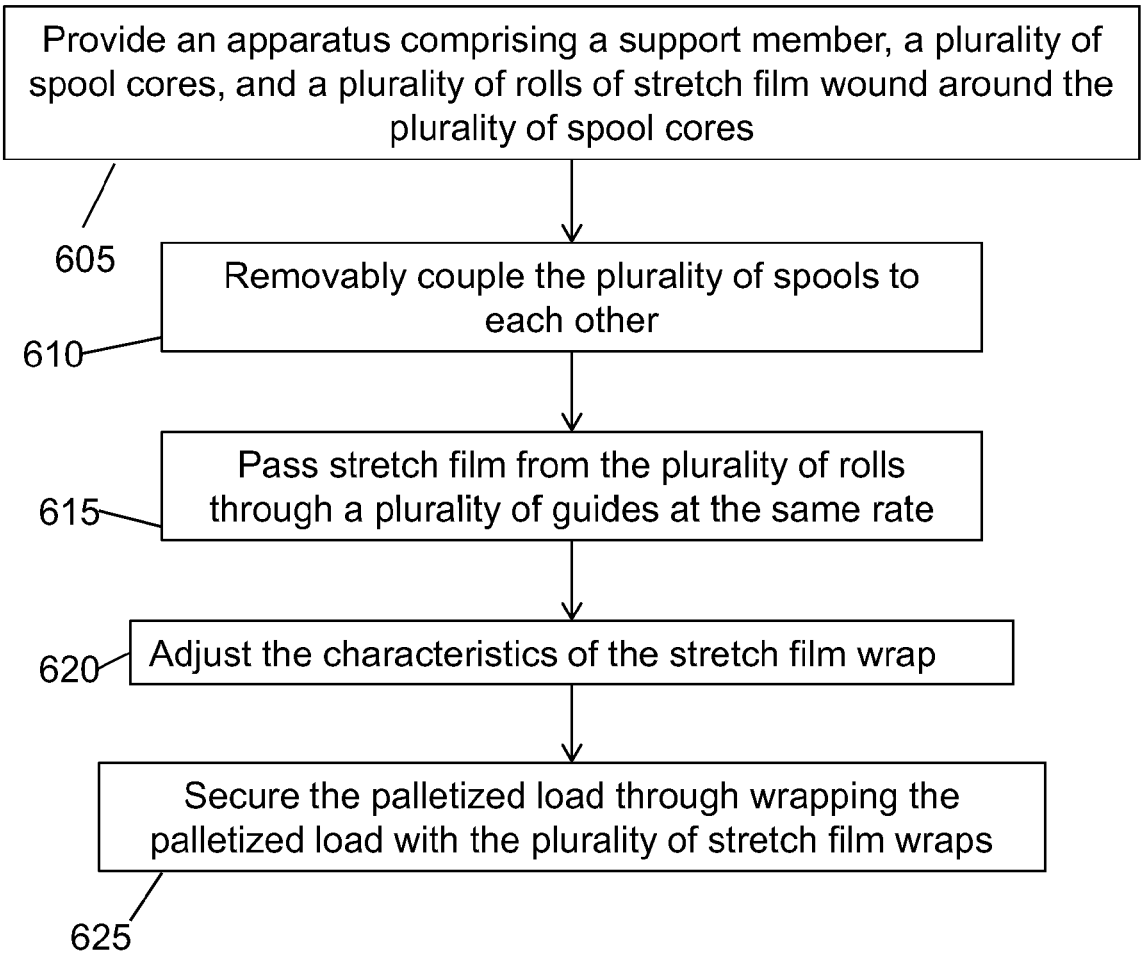
Provide an apparatus comprising a support member, a plurality of spool cores, and a plurality of rolls of stretch film wound around the plurality of spool cores
605
Removably couple the plurality of spools to each other
610
Pass stretch film from the plurality of rolls through a plurality of guides at the same rate
615
Adjust the characteristics of the stretch film wrap
620
Secure the palletized load through wrapping the palletized load with the plurality of stretch film wraps
625

FIG. 12

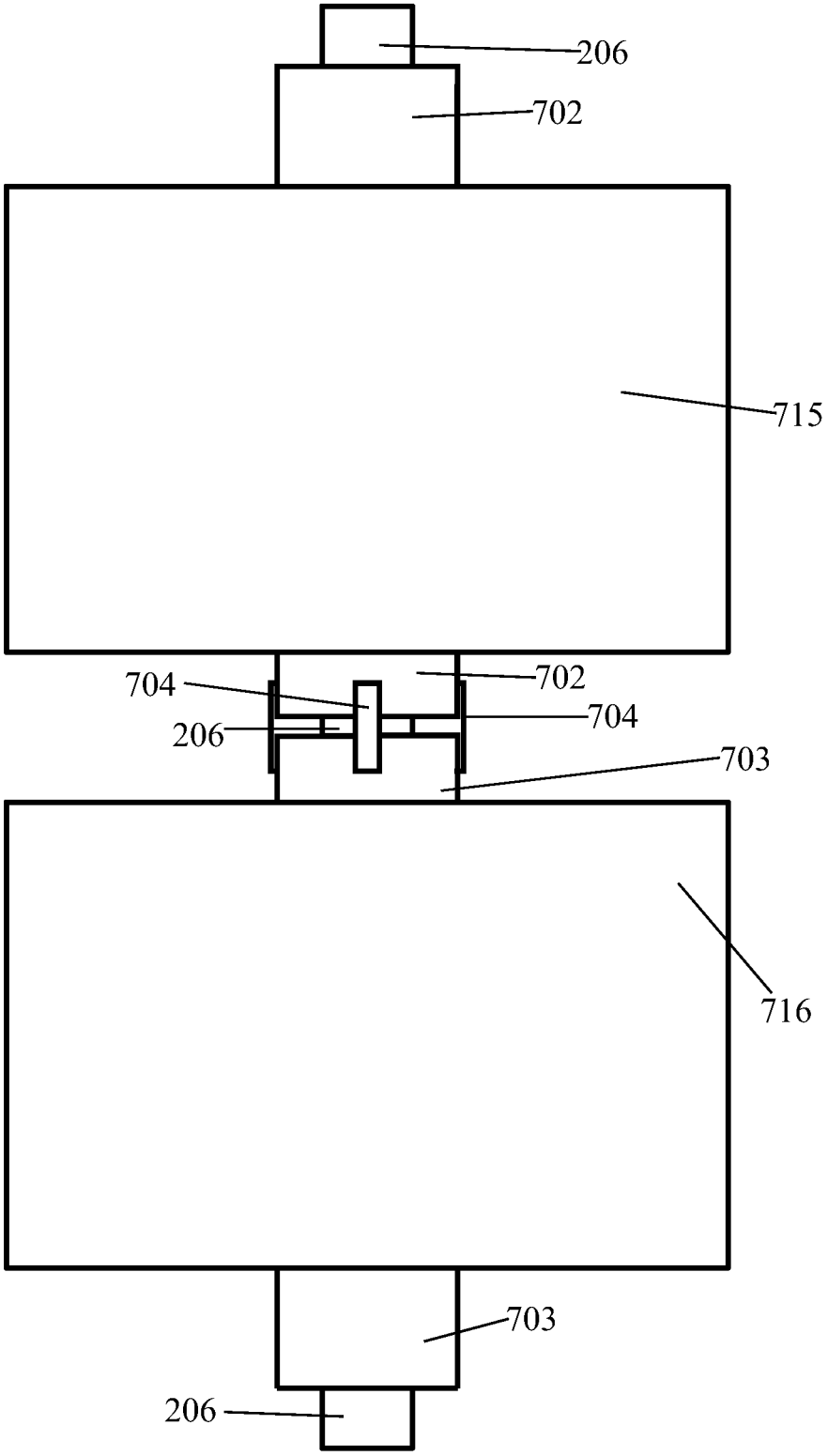

FIG. 13

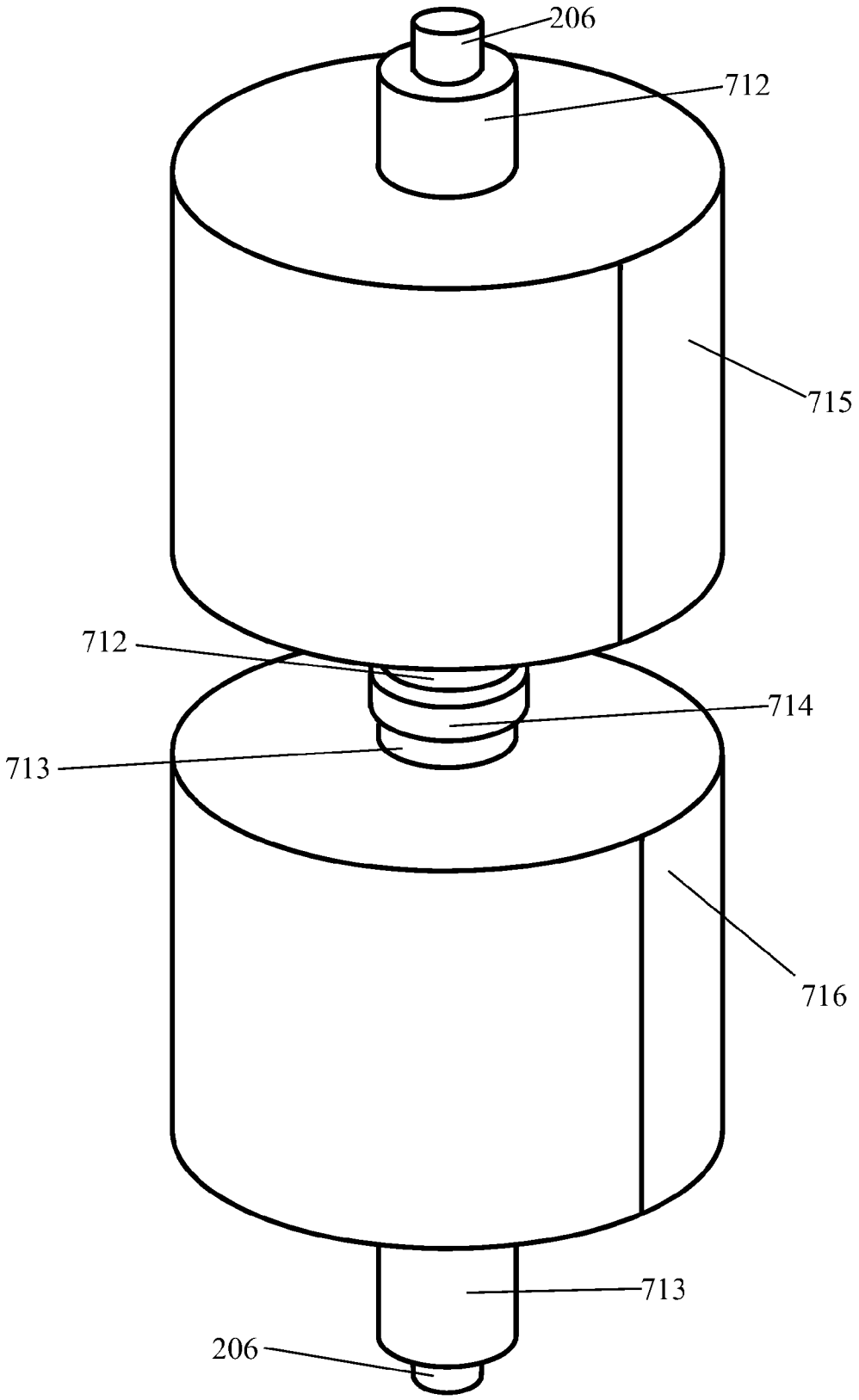

FIG. 14

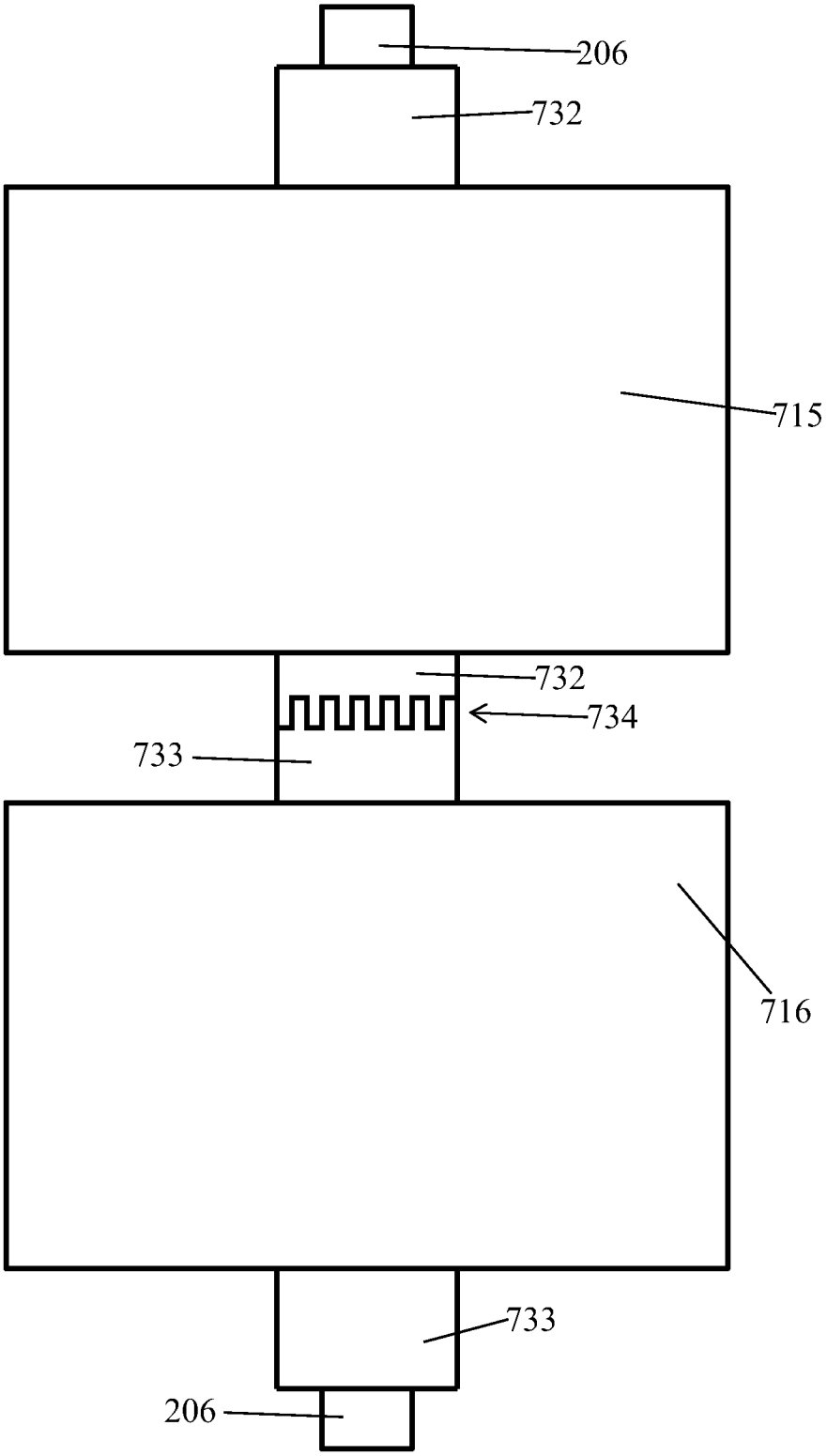

FIG. 15

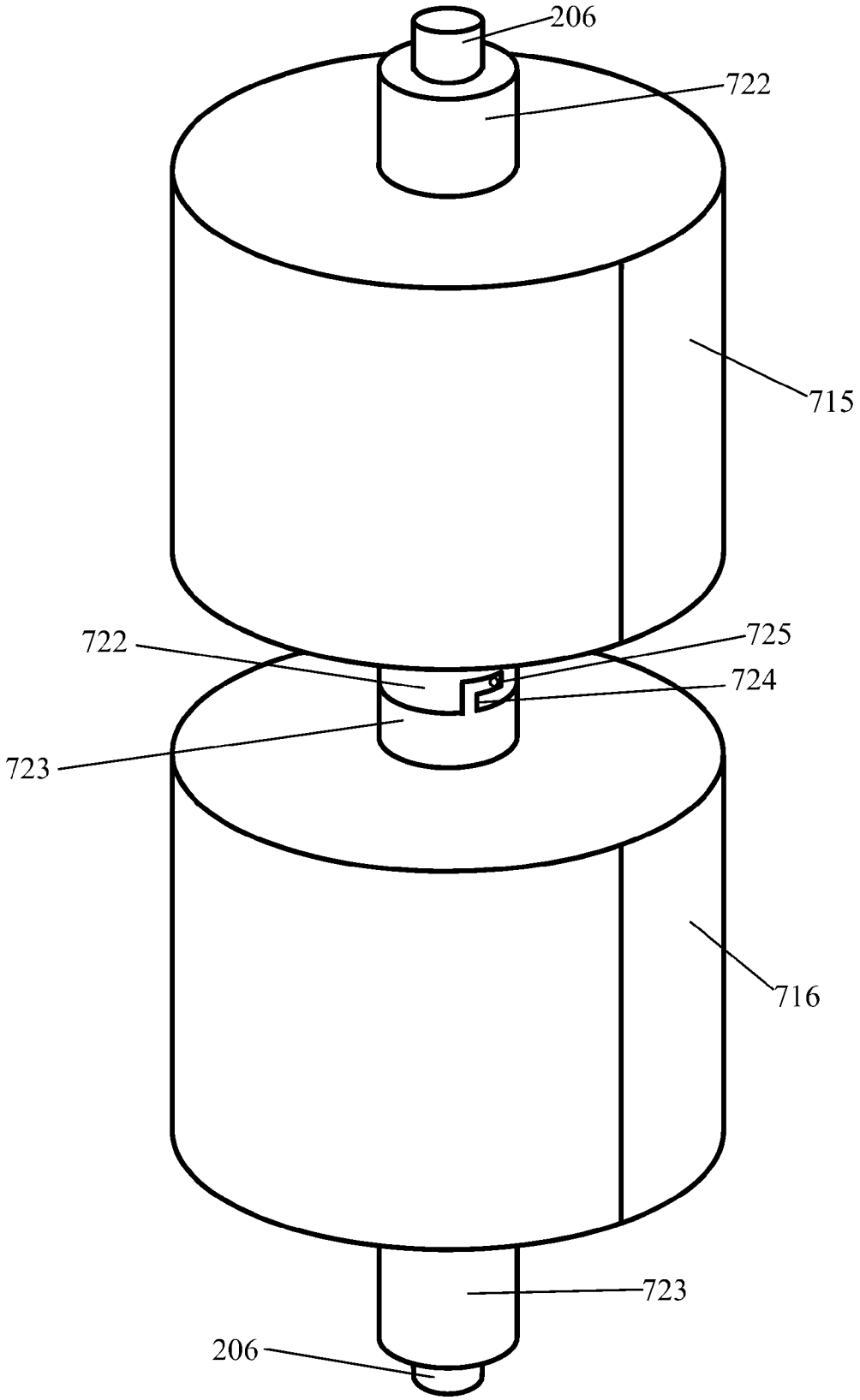

FIG. 16

PALLET ROPING AND WRAPPING APPARATUS

CROSS REFERENCE TO RELATED APPLICATIONS

This application is a divisional of U.S. patent application entitled "PALLET ROPING AND WRAPPING APPARATUS," Ser. No. 14/337,022, filed Jul. 21, 2014, now pending, which is a continuation of U.S. patent application entitled "PALLET ROPING AND WRAPPING APPARATUS," Ser. No. 14/265,179, filed Apr. 29, 2014, now pending, which is a continuation-in-part of U.S. patent application entitled "PALLET ROPING AND WRAPPING APPARATUS," Ser. No. 13/287,038, filed Nov. 1, 2011, issued as U.S. Pat. No. 8,707,664 on Apr. 29, 2014, the contents of each of which are each hereby incorporated herein by reference.

BACKGROUND

1. Technical Field

Aspects of this document relate generally to securing and protecting palletized loads.

2. Background Art

Goods to be transported in containers on, for example, ships, trucks, trains or the like frequently are packed on pallets. Such palletized goods or material, further, may be wrapped in stretch film in order to protect the material from damage caused by, for example, shifting on a pallet or being bumped by goods on adjacent pallets.

Material such as furniture or boxed goods may be completely wrapped in contiguously overlapping stretch film, effectively sealing wrapped material from contact with air or from contact with other material, which may be, for example, on other pallets. However, other types of material, such as, for example, fresh fruits and vegetables, require that air be allowed to circulate among the palletized material in order to prevent buildup of condensation or to aid in cooling or warming the material. One known method for packing these kinds of goods includes wrapping the palletized material in netting, or with a rope rather than in stretch film.

SUMMARY

According to a first aspect of particular embodiments and implementations disclosed an apparatus for securing a palletized load comprises a primary roll of stretch film, at least two secondary rolls of stretch film, and at least two sets of guides. The primary roll of stretch film is supported by a first spool support member. The at least two secondary rolls of stretch film are supported by a second spool support member. The at least two sets of guides each comprise a guide width less than a width of each of the at least two secondary rolls, each of the guides being positioned to receive a different one of the at least two secondary rolls through the respective guide, narrow the respective secondary roll to form a rope, and position the rope such that the rope fully overlaps a web formed by the primary roll as the primary roll and the at least two secondary rolls are wrapped around a palletized load.

Various implementations and embodiments may comprise one or more of the following. A first set of the at least two sets of guides may be positioned to receive a first secondary roll of the at least two secondary rolls, narrow the first secondary roll to form a first rope, and position the first rope between a central portion of the web and a first edge of the web as the primary roll and the at least two secondary rolls are wrapped around the palletized load. A second set of the at least two sets of guides may be positioned to receive a second secondary roll of the at least two second rolls, narrow the secondary roll to form a second rope, and position the second rope between the central portion of the web and a second edge of the web as the primary roll and the at least two secondary rolls are wrapped around the palletized load. The at least two secondary rolls of stretch film may comprise at least three secondary rolls of stretch film and the at least two sets of guides may comprise at least three sets of guides, a third set of guides of the at least three sets of guides being positioned between the first and second sets of guides to receive a third secondary roll of the at least three secondary rolls, narrow the third secondary roll to form a third rope, and position the third rope approximately central between the first and second edges of the web as the primary roll and the at least three secondary rolls are wrapped around the palletized load. The at least two secondary rolls of stretch film may comprise at least four secondary rolls of stretch film. The at least two sets of guides may comprise at least four sets of guides. A third set of guides of the at least four sets of guides may be positioned between the first and second sets of guides to receive a third secondary roll of the at least four secondary rolls, narrow the third secondary roll to form a third rope, and position the third rope between the first and second edges of the web as the primary roll and the at least four secondary rolls are wrapped around the palletized load. A fourth set of guides of the at least four sets of guides may be positioned between the first and second sets of guides to receive a fourth secondary roll of the at least four secondary rolls, narrow the fourth secondary roll to form a fourth rope, and position the fourth rope between the first and second edges of the web as the primary roll and the at least four secondary rolls are wrapped around the palletized load such that each the four ropes are spaced substantially equal distance from the adjacent rope of the four ropes. The at least two secondary rolls of stretch film may be positionally coupled to a common core such that the at least two secondary rolls unroll at substantially the same rate. The at least two second rolls of stretch film may each be coupled to a different core of at least two cores, the at least two cores being coupled together such that the at least two secondary rolls unroll at substantially the same rate. A perforating spindle may be positioned to perforate the primary roll of stretch film and the at least two secondary rolls of stretch film as the primary roll and the at least two second rolls are wrapped around the palletized load. The at least two secondary rolls may be colored differently than the primary roll.

According to another aspect, a method of inhibiting tearing of stretch film wrapped around a palletized load comprises dispensing a primary roll of stretch film supported on a first support member; dispensing at substantially the same rate at least two secondary rolls of stretch film supported by a second support member; narrowing a width of each of the at least two secondary rolls with at least two sets of guides to form at least two ropes; positioning, with the at least two sets of guides, the at least two ropes to fully overlap the primary roll; and simultaneously applying the primary roll and the at least two ropes to a palletized load such that the at least two ropes fully overlap a web formed by the application of the primary roll around the palletized load.

Various implementations and embodiments may comprise one or more of the following. Positioning, with the at least two sets of guides, the at least two ropes to fully overlap the primary roll may comprise positioning, with a first set of guides of the least two sets of guides, a first rope of the least two ropes between a central portion of the web and a first edge of the primary roll; and positioning, with a second set of guides of the at least two sets of guides, a second rope of the

least two ropes between the central portion and a second edge of the primary roll. The at least two sets of guides may comprise at least three sets of guides, the at least two secondary rolls may comprise at least three secondary rolls, and the at least two ropes may comprise at least three ropes, and the method may further comprise positioning, with a third set of guides of the at least three sets of guides, a third rope of the at least three ropes approximately central between the first edge and the second edge of the primary roll. The at least two sets of guides may comprise at least four sets of guides, the at least two secondary rolls may comprise at least four secondary rolls, and the at least two ropes may comprise at least four ropes, and the method may further comprise positioning, with a third set of guides of the at least four sets of guides, a third rope of the at least four ropes between the first edge and the second edge of the primary roll; and positioning, with a fourth set of guides of the at least four sets of guides, a fourth rope of the at least four ropes between the first edge and the second edge of the primary roll such that each rope of the at least four ropes is equal distance from the adjacent rope of the four ropes. Simultaneously pre-stretching the primary roll and the at least two secondary rolls of stretch film while overlapped prior to applying the primary roll and the at least two second rolls of stretch films to the palletized load. Perforating the primary roll of stretch film and the at least two secondary rolls of stretch film before applying the primary roll and the at least two secondary rolls of stretch film to the palletized load.

According to another aspect, a tamper deterring apparatus for securing a palletized load comprises a primary roll of stretch film, at least one secondary roll of stretch film, and at least one set of guides. The primary roll of stretch film supported by a first spool support member. The at least one secondary roll of stretch film is colored differently than the primary roll of stretch film and supported by a second spool support member. The at least one set of guides comprises a guide width less than a width of the at least one secondary roll and is positioned to receive the at least one secondary roll through the guide, narrow the at least one secondary roll to form a rope, and position the rope such that the rope fully overlaps a web formed by the primary roll as the primary roll and the secondary roll are wrapped around a palletized load.

Various implementations and embodiments may comprise one or more of the following. The at least one secondary roll may comprise at least two secondary rolls colored differently than the primary roll of stretch film and supported by a second spool support member, the at least one set of guides may comprise at least two sets of guides each comprising a guide width less than a width of each of the at least two secondary rolls, each of the guides may be positioned to receive a different one of the at least two secondary rolls through the respective guide, narrow the respective secondary roll to form a rope, and position the rope such that the rope fully overlaps the web formed by the primary roll as the primary roll and the second roll are wrapped around the palletized load. A first set of the at least two sets of guides may be positioned to receive a first secondary roll of the at least two secondary rolls, narrow the first secondary roll to form a first rope, and position the first rope between a central portion of the web and a first edge of the web as the primary roll and the at least two secondary rolls are wrapped around the palletized load. A second set of the at least two sets of guides may be positioned to receive a second secondary roll of the at least two second rolls, narrow the secondary roll to form a second rope, and position the second rope between a central portion of the web and a second edge of the web as the primary roll and the at least two secondary rolls are wrapped around the palletized load. The at least two secondary rolls of stretch film may comprise at least three secondary rolls of stretch film colored differently than the primary roll and the at least two sets of guides may comprise at least three sets of guides, a third set of guides of the at least three sets of guides being positioned between the first and second sets of guides to receive a third secondary roll of the at least three secondary rolls, narrow the third secondary roll to form a third rope, and position the third rope approximately central between the first and second edges of the web as the primary roll and the at least three secondary rolls are wrapped around the palletized load. The at least two secondary rolls of stretch film may comprise at least four secondary rolls of stretch film colored differently than the primary roll of stretch film. The at least two sets of guides may comprise at least four sets of guides. A third set of guides of the at least four sets of guides may be positioned between the first and second sets of guides to receive a third secondary roll of the at least four secondary rolls, narrow the third secondary roll to form a third rope, and position the third rope between the first and second edges of the web as the primary roll and the at least four secondary rolls are wrapped around the palletized load. A fourth set of guides of the at least four sets of guides may be positioned between the first and second sets of guides to receive a fourth secondary roll of the at least four secondary rolls, narrow the fourth secondary roll to form a fourth rope, and position the fourth rope between the first and second edges of the web as the primary roll and the at least four secondary rolls are wrapped around the palletized load such that each the four ropes are spaced substantially equal distance from the adjacent rope of the four ropes.

The foregoing and other aspects, features, and advantages will be apparent to those artisans of ordinary skill in the art from the DESCRIPTION and DRAWINGS, and from the CLAIMS.

BRIEF DESCRIPTION OF THE DRAWINGS

Various aspects of implementations of pallet wrapping and roping machines will hereinafter be described in conjunction with the appended drawings, where like designations denote like elements, and:

FIG. **1** is a pictorial diagram of a particular implementation of an apparatus for wrapping palletized loads;

FIG. **2** is a pictorial diagram of the particular implementation of FIG. **1** illustrating hand-held use of the apparatus;

FIG. **3***a* is a disassembled view of a subassembly of another particular implementation of a palletized load-wrapping apparatus;

FIG. **3***b* is a close-up view of a portion of FIG. **3***a;*

FIG. **4** is a view of the subassembly of FIG. **3***a* when assembled;

FIG. **5** is a pictorial diagram of a stretch wrap machine that includes a particular implementation of a rope-forming apparatus;

FIG. **6** is a pictorial diagram of a stretch wrap machine;

FIG. **7** is a flow diagram describing a particular implementation of a method of securing a palletized load;

FIG. **8** is a flow diagram describing a particular implementation of a method of protecting a palletized load;

FIG. **9** is a flow diagram depicting a particular implementation of a method of forming a plurality of ropes according to the flow diagram of FIG. **8**;

FIGS. **10***a*-**10***d* are, respectively, four embodiments of a stretch wrap machine;

FIGS. **11***a* and **11***b* are, respectively, representative top and side views of the path of stretch film travel from the rolls of stretch film through one particular embodiment of a pre-stretch carriage;

FIG. **12** is a flow diagram describing a particular implementation of a method of wrapping a palletized load;

FIG. **13** is a front view of an implementation comprising two spool cores coupled together with coupling clips;

FIG. **14** is a perspective view of an implementation comprising two spool cores coupled together with a ring-shaped coupling clip;

FIG. **15** is a side view of an implementation comprising two spool cores coupled together with integrated coupling clips in the form of coupling teeth; and

FIG. **16** is a perspective view of an implementation comprising two spool cores coupled together with a mated raised protrusion and angled slot to a palletized load.

DESCRIPTION

This disclosure, its aspects and implementations, are not limited to the specific devices and methods disclosed herein. Many additional elements, components, and procedures known in the art consistent with the intended use of the apparatus and methods described will become apparent for use with various implementations of pallet-wrapping apparatus and techniques from this disclosure. Accordingly, for example, although a particular apparatus may be disclosed, such apparatus may comprise any shape, size, style, type, model, version, material, and/or the like as is known in the art for such apparatus, consistent with the intended operation of the devices described herein.

A particular implementation of a pallet roping and wrapping apparatus **10**, which may be employed for securing a palletized load, is shown in FIG. **1**. The apparatus **10** comprises a first roll **15** and a second roll **16** of stretch film and a single spool **2** configured to support the first and second rolls **15** and **16** of stretch film. The first and second rolls **15** and **16** may be positioned essentially contiguously on the spool **2**. The apparatus **10** further may comprise a baseplate **40** and a spool support member (which may be a rod, not shown) adapted to support the spool **2**, the spool support member having an end affixed to and supported by the baseplate **40**. The spool **2** may have an axis that typically coincides with a center axis shared by the first and second rolls **15** and **16** of stretch film. The illustrated implementation still further comprises a pair of guides, first guide **30** and second guide **31**, and a guide support member **20**, which may comprise, for example, a rod. The guide support member **20** may have an end coupled to and supported by the baseplate **40**. That is, the spool support member and the guide support member **20** may share mechanical support provided by the baseplate **40**. The guide support member **20** may have an axis oriented to be substantially parallel to the axis of the spool **2** in normal operation. In the illustrated implementation of FIG. **1**, the first and second guides **30** and **31** are formed as rings. First guide **30** is secured to the guide support member **20** by a first collar **35** that may be adjustably positioned on the guide support member **20** at a location nominally opposite a midpoint of the first roll **15**. Likewise, second guide **31**, which also may have an adjustable position according to a location of a second collar **36**, may be located nominally opposite a midpoint of the second roll **16**. The illustrated positions of first and second guides **30** and **31** are only examples, as positions of the first and second guides **30** and **31** may be adjusted in either a ganged fashion or independently according to needs or preferences of a user of the apparatus **10**.

Stretch film from first and second rolls **15** and **16** may be threaded or otherwise passed through first and second guides **30** and **31** to form a first rope **50** and a second rope **51** of stretch film. It should be noted that in the industry a "rope" is also sometimes called a "band." It should also be noted that there is no need to cut or otherwise modify, distort, or weaken the stretch film coming from the roll. Any such cutting, modifying, or distorting is obviated by the use of separate first and second rolls **15** and **16** of stretch film. Indeed, known devices that require cutting of stretch film or that employ cutting or distorting of stretch film in their operation may cause inconvenience and expense to users of the known devices as a result of consequential breaking and/or tearing of the stretch film.

It should be understood that the present disclosure contemplates using a plurality of rolls of stretch film and that first and second rolls **15** and **16** in the particular implementation illustrated in FIG. **1** are not intended to be limiting. Likewise, particular implementations of apparatus for securing palletized loads may comprise a plurality of guides (e.g., first and second guides **30** and **31**, or more) being adjustably secured to a guide support member **20** by a plurality of collars (e.g., first and second collars **35** and **36**). An implementation comprising such a plurality of rolls and guides may be employed to form a plurality of ropes (e.g., first and second ropes **50** and **51**, or more) of stretch film with which to wrap or otherwise secure a palletized load.

Adjustment of positions of the guides (e.g., first and second guides **30** and **31**) may be accomplished in one exemplary implementation using set screws (not shown) employed in the collars in a conventional manner. Adjustable clamps may replace the collars in other implementations without departing from any intention of the present disclosure.

An axial handle **60** may be coupled to an end of the spool support member, the axial handle having an axis nominally aligned with the center axis shared by the spool support member and the first and second rolls **15** and **16** of stretch film. A side handle **70**, further, may be affixed to the baseplate **40**. A first user supporting the apparatus would hold both the axial handle **60** and the side handle **70**. Arm **80** and hand **81** (See FIGS. **1** and **2**) are from the user supporting the apparatus. A second user may draw the first and second ropes **50** and **51** using hand **82**. The side handle **70** and the axial handle **60** may be employed by a user to support the particular apparatus **10** as illustrated in FIG. **2**. Alternative or differently configured handles may be used. As is further illustrated in FIG. **2**, the side handle **70** and the axial handle **60** may be employed by a user move the apparatus **10** around a palletized load in order to extend first and second ropes **50** and **51**, thereby wrapping and/or securing the palletized load.

For example, a first user may support the apparatus **10** by using a hand on a first arm **80** to grasp the side handle **70** and a second hand **81** to grasp the axial handle **60**. First and second ropes **50** and **51** may be grasped by a hand **82** of a second user to hold ends of the first and second ropes **50** and **51** while the first user circumnavigates (e.g., walks around) a palletized load situated on a nominally stationary pallet **90**, thereby wrapping and securing the palletized load. In another particular implementation described more particularly with reference to FIG. **6**, a pallet wrapping device remains stationary while a palletized load is rotated in order to accomplish wrapping of ropes of stretch film around the load.

FIG. **3***a* is a disassembled view of a subassembly **110** of a particular implementation of a stretch wrap machine **170** (FIG. **5**), which may function as a palletized load wrapping apparatus. Elements of this subassembly **110** of the stretch wrap machine **170** include a plurality of rollers **120** (four are shown in FIG. **3***a*), which may be used to form guides that may perform a function similar to first and second guides **30** and **31** introduced in FIGS. **1** and **2**. The rollers **120** may have affixed thereto collars **130** that may slidably and adjustably fit over a rod **161** having first and second ends, the rod **161** being

adapted to function as a supporting member for the plurality of rollers **120**. The collars **130** may include set screws **140** suitable for facilitating adjustment of positions of the plurality of rollers **120** along the rod **161**. The illustrated subassembly **110** further comprises a pair of brackets **145** adapted to provide mechanical support for the first and second ends of the rod **161**. FIG. **3***b* is a close-up view of the collars **130**, rollers **120** and set screws **140**.

FIG. **4** is a partially-assembled subassembly **110** of FIG. **3***a* illustrating the plurality of rollers **120** affixed to the supporting member or rod **161** by collars **130**. The partially-assembled subassembly **110** further includes a wrap machine roller **150** having ends mechanically secured by the pair of brackets **145** that also secure ends of the rod **161** in a manner well-understood by one skilled in the art.

FIG. **5** is a pictorial diagram of a stretch wrap machine **170** that includes the subassembly **110** described above with reference to FIGS. **3** and **4**. The stretch wrap machine **170**, which may be employed as a palletized load-wrapping apparatus, may be configured for applications suited to wrapping palletized loads that arrive at the stretch wrap machine **170** on, for example, a conveyer belt, front loader or other transport medium. Typical implementations of the stretch wrap machine **170** include a rotating platform (not shown) on which may be placed a palletized load ready for wrapping. A driving mechanism (not shown) may cause the platform to rotate while a remainder of the stretch wrap machine **170** remains essentially stationary relative to the palletized load intended to be secured by the stretch wrap machine **170**. It is understood that "stationary" in the present context means that the palletized load may be free to rotate, but that the load does not undergo translational motion once it arrives at the stretch wrap machine **170** until after any wrapping procedure is completed.

The implementation of the stretch wrap machine **170** illustrated in FIG. **5** comprises the subassembly **110** described in greater detail with reference to FIGS. **3** and **4**. The illustrated implementation further comprises elements not shown in FIG. **5**, but that may be similar to those illustrated in another implementation **270** of a stretch wrap machine shown in FIG. **6**. These elements may include a spool **202**, and a plurality of rolls of stretch film, e.g., first roll **215** and second roll **216** disposed essentially adjacently on the spool **202**.

Returning to FIG. **5**, stretch film may be passed between pairs of rollers **120**, which may function as guides, thereby forming ropes **180** of stretch film. Although two pairs of rollers **120** and two ropes **180** are illustrated in FIG. **5**, the description applies as well to a plurality of pairs of rollers, which may facilitate forming of a corresponding plurality of ropes of stretch film. As the palletized load rotates and a starting point for the plurality of ropes of stretch film is established on the palletized load, the palletized load may become wrapped with the plurality of ropes of stretch film.

FIG. **6** is a pictorial diagram of a stationary stretch wrap machine **270** that may include elements described with reference to FIG. **5**. The illustrated implementation comprises a spool **202** mounted on a spool support member **206**, which is coupled at a first end on a platform **205** and supported on a second end by a bracket **210** that is essentially rigidly connected with the platform **205** by a connecting member **208**. The spool **202** has disposed (e.g., wound) thereon first and second rolls **215** and **216** of stretch film, axes of the first and second rolls **215** and **216** essentially coinciding with an axis of the spool **202**. Typically, first and second rolls **215** and **216** are disposed next to each other on the spool. The first and second rolls **215** and **216** may be disposed directly on the spool or disposed on separate spools that are then disposed on a common spool or roller (e.g. a common core with two spools around it and coupled to it) with the purpose that the first and second rolls necessarily unroll at substantially the same rate. If the first and second rolls **215** and **216** do not spin at substantially the same rate, as is necessitated by being on the same spool **202** or being otherwise equivalently forced to spin at substantially the same rate, the operation is less effective.

A guide support member **261**, which is supported at a first end by the platform **205** and at a second end by the bracket **210**, may be disposed nominally parallel to and at a convenient distance from the spool **202**. That is, guide support member **261** may have an axis that is parallel to the axis of the spool **202**. A plurality of rollers **220**, which may be arranged in pairs to form guides, two of which are illustrated, for example, in FIG. **6**, are adjustably connected with the guide support member **261** by a plurality of collars **230**. The collars **230** may be configured so that positions of the plurality of rollers **220** may be adjusted.

Stretch film from the first and second rolls **215** and **216** pass through a pair of guides (formed by pairs of rollers **220** in the implementation shown in FIG. **6**), forming first and second ropes **280** and **281** of stretch film. This disclosure, further, contemplates using two or more rolls, i.e., a plurality of rolls of stretch film in order to form a plurality of ropes of stretch film, by passing the stretch film through a plurality of guides although only two rolls, guides and ropes are illustrated in FIG. **6**.

The platform **205** may have disposed thereon a support **212** that supports a rotatable platform **213** on which may be placed a pallet **290** of palletized goods **295** shown in dotted outline in FIG. **6** to reflect an arbitrary nature of an arrangement of the palletized goods **295**. In operation, the pallet **290** and the palletized goods **295** may arrive at the stretch wrap machine **270** and may be placed onto the rotatable platform **213**. First and second ropes **280** and **281** of stretch film may be formed as described herein and attached at initial ends (not illustrated) to the palletized load **295** in a known manner. The rotatable platform **213** then may be rotated (using, for example, a known type of motor and shaft arrangement not shown in FIG. **6**), thereby pulling stretch film through the guides and extending first and second ropes **280** and **281** to wrap the palletized goods **295** as already described. It may be well to point out that although the stretch wrap machine **270** includes a rotating platform **213**, portions of the stretch wrap machine **270** that form the stretch ropes **280** and **281** (i.e. the palletized load-securing apparatus) are fixed relative to the palletized load **295** being secured and relative to the rotatable platform **213**.

Referring now to FIGS. **13-16**, in some implementations the stretch wrap machine may comprise a plurality of spool cores and a plurality of rolls of stretch film, at least one on each of the spool cores. In these and other implementations, the plurality of spool cores may be coupled to one another with a coupling clip in such a manner that each of the plurality of spool cores and each of the plurality of rolls of stretch film all simultaneously rotate at the same rate as the plurality of rolls are unwound. Particular manners of coupling the plurality of spool cores to one another described herein are example implementations and do not encompass each and every implementation contemplated. For example, while each of FIGS. **13-16** illustrate two spool cores and two rolls of stretch film, other implementations may comprise any number of a plurality of spool cores coupled together and any number of rolls of stretch film. Furthermore, in some implementations, any number of rolls of stretch film may be associated with a single spool core.

Positionally coupling the plurality of rolls of stretch film to the plurality of spool cores, and coupling the plurality of spool cores to one another results in a uniform rotation rate of each of the plurality of spool cores and plurality of rolls about an axis. This uniform rotation rate assists in maintaining a uniform tautness of the plurality of stretch film wraps as the palletized load is wrapped. Studies have shown that maintenance of a taut stretch film wrap as the palletized load is wrapped results in a more effectively wrapped and secured palletized load, resists undesired stretch wrap tearing during the wrapping process, and allows much less stretch wrap to be used.

In various implementations, the plurality of coupling devices may either be removably or permanently coupled to one another. As illustrated herein, some implementations utilize a clip to couple the spool cores together. The clip(s) may be integral to the first and/or second spool core, or may be a separate clip. In some implementations, the plurality of spool cores may be further or alternatively be coupled to a separate core to assist with uniform rotation. In such an implementation, the core would then rotate at the same rate as the plurality of spool cores and the plurality of rolls.

Referring specifically to FIG. **13**, a first spool core **702** coupled to a second spool core **703** and supported by a support member **206** is illustrated. In the implementation of FIG. **13**, the first spool core **702** is coupled to the second spool core with a plurality of coupling clips **704**. The coupling clips **704** may be comprised of any variety of materials, such as but not limited to plastics, metals, rubbers, and the like. Furthermore, the coupling clips **704** may comprise any size or dimension. In the implementation illustrated in FIG. **13**, there is a space between the first spool core **702** and the second spool core **703**, and an even larger space between the first roll **715** and the second roll **716**, though this is not required. In other implementations, the first spool core **702** and the second spool core **703** may abut one another. Likewise, in some implementations the first roll **715** and the second roll **716** may nearly abut one another or form a nearly contiguous surface. In some implementations, only a single coupling clip **704** may couple the first spool core **702** and the second spool **703** together. In other implementations, any number of coupling clip **704** may couple the first **702** and second **703** spool cores together. The coupling clip in this and other embodiments and implementations described hereafter causes the first roll **715** and the second roll **716** to rotate at the same rate about the support member as if they were one a single, contiguous core.

The coupling clip **704** may comprise a protrusion, nub, or at least one pyramid like point near each end of the coupling clip on a surface that faces the plurality of spool cores **702**, **703**. The plurality of spool cores **702**, **703** may further comprise holes or depressions to mate with the protrusion, nub, or pyramid of the coupling clip **704**. In other implementations, the pyramid like points may be pressed into the surface of the spool core **702**, **703**, thus attaching the coupling clip **704** to the spool core. In still other implementations, the coupling clip **704** or the plurality of spool **702**, **703** cores may comprise an adhesive that adheres the coupling clip **704** to the spool core **702**, **703**. The coupling clips **704** may, in other implementations, comprise any type of mechanism or compound for coupling the clip **704** to the spool core **702**, **703**.

Referring specifically to FIG. **14**, another implementation comprising a first spool core **712** coupled to a second spool core **713** is illustrated. In the implementation of FIG. **14**, the first spool core **712** and the second spool core **713** are coupled together with a coupling clip **714** in the form of a coupling ring **714**. The coupling ring **714** may comprise any variety of materials, such as but not limited to plastics, metals, rubbers, and the like. In the implementation illustrated in FIG. **14**, the spool core **712**, **713** each fit within the coupling ring **714**. In other implementations, the support member **206** may fit within the coupling ring **714**, while the coupling ring fits within the ends of the spool core **712**, **713**. The coupling ring **714** may attach to the spool cores **712**, **713** through a number of different manners.

For example, in an implementation, the spool core **712**, **713** may each comprise threading that allows the spool core **712**, **713** to be screwed into corresponding threading on the coupling ring **714**. Similarly, coupling ring **714** may be screwed into the ends of the either or both the spool cores **712**, **713**. In other implementations, an adhesive may be use to attach the coupling ring **714** to the spool cores **712**, **713**. The adhesive may be utilized whether the coupling ring **714** is inside the spool cores **712**, **713**, or outside the spool cores **712**, **713**. In still other implementations, the coupling ring **714** may be comprised of a stretch material that may be stretch to fit around the ends of the spool cores **712**, **713**, but then tightens to prevent the spool cores from rotating at different rates. In still other implementations, the coupling ring may comprise tape or other adhesive material wrapped around abutting ends of the spool cores **712**, **713**. In another implementation, the coupling ring **714** may comprise a clamp that is closed around abutting ends of the spool cores **712**, **713**.

Referring specifically to FIG. **15**, in some implementations, the first spool core **732** and the second spool core **733** may be coupled together with a series of coupling clips **734** in the form of coupling teeth **734**. The coupling teeth **734** may comprise any shape, size, or configuration that allows the teeth of the first spool core **732** to fit within gaps between the teeth of the second spool core **733**, and vice versa. When engaged, with each other, the coupling teeth **734** prevent the spool cores **732**, **733** from rotating at different rates as the rolls of stretch film **715**, **716** are unwound or unrolled. The use of adhesives or a secondary coupling device may be utilized to enhance the effectiveness of the coupling teeth **734**.

Referring specifically to FIG. **16**, in some implementations, an end of the second spool core **723** may fit within an end of the first spool core **722** with a coupling clip configured thereon. In the specific implementation of FIG. **16**, the second spool core **723** comprises a coupling clip in the form of a protruding nub **725** that fits into an angled channel or reentrant opening **724** on the first spool core **722**. When engaged in the reentrant opening **724**, the nub **725** may act to lock the first **722** and second **723** spool cores together.

In other implementations, wherein an end of the second spool core **723** fits within an end of the first spool core **722**, the spool core **722**, **723** may be coupled together with a pin that fits within matching holes on the spool core **722**, **723**. In some implementations, the pin may also fit within a hole or depression on the support member **206**.

In another implementation, the second spool core **723** may comprise a coupling clip in the form of a spring-loaded button and the first spool core may comprise a coupling clip in the form of a hole sized to fit the button within the hole. A user or a machine may then depress the button as the second spool core **723** is slid within the first spool **722**. When the button meets the area of the hole of the first spool core **722**, the spring forces the button out, thus locking the end of the second spool core **723** in place such that both the first **722** and second **723** spool cores rotate at the same rate as the rolls **715**, **716** are unwound.

In another implementation, an end of the second spool core **723** may comprise a coupling clip in the form of exterior threading that allows the end of the second spool core **723** to

be screwed into corresponding coupling clip in the form of interior threading on the inside of an end of the first spool core **722**.

FIG. **7** is a flow diagram describing a particular implementation of a method of securing a palletized load. According to this implementation of the method, an apparatus is provided, the apparatus having a first rod that supports a single spool supporting a plurality of rolls of stretch film and a second rod that supports a plurality of guides (step **310**). The plurality of rolls of stretch film may be disposed on the single spool in essentially adjacent positions, i.e., substantially contiguously. As a particular example, the apparatus described supra with reference to FIG. **6** may be provided, wherein the apparatus comprises a spool support member **206**, which may be a rod, supporting the spool **202** on which are wound first and second rolls of stretch film **215** and **216** disposed substantially contiguously. The second rod of the implementation of FIG. **7** may be implemented as, for example, the guide support member **261** illustrated in FIG. **6**, the guide support member **261** being rigidly supported by the platform **205** and the bracket **210**, and having pairs of guides **220** adjustably secured thereto by the plurality of collars **230**.

The implementation of the method of FIG. **7** further comprises passing stretch film from the plurality of rolls through the plurality of guides to form a plurality of ropes of stretch film (step **315**). As a specific example, FIG. **6** illustrates stretch film from first roll **215** and second roll **216** passing through guides formed by pairs of rollers **220** to form first rope **280** and second rope **281** of stretch film. As another example, FIG. **1** illustrates stretch film from first roll **15** and second roll **16** passing through ring-shaped first and second guides **30** and **31** to form first and second ropes of stretch film **50** and **51**.

The implementation of the method illustrated in FIG. **7** still further comprises securing the palletized load by wrapping the palletized load with the plurality of ropes formed in step **315**, thereby securing the palletized load (step **320**). It should be noted that no cutting of stretch film is employed in the illustrated implementation of the method. Exemplary implementations of this securing step (i.e., step **320**) are illustrated in FIGS. **2** and **5**A. In FIG. **2**, a user may transport a palletized load-wrapping apparatus around a palletized load, thereby securing the palletized load with first and second ropes **50** and **51** of stretch film. The first and second ropes **50** and **51** are formed by passing the stretch film through first and second guides **30** and **31**. In FIG. **6**, a stretch machine **270**, operating as described herein, secures a palletized load **295** by wrapping first and second ropes **280** and **281** around the palletized load **295** as the palletized load **295** rotates. First and second ropes are formed by passing stretch film through guides formed by pairs of rollers **220**. Neither the implementation of FIG. **2** nor the implementation of FIG. **6** includes a mechanism for cutting stretch film, nor does the implementation of FIG. **7** contemplate any cutting of stretch film.

FIG. **8** is a flow diagram describing another particular implementation of a method of protecting a palletized load. According to the illustrated implementation, a plurality of rolls of stretch film (e.g., two or more rolls) is provided on a single spool (step **340**). In a typical implementation, the single spool has an axis. A particular implementation that provides a plurality of rolls of stretch film is illustrated in FIG. **1**, wherein is illustrated first and second rolls **15** and **16** of stretch film provided essentially contiguously positioned on a single spool **2**. Another particular implementation that provides such a plurality of rolls of stretch film is shown in FIG. **6**, which shows first and second rolls **215** and **216** on single spool **202**.

The implementation of FIG. **7** further comprises passing a portion of stretch film from each roll through a rope guide (step **345**). For example, stretch film from each of the first and second rolls **15** and **16** of stretch film may be passed through respective first and second guides **30** and **31** (functioning as rope guides) in the particular implementation shown in FIG. **1**. As another example, FIG. **6** illustrates stretch film from each of first and second rolls **215** and **216** of stretch film passed through guides formed by pairs of rollers **220**, the guides functioning as rope guides.

The implementation of FIG. **8** still further comprises forming a plurality of ropes without cutting the stretch film (step **350**). One particular implementation of a method of forming the plurality of ropes is illustrated in the flow diagram of FIG. **9**, described infra.

The implementation of FIG. **8** yet still further comprises securing the palletized load with the plurality of ropes (step **355**). The securing may be accomplished using particular implementations already described. For example, FIG. **2** illustrates a pair of users cooperating to secure a palletized load. A first user (i.e. one having first arm **80** and second hand **81**) moves around a palletized load while supporting an apparatus **10** adapted to form first and second ropes **50** and **51** of stretch film. A second user having hand **82**, grasps initial ends of the first and second ropes **50** and **51**. As the first user moves around the palletized load, the first and second ropes **50** and **51** become extended, wrapping, and thereby securing, the palletized load. As another example, a palletized load **295** may be secured as illustrated in FIG. **6** by first and second ropes **280** and **281** of stretch film formed by a stretch wrap machine **270** operating as described herein. As the palletized load **295** rotates on the rotatable platform **213**, first and second ropes are extended and wrapped around the palletized load **295** to secure the palletized load **295**.

FIG. **9** is a flow diagram depicting a particular implementation of a method of forming a plurality of ropes according to the flow diagram of FIG. **8**. The illustrated implementation comprises providing a plurality of guides (step **370**) adjustably secured to a support member disposed parallel to the axis of the spool referenced in step **340** of FIG. **8**. For example, the providing of guides may be accomplished as illustrated in FIG. **2**, wherein first and second guides **30** and **31** are adjustably secured to guide support member **20** by first and second collars **35** and **36**. Guide support member **20** is secured in a position having its axis oriented in a direction parallel to an axis of the spool **2** by baseplate **40**. In FIG. **6**, a pair of guides is provided, each guide formed by a pair of rollers **220** adjustably secured to a guide support member **261** by collars **230**, wherein the axis of the guide support member **261** is nominally parallel to the axis of the spool **202** as already described. The particular implementation of FIG. **9** further comprises passing stretch film from the plurality of rolls through the plurality of guides (step **375**). See, for example, FIG. **1**, wherein stretch film from first roll **15** and second roll **16** is passed through, respectively, first guide **30** and second guide **31**. Similarly, in FIG. **6**, stretch film from first roll **215** passes through a guide formed by a pair of rollers **220**, and stretch film form second roll **216** passes through another guide formed by another pair of rollers **220**.

The particular implementation of FIG. **9** still further comprises pulling stretch film through the plurality of guides in order to cause formation of the plurality of ropes of stretch film (step **380**). This step may be accomplished as illustrated in FIG. **1** wherein, for example, first rope **50** is bunched up as stretch film from first roll **15** passes through the first guide **30**, thereby forming the first rope **50**. Additional ropes may be

similarly formed. In FIG. **5**, first rope **180** is formed when stretch film from a first roll is guided by a pair of rollers **120**.

FIG. **12** is a flow diagram depicting a particular implementation of a method of securing a palletized load. In an implementation, the method may comprise providing an apparatus comprising a support member, a plurality of spool cores, and a plurality of rolls of stretch film wound around the plurality of spool cores (step **605**), at least one roll of stretch film on each of the plurality of spool cores. In an implementation of the method, the plurality of spool cores may comprise a first and at least a second spool core. The plurality of rolls of stretch film may comprise a first roll of stretch film and at least a second roll of stretch film. In various implementations, the plurality of rolls of stretch film wound around the plurality of spool cores may comprise the first roll of stretch film wound around the first spool core and the second roll of stretch film wound around the second spool core.

In an implementation, the method may further comprise removably coupling the plurality of spools to each other (step **610**). Removably coupling or coupling the plurality of spools together in general ensures that all the plurality of spool cores rotate at the same rate when the plurality of rolls of film are unrolled.

In an implementation, the method may further comprise passing the stretch film from the plurality of rolls through a plurality of guides at the same rate (step **615**). As the stretch film is passed from the plurality of rolls through the plurality of guides, a plurality of stretch film wrap bands or ropes are formed.

In an implementation, the method may further comprise adjusting the characteristics of the stretch film wrap (step **620**). Adjusting the characteristics of the stretch film may comprise adjusting a width of one of the plurality of adjustable guides through which one of the plurality of stretch film wrap passes.

In an implementation, the method may further comprise securing the palletized load through wrapping the palletized load with the plurality of stretch film wraps (step **625**). This may be accomplished after passing the stretch film through the plurality of adjustable guides.

It should be emphasized that positions of guides in the particular implementations of methods described in FIGS. **6-8** and FIG. **12** are adjustable as described with reference to, for example, FIG. **1** and FIG. **6**. In a case of guides formed as rings (see, for example, FIG. **1**), the rings may be adjusted either in a ganged arrangement or independently. Likewise, the guides formed by rollers **220** (FIG. **6**) may be three-way adjustable: 1) Pairs of rollers may be moved in a ganged fashion; 2) pairs of rollers may be moved independently; and 3) rollers forming a pair may be moved farther apart or closer together in order to change a characteristic of ropes of stretch film according to preferences of a user.

FIG. **10***a* is a pictorial diagram of a stretch wrap machine **400** that may include elements described with reference to FIG. **6**. The illustrated implementation comprises carriage **405**, moveably coupled to a carriage support **410**. During operation of the stretch wrap machine **400**, the carriage **405** is mechanically moved up and down the support **410** through a combination of gears and drives. A comparable carriage support and carriage system currently on the market is the SMH-200 Stretch Wrapper, sold by Wulftec International of QC, Canada. Those of ordinary skill in the art readily understand the use and operation of a conventional stretch wrapping machine of this type. FIG. **10***a* includes on the carriage **405** a conventional pre-stretch carriage **420** configured to stretch the stretch film passed through it prior to applying the stretch film to a pallet of goods to be wrapped, and at least one primary roll of stretch film **422** on a first or primary spool **452**. Stretch film from spool **452** may be referred to as a web **440**.

Different from a conventional stretch wrapping machine, however, the implementation of FIG. **10***a* includes at least a secondary roll of stretch film **415** or **416** supported on the carriage by a secondary spool **402**. For this particular implementation, the stretch film web **440** from the first roll of stretch film **422** is simultaneously fed through the pre-stretch carriage **420** with the stretch film **436** and **438** from the at least a second roll of stretch film **415** or **416** after it has passed through guides **425**. Typically, secondary rolls such as first and second rolls **415** and **416** are disposed next to each other on the second spool **402**. The secondary rolls **415** and **416** may be disposed directly on a single secondary spool **402** or disposed on separate secondary spools that are then disposed on a common spool or roller (e.g. a common core with two spools around it and coupled to it) or coupled to one another as described elsewhere in this document, with the purpose that the secondary rolls **415** and **416** necessarily unroll at substantially the same rate. If the secondary rolls **415** and **416** do not spin at substantially the same rate, as is necessitated by being on the same spool **402** or being otherwise equivalently forced to spin at substantially the same rate, the operation is less effective. In an alternative embodiment, only a single secondary roll **416** is mounted on the second spool **402** and the film from the two separate rolls simultaneously feed through the pre-stretch carriage.

A guide support **461**, which is also supported by and coupled to the carriage **405** and at a second end by bracket **410**, may be disposed nominally parallel to and at a convenient distance from the second spool **402**. That is, guide support **461** may have an axis that is parallel to the axis of the spool **402**. A plurality of rollers **425**, which may be arranged in pairs to form guides, two of which are illustrated, for example, in FIG. **10***a*, are adjustably connected with the guide support member **461** by a plurality of collars **430**. The plurality of rollers **425** is positioned such that stretch film from secondary rolls **415** and **416** pass through the guide. The space between the guides **425** is the guide width **423**. Alternatively, multiple guides extending from a common post may be coupled to the guide support member **461** to establish a guide width **423**. The guide width **423** is less than the width of either the secondary roll **415** and **416**, such that when stretch film is passed from secondary rolls **415** and **416** through roller guides **425**, the width of each stretch film is narrowed to what is commonly referred to as a "rope" or alternatively referred to as a "band".

According to some aspects, the collars **430** may be configured so that positions of the plurality of rollers **425** may be adjusted on the guide support **461**. In other embodiments, the rollers **425** or guides are fixedly positioned on the guide support **461**. In a non-limiting embodiment like that shown in FIG. **10***a*, the rollers **425** are positioned such that each of the two ropes **436**, **438** are positioned between a central portion **820** of the web **440** and a different edge of the two opposing edges **816**, **818** of the web **440** when wrapped around the palletized load **495**. In other embodiments, the rollers **425** may more particularly be positioned such that each of the two ropes **436** are positioned proximate opposing edges **816**, **818** of the web **440** when wrapped around the palletized load **495**.

As stretch film from the secondary rolls **415** and **416** passes through a pair of guides (formed by pairs of rollers **425** in the implementation shown in FIGS. **10***a*-**10***d*), first and second ropes **436** and **438** of stretch film are formed. This disclosure, further, contemplates using one roll or two or more rolls. A plurality of rolls of stretch film in order to form a plurality of ropes of stretch film by passing the stretch film through a

plurality of guides could be more than two although only two rolls, guides and ropes are illustrated in FIG. **10***a*. FIG. **10***d* illustrates another particular implementation of a pallet wrapping system **502** with a carriage **504** moveably mounted to a support **410** as with the particular implementation of FIG. **10***a*, but this particular implementation includes a spool **402** with only a single roll of stretch film **505** wound around the spool **402** (rather than the two secondary rolls **415** and **416** of FIG. **10***a*). The setup for FIG. **10***d* still includes the guides **425** and guide support **461**, but only one set of guides **425** to form only one wide rope **505**. As illustrated, the first spool **452** feeds a web of stretch wrap **440** over a perforating spindle **510** having a plurality of pins/needles/spikes extending from it to perforate the web of stretch wrap **440** feeding across it before it enters the pre-stretch carriage **420**.

Although, for purposes of clear illustration FIGS. **10***a*-**10***d* are shown to simultaneously dispose the web **440** and the ropes **436** and **438** or **505** on the palletized load with the web **440** closest to the load, this is not required and in some cases not preferred. In alternate implementations of any of the various embodiments described throughout this disclosure may be accomplished by simply reversing the positions of the rolls, or by wrapping the palletized load the other direction. In such implementations, the ropes **436** and **438** or **505** will be simultaneously disposed on the palletized load with the web **440** with the ropes **436** and **438** or **505** closest to the palletized load. In particular applications it may be desirable and advantageous to have the web **440** closest to the load while wrapping and in other applications it may be desirable and advantageous to have the web **440** covering the ropes **436** and **438** or **505** depending upon the type of load being wrapped and whether the web **440** and/or ropes **436** and **438** or **505** are perforated.

Embodiments of stretch wrap machines having a plurality of ropes **436**, **438** that fully overlap the web **440** are advantageous to conventional strep wrap machines having ropes that do not fully overlap the web or only a single rope that fully overlaps the web. As used herein, the term fully overlapping or fully overlaps means that the edges of the rope **436**, **438** are positioned between the edges of the web **440** when the applied to a palletized load **495**.

Having a plurality of ropes that fully overlap the web **440** acts as reinforcement to the web **440**. Conventional wrapping machines and techniques typically utilize three to five wraps at the bottom of the load and three to five wraps at the top of the load. This results in little strength in the middle of the palletized load. To remedy this, users of conventional wrapping machines are required to hand-wrap the load again for extra strength, particularly in the middle. By utilizing stretch wrap machines having a plurality of ropes that fully overlap the web, as contemplated herein, the middle of a palletized load is wrapped at strengths that far exceed conventional wrapping machines.

Another advantage of a stretch wrap apparatus having a plurality of ropes that fully overlap the web when applied to a palletized load is tear-inhibiting effect of the ropes on the web. Such tears may occur after contact with an object or may even occur as a manufacturing defect of the wrap. In conventional pallet wrapping machines, when the web starts to tear or cut, the tear or cut continues unabated until the tear meets the edge of the web and the web separates. In embodiments of a wrapping apparatus having a plurality of ropes that fully overlap the web, the tear is inhibited or stopped from progressing beyond the rope due to the extra strength and reinforcement applied to the web by the rope. One rope is typically not enough to prevent tears of significant distance that detrimentally comprise the strength of the web.

Another advantage of a stretch wrap apparatus having a plurality of ropes that fully overlap the web when applied to a palletized load is the ability for user to cut a portion of the wrap off a palletized load without the remaining wrap becoming unraveled or significantly loosened. For example, a user may wish to remove only a top half of a wrapped palletized load and leave the bottom half of the load still wrapped. If a palletized load is wrapped with a stretch wrap apparatus having a plurality of ropes that fully overlap the web, then a user may cut the wrap at the level he/she desires and remove the wrap above the cut. The wrap below the cut remains wrapped around the load due to the plurality of ropes and maintains the strength of the wrap sufficient to hold the load. Thus, the ropes reinforce and help hold the initial tension around the wrapped load. If a user made a similar cut or partially unwraps a palletized load after wrapping with a conventional stretch wrap apparatus, the wrapping below the cut would unravel because the cut or tears would run uninhibited by any ropes, and the opposing sides around where the wrap is cut would unravel. Moreover, the remaining wrap will likely be significantly loosened because of the relatively low tension applied to original palletized load, thus providing very minimal containment for the remaining products on the pallet.

Another advantage of a stretch wrap apparatus having a plurality of ropes that fully overlap the web when applied to a palletized load is the ability for a user to "triangulate" at sharp angles to help pull the products on a palletized load together as a single unitized load. This triangulation inhibits sway and movement of the load. In contrast, if a user attempts to triangulate with a conventional stretch wrap apparatus with the same amount or number of wraps and the same gauge of film as particular embodiments of this disclosure, the conventional stretch wrap apparatus results in a reduced load-holding strength when compared to the particular embodiments.

Another advantage of a stretch wrap apparatus having a plurality of ropes that fully overlap the web when applied to a palletized load is a reduction in the amount of wrap applied to a palletized load in comparison to conventional stretch wrap machines. By utilizing a plurality of ropes that fully overlap a web, a palletized load may be wrapped with a relatively high degree of tension that results in a relatively high load-holding force that uses less film than conventional stretch wrap machines, requires less time than conventional stretch wrap machines, and fewer machines hours than conventional stretch wrap machines.

By way of contrast, in a conventional stretch wrap machine the user typically cannot apply much tension to gain a significant load-holding force because the conventional wrap becomes more vulnerable to tears and punctures. These tears and punctures easily proliferate without a plurality of ropes, as described above. To compensate for the effect of wrap having a lower overall tension, the user typically applies more total wraps and film around the palletized load. These results in an increased amount of time required wrapping the palletized load, which may create a bottleneck in the production lines. This also results in more stretch wrap machine hours, which may lead to more wear and tear on the stretch wrap machine.

Another similar advantage of a stretch wrap machine or apparatus having a plurality of ropes that fully overlap the web when applied to a palletized load is a reduced overall cost in wrapping material. Use of a stretch wrap apparatus having a plurality of ropes that fully overlap the web reduces overall costs in areas such as but not limited to total film required to

securely wrap a load, product wear and tear, time, and product change-over. Also, lighter rolls of wrap may be used in certain embodiments.

FIGS. **10***b* and **10***c* depict additional non-limiting embodiments of stretch wrap machines or apparatus having a plurality of ropes that fully overlap the web when applying to and securing a palletized load. These and other embodiments of a stretch wrap machine having a plurality of ropes that fully overlap the web when applied to a palletized load may include all of the advantages described above when compared to conventional wrapping machines. Additionally, unless otherwise specified, embodiments of the stretch wrap machines in FIGS. **10***b* and **10***c* may comprise any of the parts described elsewhere in this documents, such as but not limited to primary or first spools **452**, a primary roll **422** of stretch film, a web **440** of stretch film from the primary roll **422** of stretch film, a pre-stretch carriage **420**, guides and rollers **425**, rollers **430**, guide support **461**, and carriage support **410**. Furthermore, the principles and features discussed in relation to FIGS. **10***b* and **10***c* may be included in any of the other embodiments shown and/or described herein.

FIG. **10***b* depicts a non-limiting embodiment of a stretch wrap machine **800** for securing a palletized load. According to some aspects a stretch wrap machine **800** is configured to wrap a web **440** and a three ropes **810** around a palletized load **495**. In such embodiments, the stretch wrap machine **800** comprises a primary roll **422** of stretch film supported by a first or primary spool support member. Like other embodiments previously described, the stretch film of the primary roll **422** forms a web **440** around the palletized load as the stretch wrap machine **800** rotates around the palletized load (or the palletized load rotates adjacent the stretch wrap machine **800**). When wrapped around the palletized load **495**, the web **440** comprises a top or first edge **816** and a bottom or second edge **818**.

One or more embodiments of a stretch wrap machine **800** further comprise three secondary rolls **806** of stretch film supported by a secondary spool support member. The three secondary rolls **806** of stretch film may each be positionally coupled to the same secondary spool **804**. Alternatively, the three secondary rolls **806** of stretch film may each be positionally coupled to a different secondary spool, with each of the three different secondary spools being coupled to one another. In either configuration, the three secondary rolls **806** unwind at substantially the same rate due to the positional coupling of the secondary rolls **806** to either the same secondary spool core **804** or different spool cores coupled to one another.

In a stretch wrap machine **800** embodiment comprising three secondary rolls **806** of stretch film, the stretch wrap machine typically comprises three sets of rollers **425** or guides. In particular embodiments using multiple fully overlapped webs, although separate secondary rolls of stretch film may be used, a common roll of stretch film that is then cut into sections after leaving the roll but before entering the separate guides may be used. The three sets of rollers **425** or guides may comprise any of the rollers **425** or guides described elsewhere in this document. According to some aspects, a stretch wrap machine **800** comprises collars **430** configured so that positions of the plurality of rollers **425** may be adjusted on the guide support **461**. In other embodiments, the rollers **425** or guides are fixedly positioned on the guide support **461**. In a non-limiting embodiment like that shown in FIG. **10***b*, the rollers **425** are positioned such that a first and second of the ropes **810** are positioned between a central portion **820** of the web **440** and a different edge of the two opposing edges **816**, **818** of the web **440** and a third rope is positioned approximately central between the two edges **816**, **818** of the web when wrapped around the palletized load **495**. In other embodiments, the rollers **425** may more particularly be positioned such that the first and second ropes **810** are positioned proximate opposing edges **816**, **818** of the web **440** and a third rope is positioned approximately central **820** between the opposing edges **816**, **818** of the web **440** when wrapped around the palletized load **495**.

FIG. **10***c* depicts a non-limiting embodiment of a stretch wrap machine **825** for securing a palletized load. According to some aspects a stretch wrap machine **825** is configured to wrap a web **440** and a four ropes **830** around a palletized load **495**. In such embodiments, the stretch wrap machine **825** comprises a primary roll **422** of stretch film supported by a first or primary spool support member. Like other embodiments previously described, the stretch film of the primary roll **422** forms a web **440** around the palletized load as the stretch wrap machine **825** rotates around the palletized load (or the palletized load rotates adjacent the stretch wrap machine **825**). When wrapped around the palletized load **495**, the web **440** comprises a top or first edge **816** and a bottom or second edge **818**.

One or more embodiments of a stretch wrap machine **825** further comprise four secondary rolls **826** of stretch film supported by a secondary spool support member. The four secondary rolls **826** of stretch film may each be positionally coupled to the same secondary spool **824**. Alternatively, the four secondary rolls **826** of stretch film may each be positionally coupled to a different secondary spool, with each of the four different secondary spools being coupled to one another. In either configuration, the four secondary rolls **826** unwind at substantially the same rate due to the positional coupling of the secondary rolls **826** to either the same secondary spool core **824** or different spool cores coupled to one another.

In a stretch wrap machine **825** embodiment comprising four secondary rolls **826** of stretch film, the stretch wrap machine typically comprises four sets of rollers **425** or guides. The four sets of rollers **425** or guides may comprise any of the rollers **425** or guides described elsewhere in this document. According to some aspects, a stretch wrap machine **825** comprises collars **430** configured so that positions of the plurality of rollers **425** may be adjusted on the guide support **461**. In other embodiments, the rollers **425** or guides are fixedly positioned on the guide support **461**. In a non-limiting embodiment like that shown in FIG. **10***c*, the rollers **425** are positioned such that a first and second of the four ropes **830** are positioned between a central portion **820** of the web **440** and a different edge of the two opposing edges **816**, **818** of the web **440** and a third and fourth of the four ropes are positioned between the first and second ropes of the four ropes **830** when wrapped around the palletized load **495**. In other embodiments, the rollers **425** may more particularly be positioned such that the first and second ropes **830** are positioned proximate opposing edges **816**, **818** of the web **440** and a third and a fourth of the four ropes are positioned between the first and second ropes **830** when wrapped around the palletized load **495**. In either or other configurations, the ropes **830** may be substantially parallel and/or positioned approximately equal distance from the nearest adjacent rope **830**.

In particular implementations, such as that shown in FIG. **10***d*, the stretch film rope **505** from the secondary spool **402** may be fed across the perforating spindle **510** with the web of stretch wrap **440** to perforate it as well. As the stretch wrap **440** is stretched in the pre-stretch carriage **420** and applied to the pallet load **495**, the perforated holes **508** are stretched much larger than their initial diameter forming a netting to

allow air flow to the product being wrapped. It is contemplated that embodiments like that illustrated in FIG. **10***d* where the stretch wrap rope **505** does not become perforated, the rope maintains its full strength, but that other embodiments may perforate the rope/band as well or that in other particular implementations a separate perforating spindle with fewer pins/needles/spikes may be used for the rope to provide some air flow but not weaken the rope too much. Embodiments of the stretch wrap machines **400**, **800**, and **825** may incorporate a perforating spindle **510** similar to that shown in FIG. **10***d* without departing from the scope of this disclosure. In such embodiments, the perforating spindle **510** may be positioned to perforate the primary roll **422** and/or web **440** of stretch film without perforating the secondary rolls and/or ropes of stretch film. In other embodiments, the perforating spindle **510** may be positioned to perforate both the primary roll **422** and the secondary rolls of stretch film as the stretch film is wrapped around the palletized load **495**.

Also contemplated as part of this disclosure is a method of inhibiting tearing of stretch film wrapped around a palletized load **495**. According to some aspects, a method of inhibiting tearing of stretch film wrapped around a palletized load comprises dispensing a primary roll **422** of stretch film supported on a first support member and dispensing, at substantially a same rate, at least two secondary rolls **415**, **416**, **806** or **826** of stretch film supported by a secondary support member. Aspects of a method further comprise narrowing a width of each of the at least two secondary rolls **415**, **416**, **806**, **826** with at least two sets of guides **425** to form at least two ropes **436**, **438**, **810**, or **830** and positioning, with the at least two sets of guides **425**, the at least two bands **436**, **438**, **810**, or **830** to fully overlap the primary roll **422**. Embodiments of a method may further comprise simultaneously applying the primary roll **422** and the at least two ropes **436**, **438**, **810**, or **830** to a palletized load such that the at least two ropes **436**, **438**, **810**, or **830** fully overlap a web **440** formed by the application of the primary roll around the palletized load.

Aspects of a method of inhibiting tearing of stretch film wrapped around a palletized load may further comprise positioning, with the sets of guides **425**, the at least two ropes **436**, **438**, **810**, or **830** at strategically desired positions. The strategically desired positions may be as described elsewhere in this documents, such as but not limited to proximate edges **816**, **818** of the web **440**, central **820** to the web **440**, equal distance from one another, and/or any combination thereof.

It is also contemplated that in one or more embodiments, the secondary roll of stretch film is colored differently than the primary roll of stretch film. For example, in the non-limiting embodiments of FIGS. **10***b* and **10***c*, the secondary rolls **806**, **826**, respectively, are colored differently than the primary roll **422** of stretch film. It is also contemplated that the secondary rolls **415**, **416** of FIGS. **10***a* and **10***d* may be colored differently than the primary roll **422** of stretch film. In such embodiments, the stretch wrap machine is also a tamper deterring apparatus for securing a palletized load.

In conventional stretch wrap machines, any stretch wrap used to wrap a palletized load is typically all the same color, such as but not limited to transparent stretch wrap. When a palletized load is wrapped with conventional stretch wrap machines, unauthorized individuals may easily cut the stretch wrap, access and remove some of the palletized load, and then wrap new stretch wrap around the palletized load to seal the cut stretch wrap. Once the new stretch wrap is applied to the load, the cut is no longer visible.

Embodiments comprising secondary rolls **806** or **826** that are colored differently than a primary roll **422** are advantageous to convention stretch wrap machines because the colored ropes **810** or **830** act as a deterrent to tampering with the palletized load **495** after the web **440** and colored ropes **810** or **830** are applied to the palletized load **495**. For example, because the ropes **810** or **830** are colored differently than the web **440**, if an unauthorized individual cuts through the web **440** and ropes **810** or **830**, the cut cannot be concealed because the colored ropes **810** or **830** would be misaligned or covered in new wrap if the unauthorized individual tried to cover the cut with new stretch wrap. Thus, having secondary rolls **806** or **826** that are colored differently than the primary roll **422** deters tampering with a palletized load **495** after wrapping. Similarly, such a configuration of ropes **810** or **830** colored differently than the web **440** may also help detect shipping damage before unwrapping of the palletized load **495**.

A pre-stretch carriage **420** may comprise any combination of rollers and components to pre-stretch the film being passed through it prior to applying the film to the pallet load **495** being wrapped. In the particular implementation illustrated by the rollers in FIGS. **11***a* and **11***b*, the pre-stretch carriage **420** comprises pre-stretch rollers **472** and **474** and idle roller **482**. FIG. **11***a* represents the path of the various stretch films **440** and **505** as they pass from the spools **402**, **452** through the pre-stretch carriage **420** on their way to the pallet load **495** FIG. **10***a*) to be wrapped. FIG. **11***b* represents the various components without the particular housing or the film shown for clarity. Adjacent to pre-stretch carriage **420** are idle rollers **480** and **484**. It should be understood that idle rollers **480** and **484** may also be located within pre-stretch carriage **420** with no change in functionality and that other particular configurations may alternatively be used. Pre-stretch rollers **472** and **474** may be of different diameters, causing the stretch film to become stretched as it passes through pre-stretch carriage **420**.

FIG. **11***a* shows a top view of pre-stretch carriage **420** to illustrate the path taken by one or more stretch wrap ropes **505** and stretch wrap web **440** as they simultaneously traverse through pre-stretch carriage **420**. In this particular implementation, only one stretch wrap rope **505** is illustrated, though as with other embodiments shown and described herein, multiple stretch wrap ropes may be used. Stretch wrap web **440** passes over the perforating spindle **510**, where it is perforated as described above. Thereafter, the combination of the one or more stretch wrap ropes **505** and the stretch wrap web **440** wind past idle roller **480**, pre-stretch roller **472**, idle roller **482**, pre-stretch roller **474**, and idle roller **484**. Pre-stretch rollers **472** and **474** may be of different diameters. Thus, as the one or more stretch wrap ropes **505** and the stretch wrap web **440** pass through the rollers, the different diameters of pre-stretch rollers **472** and **474** cause the ropes **505** and web **440** to stretch simultaneously. It should be understood that other configurations of pre-stretch carriage **420** may be used in conjunction with stretch wrap machines **400**, **502**.

The stretch wrap system **400**, **502** may comprise a common support (not shown) for the carriage support **410** and a rotatable platform **444** on which may be placed a pallet **490** with a load **495** of palletized goods. The arrangement of the load **495** is not critical to this disclosure and has been shown as a non-descript cube for simplicity.

In operation, and with reference to the respective portions of both FIGS. **10***a*-**10***d*, the pallet **490** and the palletized load **495** may arrive at the stretch wrap machine **400**, **502** and may be placed onto the rotatable platform **444**. One or more stretch wrap ropes **436**, **438** and **505** may be formed as described herein in addition to the stretch wrap web. As illustrated in FIG. **11***a*, a portion of the path of the stretch wrap ropes **436**, **438** and **505** from the second spool **402** to the palletized load

495 overlaps with a portion of the path of stretch wrap web 440 from the first spool 452 to the palletized load 495 after the one or more stretch wrap ropes 436, 438 and 505 pass through guides 425 so that the one or more ropes and the stretch wrap web 440 are applied to the palletized load 495 simultaneously. In one embodiment, a pre-stretch carriage 420 is along the overlapping path such that the paths overlap through pre-stretch carriage 420. Then the ropes and web 440 combination are attached at initial ends (not illustrated) to the palletized load 495 in a known manner. The rotatable platform 444 then may be rotated (using, for example, a known type of motor and shaft arrangement as is conventional with this type of stretch wrapping system), thereby pulling stretch film through the guides and extending the at least one rope 436, 438 and 505 and the stretch wrap web 440 to wrap the palletized goods 495 as already described. The carriage 420 is moved up and down on the carriage support 410 as the pallet turns to wrap the pallet, overlapping combinations of previously simultaneously applied rope and web layers. It should be understood that the use of pre-stretch carriage 420 is optional as is the perforating spindle 510. The combination of one or more ropes 436, 438 and 505 with stretch wrap web 440 may be performed without pre-stretching.

It will be understood that implementations are not limited to the specific components disclosed herein, as virtually any components consistent with the intended operation of a method and/or system implementation for securing palletized loads may be utilized. Accordingly, for example, although particular components may be disclosed, such components may comprise any shape, size, style, type, model, version, class, grade, gauge, measurement, concentration, material, weight, quantity, and/or the like consistent with the intended operation of a method and/or system implementation for a palletized load wrapping machine may be used. By specific example, another method and apparatus for wrapping a palletized load known in the art involves a palletized load remaining stationary and the wrapping carriage moving up and down and around the palletized load. It is specifically contemplated that the wrapping carriages of these methods and apparatus would be readily modified by those of ordinary skill in the art to include the advantages of the wrapping carriages and machines identified in this disclosure. Accordingly, it is considered within the scope of this disclosure to include such methods and apparatus adapted to include the carriages and methods described within this disclosure relating to rotating palletized loads.

In places where the description above refers to particular implementations of palletized load-wrapping apparatus, it should be readily apparent that a number of modifications may be made without departing from the spirit thereof and that these implementations may be applied to other forms of devices that secure palletized loads. In particular, the above description describes hand-held and stationary versions of palletized load-wrapping machines. The accompanying claims are intended to cover such modifications as would fall within the true spirit and scope of the disclosure set forth in this document. The presently disclosed implementations are, therefore, to be considered in all respects as illustrative and not restrictive, the scope of the disclosure being indicated by the appended claims rather than the foregoing description. All changes that come within the meaning of and range of equivalency of the claims are intended to be embraced therein.

It is claimed:

1. A method of inhibiting tearing of stretch film wrapped around a palletized load, comprising:

dispensing a primary roll of stretch film supported on a first support member;

dispensing at least one secondary roll of stretch film supported on a second support member;

forming at least two ropes from the stretch film supported on the second support member by narrowing the stretch film dispensed from the at least one secondary roll with at least two sets of guides for each rope;

positioning, with the at least two sets of guides, the at least two ropes to fully overlap the stretch film dispensed from the primary roll;

simultaneously feeding the primary roll of stretch film and the at least two ropes dispensed from the at least one secondary roll of stretch film through a single pre-stretch carriage; and

simultaneously applying the primary roll and the at least two ropes to a palletized load such that the at least two ropes fully overlap a web formed by the application of the primary roll around the palletized load.

2. The method of claim 1, further comprising cutting the at least one secondary roll of stretch film into sections after leaving the at least one secondary roll and before entering the at east two sets of guides.

3. The method of claim 2, wherein positioning, with the at least two sets of guides, the at least two ropes to fully overlap the primary roll comprises:

positioning, with a first set of guides of the at least two sets of guides, a first rope of the least two ropes between a central portion of the web and a first edge of the primary roll; and

positioning, with a second set of guides of the at least two sets of guides, a second rope of the least two ropes between the central portion and a second edge of the primary roll.

4. The method of claim 3, wherein the at least two sets of guides comprises at least three sets of guides and the at least two ropes comprises at least three ropes, the method further comprising positioning, with a third set of guides of the at least three sets of guides, a third rope of the at least three ropes approximately central between the first edge and the second edge of the primary roll.

5. The method of claim 1, wherein dispensing the at least one secondary roll of stretch film comprises dispensing the at least one secondary roll of stretch film colored different than the primary roll of stretch film and supported by the second support member.

6. The method of claim 1, wherein simultaneously applying the primary roll and the at least two ropes to the palletized load comprises circumnavigating the palletized load with the fully overlapped web resulting in multiple layers of overlapped primary roll and at least one secondary roll of stretch film overlapped upon each other.

7. The method of claim 1, wherein dispensing the at least one secondary roll of stretch film supported on the second support member comprises dispensing at least two secondary rolls of stretch film supported on the second support member.

8. A method of securing a palletized load, comprising:

dispensing a first stretch film from a first roll of stretch film supported on a first support member;

dispensing a second stretch film from at least a second roll of stretch film supported on a second support member;

forming at least two ropes of stretch film from the at least a second roll with at least two sets of guides;

overlapping at least two portions of the first stretch film with the at least two ropes of stretch film;

simultaneously feeding the first stretch film and the at least two ropes of stretch film dispensed from the second stretch film through a pre-stretch carriage; and

simultaneously applying the overlapped first stretch film and two ropes of second stretch film from the pre-stretch carriage to the palletized load to be secured after they have been overlapped.

9. The method of claim **8**, wherein simultaneously applying the overlapped first stretch film and the at least two ropes of stretch film comprises circumnavigating the palletized load with the overlapped first stretch film and the at least two ropes of stretch film resulting in multiple avers of overlapped first stretch film and at least two ropes of stretch film overlapped upon each other.

10. The method of claim **8**, wherein forming the at least two ropes of stretch film with the at least two guides comprises forming at least two ropes of stretch film with at least two guides that narrow at least two second stretch films.

11. The method of claim **10**, further comprising dispensing the at least two second stretch films from one or more second rolls of stretch film supported on a second support member.

12. The method of claim **11**, further comprising simultaneously pre-stretching the dispensed first stretch film and the one or more second rolls of stretch film while overlapped prior to applying the first stretch film and the at least two ropes of stretch film to the load.

13. The method of claim **12**, wherein simultaneously pre-stretching the dispensed first stretch film and the one or more second stretch films while overlapped comprises simultaneously pre-stretching the dispensed first stretch film and the one or more second stretch films while overlapped with two pre-stretch rollers and an idle roller positioned between the two pre-stretch rollers in a pre-stretch carriage.

14. An apparatus for securing a palletized load, the apparatus comprising:

a first roll of stretch film supported by a first spool support member; and

at least a second roll of stretch film supported by a second spool support member;

at least two sets of guides configured to form least two ropes of stretch film from the at least a second roll of stretch film, the at least two sets of guides positioned such that the at least two ropes of stretch film overlap at least two portions of the first stretch film as the at least two ropes are wrapped around a palletized load; and

a pre-stretch carriage positioned to simultaneously stretch the first roll of stretch film and the at least two ropes of stretch film formed from the second roll of stretch film.

15. The apparatus of claim **14**, wherein:

a first set of the at least two sets of guides is positioned to position a first rope of the at least two ropes between a central portion of the web and a first edge of a web formed from the first roll of stretch film as the first roll stretch film and the at least two ropes of stretch film are wrapped around the palletized load; and

a second set of the at least two sets of guides is positioned to position a second rope of the at least two ropes between the central portion of the web and a second edge of the web as the first roll of stretch film and the at least two ropes of stretch film are wrapped around the palletized load.

16. The apparatus of claim **15**, wherein the at least two sets of guides comprises at least three sets of guides positioned and configured to form at least three ropes of stretch film, and wherein a third set of the at least three sets of guides is positioned between the first and second sets of guides to position a third rope of stretch film of the at least ropes of stretch film approximately central between the first and second edges of the web as the first roll of stretch film and the at least three ropes of stretch film are wrapped around the palletized load.

17. The apparatus of claim **14**, wherein the at least two ropes of stretch film are colored differently than the first roll of stretch film.

18. The apparatus of claim **14**, wherein the second roll of stretch film is cut into sections before entering the at least two sets of guides.

19. The apparatus of claim **14**, wherein the at least two ropes of stretch film are each formed from a different roll of the at least two rolls of stretch film supported by the second spool support member.

20. The apparatus of claim **19**, further comprising a pre-stretch carriage configured to simultaneously stretch the overlapping first roll of stretch film and the at least two ropes of stretch film prior to the stretch films being simultaneously applied to the palletized load.

* * * * *

UNITED STATES PATENT AND TRADEMARK OFFICE

CERTIFICATE OF CORRECTION

PATENT NO. : 9,254,931 B2
APPLICATION NO. : 14/667454
DATED : February 9, 2016
INVENTOR(S) : Darrel Bison

It is certified that error appears in the above-identified patent and that said Letters Patent is hereby corrected as shown below:

In the Claims

Column 22, lines 19-22, Claim 2 should read:

2. The method of claim 1, further comprising cutting the at least one secondary roll of stretch film into sections after leaving the at least one secondary roll and before entering the at least two sets of guides.

Column 23, lines 5-11, Claim 9 should read:

9. The method of claim 8, wherein simultaneously applying the overlapped first stretch film and the at least two ropes of stretch film comprises circumnavigating the palletized load with the overlapped first stretch film and the at least two ropes of stretch film resulting in multiple layers of overlapped first stretch film and at least two ropes of stretch film overlapped upon each other.

Signed and Sealed this
Nineteenth Day of July, 2016

Michelle K. Lee

Michelle K. Lee
Director of the United States Patent and Trademark Office