US009302631B2

(12) **United States Patent**
Lee

(10) **Patent No.: US 9,302,631 B2**
(45) **Date of Patent: Apr. 5, 2016**

(54) **METHOD FOR RETAINING AUTOMOTIVE TRIM PANEL TO INNER PANEL**

(71) Applicant: **Ford Global Technologies, LLC**, Dearborn, MI (US)

(72) Inventor: **Yun Shin Lee**, Shelby Township, MI (US)

(73) Assignee: **Ford Global Technologies, LLC**, Dearborn, MI (US)

(*) Notice: Subject to any disclaimer, the term of this patent is extended or adjusted under 35 U.S.C. 154(b) by 132 days.

(21) Appl. No.: **14/186,565**

(22) Filed: **Feb. 21, 2014**

(65) **Prior Publication Data**

US 2014/0165362 A1 Jun. 19, 2014

Related U.S. Application Data

(62) Division of application No. 13/071,000, filed on Mar. 24, 2011, now Pat. No. 8,677,573.

(51) **Int. Cl.**

B60R 13/02	(2006.01)
F16B 21/07	(2006.01)
F16B 21/08	(2006.01)
B21D 53/88	(2006.01)
F16B 5/06	(2006.01)

(52) **U.S. Cl.**

CPC ***B60R 13/02*** (2013.01); ***B60R 13/0206*** (2013.01); ***F16B 21/076*** (2013.01); ***F16B 21/086*** (2013.01); *B21D 53/88* (2013.01); *F16B 5/065* (2013.01); *Y10T 24/30* (2015.01); *Y10T 24/309* (2015.01); *Y10T 24/44026* (2015.01); *Y10T 24/45204* (2015.01); *Y10T 29/49826* (2015.01); *Y10T 29/49947* (2015.01)

(58) **Field of Classification Search**

CPC .. B21D 53/88; B21D 53/36; Y10T 29/49876; Y10T 29/49948; Y10T 24/44026; Y10T 24/309; B60R 13/0206; F16B 21/076

See application file for complete search history.

(56) **References Cited**

U.S. PATENT DOCUMENTS

4,176,428	A	12/1979	Kimura
4,405,272	A	9/1983	Wollar

(Continued)

FOREIGN PATENT DOCUMENTS

WO	WO 2007013283 A1 *	2/2007	..... B60R 13/0206
WO	2010016982	2/2010	

OTHER PUBLICATIONS

Jetpress, Removable U-Type Cable Clips, http://wwwjetpress.com/Products.aspx/14249/CableAndPipeClips/UType, Sep. 28, 2010, 2 pages.

Primary Examiner — Jermie Cozart

(74) *Attorney, Agent, or Firm* — Vichit Chea; Price Heneveld LLP

(57) **ABSTRACT**

A serviceable safety clip for retaining an automotive trim panel to an inner panel. The serviceable safety clip includes a pin secured to the trim panel, wherein the pin includes a plurality of blades that each include a low retention detent and a high retention detent. The serviceable safety clip also includes a receiver that is secured to the inner panel, wherein the receiver includes an angled face to facilitate insertion of the pin detents and a holding face that retains the pin detents. Insertion of the blades into the receiver includes pushing the pin to flex the blades inward and thereby move the high retention detent beyond the holding face and pushing the pin further to again flex the blades inward and to move the low retention detent into engagement with the holding face.

18 Claims, 4 Drawing Sheets

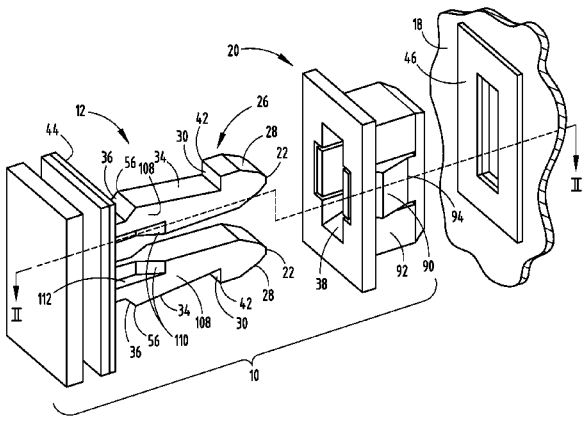

(56) **References Cited**

U.S. PATENT DOCUMENTS

4,648,766	A	3/1987	Wollar
4,861,208	A	8/1989	Boundy
5,507,610	A	4/1996	Benedetti et al.
5,775,860	A	7/1998	Meyer
6,003,928	A	12/1999	Curtindale
6,196,607	B1	3/2001	Gulisano
6,196,756	B1	3/2001	Leverger
6,264,393	B1	7/2001	Kraus
6,594,870	B1	7/2003	Lambrecht et al.
6,612,795	B2	9/2003	Kirchen
6,769,849	B2	8/2004	Yoneoka
6,874,983	B2	4/2005	Moerke
7,178,855	B2	2/2007	Catron et al.
7,198,315	B2	4/2007	Cass et al.
7,351,023	B2	4/2008	Scroggie et al.
7,549,199	B2	6/2009	Bügner
7,559,599	B2	7/2009	Kaplanov
7,614,836	B2	11/2009	Mohiuddin et al.
7,677,850	B2	3/2010	Sano
7,690,876	B2	4/2010	Kawai et al.
2002/0021950	A1	2/2002	Ichikawa
2003/0190965	A1	10/2003	Kirchen et al.
2004/0074056	A1	4/2004	Götzinger
2005/0023686	A1	2/2005	Lin
2005/0236861	A1	10/2005	Slobodecki et al.
2006/0032031	A1*	2/2006	Banno F16B 21/088 24/292
2006/0197356	A1	9/2006	Catron et al.
2008/0014045	A1	1/2008	Kawai
2008/0023686	A1	1/2008	Noh et al.
2008/0028577	A1	2/2008	Soman et al.
2008/0066266	A1	3/2008	Scroggie et al.
2010/0072735	A1	3/2010	Kirchen et al.

* cited by examiner

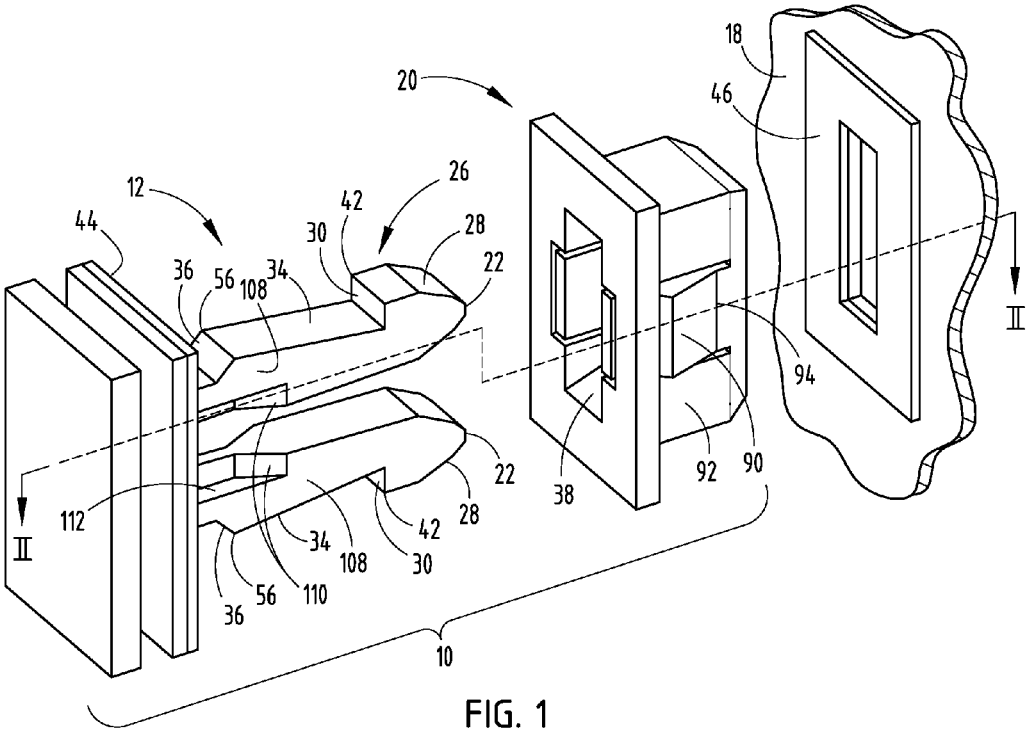
18
46
20
26
12
42
44
30
28
36
56
108
34
22
II
94
22
112
38
92
90
28
II
34
42
108
30
36
56
110
10

FIG. 1

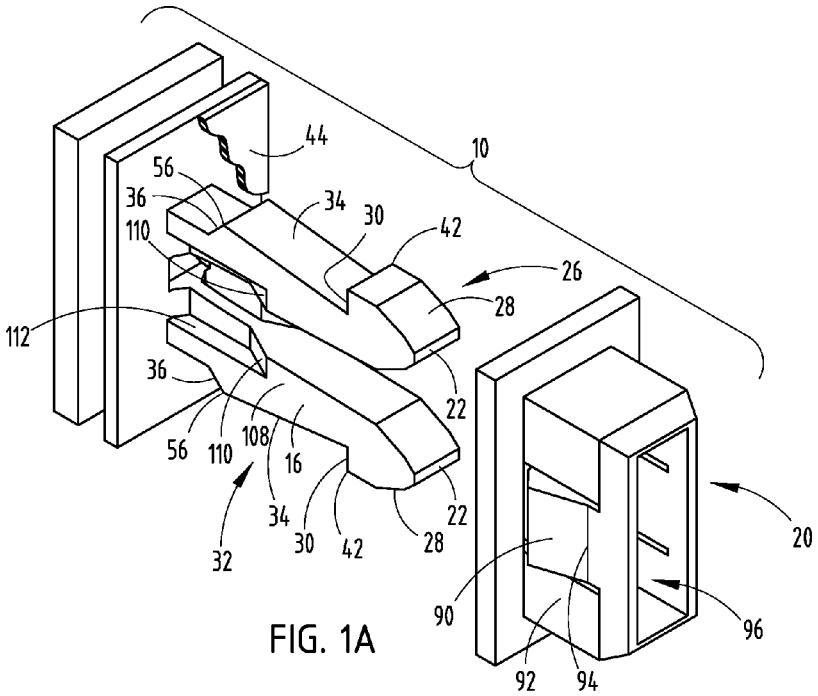
44
10
56
36
34
30
42
110
26
28
112
36
22
56
110
108
16
22
34
30
42
28
32
20
90
96
92
94

FIG. 1A

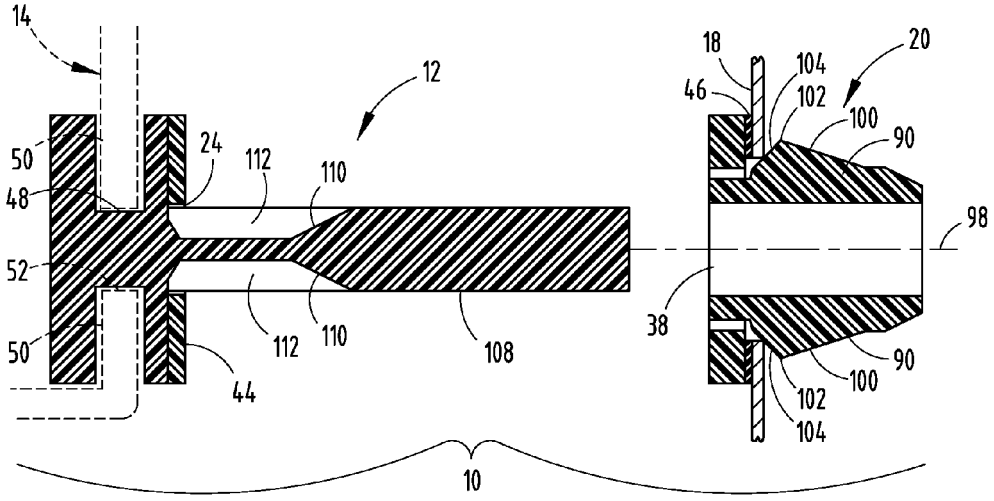
14
12
18
20
104
46
102
100
90
50
24
112
110
48
98
52
38
50
112
110
108
90
100
44
102
104
10

FIG. 2

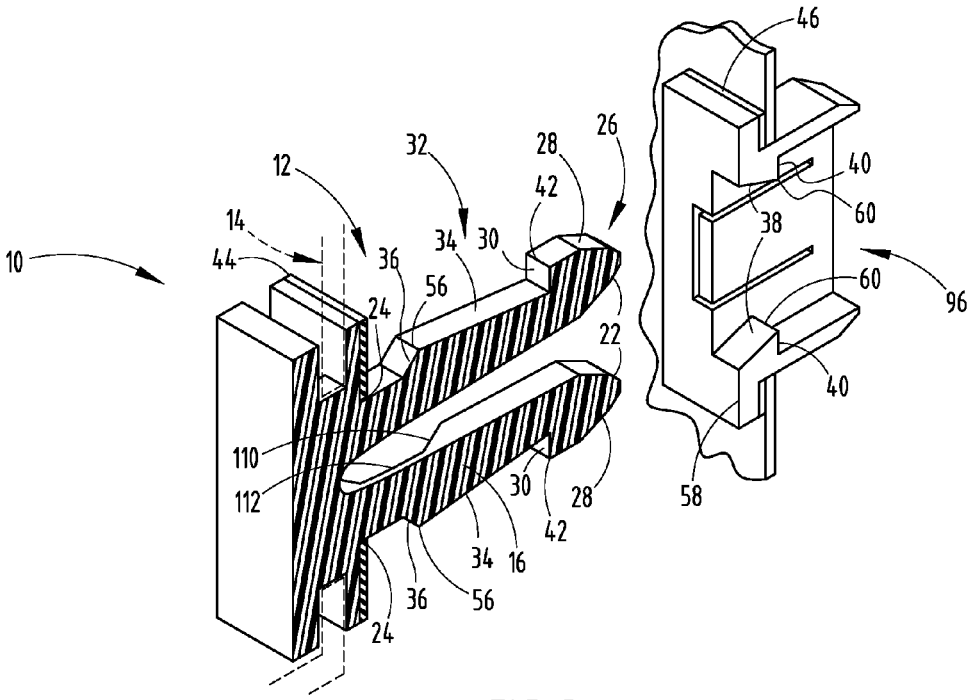
46
26
32
28
40
12
42
60
14
38
34
30
10
44
36
56
60
96
24
22
40
110
30
28
58
112
42
34
16
36
56
24

FIG. 3

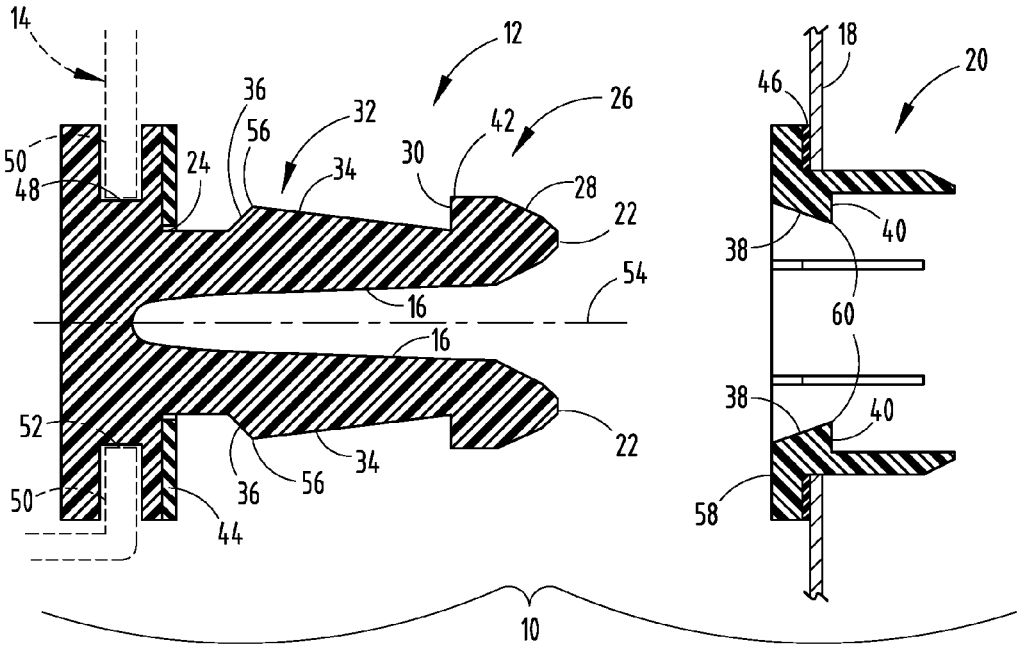
14
12
18
20
36
56
32
42
26
46
50
48
24
34
30
28
22
38
40
54
16
60
16
38
40
52
22
34
36
56
50
44
58
10

FIG. 4

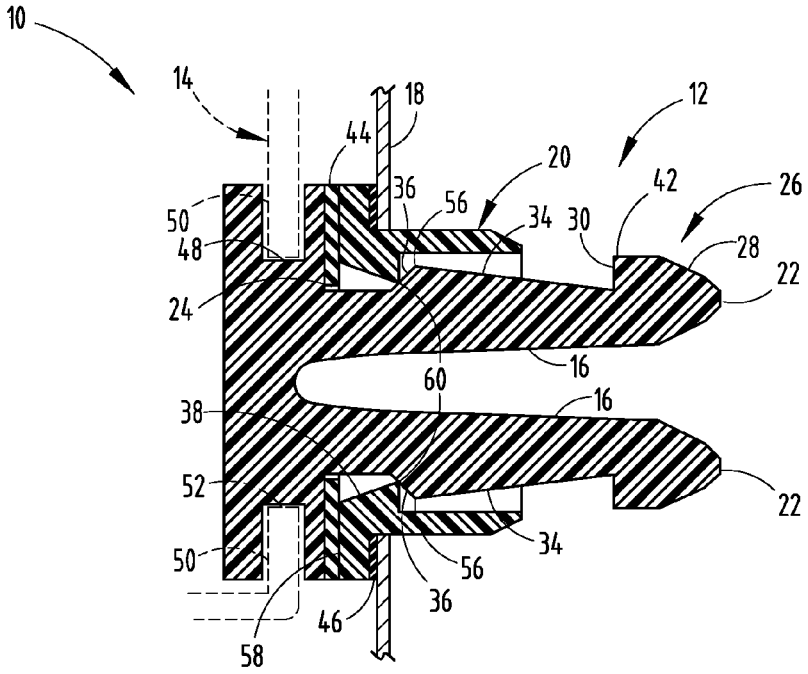
10
14
18
12
44
20
36
56
42
26
50
34
30
48
28
22
24
16
60
38
16
52
22
34
50
56
36
46
58

FIG. 5

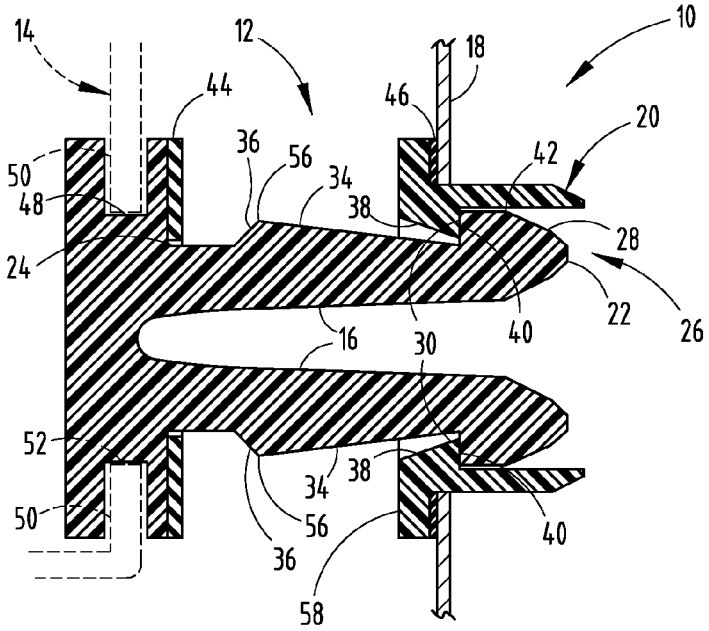
14
12
10
18
44
46
20
36
56
42
50
34
48
38
28
24
22
26
16
30
40
52
38
34
50
56
40
36
58

FIG. 6

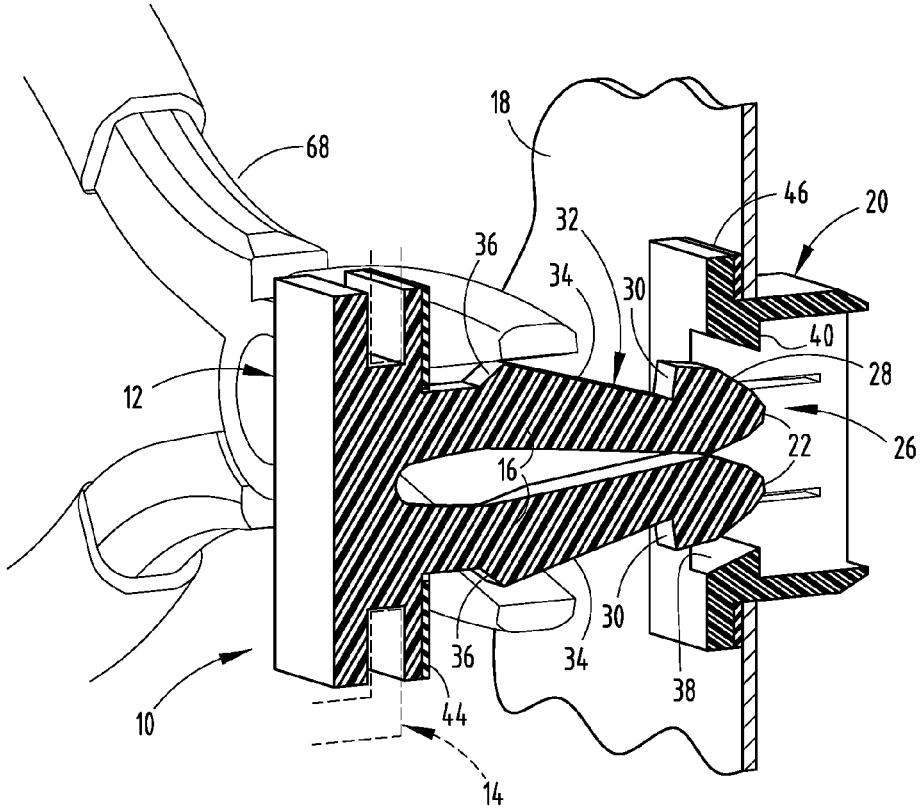
18
68
46
20
32
36
34
30
40
28
12
22
26
16
30
36
34
38
10
44
14

FIG. 7

METHOD FOR RETAINING AUTOMOTIVE TRIM PANEL TO INNER PANEL

CROSS-REFERENCE TO RELATED APPLICATION

This application is a divisional of U.S. patent application Ser. No. 13/071,000, filed on Mar. 24, 2011, now U.S. Pat. No. 8,677,573, entitled "TWO STAGE SERVICEABLE SAFETY CLIP." The aforementioned related application is hereby incorporated by reference.

FIELD OF THE INVENTION

The present invention generally relates to a trim panel attachment assembly, and more particularly relates to a two stage safety clip and a corresponding method of assembly.

BACKGROUND OF THE INVENTION

Automotive vehicles typically include decorative trim panel pieces secured to inner panels in a variety of ways. Such trim panels must meet installation and removal standards for service, while also meeting standards pertaining to retention in the event of an impact. Often, screws or other mechanical fasteners are employed to secure the trim panel to the inner panel, however, visible screws or fasteners are not desirable from an aesthetics standpoint. Other trim panels are secured to the inner panel by hidden fasteners, however, these do not ensure retention forces sufficient to completely retain the trim panel in the event of an impact.

Accordingly, an apparatus and method are desired having the aforementioned advantages and solving and/or making improvements on the aforementioned disadvantages.

SUMMARY OF THE INVENTION

According to one aspect of the present invention, a method for retaining an automotive trim panel to an inner panel includes providing a pin having a head secured to the trim panel and a plurality of blades extending from the head that includes a high retention detent and a low retention detent. The method further includes providing a receiver secured to the inner panel that includes a holding face. The method also includes inserting the blades into the receiver to flex the blades inward and to position the high retention detent beyond the holding face. Further, the method includes pushing the pin further into the receiver to flex the blades inward and to position the low retention detent beyond the holding face.

According to another aspect of the present invention, a method for retaining an automotive trim piece to a structure includes providing a pin secured to the trim piece that has blades on opposing side of a gap, each including high and low retention detents. The method also includes providing a receiver secured to the structure that includes a holding face. Further, the method includes inserting the blades into the receiver to flex the blades into the gap and position the high and low retention detents sequentially beyond the holding face.

According to yet another aspect of the present invention, a method for retaining an automotive trim piece to a structure includes providing a pin having a head secured to the trim piece and a plurality of blades extending from the head that includes high and low retention detents. The method also includes providing a receiver secured to the structure that includes an opening with a holding face on a perimeter thereof. Further, the method provides inserting the high and low retention detents into the opening and sequentially beyond the holding face.

These and other aspects, objects, and features of the present invention will be understood and appreciated by those skilled in the art upon studying the following specification, claims, and appended drawings.

BRIEF DESCRIPTION OF DRAWINGS

In the drawings:

FIG. **1** is a top, left perspective view of a serviceable safety clip for retaining an automotive trim panel to an inner panel;

FIG. **1**A is a top, right perspective view of the serviceable safety clip for retaining the automotive trim panel to the inner panel;

FIG. **2** is a top, cross-sectional view of the serviceable safety clip taken along line **2-2** of FIG. **1**;

FIG. **3** is a perspective, cross-sectional view of the serviceable safety clip;

FIG. **4** is a front, cross-sectional view of the serviceable safety clip;

FIG. **5** is a front, cross-sectional view of the serviceable safety clip fully inserted into an aperture of an inner panel;

FIG. **6** is a front, cross-sectional view of the serviceable safety clip partially inserted into the inner panel; and

FIG. **7** is a perspective, cross-sectional view of the serviceable safety clip being removed from the inner panel.

DETAILED DESCRIPTION OF PREFERRED EMBODIMENTS

As required, detailed embodiments of the present invention are disclosed herein; however, it is to be understood that the disclosed embodiments are merely exemplary of the invention that may be embodied in various and alternative forms. The figures are not necessarily to a detailed design; some schematics may be exaggerated or minimized to show function overview. Therefore, specific structural and functional details disclosed herein are not to be interpreted as limiting, but merely as a representative basis for teaching one skilled in the art to variously employ the present invention.

The reference numeral **10** (FIGS. **1-7**) generally designates a two stage serviceable safety clip for retaining an automotive trim panel **14** to an inner panel **18**, such as an automotive door panel. In the illustrated example, the two stage serviceable safety clip **10** comprises a pin **12** secured to the trim panel **14**, where the pin **12** includes at least one blade **16**. Each blade **16** comprises a first end **22** and a second end **24**. Each blade **16** also comprises a high retention detent **26** that includes a first angled face portion **28** located proximate the first end **22** of the blade **16** and a first dropoff face **30** proximate an end point **42** of the angled face portion **28**. Each blade **16** also comprises a low retention detent **32** that includes a second angled face portion **34** and a second dropoff face **36**, where the low retention detent **32** is located between the first dropoff face **30** and the second end **24** of the blade **16**. The serviceable safety clip **10** also comprises a receiver **20** secured to the inner panel **18**, where the receiver **20** includes an angled face **38** to facilitate insertion of the pin detents **26**, **32** and a holding face **40** that retains the first and second dropoff faces **30**, **36** of the pin detents **26**, **32**.

The illustrated serviceable safety clip assembly **10** may be a molded plastic clip comprising two main parts, specifically the two stage pin **12** and the receiver **20**. The pin **12** includes at least one blade **16**, and typically two blades **16**, that extend substantially parallel to one another in a longitudinal direc-

tion. The pin **12** also includes a base section **48** or a head from which the blades **16** extend in a substantially perpendicular direction. The base section **48** is configured to securely attach to the trim panel piece **14** in any number of ways. In the illustrated examples shown in FIGS. **1-3**, the trim panel piece **14** includes a dog house portion **50** that may be snap-fitted into slots **52** of the molded pin **12**. Alternatively, the secure attachment between the trim panel piece **14** and the pin **12** may be accomplished by employing mechanical fasteners or an adhesive.

The blades **16** of the pin **12** include the first end **22** located at the distal end of the base section **48**. The blades **16** terminate at the second end **24** located adjacent to the base **48**. The high retention detent **26** of each blade **16** is located proximate the first end **22** of each blade **16** and comprises the first angled face portion **28** and the first dropoff face **30**. The first angled face portion **28** begins at the first end **22** and extends either linearly or in a slightly curved manner away from the first end **22** toward the second end **24** of the blade **16**, while also extending outwardly away from an imaginary longitudinal centerline **54**. The first angled face portion **28** terminates at the end point **42**, then transitions into the first dropoff face **30**. The first dropoff face **30** extends from the end point **42** at a steep angle substantially perpendicular to, and toward, the longitudinal centerline **54**.

Additionally, each blade **16** includes a necked region proximate the second end **24**. Tapering inward from a sidewall **108** of the blade **16** is an angled face **110** that forms a channel **112**.

Each blade **16** also includes the low retention detent **32** located at a position between the first dropoff face **30** and the second end **24** of each blade **16**. The low retention detent **32** includes the second angled face portion **34** that extends either linearly or in a slightly curved manner away from the first end **22** and toward the second end **24**, while also extending outwardly from the longitudinal centerline **54**. The second angled face portion **34** may have a similar configuration and/or angle incline as that of the first angled face portion **28**. Alternatively, the second angled face portion **34** may take on a distinct geometric configuration and/or angle of incline as that of the first angled face portion **28**. The second angled face portion **34** terminates at a point **56**, thereby transitioning into the second dropoff face **36**. The second dropoff face **36** extends from point **56** inwardly towards the longitudinal centerline **54** and towards the second end **24** of the blade **16**. The angle of the second dropoff face **36** is not as steep as that of the first dropoff face **30**. Each blade **16** is flexibly biased to maintain an at rest position, that being substantially parallel to the other blades **16**, as well as substantially perpendicular to the base **48** of the pin **12**.

The receiver **20** of the overall clip assembly **10** is installed into a sheet metal hole of the inner panel **18**. The receiver **20** includes at least one, but typically a plurality of flexible fins **90** that are located proximate sidewalls **92** of the receiver **20**. The flexible fins **90** are flexibly hinged at point **94** to the receiver **20**. A corresponding void **96** in the receiver **20** allows the flexible fins **90** to rotate or flex inwardly towards a longitudinal centerline **98** of the receiver **20**. Each flexible fin **90** includes a first angled face **100** that extends from the point **94** where the flexible fin **90** is hingeably attached and terminates at point **102**, while also extending radially outward from the longitudinal centerline **98** of the receiver **20**. At point **102**, the first angled face **100** transitions to a second angled face **104**. The second angled face **104** extends from the point **102** radially inward toward the longitudinal centerline **98** of the receiver **20**. In the illustrated example, both the first and second angled faces **100**,**104** comprise substantially linear paths, however, the first and second angled faces **100**, **104** may comprise a slightly curved geometry. The second angled face **104** terminates proximate seal **46** and it is this small space between the flexible fin **90** and the seal **46** that the inner panel **18** will reside between when the clip assembly **10** is fully inserted into an aperture of the inner panel **18**.

After the clip assembly **10** initially penetrates the inner panel **18**, the flexible fins **90** eventually engage the inner panel **18**. Specifically, the inner panel **18** engages the first angled face **100** of the flexible fin **90**, thereby depressing each fin **90** into the corresponding channel **112** of the pin blade **16** by rotating each fin **90** about hinge point **94**. Further insertion of the clip assembly **10** continues the process of the inner panel **18** gliding along the first angled face **100** of the flexible fin **90** until the flexible fin **90** bypasses the aperture of the inner panel **18**. Full insertion of the clip assembly **10** is reached when the seal **46** engages the receiver **20**, as well as when the flexible fins **90** rotate outwardly away from the longitudinal centerline **98**. The outward flexing of the fins **90** occurs due to a biasing force that is applied approximate hinge point **94**.

In the position where the receiver **20** is fully inserted into the inner panel **18** (FIG. **2**), the inner panel **18** is engaged, or very nearly in contact with, the second angled face **104** of the flexible fin **90**. In this fully inserted position, the trim panel **14** is securely engaged to the inner panel **18** and this constitutes a static position. From this static position, the trim panel **14** may optionally be removed from the inner panel **18** for service or replacement. To accomplish removal, sufficient force must be applied to withdraw the clip assembly **10**, specifically overcoming the hinge force of the flexible fins **90**. Sufficient pulling force will cause the inner panel **18** to slide along the second angled face **104**, thereby depressing each fin **90** into the corresponding channel **112** until the clip assembly **10** may be fully withdrawn.

The receiver **20** includes an exterior face **58** that may be exposed to an exterior region of the inner panel **18**. The receiver **20** also includes an angled face **38** that extends from the exterior face **58** into the interior region of the inner panel **18**, as well as inwardly toward the longitudinal centerline **54**. The angled face **38** terminates at a point **60** and transitions into a holding face **40** that extends outwardly from the longitudinal centerline **54** in a substantially perpendicular direction.

Although the illustrated drawings depict the pin **12** being inserted into the receiver **20** subsequent to insertion of the receiver **20** into the inner panel **18**, it is also conceived that the pin **12** would be inserted into the receiver **20** prior to insertion of the then assembled two stage serviceable safety clip **10** into the inner panel **18**. A single unit installation step such as this would be advantageous to installation operators who are accustomed to installing a single unit.

Full insertion (FIG. **4**) of the pin **12** into the receiver **20** is facilitated by the cooperation of the first angled face and the second angled face portions **28**, **34** with the angled face **38** of the receiver **20**. The angles allow a smooth insertion of the pin **12** into the receiver **20**, thereby bringing the trim panel piece **14** into a position proximate the inner panel **18**. Foam seals **44**, **46** are included on one or both the receiver **20** and the pin **12** to achieve sealing between the relevant components. In the illustrated example, the second dropoff face **36** of the low retention detent **32** provides a resistive force to extraction of the pin **12** from the receiver **20**. The exact angle and configuration of the low retention detent **32** may be optimized to provide various retention forces. The retention force prevents withdrawal of the pin **12** from the receiver **20** to counteract forces that would otherwise dislodge the pin **12** from the receiver **20**. One example of such an external force is an

automobile collision. In the event an external force overcomes the retention force provided by the low retention detent **32**, the high retention detent **26** is provided to ensure that the pin **12** is not completely removed from the receiver **20**. This is successfully accomplished by the steep angle of the first dropoff face **30** and the holding face **40**, as well as each blade **16** being flexibly biased to maintain a position substantially parallel to one another. By negating relatively easy flexure of the blades **16**, the pin **12** cannot be completely withdrawn from the receiver **20** based on the first dropoff face **30** engaging the holding face **40** of the receiver **20**. This position is illustrated in FIG. **5**.

To avoid withdrawal of the receiver **20**, and thereby the trim panel **14**, when undergoing a significant external force such as an automobile collision, the clip assembly **10** is capable of transitioning to an impact position. The impact position is defined by a repositioning of the pin **12** to a position where the pin **12** overcomes the low retention detent **32** and slides to a position where the sidewalls **108** block inward flexing of the fins **90**, thereby preventing the receiver **20** from pulling away from the inner panel **18**. By blocking the ability of the fins **90** to rotate, the overall clip assembly **10** is effectively locked in place, thereby preventing the pin **12** and trim panel **14** from disengaging the inner panel **18**.

In the event the trim panel piece **14** or the inner panel **18** require service, the pin **12**, and thereby the trim panel piece **14**, may be completely withdrawn from the receiver **20** (FIG. **6**). By manually pulling the pin **12** away from the receiver **20**, with sufficient force to overcome the low retention detent **32**, a space between the base **48** of the pin **12** and the inner panel **18** is created. Within this space, either fingers or a tool **68** (FIG. **7**) may be inserted to clamp down with sufficient force to overcome the flexible biasing of the blades **16**. Clamping down with such a force deflects the blades **16** inwardly toward the longitudinal centerline **54**, thereby disengaging the first dropoff face **30** and the holding face **40** which allows the pin **12** to be withdrawn from the receiver **20**.

It addition to having the ability to withdraw the pin **12** from the receiver **20**, the receiver **20** may be withdrawn from the inner panel **18** by simply pulling the receiver **20** away from the inner panel **18** when the fins **90** are not impeded from flexing inward. This is possible when the pin **12** is withdrawn from the receiver **20** or when the pin **12** is in the static position, that being when the channel **112** is lined up to receive inwardly flexing fins **90** during withdrawal of the receiver **20**.

It is to be understood that variations and modifications can be made on the aforementioned structure without departing from the concepts of the present invention, and further it is to be understood that such concepts are intended to be covered by the following claims unless these claims by their language expressly state otherwise.

What is claimed is:

1. A method for retaining an automotive trim panel to an inner panel, comprising:

providing a pin having a head secured to the trim panel and a plurality of blades extending from the head that includes a low retention detent and a high retention detent having a first angled face portion located proximate a distal end of the plurality of blades and a first dropoff face proximate an end point of the first angled face portion;

providing a receiver secured to the inner panel that includes a holding face;

inserting the blades into the receiver to flex the blades inward and to position the high retention detent beyond the holding face; and

pushing the pin further into the receiver to flex the blades inward and to position the low retention detent beyond the holding face.

2. The method of claim **1**, further comprising:

disengaging the low retention detent from the holding face by pulling the trim panel away from the inner panel, and thereby moving the high retention detent into engagement with the holding face, providing a space between the trim panel and the inner panel sufficient to insert a tool into the space.

3. The method of claim **2**, further comprising:

disengaging the high retention detent by inserting the tool into the space and squeezing the plurality of blades together and completely withdrawing the pin from the receiver.

4. The method of claim **1**, wherein the receiver includes an angled face to facilitate flexing the plurality of blades toward each other upon insertion of the pin into the receiver.

5. The method of claim **1**, wherein the plurality of blades are made of a resilient polymer, such that the blades are flexible inward for insertion and removal of the pin from the receiver.

6. The method of claim **1**, wherein the pin includes at least one foam seal on the head proximate the plurality of blades for engaging the receiver.

7. The method of claim **1**, wherein the low retention detent includes a second angled face portion and a second dropoff face, wherein the low retention detent is located between the first dropoff face and the head of the pin.

8. The method of claim **1**, wherein the holding face of the receiver and the first dropoff face of the high retention detent are aligned and substantially parallel to a planar extent of the trim panel proximate the pin.

9. A method for retaining an automotive trim piece to a structure, comprising:

providing a pin secured to the trim piece that has blades on opposing sides of a gap, each including high and low retention detents;

providing a receiver secured to the structure that includes a holding face; and

inserting the blades into the receiver to flex the blades into the gap and position the high and low retention detents sequentially beyond the holding face;

wherein the high retention detent includes a first angled face portion located proximate a distal end of the blades and a first dropoff face proximate an end point of the first angled face portion, and wherein the low retention detent includes a second angled face portion and a second dropoff face, whereby the low retention detent is located between the first dropoff face and the head of the pin.

10. The method of claim **9**, wherein inserting the blades into the receiver includes pushing the pin to flex the blades inward to move the high retention detent beyond the holding face and further pushing the pin to again flex the blades inward and to move the low retention detent beyond the holding face.

11. The method of claim **9**, further comprising:

disengaging the low retention detent from the holding face by pulling the trim piece away from the structure, and thereby moving the high retention detent into engagement with the holding face, which provides a space between the trim piece and the structure sufficient to insert a tool into the space.

12. The method of claim **11**, further comprising:

disengaging the high retention detent by inserting the tool into the space and squeezing the blades together and completely withdrawing the pin from the receiver.

13. The method of claim **9**, wherein the receiver includes an angled face to facilitate flexing the blades toward each other upon insertion of the pin into the receiver.

14. The method of claim **9**, wherein the blades are made of a resiliently flexible polymer, such that the blades are flexible inward for insertion and removal of the pin from the receiver.

15. A method for retaining an automotive trim piece to a structure, comprising:

providing a pin having a head secured to the trim piece and a plurality of blades having a low retention detent and a high retention detent having a first angled face portion located proximate a distal end of the plurality of blades and a first dropoff face proximate an end point of the first angled face portion;

providing a receiver secured to the structure that includes an opening with a holding face; and

inserting the high and low retention detents into the opening to position the high retention detent beyond the holding face.

16. The method of claim **15**, wherein inserting the high and low retention detents into the opening includes pushing the pin to flex the plurality of blades inward and thereby move the high retention detent beyond the holding face, and further includes pushing the pin to again flex the plurality of blades inward and thereby move the low retention detent into engagement with the holding face.

17. The method of claim **15**, further comprising:

disengaging the low retention detent from the holding face by pulling the trim piece away from the structure, and thereby moving the high retention detent into engagement with the holding face, which provides a space between the trim piece and the structure sufficient to insert a tool into the space.

18. The method of claim **17**, further comprising:

disengaging the high retention detent by inserting the tool into the space and squeezing the plurality of blades together and completely withdrawing the pin from the receiver.

* * * * *