US009055829B1

(12) **United States Patent**
Marsh

(10) **Patent No.: US 9,055,829 B1**
(45) **Date of Patent: Jun. 16, 2015**

(54) **SYSTEM AND METHOD FOR INCREASED FILLING OF PLASTIC GUSSETED T-SHIRT BAGS**

(71) Applicant: **Karl Marsh**, Glendale, CA (US)

(72) Inventor: **Karl Marsh**, Glendale, CA (US)

(*) Notice: Subject to any disclaimer, the term of this patent is extended or adjusted under 35 U.S.C. 154(b) by 0 days.

(21) Appl. No.: **14/259,024**

(22) Filed: **Apr. 22, 2014**

Related U.S. Application Data

(63) Continuation-in-part of application No. 13/850,122, filed on Mar. 25, 2013, now Pat. No. 8,882,061, which is a continuation-in-part of application No. 12/882,045, filed on Sep. 14, 2010, now Pat. No. 8,424,816, which is a continuation-in-part of application No. 12/586,201, filed on Sep. 17, 2009, now abandoned.

(60) Provisional application No. 61/164,460, filed on Mar. 29, 2009.

(51) **Int. Cl.**
B65B 67/04 (2006.01)
A47F 13/08 (2006.01)
B65B 5/04 (2006.01)

(52) **U.S. Cl.**
CPC ***A47F 13/085*** (2013.01); ***B65B 5/045*** (2013.01)

(58) **Field of Classification Search**
CPC B65B 67/12; B65B 67/1238; B65B 67/1205; B65B 5/045; B65F 1/1415; A47F 13/085
USPC 248/95, 97, 99, 100, 150, 175; 53/390; 141/314, 390, 391; D34/6
See application file for complete search history.

(56) **References Cited**

U.S. PATENT DOCUMENTS

6,042,063	A *	3/2000	Kerr et al.	248/100
8,424,816	B1 *	4/2013	Marsh	248/100
2014/0138499	A1 *	5/2014	Laitila et al.	248/97
2014/0151515	A1 *	6/2014	Andersen	248/97

* cited by examiner

Primary Examiner — Gwendolyn W Baxter
(74) *Attorney, Agent, or Firm* — Ray L. Anderson; Wagner, Anderson & Bright PC

(57) **ABSTRACT**

A bagging system that permits one or two plastic bags to be filled at the same time, one of which can be filled more fully as it is supported by a three-sided support off from a three-sided bag rack. A cross bar can be used to help create two separate areas in which two plastic bags are filled. The same bagging system can also be used with non-plastic and non-standard bags by placing such bags inside of the system, between the three-sided support and the three-sided bag rack, and securing handles of the bag to the bagging system.

16 Claims, 13 Drawing Sheets

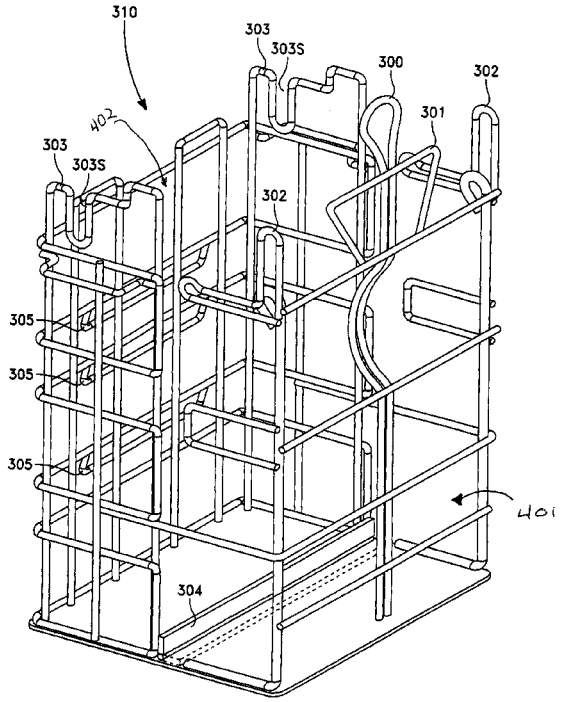

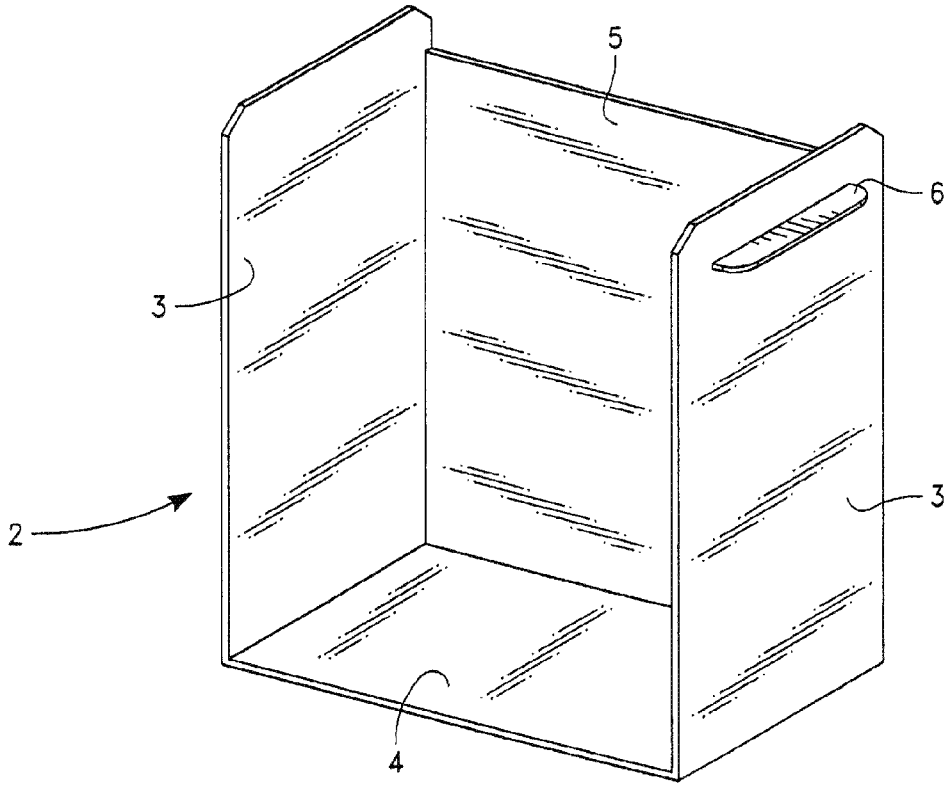

FIG. 1

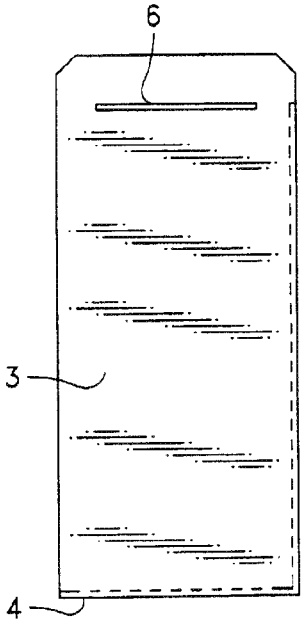

FIG. 2

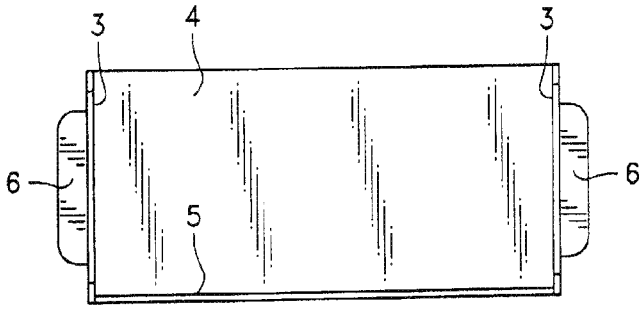

FIG. 3

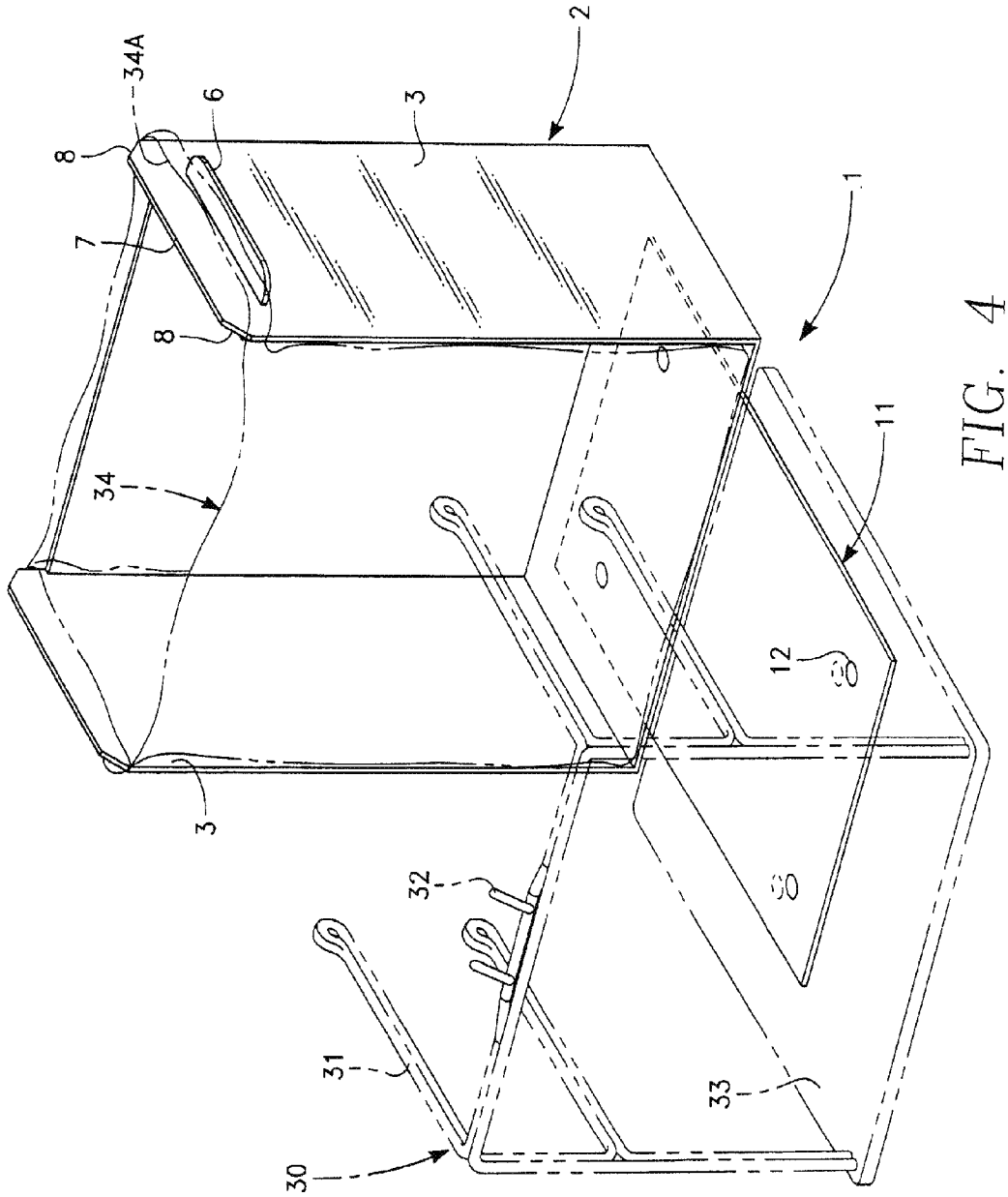

FIG. 4

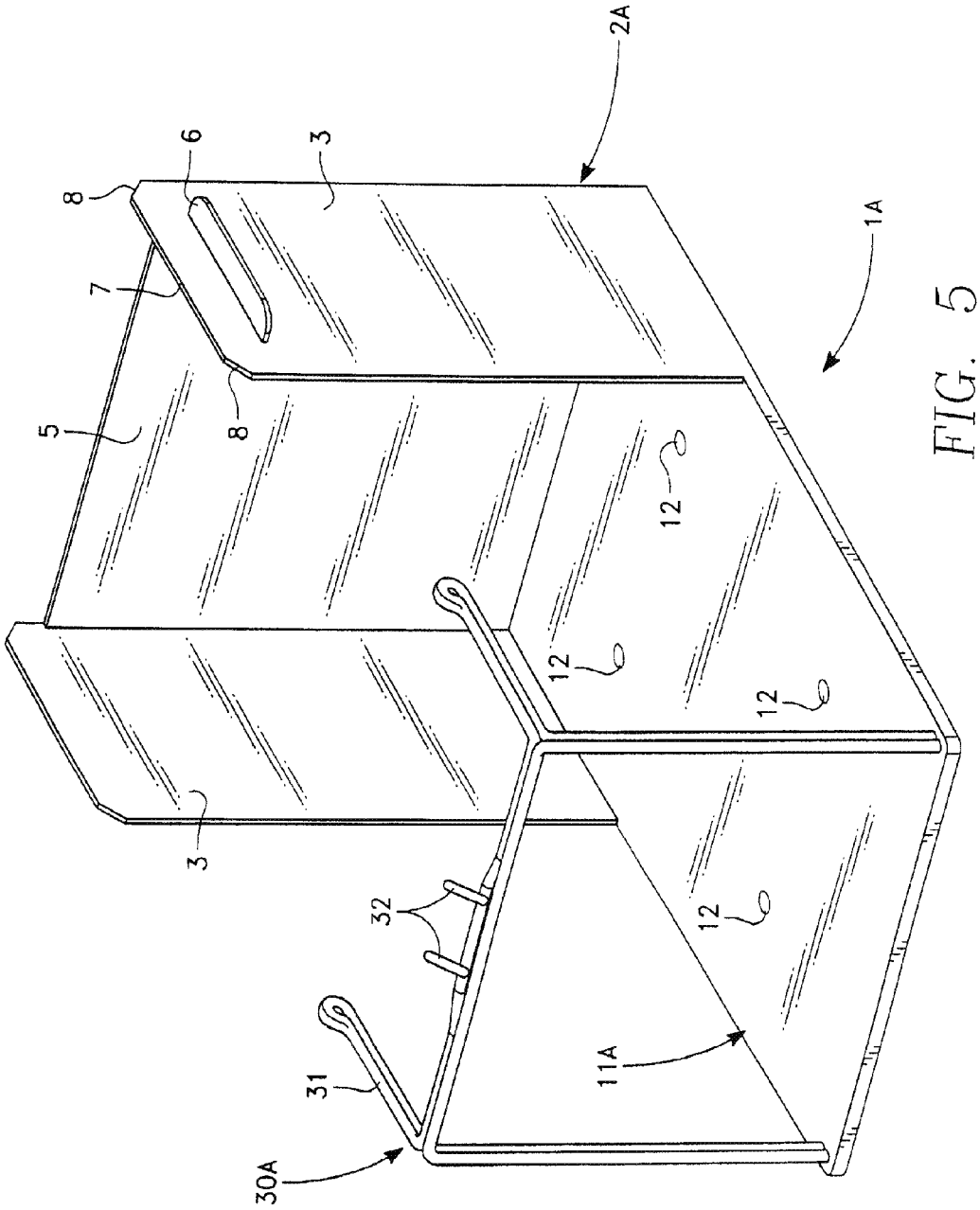

FIG. 5

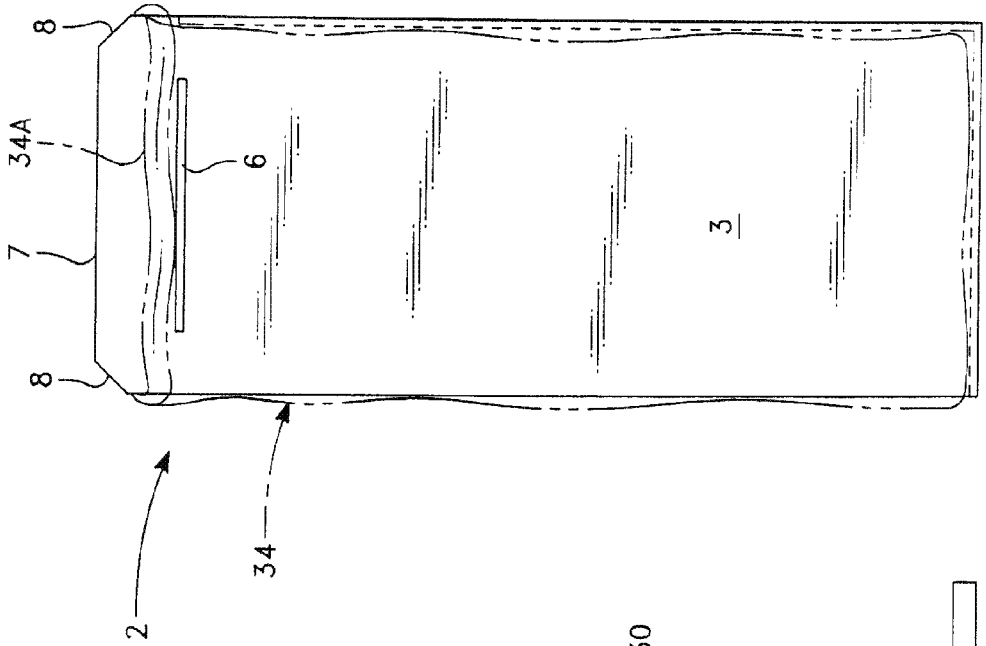

FIG. 7

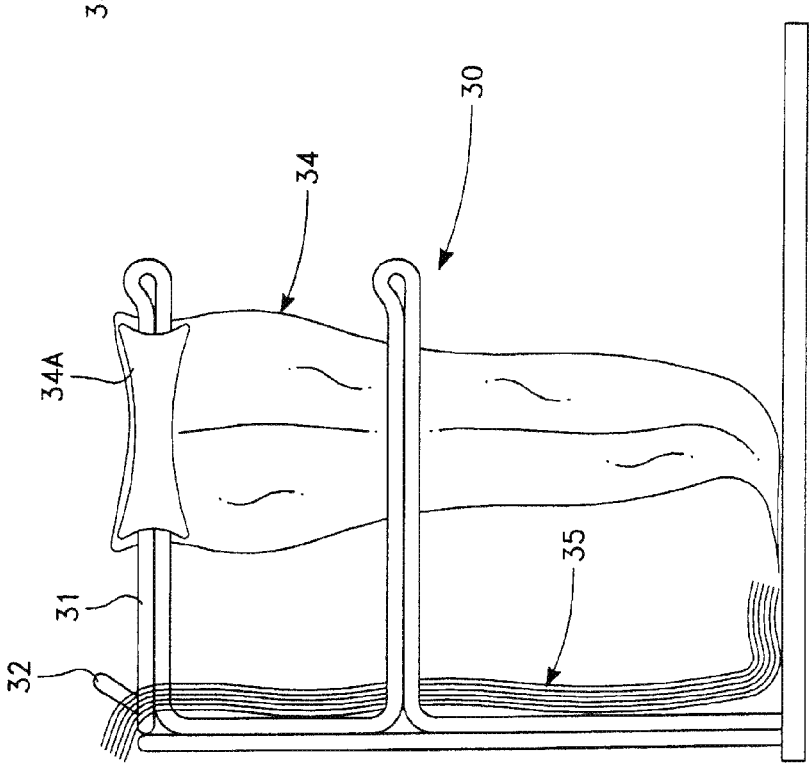

FIG. 6

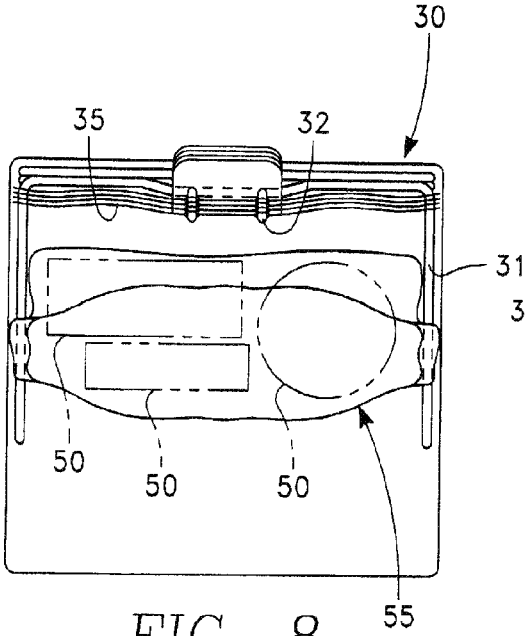

FIG. 8

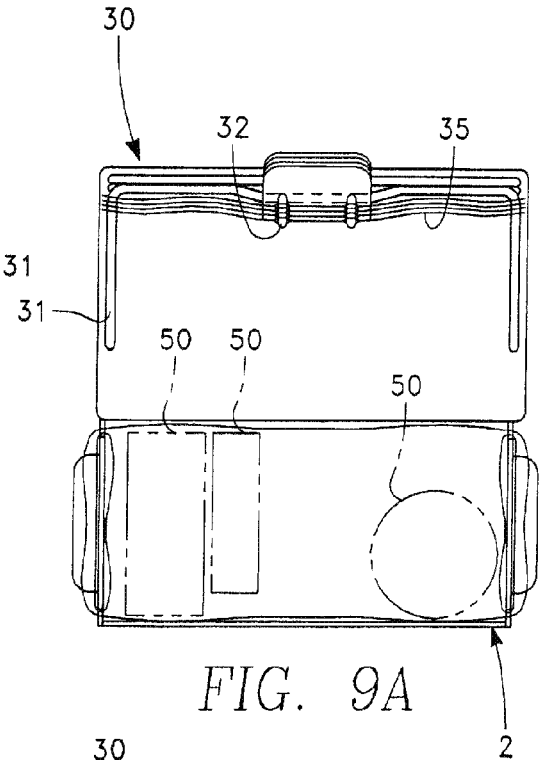

FIG. 9A

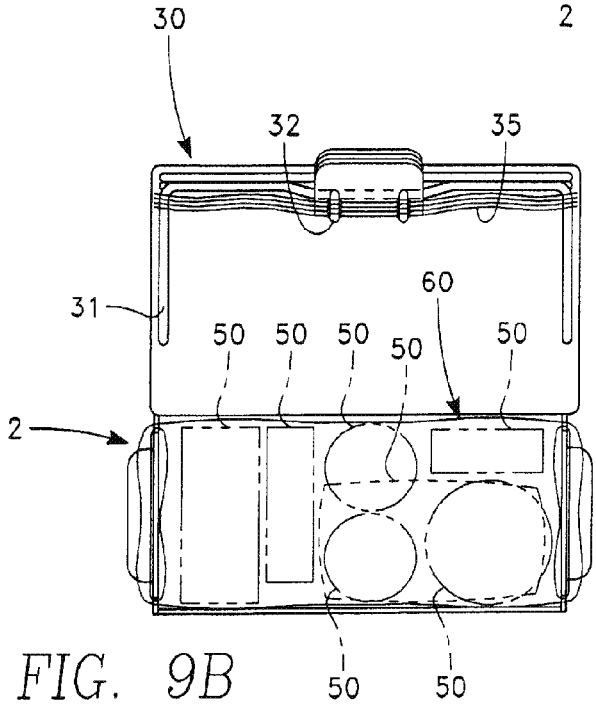

FIG. 9B

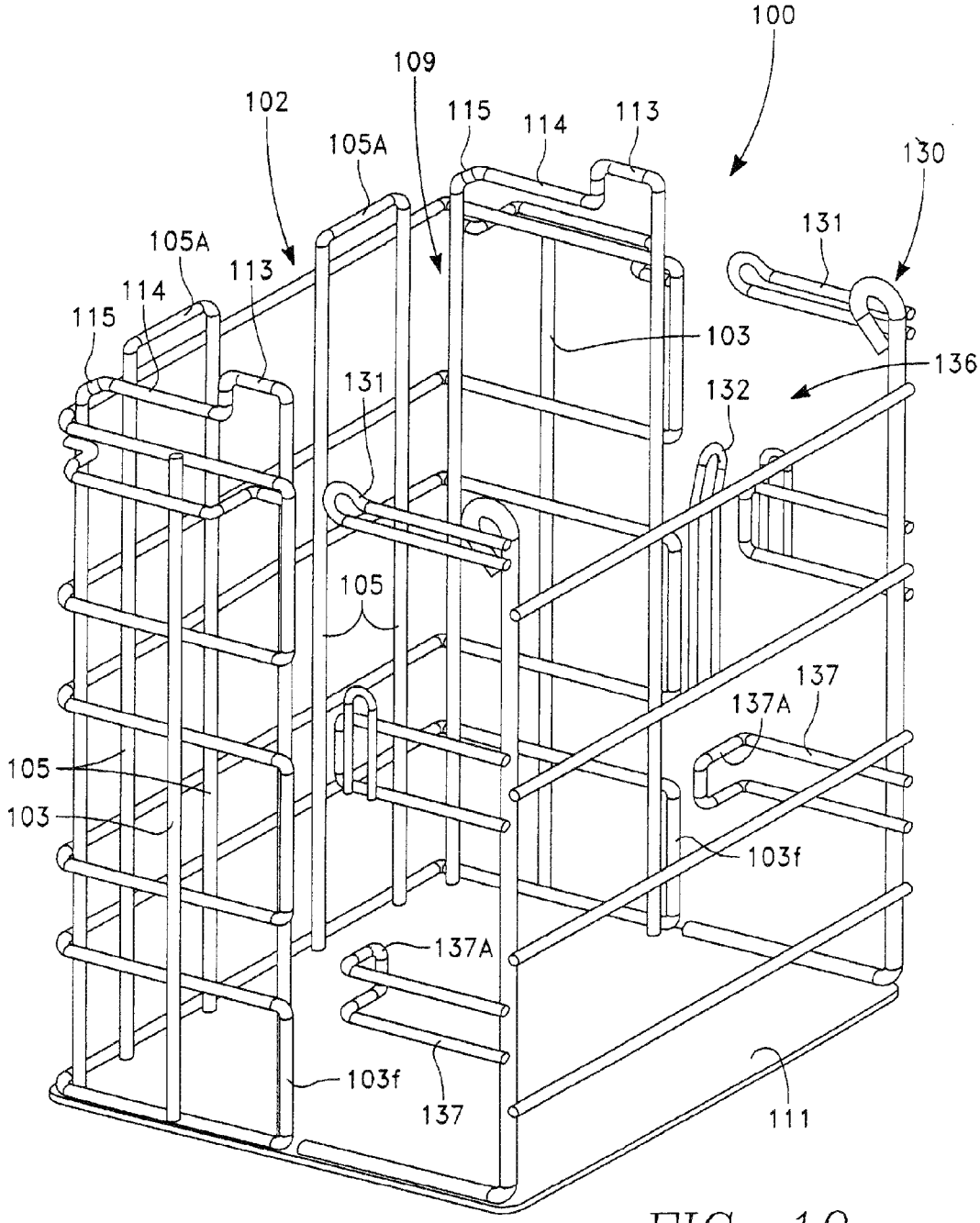
100
109
102
115
114
113
105A
130
131
105A
113
114
115
103
136
131
132
105
137
137A
105
103
103f
137A
103f
137
111

FIG. 10

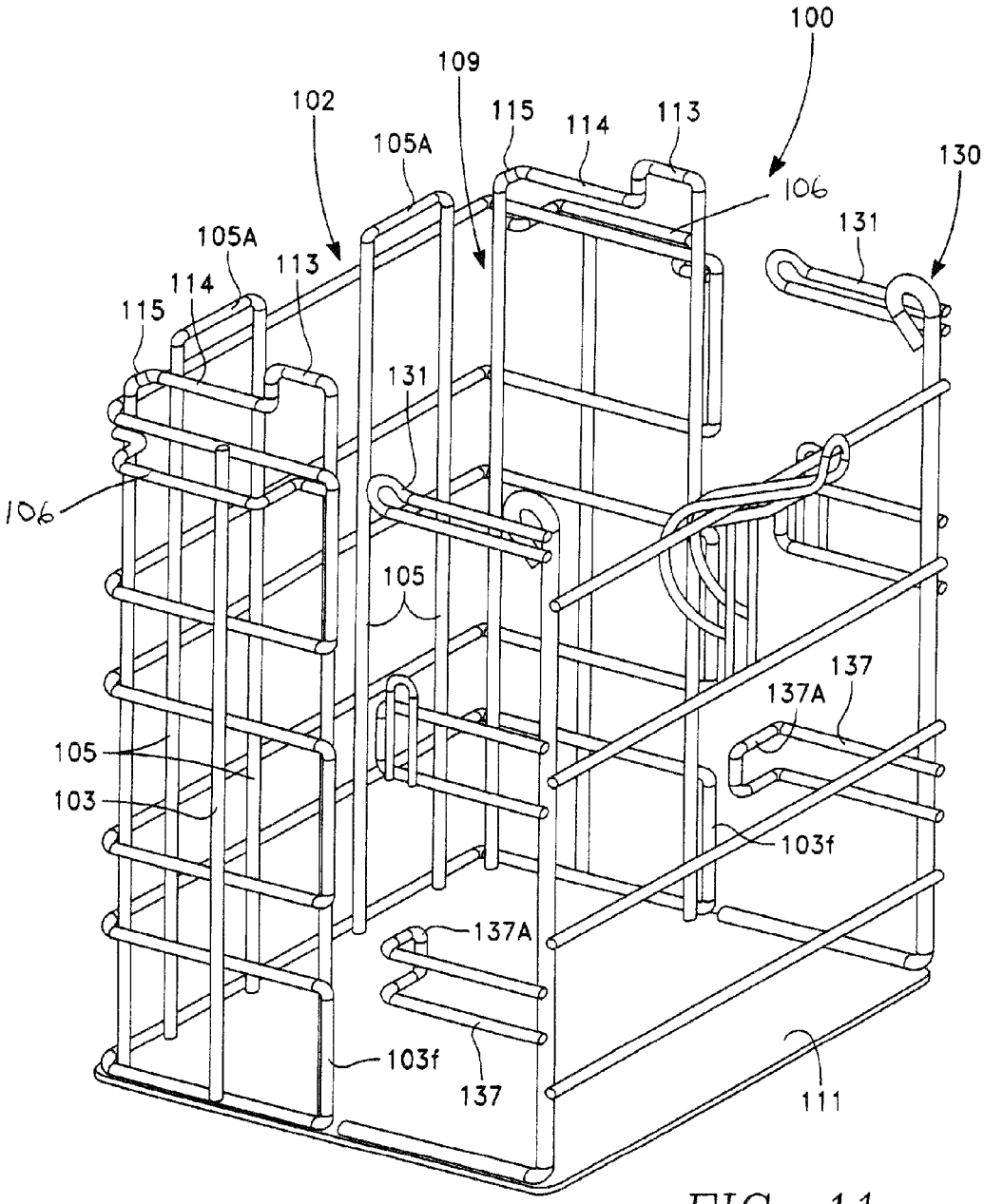
100
109
102
115
114
113
105A
106
130
131
105A
113
114
115
131
106
105
137
137A
105
103
103f
137A
103f
137
111

FIG. 11

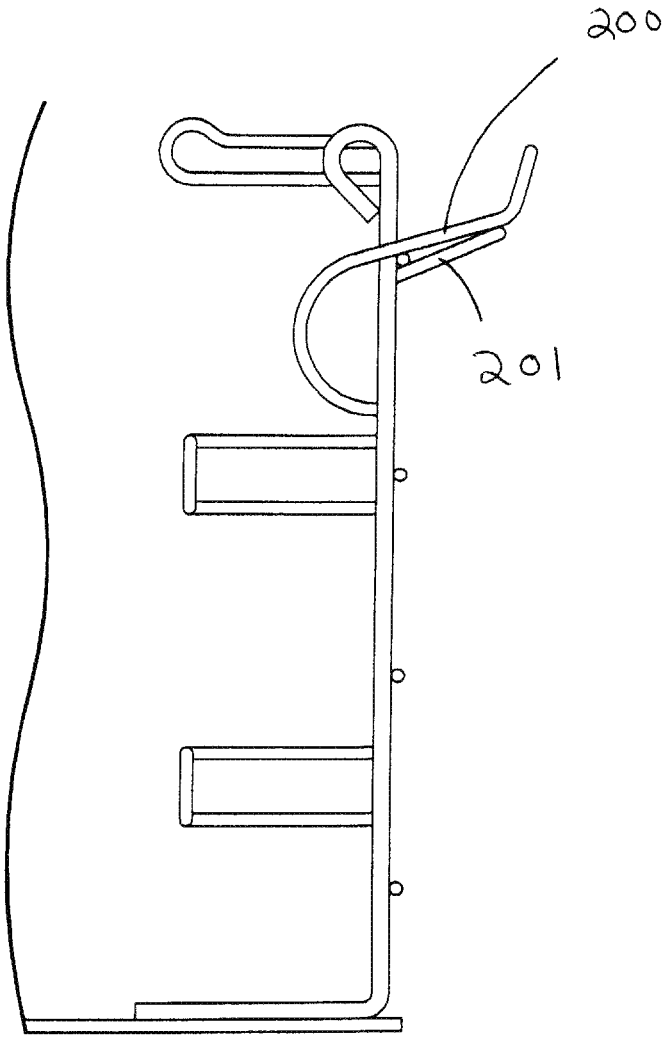

FIG. 12

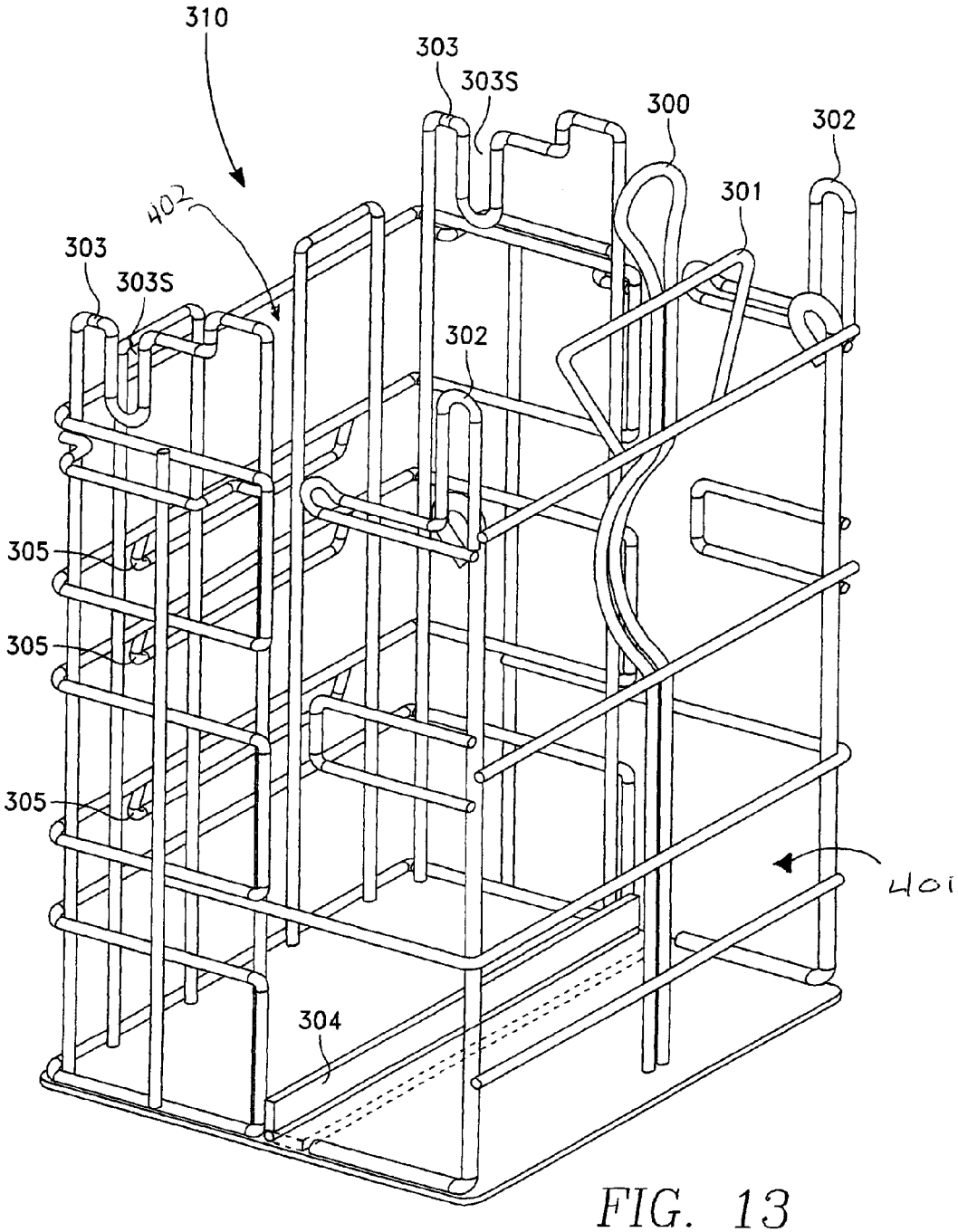

FIG. 13

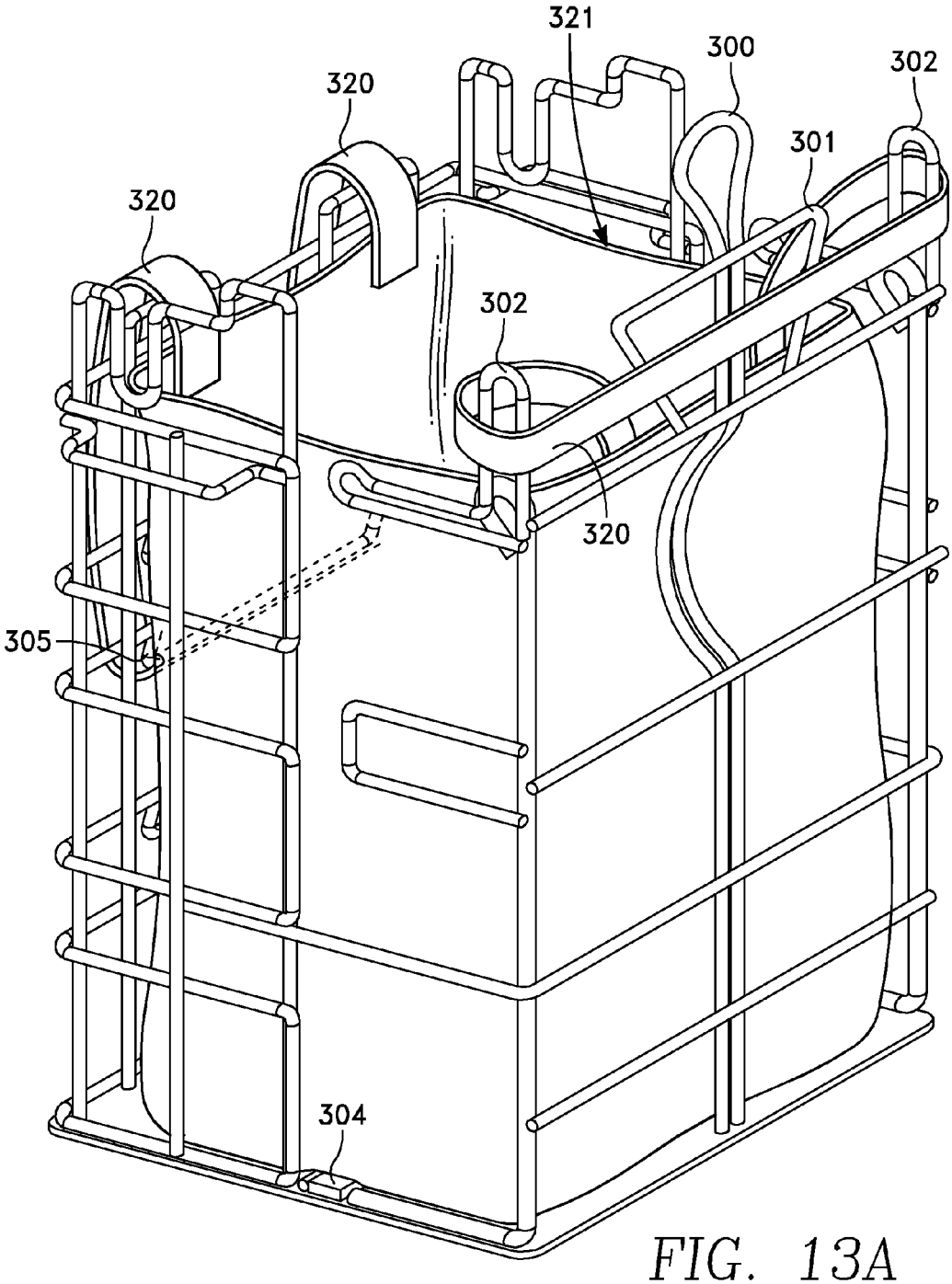

FIG. 13A

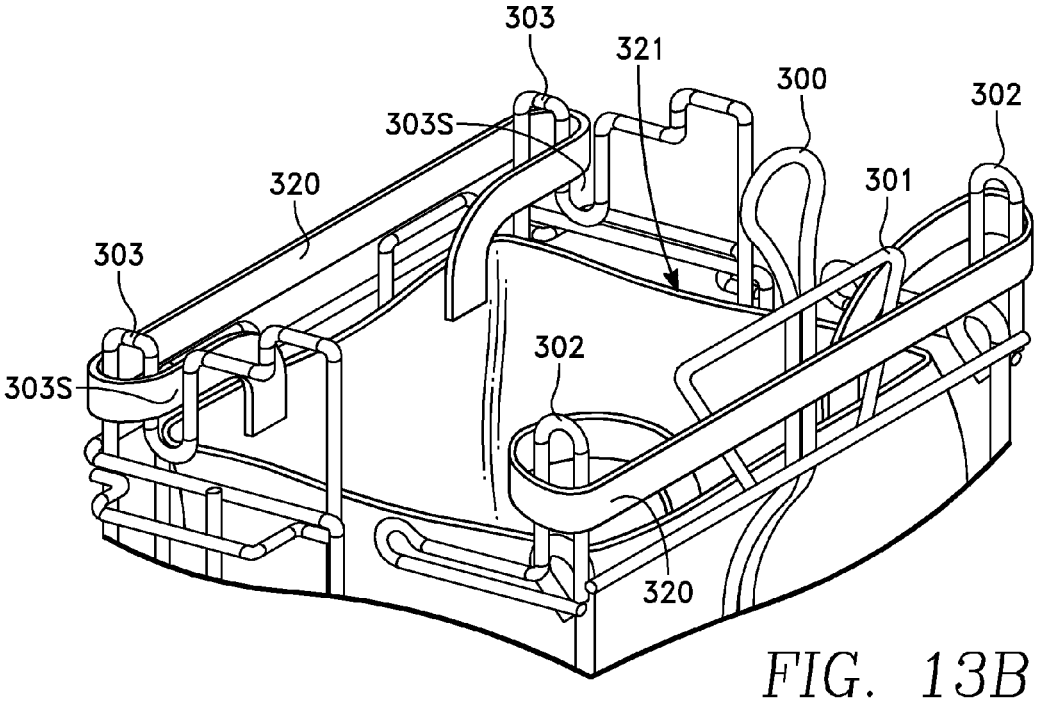

FIG. 13B

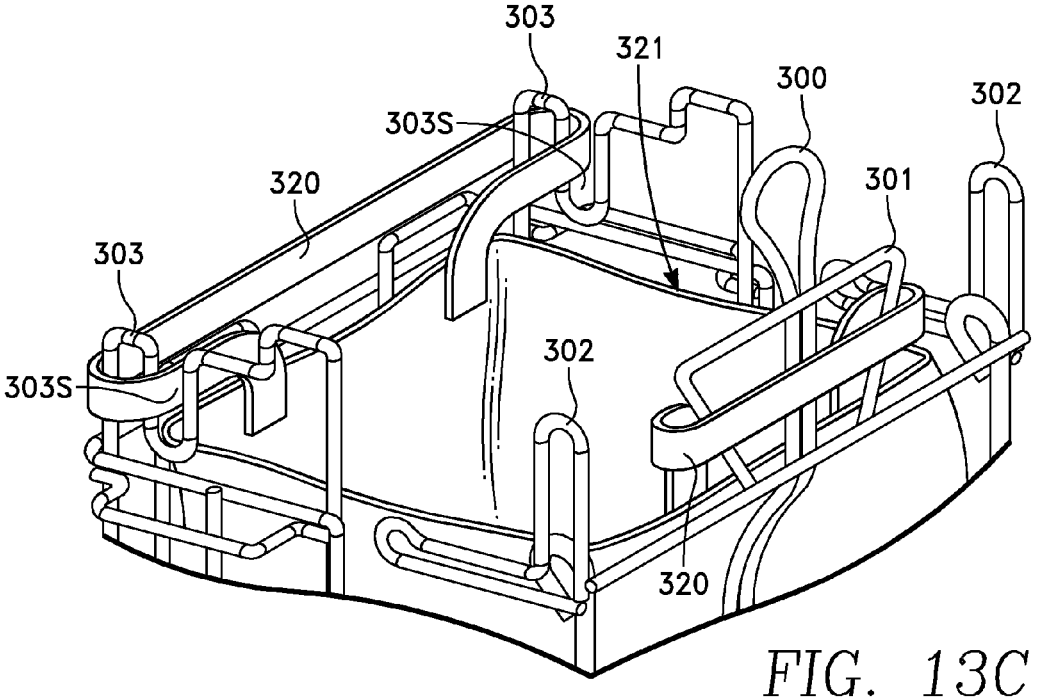

FIG. 13C

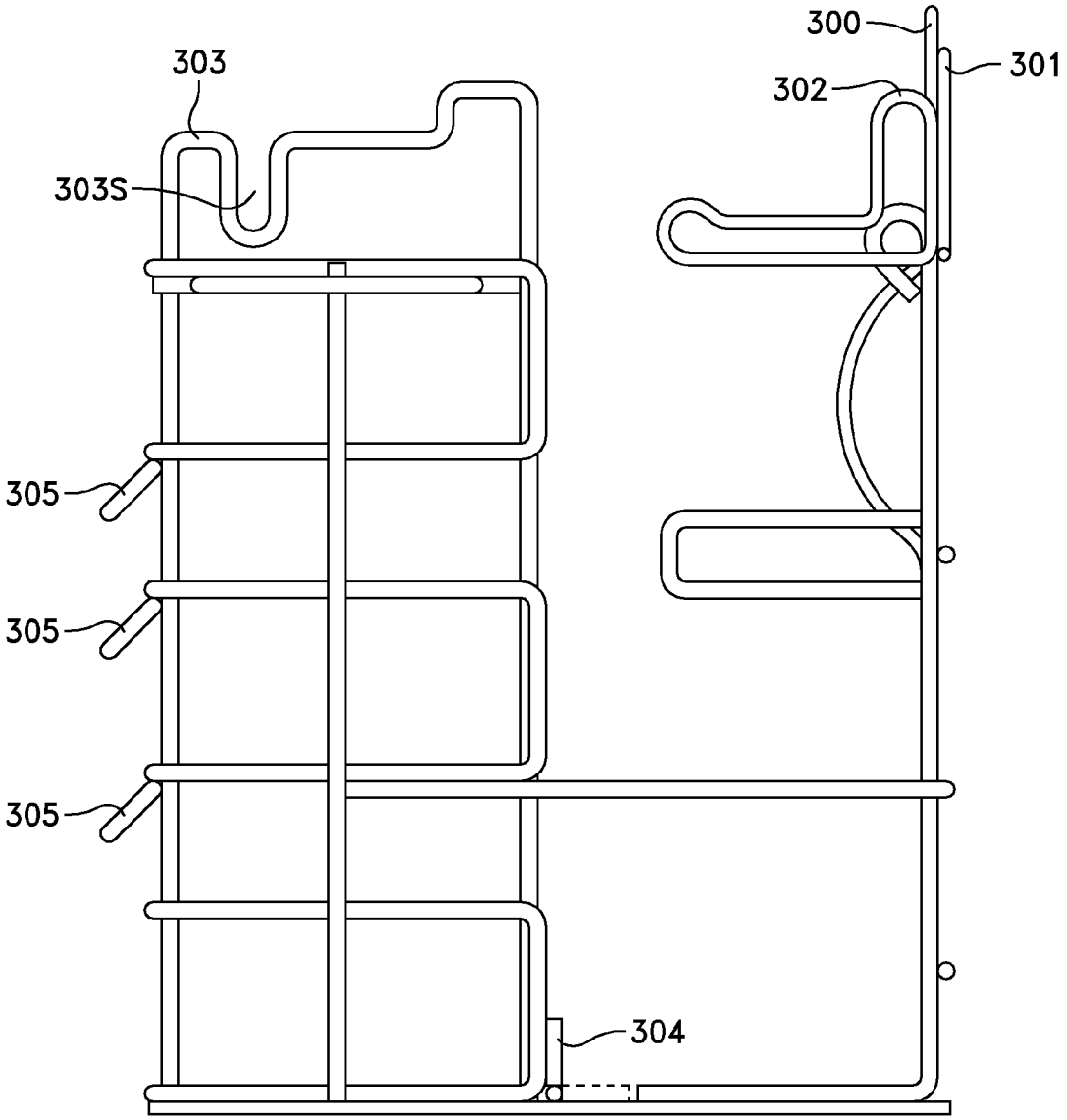

FIG. 14

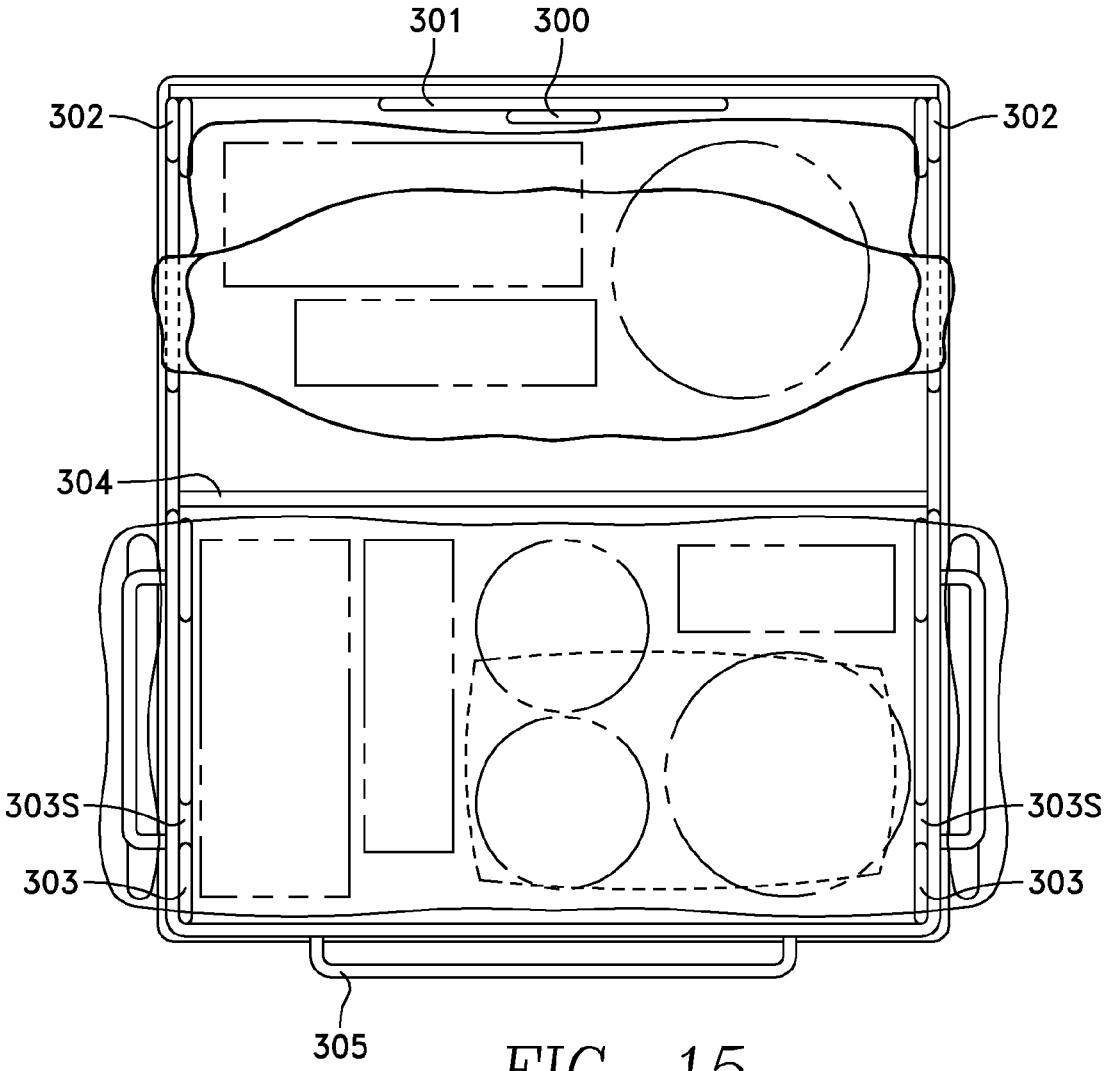

FIG. 15

SYSTEM AND METHOD FOR INCREASED FILLING OF PLASTIC GUSSETED T-SHIRT BAGS

CROSS-REFERENCE TO RELATED APPLICATIONS

This application is a continuation-in-part of U.S. Ser. No. 13/850,122, filed Mar. 25, 2013, which is a continuation-in-part of U.S. Ser. No. 12/882,045, filed Sep. 14, 2010, now U.S. Pat. No. 8,424,816, which itself is a continuation-in-part of U.S. Ser. No. 12/586,201, filed Sep. 17, 2009, which itself claims priority from U.S. Patent Application Ser. No. 61/164,460, filed Mar. 29, 2009, the disclosures of all of which are specifically incorporated herein by reference.

FIELD OF THE INVENTION

The present invention is in the field of all major types/forms of plastic, reusable and paper grocery bags and, more specifically, in the field of how they are dispensed, setup for packing and filled.

BACKGROUND OF THE INVENTION

Plastic Grocery Bags—the Beginning.

The plastic grocery bag, also known as a gusseted t-shirt bag, was first introduced 50 years ago. It became pervasive in supermarkets throughout the U.S. in the late 1970's. Today approximately 40,000 supermarkets utilize $1.3 billion worth of plastic grocery bags. Plastic grocery bags became an indispensable supply item for supermarket chains because they are so inexpensive relative to the main alternative—paper bags. Specifically, a plastic grocery bag is about ⅙th the cost of a paper bag. Because of this cost disparity the plastic grocery bag is now 85% of a supermarket's bag cost and paper bags, once the bag of choice, are now only 15%.

The cost disparity and resultant dominance in supermarket use of plastic grocery bags is important as background because it speaks to the philosophical view of supermarkets during the past few decades—"that even if 3 or 4 plastic grocery bags are used where previously one paper bag was used it is still less expensive than what we've been spending on paper bags".

Plastic Grocery Bad Issues—1970's.

Coinciding with this philosophy was the realization that plastic grocery bags were relatively weak especially along the bottom seal which could lead to heavy items falling through or sharp items ripping the bags. The consequence of such product failures were refunds to shoppers and general shopper dissatisfaction. The solution that evolved has been to significantly under fill a plastic grocery bag or "double bag" items. Unfortunately over time this behavior on the part of supermarket baggers has been taken to an extreme well beyond the true limitations of plastic grocery bags. Studies show that on average less than 50% of available volume of a standard plastic t-shirt bag is being utilized and 10% of supermarket usage is for double bagging.

The physical nature of plastic grocery bags has been a continual issue over the decades but for significantly differing reasons. Early on after their introduction one of the primary issues was how do you open and keep open a plastic grocery bag so groceries can be put inside. Paper bags had historically just been placed on the check out counter and because they had a fixed shape could, once open, be easily loaded. Plastic grocery bags by contrast didn't have a fixed shape and the film

would stick together during and after opening so they were difficult to load and thus inefficient in a commercial retail setting.

Another problem, at that time, resulting from plastic grocery bags' tendency to stick to together was getting the "next" bag for packing without grabbing multiple bags at the same time. This problem led to both wasting a lot of bags and slowing down the checkout process.

Early Plastic Grocery Bag Industry Innovations/Inventions.

Because of these two issues early inventions regarding plastic-t-shirt bags centered on ways to effectively and efficiently grab, open and keep open a single plastic grocery bag during packing. Thus the wire-arm bag racks and self-opening plastic grocery bags that are now ubiquitous in supermarkets world-wide came to be. These, now industry standard, products ensure that plastic grocery bags are efficiently dispensed one bag at-a-time, opened wide and kept opened during loading.

Plastic Grocery Bag Issues—2009/Today.

What wasn't foreseen during the early days of plastic grocery bags' widespread use is how their relatively weak structure and disposable nature would lead to the tremendous underutilization, waste and environmental issues that are evident today. The carbon footprint, single-use and underutilization of plastic grocery bags are seen as a major issues by environmental groups, municipalities and concerned citizens—all looking for ways to curb or eliminate their use. Cities such as San Francisco have enacted laws and/or bag use taxes to accomplish just such reduced plastic grocery bag use.

Towards this end, inventions/innovations regarding plastic grocery bags today are now focused on reducing their underutilization, waste and negative environmental impact. For example, in regards to increasing the utilization of plastic grocery bags inventions such as the reinforced bottom seal have been introduced. This particular invention allows a plastic grocery bag to be completely filled, thus holding as much as a paper bag or reusable bag, without the bottom seal breaking or the bag ripping. This could potentially lead to a significant drop in plastic grocery bags used and plastic introduced into the environment.

Why Plastic Grocery Bags Remain Underutilized.

A limiting factor in the better utilization of plastic grocery bags during the bagging process is that they don't adequately take on and sustain an erect rectangular shape using the industry standard wire-arm bag rack. Specifically, plastic grocery bags sag during loading and start to look full before they actually are full and thus the bagger pre-maturely halts packing the current bag and moves on to a new bag.

While one bag at-a-time dispensing, opening and general packing of a plastic grocery bag is no longer an issue, as its been adequately addressed with past inventions adopted by the industry (such as self-opening bags and wide armed wire racks), this issue of optimal packing/filling of a plastic grocery bag has not been sufficiently addressed commercially. The national average, at supermarket chains, for grocery items in a plastic grocery bag, is 3.4 items per bag. This is less than half of what goes into a paper bag of equivalent size. Many major retailers are now pushing to get their average items per bag up. For example, in their most recent sustainability reports, Kroger and Wal-Mart cite the desire to increase item count to 5 and reduce bag waste by 33%, respectively.

Most efforts to reduce bag waste in a retail setting have centered on training baggers to put more in every bag such as Kroger's current Strive for Five program. While these programs generally have initial success the results are difficult to

sustain because supermarkets have high turnover in the bagger position, which is predominantly comprised of part-time employees who are very often high-school or college students.

Accordingly, there has been a long-felt need, that has not yet been met, for a, more natural, effective and sustainable method to achieve increased items per bag so as to reduce bag waste.

Overall Grocery Bag Industry Today (2014)

Additionally, today (2014), the supermarket bagging industry is experiencing revolutionary change as a result of; 1) many states and municipalities implementing or considering the implementation of laws banning and/or restricting the use of plastic bags, 2) the increase use, by shoppers, of alternative grocery bags such as reusable bags and paper bags, 3) the expansion of shapes, sizes and materials for "grocery bags", 4) stores no longer being the sole (and in regulated areas, the primary) source of shopping bags to pack items purchased in their stores, 5) the expansion of self-checkout lanes/shopper-assisted bagging stations nationwide, 6) the increasing health and safety concerns/regulations in regard to food safety and cross-contamination resulting in pervasive retailer item separation policies

A significant consequence of these revolutionary changes is a lack of a constant bagging scenario and lack of a uniform/standard bagging process across all the major bag types because; 1) dispensing and setting up a bag varies by bag type, 2) the quantity of bags used in a transaction is not always optimal from a packing standpoint as shoppers commonly bring in a lesser amount and commonly do not want to pay for additional bags, 3) Work spaces for bagging in any given store are not currently standardized across all bag types, as they had been for plastic grocery bags, thus slowing down checkout speeds and resulting in less consistent item placement in bags and item separation, 4) No current bag rack in a retail setting is designed to facilitate dispensing/and or packing of all of the major bag types and sizes . . . plastic, paper and reusable, 5) All bag types used when packed on conventional bag racks or in conventional packing spaces require the bagger to hold the bag open with one hand while packing with the other hand, and 6) item separation of incompatible items such as meats and cleaning fluids remain as a health and safety concern and commonly necessitates dual, simultaneous and separate bagging of items within a given transaction generally utilizing 2 bag racks.

SUMMARY OF THE INVENTION

The present invention is generally directed to a bag rack and packing system for plastic gusseted t-shirt bags, a diversity of reusable grocery bag types and a diversity of paper grocery bag types having a pair of handles which has a three-sided bag rack having a reservoir bag holder for plastic t-shirt bags and two arms, each with an upward rear loop, and a three-sided support having two side supports plus an intermediate back support and each of the side supports has a forward upper tab close to the three-sided bag rack, an intermediate top, a downward slot and then a rearward edge, the back support has hooks, for bag handle securing, at varying heights above the base and centered along the horizontal plane at varying widths, the three-sided bag rack and three-sided support having open faces that face each other so that the three-sided support temporarily creates a defined physical frame for a first plastic grocery bag when its handles are secured over the forward upper tabs of the two side supports. The cavity/enclosure created by the alignment of the three-sided bag rack and three-sided support assist, by forming "containment walls" in the freestanding of inserted/placed diversity of grocery bags including reusable type bags and paper bags which is executed fully when the handles of a bag are extended around the hooks and or loops and or inserted into the downward slot of the rack.

A crossbar (that can be permanent, temporary, attachable, hinged or other connected via other methods of securing) when fully engaged is seated upon the width of the base/bottom surface situated between the three-sided bag rack and the three-sided support so as to create a functional barrier to facilitate and maintain separation during simultaneous packing of a bag fully dispensed onto the three-sided support from a separate bag pulled forward, but not removed, on the three-sided bag rack side-arm and the engaged crossbar.

The efficiency of filling a plastic grocery is increased by extending the pair of handles of the plastic bag over a pair of forward upper tabs of a three-sided support so as to temporarily create a defined physical frame for the plastic grocery bag, then filing the plastic grocery bag, and removing it from the three-sided support.

The speed and efficiency of filling a reusable and paper bag is increased by causing it to be freestanding, not requiring assisted human support, and completely open for two-hand packing as a result of placing the bag into the cavity/enclosure created by the alignment of the three sided bag rack and three-sided support and then extending rear facing bag handles around the upward rear arm loop or rear bag stop bar loop of the three-sided bag rack and placing front facing bag handles into side support slots or around hooks located on rear edge of the three-sided support.

Accordingly, it is a primary object of the present invention to provide an improved system and method for filling all major types/forms of grocery bags with bagged items and to provide a more efficient system and method for item separation.

This and further objects and advantages will be apparent to those skilled in the art in connection with the drawings and the detailed description of the preferred embodiment set forth below.

BRIEF DESCRIPTION OF THE DRAWINGS

FIG. **1** Illustrates a front view slightly offset at an angle of a support for plastic bags in an earlier invention.

FIG. **2** illustrates a side view of the support of FIG. **1**.

FIG. **3** illustrates a top view of the support of FIG. **1**.

FIG. **4** illustrates a standard wire bagging rack coupled with a support for plastic grocery bags in accordance with an earlier invention. The system of FIG. **4** illustrates an add-on for an existing standard wire bagging rack while

FIG. **5** illustrates the same type of overall system constructed in a single unit.

FIG. **6** illustrates a side view of a standard wire bagging rack in which a plastic grocery bag has been removed from a store of such bags and moved out onto side arms while

FIG. **7** illustrates a side view of a support for plastic grocery bags used in a preferred embodiment of the present invention with a plastic grocery bag being (shown in phantom) being supported.

FIG. **8** illustrates a standard wire bagging rack, from a top view, in which a plastic grocery bag has been filled with three items and looks full.

FIG. **9**A illustrates a bag holder system in accordance with an earlier invention, from a top view, in which a plastic grocery bag has been filled with the same three items shown in FIG. **8**, while FIG. **9**B illustrates additional items added to

the bag holder illustrated in FIG. **9**A. The dashed item in FIG. **9**B represents an additional overlying lying on top of other items.

FIG. **10** illustrates a preferred embodiment of an earlier invention.

FIG. **11** illustrates an improved embodiment of the system illustrated in FIG. **10** while

FIG. **12** is a detailed side view of the change between FIG. **10** and FIG. **11**.

FIG. **13** illustrates a preferred embodiment of the present invention while FIGS. **13**A-C illustrate different ways in which different bags can be held by the preferred embodiment illustrated in FIG. **13**.

FIG. **14** is a side view of the preferred embodiment shown in FIG. **13**.

FIG. **15** is a top view of the preferred embodiment shown in FIG. **13** illustrating how it can be used to fill two plastic bags at the same time.

DETAILED DESCRIPTION OF THE INVENTION

The present invention recognizes the current shift in issues related to plastic grocery bags as well as the overall supermarket bagging industry and provides a system specifically and particularly designed to respond to the commercial and environmental need to reduce plastic grocery bag waste through more effective and efficient packing of plastic grocery bags, sustain/improve industry standard checkout speeds while accommodating the increasing use of mixed/alternative, shopper supplied, bag types/forms such as reusable and paper bags, facilitate consistent and uniform packing procedures across all the major grocery bag types/forms. Additionally, this invention addresses the pervasive bagging need of item separation packing with dual bagging within a single rack format. This system also recognizes a future in which plastic grocery bags, such as those with reinforced bottom seals, are stronger than their historical counterparts and can be safely filled to capacity.

The present invention provides a plastic grocery bag system and method for supermarket chains/retailers to significantly increase items packed per bag, reduce the number of overall plastic grocery bags used and reduce the amount of plastic sourced and introduced into landfills (without sacrificing the convenient one bag at-a-time dispensing, self-opening & bagging ease currently enjoyed).

The present invention provides a universal grocery bag system and method for supermarket chains/retailers to significantly improve speed of checkout speed when bagging a mix of all the major bag types/forms, including plastic, reusable and paper bags and to maintain consistent & uniform bagging practices across all major bag types/forms.

The present invention provides a bag system and method for supermarket chains/retailers to increase efficiency with simultaneous dual bag dispensing and packing, for the purpose of item separation, within a single bag rack.

In the Figures and the following more detailed description, numerals indicate various features of the invention, with like numerals referring to like features throughout both the drawings and the description.

Although the Figures are described in greater detail below, the following is a glossary of the elements identified in the Figures.

1 plastic grocery bag holder system
1A plastic grocery bag holder system made of a single construction
2 3-sided support for plastic grocery bags
2A 3-sided support for plastic grocery bags made of a single construction
3 side support of 3-sided support **2**
4 bottom support of 3-sided support **2**
5 back support of 3-sided support **2**
6 sidewall flap of 3-sided support **2**
7 extended top of side support **3**
8 corner of extended top of side support **3**
9 open face of 3-sided support **2**
11 base plate
11A base plate made of a single construction
12 hole for fastener
30 standard wire-arm bagging rack
30A standard wire-arm bagging rack incorporated into **1**A
31 wire-arm of standard wire-arm bagging rack **30**
32 reservoir bag holder of standard wire-arm bagging rack **30**
33 base of standard wire-arm bagging rack **30**
34 plastic grocery bag
34A handle of plastic grocery bag **34**
35 reservoir of plastic grocery bags
36 open face of standard wire-arm bagging rack **30**
50 bagged item
51 filled plastic grocery bag of standard wire-arm bagging rack **30**
52 filled plastic grocery bag of bag holder system **1**
100 bag rack and packing system
102 three-sided support
103 side support
103*f* front end of side support **103**
105 back support
105A upper edge of back support **105**
106 sidewall flap of three-sided support **102**
109 open face of three-sided support **102**
111 base plate
113 forward upper tab
114 intermediate top
115 rearward edge
130 wire-arm rack
131 wire-arm
132 reservoir bag holder
136 open face of wire-arm bagging rack **130**
137 bag stability bar
137A inwardly facing catch of bag stability bar **137**
200 center hook
201 cross beam
300 center hook
301 cross beam
302 arm
303 arm
303S slot
304 crossbar
305 hook
310 bagging system
320 bag strap
321 grocery bag
401 middle side of three-sided rack
402 middle side of three-sided support

A "standard wire-arm bagging rack" in common use throughout the United States today is illustrated in phantom in FIG. **4**. The details of how a gusseted t-shirt bag **34** (hereinafter referred to as simply a "plastic grocery bag") is separated from a reservoir of plastic grocery bags **35** are not critical to the present invention except as they may relate to my improved system described later herein. A standard wire-arm bagging rack commonly has wire-arms **31**, a reservoir bag holder **32**, and a reservoir **35** of plastic grocery bags **34**.

The standard wire-arm bagging rack **31** functions to hold a reservoir of plastic grocery bags such that an individual plastic grocery bag can be easily removed from the reservoir, supported on wire-arms so as to hold the plastic grocery bag in an open position ready to be filled, filled, and then removed from open face **36**. The standard wire-arm bagging rack may be placed on top of a base surface or have its own base **33**. It is the type of rack that is commonly found at grocery stores or other retail stores where large volumes of items are bagged, hopefully quickly, by a checker or bagger.

My prior invention improved upon the standard wire-arm bagging rack **31** and how it is used by separating the function of the standard wire-arm bagging rack from the function of holding and filling plastic grocery bags. Instead of removing a plastic grocery bag from a reservoir and then filling it with bagged items while it is hanging from wire-arms, a system and method of filling plastic grocery bags in accordance with my prior invention removed a plastic grocery bag from a plastic grocery bag reservoir, then removed the plastic grocery bag from the wire-arms of the standard wire-arm bagging rack through open face **36**, placed the removed plastic grocery bag over a 3-sided support for plastic grocery bags **2**, and then filled the plastic grocery bag with bagged items **50** while it was supported separate and apart from the standard bagging rack.

My prior invention, by integrating a three-sided support **2** with a standard wire-arm rack **30**, temporarily created and sustained, for a plastic grocery bag, during the packing process, a defined physical frame (rectangle, circle, square, triangular, irregular etc.) that facilitated optimal full-capacity loading resulting in: 1) increased items per bag packed and/or a more complete filling of the bag, 2) a reduction in overall bags used per transaction and 3) the ability to easily pack items in a stacked manner to the top of the bag. By accomplishing these three things my prior invention was a significant contributor to reducing the amount of plastic needed in the retail supply chain and the amount of plastic going into landfills.

Important to the success of my prior invention was that the erect bag shape during bagging gave the bagger a very accurate perception of how full (or empty) the bag truly was (similar to the experience of filling a fixed shape paper or reusable bag) and led to a natural complete filling of a bag because an unfilled bag would now LOOK "empty" and thus it would belie common sense to stop filling it and start to fill a new one.

A 3-sided support for plastic grocery bags **2** in accordance with a preferred embodiment of my prior invention had a bottom support **4**, two side supports **3** and a back support **5** located between the two side supports **3**. One such 3-sided support **2** is shown in FIGS. **1-3**. Although side, bottom and back supports **3-5** are shown in FIGS. **1-3** as solid, they need not be. For example, they could be perforated or have some other type of non-continuous surface so as to save on material costs (see, e.g., FIG. **10**). The important thing was not the shape or absolute solidness of such supports, but that they function so as to support a filled plastic grocery bag **52** as illustrated in FIGS. **9**A and **9**B and described hereinafter. The two side supports **3**, back support **5** and bottom support **4** provided a three-sided structure with a bottom support which allowed a plastic grocery bag **34** to be opened to a full extent (as shown in FIGS. **4**, **7**, **9**A and **9**B) and supported in such position while it was being filled with bagged items **50**.

Each side support **3** had a sidewall flap **6** and extended top **7**. The corners **8** of extended tops **7** were preferably either rounded or angled (as shown in FIG. **4**) to avoid sharp edges otherwise associated with a ninety degree corner. Side supports **3**, in an especially preferred embodiment, were made of two pieces attached through a mechanism such as an adjustable lock pin or sleeve design (not shown in the Figures) that allowed the height of extended tops **7** to be adjusted to accommodate various bag dimensions.

Handles **34**A of plastic grocery bag **34** (with or without a reinforced bottom seal) were extended over extended tops **7** of 3-sided support **2** down to sidewall flaps **6** prior to packing it with contents. By extending handles **34**A over extended tops **7** down to sidewall flaps **6**, a wide opening was created and the body of the plastic grocery bag took on an erect, rectangular "paper bag shape" to maximize ease of packing and stimulate a natural increased filling of the bag resulting in more items per bag and less bags used. This rectangular shape was now a cavity visually that would naturally and intuitively stimulate an increased/complete filling of the bag (versus the previous method) resulting in more items per bag and less bags used. Baggers could now simply pack plastic grocery bags in the same manner they would a paper bag because a person filling the plastic grocery bag could visually see that it had more room for additional bagged items (see FIG. **9**A) and the bagged items were themselves supported by support **2**. The result was a filled plastic grocery bag **52** (see FIG. **9**B) that had more bagged items than a filled plastic grocery bag **51** of a standard wire-arm bagging rack **30** (see FIG. **8**)

Thus, by adding the 3-sided support **2** to existing wire-arm racks **31** and just training baggers how to place the bags onto the 3-sided support **2** retailers could, with my prior invention, naturally get and sustain significantly increased filling of EVERY plastic grocery bag.

My prior new method for packing a plastic grocery bag allowed retailers to reduce bag waste (and potentially bag cost) by at least 25% (assuming an increase of 1 item per bag over the national average of 3.4 items per bag) and potentially as much as 50% (assuming 50% under-utilization currently) if complete filling of the bag was achieved (which was possible and desirable with new plastic grocery bags such as the reinforced bottom seal t-shirt bag). In dollar terms this could mean $250-$500 million in annual bag cost savings industry-wide.

Additionally, fewer bags used also meant lower distribution costs and more valuable storage space for a retailer. Shopper satisfaction would also increase because they had less bags to carry for each shopping trip.

In sum, my prior invention was an innovative pro-business, pro environment solution that enabled plastic grocery bag manufacturers, retailers and shoppers to do the right thing in achieving a workable solution to the "plastic grocery bag" problem.

Because there are a great many standard wire bagging racks **31** in common use today, it was important that my prior invention could be adapted for use with such racks **31** to provide a legacy solution that did not require existing standard wire bagging racks to be replaced. This goal was achieved by use of an add-on system which was illustrated in FIG. **4**. A base plate **11** was used to connect a support for plastic bags **2** to a standard wire bagging rack **30**. The base plate could be fastened to support **2** and bagging rack **30** by fasteners (not shown) through holes **12**. The critical point here was not how support **2** and bagging rack **30** were fastened or held together, but that they were arranged and aligned directly opposed from each other so that open face **36** and open face **9** were directly opposite of one another to form a plastic grocery bag holder system **1** as shown in FIG. **4**. In other words, once a plastic grocery bag was removed from reservoir plastic grocery bag holder **32** of bagging rack **30**, the plastic grocery bag was moved off of arms **31** through open face **36** and then

directly moved into open face **9** where it was secured about extended tops **7** and sidewall flap **6** of support **2** in a quick, fluid movement that should not significantly slow down the bagging process.

When one was not confronted with a legacy system involving preexisting standard wire bagging racks **30** (e.g., in a new store or expansion of check-out lines in an existing store), one could use a plastic grocery bag holder system **1**A, a preferred embodiment of my prior invention which was illustrated in FIG. **5**. Plastic grocery bag holder system **1**A had a standard bagging rack **30**A, base plate **11**A and support **2**A all incorporated into a single, integral construction. Plastic grocery bag holder system **1**A had similar structure and function as plastic grocery bag holder **1**, the only difference being that it was designed and constructed as a single construction (with different parts) as opposed to requiring retrofitting necessary to combine two separate structures, bagging rack **30** and support **2**.

I previously invented a new plastic grocery bag holder system that is an improvement over my original invention and which justifies replacement of current bagging systems so as to achieve the benefits of my invention, hereinafter described. This new bag rack and packing system **100** is illustrated in FIG. **10**. To save on material costs it is illustrated as being made of wires, although it could certainly be made of solid materials, if one is willing to pay a higher material cost.

Bag rack and packing system **100** has a base plate **111** to which are attached a wire-arm rack **130** and a three-sided support **102**.

Wire-arm rack **130** has wire-arms **131** that are shorter than traditional wire-arms **30**, a reservoir bag holder **132**.

Three-sided support **102** has two side supports **103** connected by a back support **105**. Each of the two side supports **103** has a front end **103***f* that is closest to wire-arms **131**. The top of front end **103***f* (i.e., the portion furthest from base plate **111**) forms a forward upper tab **113** that then drops down to an intermediate top **114** which then drops down to rearward edge **115** which is proximate back support **105**.

When bag rack and packing system **100** is used, a bag packer (a.k.a. a bagger) will usually stand behind back support **105** relative to wire-arm rack **130**. The bagger will pull a bag from reservoir bag holder **132** and pull its two handles up over the two forward upper tabs **113** and then over an upper edge **105**A of back support **105** (which can be a solid edge or multiple edges, as shown in FIG. **10**, in which there are two edges). Sidewall flaps **106** of side supports **103** serve as a resting point for the handles of a bag when it is placed on three-sided support **102** and is ready to be filed to help sustain an erect bag shape and prevent it from sinking. Because the two handles of the bag hook over forward upper tabs **113** while the bag is still attached to the bag reservoir, forward upper tabs **113** serve the function of helping to efficiently open a single bag from a reservoir of bags. It is important that forward upper tabs **113** not be too high, since that will force the bag to have to be lifted up over them after packing, but they also cannot be too low, or they will not grab the bag handles. (And, in a less preferred embodiment, forward upper tabs **113** can be entirely removed, although this embodiment will not function as well.)

Once the bag has been filled, rearward edges **115** help the bag to be efficiently removed from bag rack and packing system **100**. It has been found that it is especially preferred that rearward edges **115** be beveled since such a shape allows for fast, easy removal, and speed is a critical issue in bagging. (It has also been found that not having a sloped rearward edge, in other words just having a straight up and down edge, makes a filled bag too hard to remove, whereas using a curved or rounded rearward edge allows the bag to come off too easily during the packing process.)

My prior improved invention will now be described in even greater detail by setting forth the dimensions of an especially preferred embodiment. Such dimensions are not meant to be limiting of the scope of the present invention, but to be illustrative.

In this especially preferred embodiment, base plate **111** is twelve inches by twelve inches. This is especially preferred because it allows back rack and packing system **100** to fit into the same cube currently used for standard wire-arm bagging racks **30**. Wire-arms **131** are parallel to, and 10½ inches above, base plate **111**, while bag stability bars **137** are 3⅜ inches above base plate **111**. Wire-arms **131** are 4 inches long and there is a 2 inch gap between them and front end **103***f*. Front end **103***f* is approximately 15 inches high off of base plate **111**. Forward upper tabs **113** are one inch long and then drop 1¼ inches to intermediate tops **114** which then run 4½ inches until beveled rearward edges **115** drop another ½ inch with a 45 degree bevel.

This especially preferred embodiment has additional advantages over a standard wire-arm bagging rack **30** because, even though its wire-arms **131** are shorter than standard wire-arms **31**, they can be packed full of bags, which means they can hold twice the number of bags (including the same type of bags now being used) and this saves loading time and labor costs.

In my prior application Ser. No. 13/850,122 I disclosed an additional improvement to the new plastic grocery bag holder system disclosed in my prior patent application U.S. Ser. No. 12/882,045, and I have also made additional improvements to that application as well.

In my new improvements, the reservoir bag holder of FIG. **10** is extended behind/beyond the loading wall, or alternatively the center hook **300** and cross beam **301** underneath are raised vertically a sufficient distance (see FIG. **13**) which is adequate to restrain every bag loaded onto rack **130** from inadvertently coming off the rack when preceding bags are detached during packing process. Center hook **200** also has a wider cross beam **201** underneath it (see FIG. **12**) to prevent bags from slipping towards back support **105**. In some versions on this invention, the cross beam underneath the center hook may be specifically wide enough to accommodate the securing of a handle of a diversity of bag types/forms including reusable and paper bags (see FIG. **13**C).

In some versions of this present invention the wire arms of the three-sided bag rack reservoir each have an arm **302**, such as the upward rear loops shown in FIG. **13**, which are sufficiently tall and spaced apart from each other horizontally so as to accommodate the securing of a handle of a diversity of bag types/forms including reusable and paper bags. Note that many different types of arms and constructions can be used to form such arms; accordingly, the loops shown in FIG. **13** are simply one way of forming such arms, meant to be illustrative, but not limiting, of the present invention. Also, as used in the present invention, "arm" is meant to be any structural device and/or configuration that serves the purpose of providing a structural support for securing or holding a bag handle of a grocery bag **321** to thereby help position such grocery bag within bagging system **310**.

In some versions of this present invention the side wall tops of the three-sided support each contain a downward slot **303**S to form arms **303** in which to insert or secure a bag handle and an intermediate back support containing hooks **305**, for a

diversity of bag handles, to be secured, at varying heights above the base and centered along the horizontal plane at varying widths.

In this present invention the cavity/enclosure created by the alignment of the three-sided bag rack and three-sided support assist, by forming "containment walls" in the freestanding of inserted/placed diversity of grocery bags including reusable type bags and paper bags which is fully executed when the handles of the inserted/placed bags are extended around the appropriate aforementioned cross beam or rear arm loops of the three-sided rack and the other is inserted into the aforementioned downward slots on the intermediate top of the side-wall support or around the back support hooks.

In some versions of this present invention a crossbar **304** (which can be permanent, temporary, attachable, hinged or other connected via other methods of securing) when engaged is seated upon the width of the base/bottom surface situated between the three-sided bag rack and the three-sided support so as to create a functional barrier to facilitate and maintain separation during simultaneous packing of a bag fully dispensed onto the three-sided support from a separate bag pulled forward on the three-sided bag rack side-arms (but not removed) and separated by the engaged crossbar. Note that crossbar **304** need not cover the entire length of the base, as is shown in FIG. **13**, and need not even be continuous or be a "crossbar." Accordingly, as used in the present invention, "crossbar" simply means any structure or combination of structures that create a functional barrier, which can also be quickly removed or adjusted to remove the functional barrier, since the crossbar is especially useful when bagging system **310** is being used with two plastic bags from a reservoir of plastic t-shirt bags, but will only get in the way when bagging system is being used with a grocery bag not obtained from such reservoir.

Accordingly, the current invention improves upon my past inventions in several ways. As shown in FIG. **13**, a bagging system **310** is disclosed that can meet all sorts of bagging needs now found stores that are not only dispensing plastic bags, but also which must use bags of all sizes that might be brought by customers. If a customer brings a grocery bag **321** with a pair of handles or straps **320**, the grocery bag can be placed inside of bagging system **310** so that its handles are oriented directly towards two opposing middle sides **401** and **402** of the three-sided rack and the three-sided support in a horizontal direction where it will be supported by its walls and two of the straps can be secured to bagging system **310**, one on three-sided back rack, another on the three-side support. This offers a tremendous advantage over having no method of containing such a bag. In addition, bagging system **310** can still function, with plastic bags maintained in a reservoir, and offer the same advantages, as I previously described in my U.S. Pat. No. 8,424,816. In addition, by use of crossbar **304**, the same bagging system **310** can now be used with two plastic bags at the same time, which offers the bagger the ability to place certain items, such as frozen foods or meats, in a plastic bag being held in the three-sided back rack, while still using the three-sided support to better fill a second plastic bag with other items, as I have previously described. And, again, the same bagging system **310** can then be used with another customer that does not need to obtain a plastic bag from the store, but has one or more grocery bags owned by the customer. Thus, my new bagging system **310** offers many advantages and provides a system that can be used in many ways to fit different needs and different circumstances.

While the invention has been described herein with reference to certain preferred embodiments, those embodiments have been presented by way of example only, and not to limit the scope of the invention. Thus, for example, either or both of the three-sided bag rack and its opposing three-sided support might be made of solid materials, be attached or not together and/or to a base, or have portions of them affixed to walls of a bag loading area. Additional embodiments and further modifications are also possible in alternative embodiments that will be obvious to those skilled in the art having the benefit of this detailed description.

Accordingly, still further changes and modifications in the actual concepts described herein can readily be made without departing from the spirit and scope of the disclosed inventions as defined by the following claims.

What is claimed is:

1. An apparatus useful with a plastic t-shirt bag and a diversity of other grocery bags including reusable grocery bags and paper grocery bags having a pair of handles, comprising:

a three-sided bag rack comprised of a reservoir bag holder for a plurality of plastic t-shirt bags and two side arms, said three-sided bag rack having a first open face from which a first plastic grocery bag can be removed so as to extend it outwardly from the reservoir bag holder;

a three-sided support positioned opposite the three-sided bag rack in a horizontal direction comprised of two side supports and an intermediate middle support so as to form a second open face; and

an engaged crossbar that can be engaged so as to create a functional barrier between a bottom portion of the three-sided bag rack and a bottom portion of the three-sided support to facilitate and maintain separation during a simultaneous packing of the first bag fully dispensed onto the three-sided support from a second bag pulled forward, but not removed, on the two side arms of the three-sided bag rack, said first bag and said second bag being separated by the engaged crossbar;

wherein a first open face and the second open face are aligned opposite of each other in the horizontal direction;

wherein the three-sided support is constructed so as to temporarily create a defined physical frame for the first plastic bag when the pair of handles of the first plastic grocery bag are removed from the two side arms and are extended and secured over the two side supports; and

wherein a forward upper top is more distant from a plane located below the three-sided bag rack and the three-sided support than the intermediate top and a rearward edge drops from the intermediate top toward the plane.

2. The apparatus of claim **1** wherein the three-sided bag rack, the three-sided support and the crossbar are separately attached to a base.

3. The apparatus of claim **1** wherein the three-sided bag rack and the three-sided support are located above and detached from a base.

4. The apparatus of claim **1** wherein the three-sided bag rack and the three-sided support are attached to each other.

5. The apparatus of claim **1** wherein the three-sided bag rack and the three-sided support are not attached to each other.

6. The apparatus of claim **1** wherein the two side arms are not attached to the reservoir bag holder.

7. The apparatus of claim **1** wherein the two side arms are attached to the reservoir bag holder.

8. The apparatus of claim **1** wherein the three-sided bag rack further comprises a pair of arms extending upwardly in a plane substantially perpendicular to a second plane contain-

ing the two side arms, said pair of arms having a height sufficient to accommodate and secure a handle of a diversity of bags.

9. The apparatus of claim **1** wherein the reservoir bag holder is further comprised of a center hook which extends above a loading wall a sufficient distance for restraining the plurality of plastic bags from coming off the center hook when a first bag is removed from the plurality of bags and the three-sided bag rack.

10. The apparatus of claim **9** further comprising a cross beam directly underneath the center hook which has a sufficient width to accommodate the securing of a handle of a diversity of bags.

11. The apparatus of claim **1** wherein each of the two side arms has an upward rear arm to accommodate securing a handle of a diversity of bags.

12. The apparatus of claim **1** wherein the two side supports of the three-sided support each have a downward slot along its top to secure a bag handle of a diversity of bags.

13. The apparatus of claim **1** wherein the intermediate middle support of the three-sided support contains a plurality of hooks for securing a diversity of bag handles at a plurality of heights above a base and centered along a horizontal plane at varying widths.

14. A method, comprising the steps of:

pulling a first plastic grocery bag with a pair of handles from a plastic grocery bag reservoir of a three-sided bag rack;

removing the pair of handles of the first plastic grocery bag from two side arms of the three-sided bag rack through an open face of the three-sided bag rack;

extending and securing the pair of handles of the first plastic grocery bag over a pair of handle supports so that the first plastic grocery bag is held and sustained in an erect bag shape defined by a physical frame of a three-sided support, said three-sided support having a second open face opposite the open face in a horizontal direction;

engaging a crossbar to create a functional barrier between a bottom portion of the three-sided bag rack and a bottom portion of the three-sided support to facilitate and maintain separation during a simultaneous packing of the first plastic grocery bag and a second plastic grocery bag;

pulling the second plastic grocery bag with a second pair of handles from the plastic grocery bag reservoir while leaving the second pair of handles on the two side arms of the three-sided bag rack;

placing one or more bagged items within the first plastic grocery bag while it is being supported separate and apart from the three-sided bag rack; and

placing one or more additional bagged items within the second plastic grocery bag while the first plastic grocery bag is being supported separate and apart from the three-sided bag rack.

15. A method, comprising the steps of:

inserting a grocery bag with a pair of handles in between a three-sided rack and a three-sided support such that the handles of the bag are oriented directly towards two opposing middle sides of the three-sided rack and the three-sided support in a horizontal direction;

securing a first bag handle of the grocery bag around a first bag handle securing means of the three-sided rack;

securing a second bag handle of the grocery bag in a second bag handle securing means of the three-sided support; and

placing one or more bagged items within the grocery bag while the bag body is being contained and supported by a plurality of walls of an overall enclosure formed by the three-sided rack and the three-sided support.

16. The method of claim **15** wherein the one or more bagged items are placed within the grocery bag without the necessity of using a hand to sustain the grocery bag in an open position in which it can be packed.

* * * * *