US009048528B1

(12) **United States Patent**
Lee et al.

(10) **Patent No.: US 9,048,528 B1**
(45) **Date of Patent: Jun. 2, 2015**

(54) **ANTENNA STRUCTURE WITH STRONGLY COUPLED GROUNDING ELEMENT**

(71) Applicant: **AMAZON TECHNOLOGIES, INC.**, Reno, NV (US)

(72) Inventors: **Tzung-I Lee**, San Jose, CA (US); **Young R. Cha**, Cupertino, CA (US)

(73) Assignee: **Amazon Technologies, Inc.**, Reno, NV (US)

(*) Notice: Subject to any disclaimer, the term of this patent is extended or adjusted under 35 U.S.C. 154(b) by 0 days.

(21) Appl. No.: **14/466,767**

(22) Filed: **Aug. 22, 2014**

Related U.S. Application Data

(63) Continuation of application No. 13/626,404, filed on Sep. 25, 2012, now Pat. No. 8,847,828.

(51) **Int. Cl.**
H01Q 1/24 (2006.01)
H01Q 9/04 (2006.01)
H01Q 5/00 (2006.01)

(52) **U.S. Cl.**
CPC ***H01Q 9/0414*** (2013.01); ***H01Q 9/0407*** (2013.01); ***H01Q 5/0044*** (2013.01); ***H01Q 5/378*** (2015.01); ***H01Q 5/30*** (2015.01)

(58) **Field of Classification Search**
CPC H01Q 5/30; H01Q 5/378; H01Q 1/24; H01Q 1/242; H01Q 1/243; H01Q 9/0407; H01Q 9/0414
USPC 343/702, 848
See application file for complete search history.

(56) **References Cited**

U.S. PATENT DOCUMENTS

6,734,825	B1 *	5/2004	Guo et al.	343/700 MS
6,985,114	B2	1/2006	Egashira	
7,050,010	B2	5/2006	Wang et al.	
7,136,019	B2	11/2006	Mikkola et al.	
7,705,784	B2	4/2010	Lai et al.	

OTHER PUBLICATIONS

USPTO Notice of Allowance for U.S. Appl. No. 13/626,404 mailed Jun. 12, 2014.
USPTO Non-Final Office Action for U.S. Appl. No. 13/626,403 mailed May 15, 2014.
USPTO Notice of Allowance for U.S. Appl. No. 13/626,403 maield Jul. 28, 2014.

* cited by examiner

Primary Examiner — Hoang V Nguyen
(74) *Attorney, Agent, or Firm* — Lowenstein Sandler LLP

(57) **ABSTRACT**

Antenna structures of electronic devices and methods of operating the electronic devices with the antenna structures are described. One antenna structure includes a ground plane, a radio frequency (RF) feed, a first antenna element coupled to the RF feed, a second antenna element coupled to the RF feed and a third antenna element coupled to the ground plane at a grounding point. The third antenna element is at least partially disposed between the first and second antenna elements to form a first coupling between the first antenna element and the third antenna element, a second coupling between the second antenna element and the third antenna element and a third coupling between the second antenna element and the third antenna element.

20 Claims, 9 Drawing Sheets

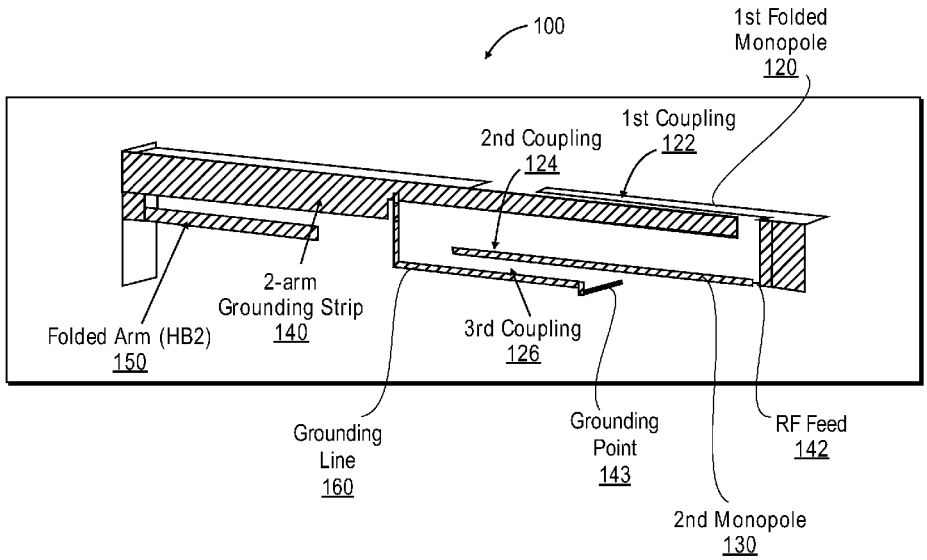

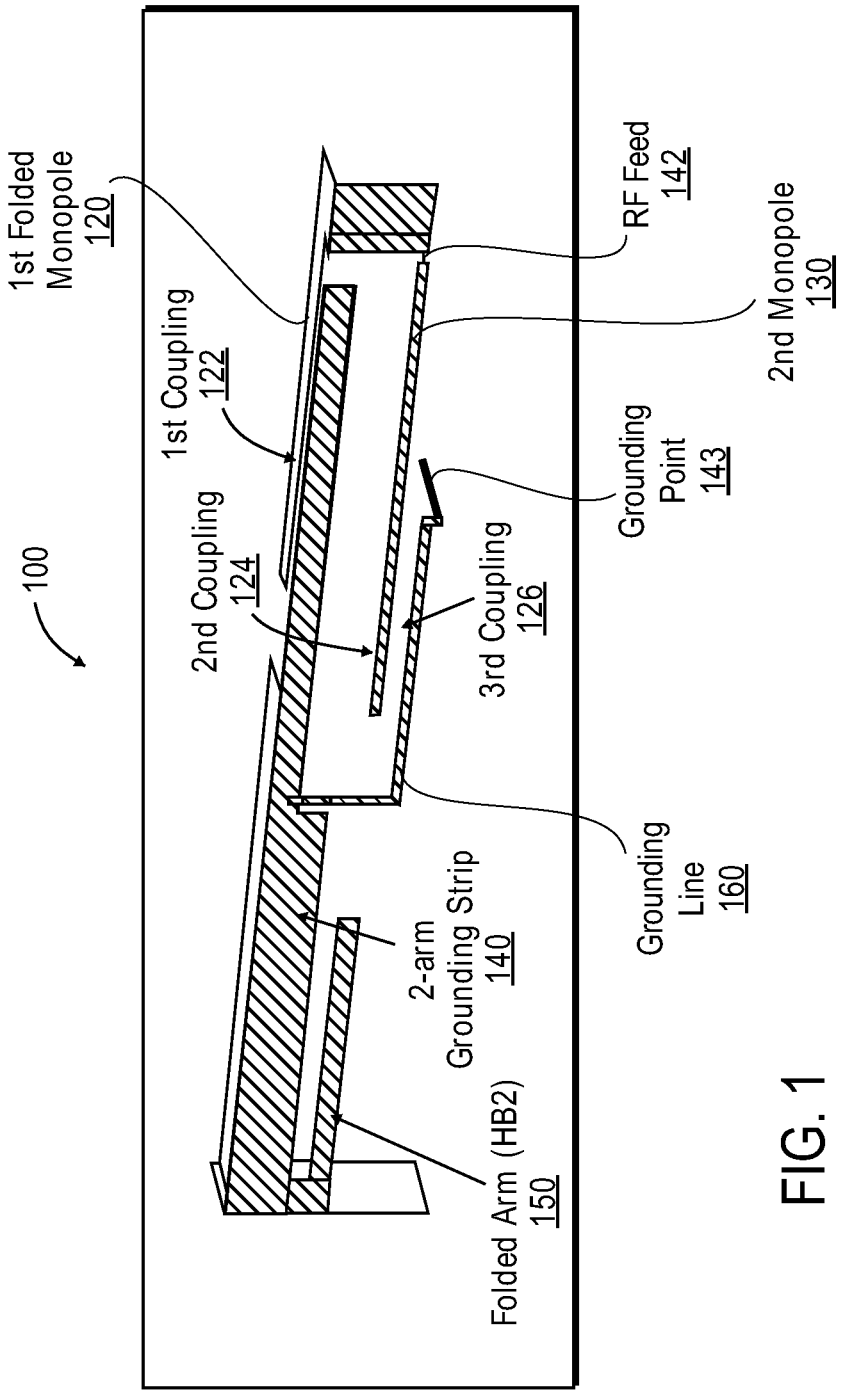
100
1st Folded Monopole 120
1st Coupling 122
2nd Coupling 124
3rd Coupling 126
RF Feed 142
2nd Monopole 130
Grounding Point 143
Grounding Line 160
2-arm Grounding Strip 140
Folded Arm (HB2) 150

FIG. 1

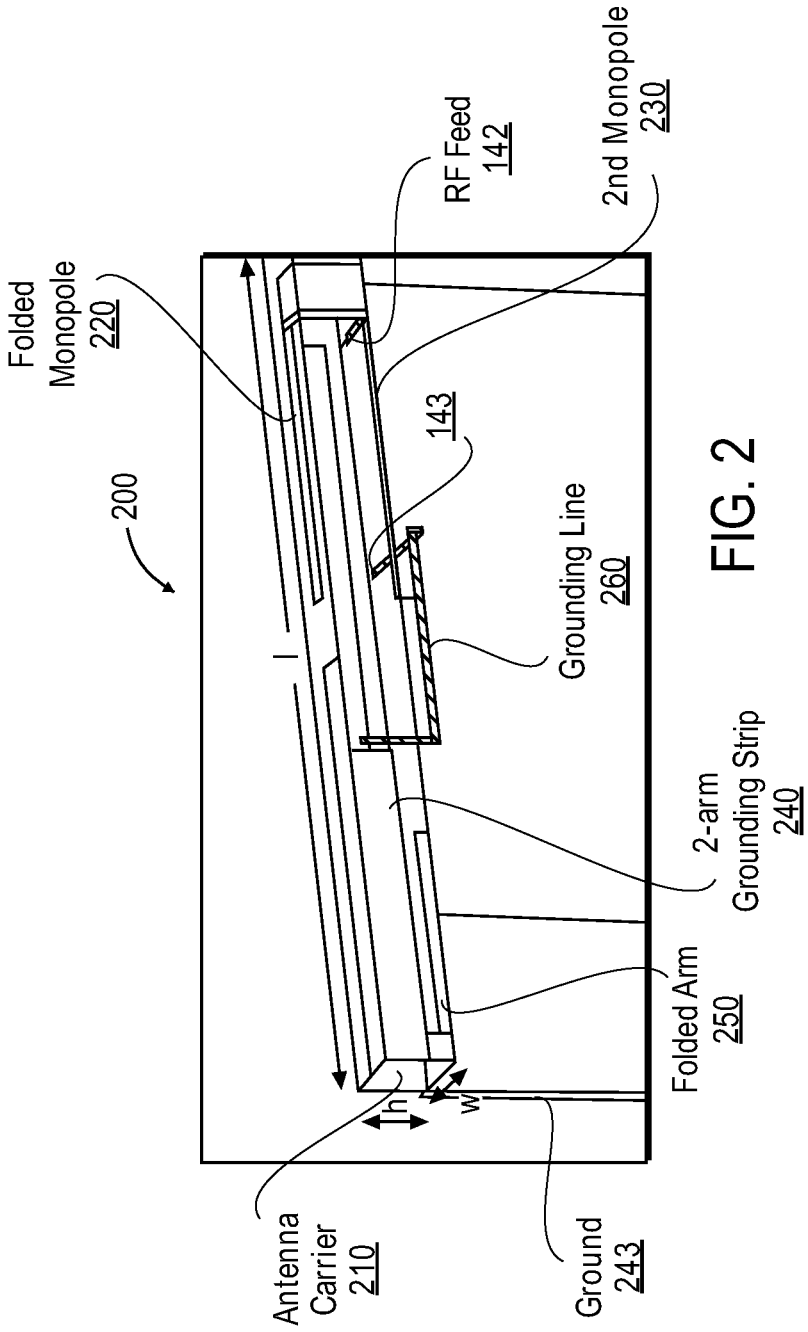
200
Folded Monopole 220
RF Feed 142
2nd Monopole 230
143
l
Grounding Line 260
2-arm Grounding Strip 240
Folded Arm 250
h
w
Antenna Carrier 210
Ground 243

FIG. 2

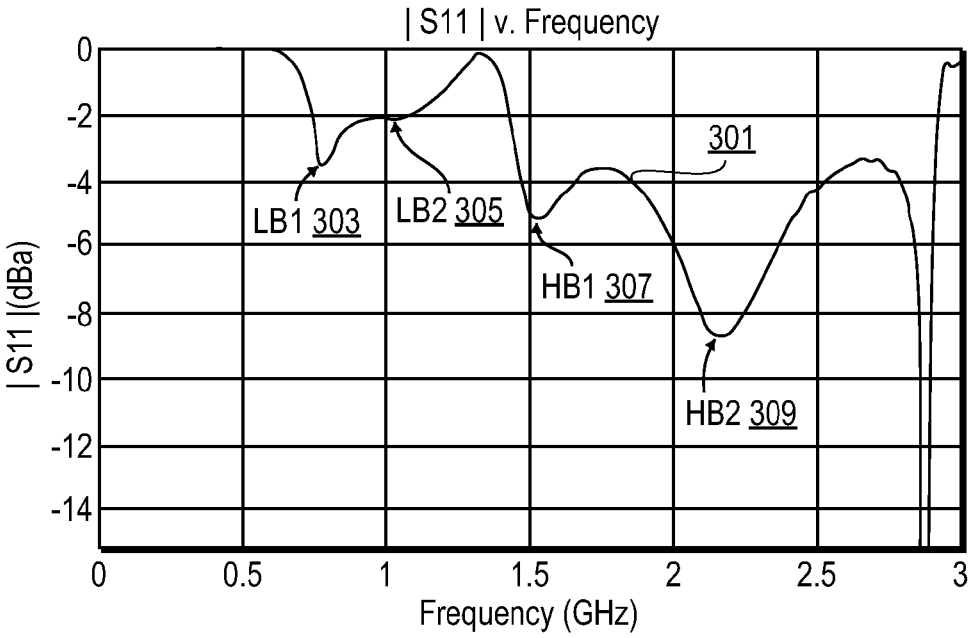
| S11 | v. Frequency
0
-2
-4
-6
-8
-10
-12
-14
| S11 |(dBa)
0
0.5
1
1.5
2
2.5
3
Frequency (GHz)
301
LB1 303
LB2 305
HB1 307
HB2 309

FIG. 3

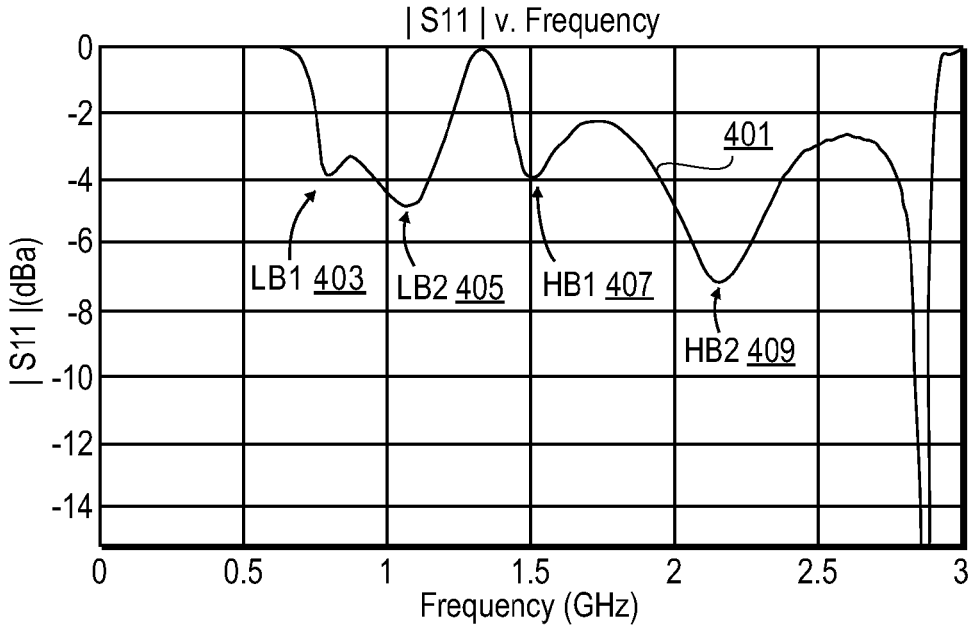
| S11 | v. Frequency
0
-2
-4
-6
-8
-10
-12
-14
| S11 |(dBa)
0
0.5
1
1.5
2
2.5
3
Frequency (GHz)
401
LB1 403
LB2 405
HB1 407
HB2 409

FIG. 4

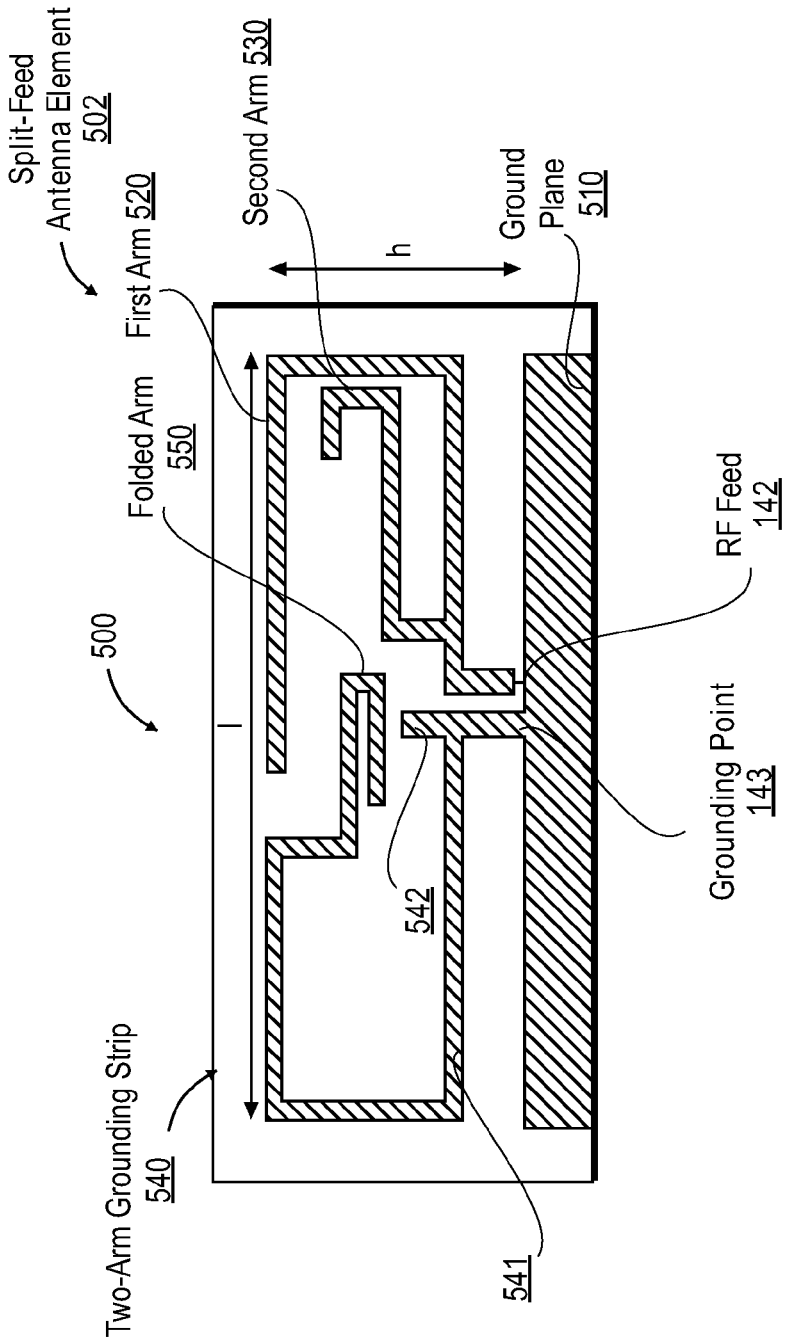
Split-Feed Antenna Element 502
500
First Arm 520
Folded Arm 550
Second Arm 530
h
Ground Plane 510
l
RF Feed 142
Grounding Point 143
542
541
Two-Arm Grounding Strip 540

FIG. 5

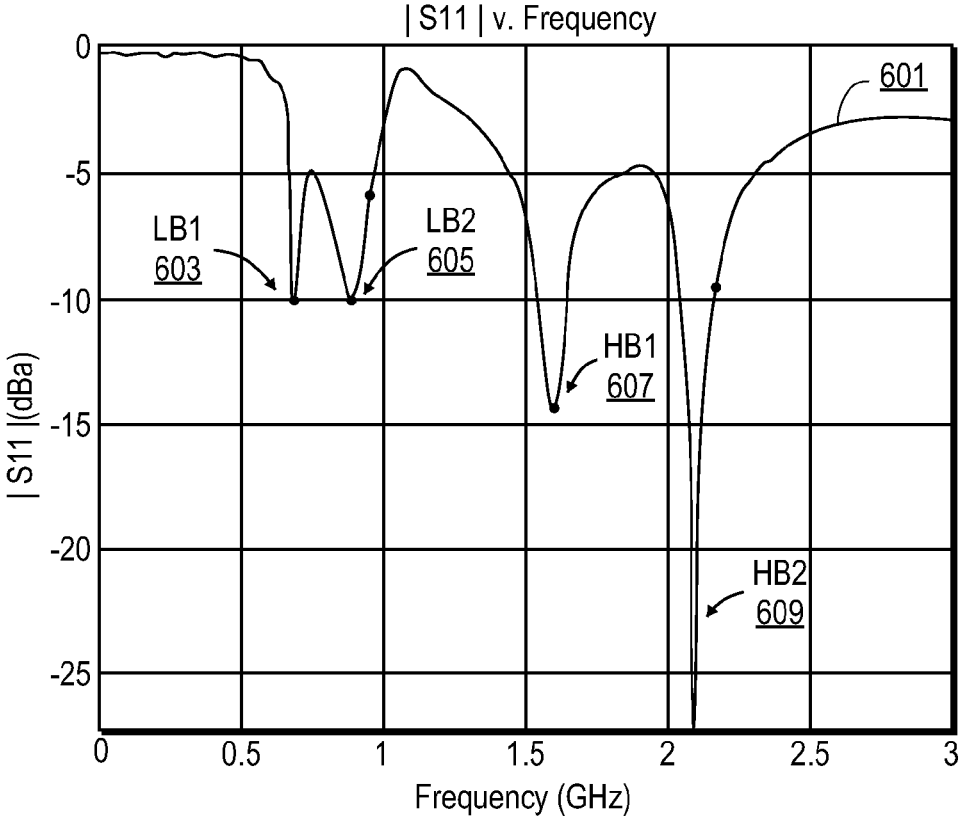
| S11 | v. Frequency
0
-5
-10
-15
-20
-25
| S11 |(dBa)
0
0.5
1
1.5
2
2.5
3
Frequency (GHz)
601
LB1
603
LB2
605
HB1
607
HB2
609

FIG. 6

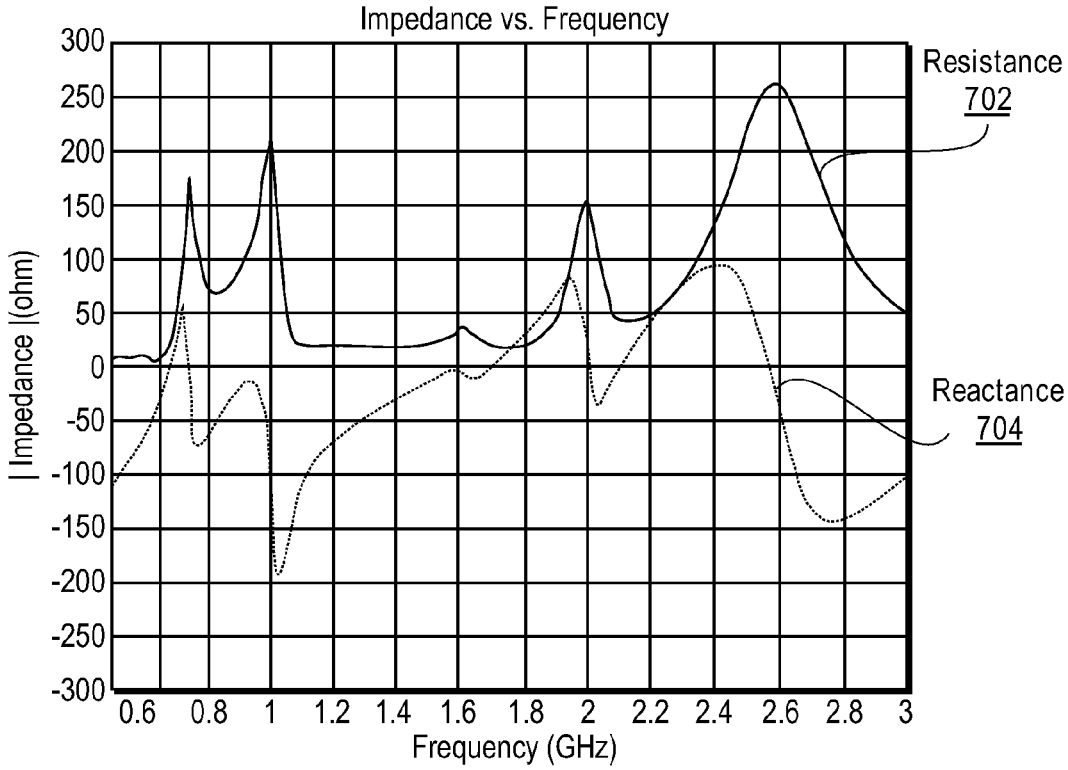
Impedance vs. Frequency
300
250
200
150
100
50
0
-50
-100
-150
-200
-250
-300
| Impedance |(ohm)
0.6
0.8
1
1.2
1.4
1.6
1.8
2
2.2
2.4
2.6
2.8
3
Frequency (GHz)
Resistance
702
Reactance
704

FIG. 7

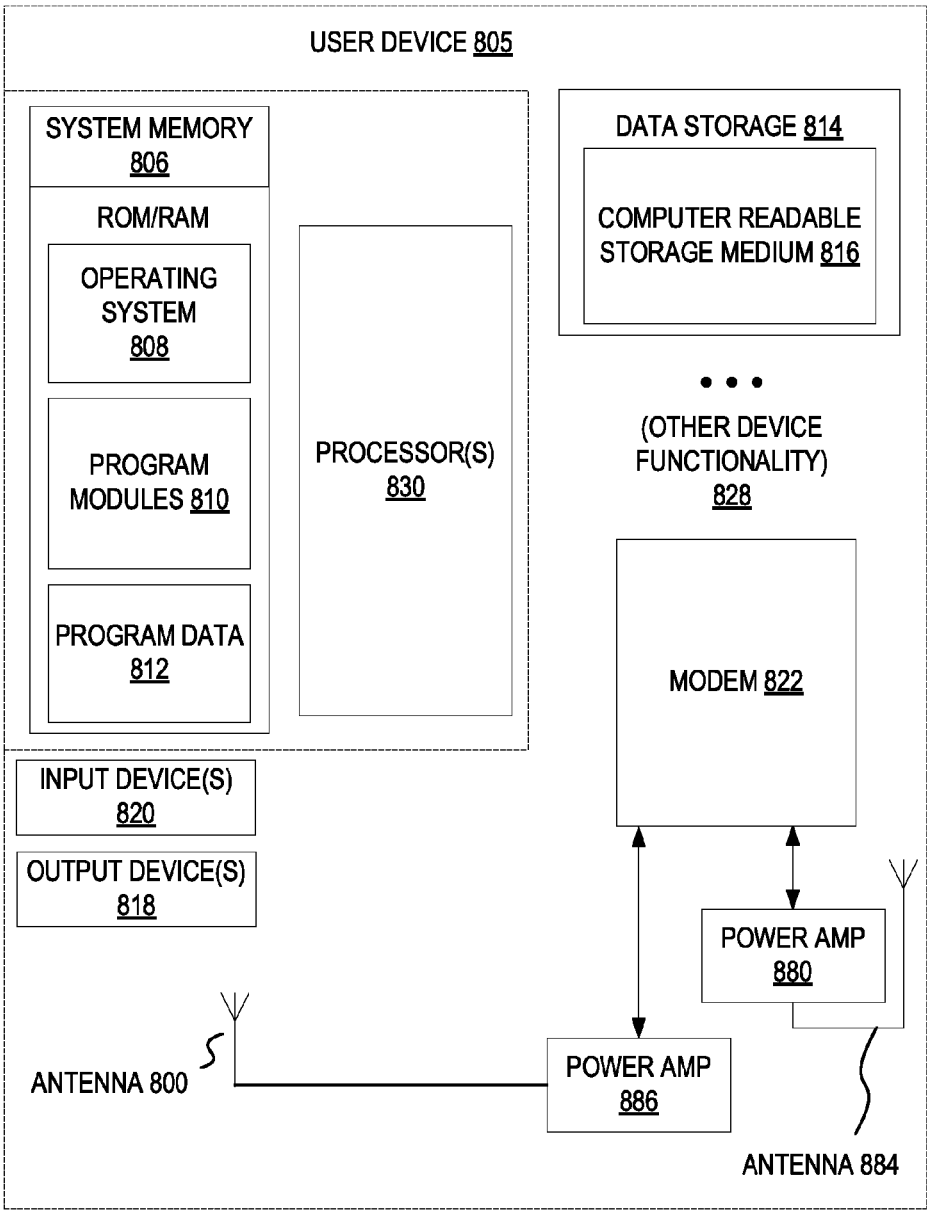
USER DEVICE 805
SYSTEM MEMORY 806
ROM/RAM
OPERATING SYSTEM 808
PROGRAM MODULES 810
PROGRAM DATA 812
PROCESSOR(S) 830
DATA STORAGE 814
COMPUTER READABLE STORAGE MEDIUM 816
(OTHER DEVICE FUNCTIONALITY) 828
MODEM 822
INPUT DEVICE(S) 820
OUTPUT DEVICE(S) 818
POWER AMP 880
ANTENNA 800
POWER AMP 886
ANTENNA 884

FIG. 8

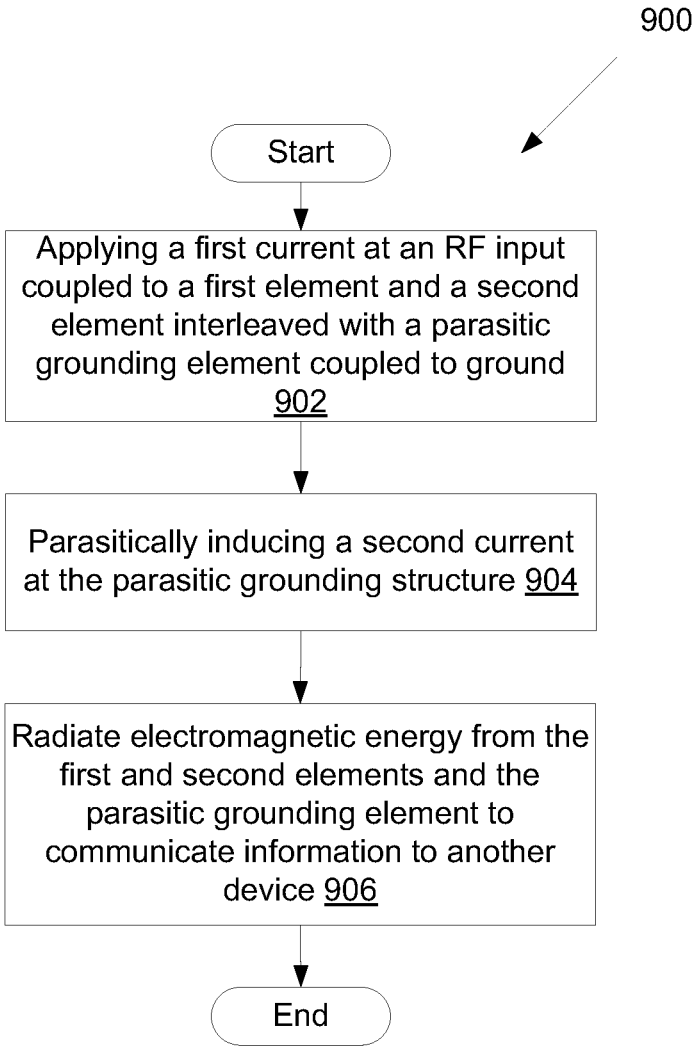
900
Start
Applying a first current at an RF input coupled to a first element and a second element interleaved with a parasitic grounding element coupled to ground 902
Parasitically inducing a second current at the parasitic grounding structure 904
Radiate electromagnetic energy from the first and second elements and the parasitic grounding element to communicate information to another device 906
End

FIG. 9

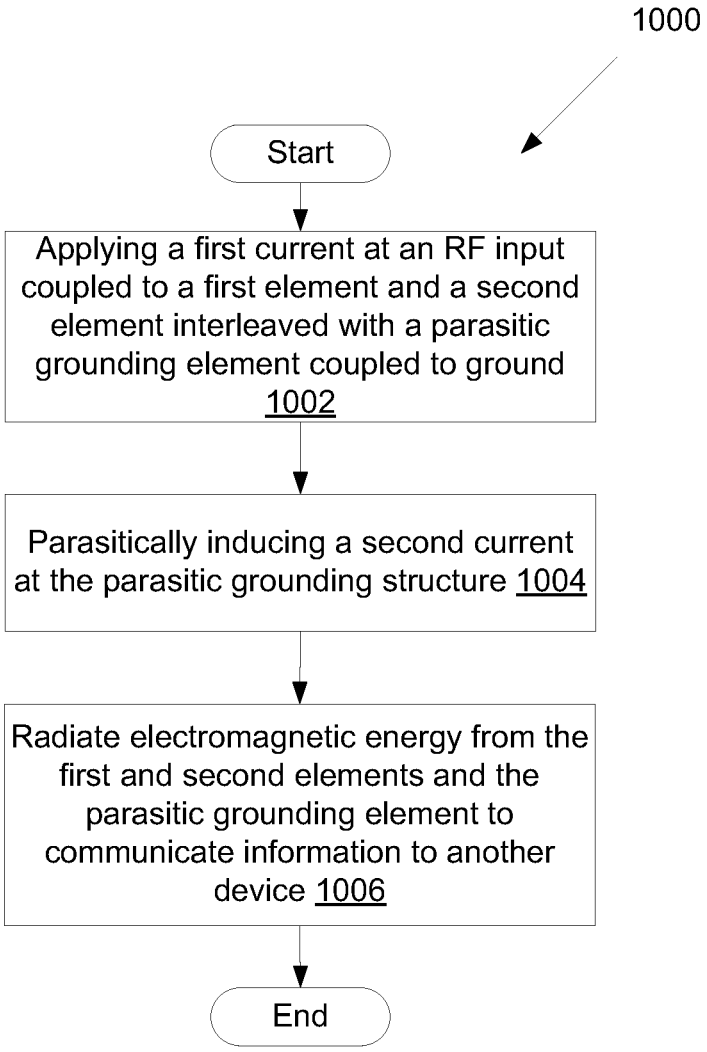
1000
Start
Applying a first current at an RF input coupled to a first element and a second element interleaved with a parasitic grounding element coupled to ground 1002
Parasitically inducing a second current at the parasitic grounding structure 1004
Radiate electromagnetic energy from the first and second elements and the parasitic grounding element to communicate information to another device 1006
End

FIG. 10

ANTENNA STRUCTURE WITH STRONGLY COUPLED GROUNDING ELEMENT

RELATED APPLICATIONS

This application is a continuation of U.S. patent application Ser. No. 13/626,404, filed Sep. 25, 2012 which is herein incorporated by reference. This application is related to co-pending application U.S. Ser. No. 13/626,403, filed Sep. 25, 2012, and the entire contents of which are incorporated herein by reference.

BACKGROUND

A large and growing population of users is enjoying entertainment through the consumption of digital media items, such as music, movies, images, electronic books, and so on. The users employ various electronic devices to consume such media items. Among these electronic devices (referred to herein as user devices) are electronic book readers, cellular telephones, personal digital assistants (PDAs), portable media players, tablet computers, netbooks, laptops and the like. These electronic devices wirelessly communicate with a communications infrastructure to enable the consumption of the digital media items. In order to wirelessly communicate with other devices, these electronic devices include one or more antennas.

The conventional antenna usually has only one resonant mode in the lower frequency band and one resonant mode in the high band. One resonant mode in the lower frequency band and one resonant mode in the high band may be sufficient to cover the required frequency band in some scenarios, such as in 3G applications. 3G, or 3rd generation mobile telecommunication, is a generation of standards for mobile phones and mobile telecommunication services fulfilling the International Mobile Telecommunications-2000 (IMT-2000) specifications by the International Telecommunication Union. Application services include wide-area wireless voice telephone, mobile Internet access, video calls and mobile TV, all in a mobile environment. The required frequency bands for 3G applications may be GSM850/EGSM in low band and DCS/PCS/WCDMA in high band. The 3G band is between 824 MHz and 960 MHz. Long Term Evolution (LTE) and LTE Advanced (sometimes generally referred to as 4G) are communication standards that have been standardized by the 3rd Generation Partnership Project (3GPP). However, in order to extend the frequency coverage down to 700 MHz for 4G/LTE application, antenna bandwidth needs to be increased especially in the low band. There are two common LTE bands used in the United States from 704 MHz-746 MHz (Band 17) and from 746 MHz-787 MHz (Band 13). Conventional solutions increase the antenna size or use active tuning elements to extend the bandwidth. Alternatively, conventional solutions use separate antennas to achieve different frequency bands and use a switch to switch between the antennas. These solutions are not conducive to use in user devices, often because of the size of the available space for antennas within the device.

BRIEF DESCRIPTION OF THE DRAWINGS

The present invention will be understood more fully from the detailed description given below and from the accompanying drawings of various embodiments of the present invention, which, however, should not be taken to limit the present invention to the specific embodiments, but are for explanation and understanding only.

FIG. **1** illustrates one embodiment of an antenna structure including a two-arm grounding strip interleaved with antenna elements coupled to a radio frequency (RF) feed.

FIG. **2** illustrates another embodiment of an antenna structure including a two-arm grounding strip interleaved with antenna elements coupled to a RF feed.

FIG. **3** is a graph of measured reflection coefficient of the antenna structure of FIG. **1** according to one embodiment.

FIG. **4** is a graph of measured reflection coefficient of the antenna structure of FIG. **2** according to one embodiment.

FIG. **5** illustrates one embodiment of an antenna structure including a split-feed antenna element and a parasitic grounding element.

FIG. **6** is a graph of measured reflection coefficient of the antenna structure of FIG. **5** according to one embodiment.

FIG. **7** is a graph of an impedance profile of the antenna structure of FIG. **5** according to one embodiment.

FIG. **8** is a block diagram of a user device having one of the antenna structures described herein according to one embodiment.

FIG. **9** is a flow diagram of an embodiment of a method of operating a user device having an antenna structure of FIG. **1** according to one embodiment.

FIG. **10** is a flow diagram of an embodiment of a method of operating a user device having an antenna structure of FIG. **5** according to one embodiment.

DETAILED DESCRIPTION

Antenna structures of user devices and methods of operating the user devices with the antenna structures are described. One apparatus includes a RF feed coupled to a first element and a second element of an antenna structure. The antenna structure also includes a parasitic grounding element coupled to a ground plane and is interleaved with the first element and second element to form at least a dual coupling with respect to the RF feed. The first element and second element are configured to operate as a feeding structure to a parasitic grounding element that is not conductively connected to the RF feed. The antenna structure has an RF feed that drives the first element and the second element as active or driven elements and the parasitic grounding element is a parasitic element that is fed by the first and second elements. By parasitically coupling the first and second elements with the parasitic grounding element, multiple resonant modes can be created in the low band and in the high band.

Another apparatus includes a RF feed coupled to a split-feed antenna element of an antenna structure. The antenna structure also includes a parasitic grounding element coupled to a ground plane. The split-feed antenna element is configured to operate as a feeding structure to the parasitic grounding element that is not conductively connected to the RF feed. The split-feed antenna element is a feeding structure because it is the element that parasitically induces current on the parasitic grounding element, since it is not conductively connected to the RF feed.

The user device may be any content rendering device that includes a wireless modem for connecting the user device to a network. Examples of such user devices include electronic book readers, portable digital assistants, mobile phones, laptop computers, portable media players, tablet computers, cameras, video cameras, netbooks, notebooks, desktop computers, gaming consoles, DVD players, media centers, and the like. The user device may connect to a network to obtain content from a server computing system (e.g., an item pro-

viding system) or to perform other activities. The user device may connect to one or more different types of cellular networks.

As described above, the conventional antenna usually has only one resonant mode in the lower frequency band and one resonant mode in the high band. The embodiments described herein extend the bandwidth by using the antenna structures described herein. In one embodiment, one of the antenna structures is configured to operate between 700 MHz and 960 MHz in a low band and between 1.71 and 2.7 GHz in a high band. In one embodiment, another one of the antenna structures is configured to operate between 700 MHz and 960 MHz in a low band and between 1.71 and 2.17 GHz in a high band. In other embodiments, the antenna structure is configured to operating in one or more of the following frequency bands Long Term Evolution (LTE) 700, LTE 2700, Universal Mobile Telecommunications System (UMTS) and Global System for Mobile Communications (GSM) 850, GSM 900, GSM 1800 and GSM 1900. The antenna structure may provide multiple resonant modes, for example, a first low-band mode, a second low-band mode, a first high-band mode, and a second high-band mode.

The embodiments described herein are not limited to use in 3G and LTE bands, but could be used to increase the bandwidth of a multi-band frequency in other bands, such as Dual-band Wi-Fi, GPS, cellular, and Bluetooth frequency bands as described herein. The embodiments described herein provide an antenna structure to be coupled to a single RF feed and does not use any active tuning to achieve the extended bandwidths. The embodiments described herein also provide an antenna structure with a size that is conducive to being used in a user device.

FIG. **1** illustrates one embodiment of an antenna structure **100** including a two-arm grounding strip **140** interleaved with antenna elements **120**, **130** coupled to a radio frequency (RF) feed **142**. In this embodiment, the antenna structure **100** is fed at the RF feed **142**, which is coupled to a first folded monopole element **120** and a second monopole element **130**. The two-arm grounding strip **140** is a parasitic grounding element. A parasitic element is an element of the antenna structure **100** that is not driven directly by the single RF feed **142**. Rather, the single RF feed **142** directly drives the antenna elements **120**, **130** of the antenna structure, which parasitically induces a current on the parasitic element. In particular, by directly inducing current on the first folded monopole element **120** and the second monopole element **130** by the single RF feed **142**, the directly-fed structures radiates electromagnetic energy, which causes another current on the two-arm grounding strip **140** to also radiate electromagnetic energy, creating multiple resonant modes. In the depicted embodiment, the two-arm grounding strip **140** is parasitic because it is physically separated from the first folded monopole element **120** that is driven at the single RF feed **142**. It can also be said that the parasitic element **130** is not conductively connected to the RF feed **142**. The driven first folded monopole element **120** and driven second monopole element **130** parasitically excite the current flow of the two-arm grounding strip **140**. In one embodiment, the two-arm grounding strip **140** can be physically separated by a gap between the first folded monopole element **120** and the second monopole element **130**. Alternatively, other antenna configurations may be used to include driven antenna elements and a parasitic grounding element.

In the depicted embodiment, the antenna structure **100** also includes a meandering ground line **160** that couples the two-arm ground strip **140** to the ground plane at a grounding point **143**. The meandering ground line **160** and a first arm of the two-arm grounding strip **140** are interleaved with the first folded monopole element **120** and the second monopole element **130**. Three parts in this antenna structure **100** provide strong coupling. The first folded monopole element **120** is disposed in relation to the first arm of the two-arm grounding strip **140** to form a first coupling of the antenna structure **100**. The second monopole element **130** is disposed in relation to the first arm of the two-arm grounding strip **140** to form a second coupling of the antenna structure **100**. The second monopole element **130** is also disposed in relation to the meandering ground line **160** to form a third coupling of the antenna structure **100**. Each coupling has a different effect on all resonance modes of the antenna structure **100**, such as a first low-band (LB1) mode, a second low-band (LB2) mode, a first high-band (HB1) mode, and a second high-band (HB2) mode. With this triple-coupling tuning factor, it provides even more tuning dimensions for the resonance excitation other than the tuning the length of different arms only. Also, the strong coupling may allow the antenna structure **100** to be a very slim design, such as between 3 and 5 mm in height and between 3 and 5 mm in width. Also, the antenna structure **100** allows for total coverage by the ground plane underneath the antenna structure **100** with some distance between the ground plane and the two-arm grounding strip **140**. It should be noted that in other embodiments, the antenna structure **100** can be configured to have a dual coupling with respect to the RF feed.

In a further embodiment, the antenna structure **100** also includes a folded arm **150** coupled to a distal end of a second arm of the two-arm grounding strip **140**. The distal end is the end that is farthest from the RF feed.

In FIG. **1**, the ground may be a radiation ground plane (not illustrated in FIG. **1**). The RF feed **142** may be a feed line connector that couples the antenna structure **100** to a feed line (also referred to as the transmission line), which is a physical connection that carriers the RF signal to and/or from the antenna structure **100**. The feed line connector may be any one of the three common types of feed lines, including coaxial feed lines, twin-lead lines or waveguides. A waveguide, in particular, is a hollow metallic conductor with a circular or square cross-section, in which the RF signal travels along the inside of the hollow metallic conductor. Alternatively, other types of connectors can be used. In the depicted embodiment, the feed line connector is directly connected to first folded monopole element **120** and the second monopole element **130** of the antenna structure **100**, but is not conductively connected to the two-arm grounding strip **140** of the antenna structure **100**. However, the first folded monopole element **120** and the second monopole element **130** is configured to operate as a feeding structure to the two-arm grounding strip **140**.

In one embodiment, the antenna structure **100** is disposed on an antenna carrier, such as described below with respect to FIG. **2**. In another embodiment, portions of the antenna structure **100** may be disposed on or within a circuit board, such as a printed circuit board (PCB). Alternatively, the antenna structure **100** may be disposed on other components of the user device or within the user device as would be appreciated by one of ordinary skill in the art having the benefit of this disclosure. It should be noted that the antenna structure **100** illustrated in FIG. **1** is a three-dimensional (3D) structure. However, as described herein, the antenna structure **100** may be a planar, two-dimensional (2D), as well as other variations than those depicted in FIG. **1**. In one embodiment, the two-arm grounding strip **140**, the first folded monopole element **120**, the second monopole element **130**, or any combination thereof can be partially disposed on two or more sides of the antenna carrier. For example, the two-arm grounding strip

140 can be disposed on the front surface and the top surface of the antenna carrier. The first folded monopole element 120 can be disposed on the front surface and the top surface of the antenna carrier. The second folded monopole element 130 can be disposed on the front surface of the antenna carrier. Similarly, portions of these elements can be disposed on sides of the antenna carrier as would be appreciated by one of ordinary skill in the art having the benefit of this disclosure.

The antenna structure 100 is configured to provide multiple resonant modes, including a LB1, LB2, HB1 and HB2. In the depicted embodiment, the antenna structure 100 is configured to operate between 700 MHz and 960 MHz in a low band and between 1.71 and 2.7 GHz in a high band. This allows the antenna structure 100 to operate in one or more of the following frequency bands: LTE 700, LTE 2700, UMTS, GSM 850, GSM 900, GSM 1800 and GSM 1900. In a further embodiment, the antenna structure 100 is configured to operate in additional frequency bands, such as Global Positioning System (GPS), wireless local area network (WLAN) (e.g., Wi-Fi), personal area network (PAN), or any combination thereof. Using the first folded monopole element 120, the second monopole element 130, and the two-arm grounding strip 140, the antenna structure 100 can create multiple resonant modes using the single RF feed 142, such as three or more resonant modes. In one embodiment, the first folded monopole element 120, second monopole element 130, and two-arm grounding strip 140 are configured to extend a bandwidth of the antenna structure 100. In one embodiment, the antenna structure 100 has multiple resonant modes with frequencies between 700 MHz and 2.7 GHz. In one embodiment, the first folded monopole element 120 and the second monopole element 130 are configured to provide a first resonant mode, centered at 700 MHz, a second resonate mode, centered at 900 MHz and a third resonant mode, centered at 2200 MHz. Whilst, the two-arm grounding strip 140 is configured to provide a fourth resonant mode, centered at 1.5 GHz. In another embodiment, the antenna structure 100 can be configured to create a resonant mode for LTE 700 plus resonant modes for penta-band. In telecommunications, the terms multi-band, dual-band, tri-band, quad-band, and penta-band refer to a device, such as the user device described herein, supporting multiple RF bands used for communication. In other embodiments, the antennas can be designed to cover multiple bands, including LTE/GSM/UMTS, the GSM850/900/1800/1900/UMTS penta-band operation, or the LTE700/GSM850/900 (698-960 MHz) and GSM 1800/1900/UMTS/LTE2300/2500 (1710-2690) MHz operation. In the user device context, the purpose of doing so is to support roaming between different regions whose infrastructure cannot support mobile services in the same frequency range. These frequency bands may be UMTS frequency bands, GSM frequency bands, or other frequency bands used in different communication technologies, such as, for example, cellular digital packet data (CDPD), general packet radio service (GPRS), enhanced data rates for GSM evolution (EDGE), 1 times radio transmission technology (1×RTT), evaluation data optimized (EVDO), high-speed downlink packet access (HSDPA), Wi-Fi, WiMax, etc.

The dimensions of the antenna structure 100 may be varied to achieve the desired frequency range as would be appreciated by one of ordinary skill in the art having the benefit of this disclosure, however, the total lengths of the antenna elements are a major factor for determining the frequency, and the widths of the antenna elements are a factor for impedance matching. It should be noted that the factors of total length and width are dependent on one another.

In the depicted embodiment, the first folded monopole element 120 includes a first portion that is coupled to the RF feed 142 at a bottom side of the antenna carrier and extends away from the RF feed 142, and wraps around a front side of the antenna carrier onto a top side of the antenna carrier. The first folded monopole element 120 includes a second portion that extends along the top side of the antenna carrier. The first portion and the second portion form a folded monopole element. In a further embodiment, the second monopole element 130 extends along the front side of the antenna carrier in a same direction as the second portion.

In a further embodiment, the two-arm grounding strip 140 includes a first arm that extends from where the meandering ground line 160 couples to the two-arm grounding strip 140 along the front side of the antenna carrier towards the RF feed 142. The first arm is interleaved with the first portion of the first folded monopole element 120 and the second monopole element 130. The two-arm grounding strip 140 includes a second arm that extends away from the where the meandering ground line 160 couples to the two-arm grounding strip 140 and wraps around at least the front side and the top side of the antenna carrier. In the depicted embodiment, the two-arm grounding strip 140 also includes a folded arm coupled to a distal end of the second arm that extends towards a bottom of the front side of the antenna carrier, and turns to extend along the front side of the antenna carrier towards the meandering ground line 160. The two-arm grounding strip 140 also includes a portion that is disposed on a side that extends below the folded arm 150 on the left side.

In another embodiment, the first folded monopole element 120 includes a first line having a path with one or more bends, and the second monopole element 130 includes a second line without any bends. In other embodiments, the antenna elements 120 and 130 may be folded monopoles, monopoles, or any combination thereof. In one embodiment, the first folded monopole element 120, second monopole element 130, and the two-arm grounding strip 140 are coplanar.

In another embodiment, the antenna structure includes a first element and a second element, each coupled to the RF feed 142. A parasitic grounding element is coupled to the ground plane and is disposed to interleave with the first element and the second element to form at least a dual coupling with respect to the RF feed. In another embodiment, the parasitic grounding element is coupled to a meandering ground line to form a third coupling with respect to the RF feed. The parasitic grounding element may be the two-arm grounding strip 140, but may also be other types of structures that includes section that interleave or otherwise create a coupling between the first elements and second element and the parasitic grounding element. The first element may be the first folded monopole element 120 or may have other shapes and dimensions as would be appreciated by one of ordinary skill in the art having the benefit of this disclosure. The second element may be the second monopole element 130 or may have other shapes and dimensions as would be appreciated by one of ordinary skill in the art having the benefit of this disclosure.

FIG. 2 illustrates another embodiment of an antenna structure 200 including a two-arm grounding strip 240 interleaved with antenna elements 220, 230 coupled to a RF feed 142. In this embodiment, the antenna structure 200 is fed at the RF feed 142, which is coupled to a first folded monopole element 220 and a second monopole element 230. The first folded monopole element 220 is similar to the first folded monopole element 120 and the second monopole element 230 is similar to the second monopole element 130. A two-arm grounding strip 240 is a parasitic grounding element similar to the two-

arm grounding strip **140** except as noted below. The antenna structure **200** also includes a meandering ground line **260** similar to the meandering ground line **160** that couples the two-arm ground strip **240** to the ground plane at a grounding point **143**. The meandering ground line **260** and a first arm of the two-arm grounding strip **240** are interleaved with the first folded monopole element **220** and the second monopole element **230**. The antenna structure **200** also includes a folded arm **250** coupled to a distal end of a second arm of the two-arm grounding strip **240**.

Like the antenna structure **100**, three parts in this antenna structure **200** provide strong coupling. The coupling allows for tuning, as well as impedance matching. Each coupling has a different effect on all resonance modes of the antenna structure **200**, such as a first low-band (LB1) mode, a second low-band (LB2) mode, a first high-band (HB1) mode, and a second high-band (HB2) mode. With this triple-coupling tuning factor, it provides even more tuning dimensions for the resonance excitation other than the tuning the length of different arms only. Also, the strong coupling may allow the antenna structure **200** to be a very slim design, such as between 3 and 5 mm in height and between 3 and 5 mm in width. Also, the antenna structure **200** allows for total coverage by the ground plane underneath the antenna structure. It should be noted that in other embodiments, the antenna structure **200** can be configured to have a dual coupling with respect to the RF feed, instead of triple coupling as depicted.

In FIG. **2**, the ground is a radiation ground plane **243**. The ground plane **243** may be a metal frame of the user device. The ground plane **243** may be a system ground or one of multiple grounds of the user device. In the depicted embodiment, the antenna structure **200** is disposed on an antenna carrier **210**, such as a dielectric carrier of the user device. The antenna carrier **210** may be any non-conductive material, such as dielectric material, upon which the conductive material of the antenna structure **200** can be disposed without making electrical contact with other metal of the user device. In another embodiment, portions of the antenna structure **200** may be disposed on or within a circuit board, such as a PCB. Alternatively, the antenna structure **200** may be disposed on other components of the user device or within the user device as would be appreciated by one of ordinary skill in the art having the benefit of this disclosure. It should be noted that the antenna structure **200** illustrated in FIG. **2** is a three-dimensional (3D) structure, but may be 2D as well. The two-arm grounding strip **240**, the first folded monopole element **220**, the second monopole element **230**, or any combination thereof can be partially disposed on two or more sides of the antenna carrier **210**. For example, the two-arm grounding strip **240** can be disposed on the front surface and the top surface of the antenna carrier **210**. The first folded monopole element **220** can be disposed on the front surface and the top surface of the antenna carrier. The second folded monopole element **230** can be disposed on the front surface of the antenna carrier. Similarly, portions of these elements can be disposed on sides of the antenna carrier as would be appreciated by one of ordinary skill in the art having the benefit of this disclosure.

The antenna structure **200** is configured to provide multiple resonant modes and operate in similar frequency bands as the antenna structure **100**.

In one embodiment, a height of the antenna structure **200** is between 3 millimeters (mm) and 5 mm and a width of the antenna structure **200** is between 3 and 5 mm. In a further embodiment, a length of the antenna structure **200** is between 30 mm and 60 mm. The dimensions of the antenna structure **200** may be varied to achieve the desired frequency range as would be appreciated by one of ordinary skill in the art having the benefit of this disclosure.

In the depicted embodiment, the first folded monopole element **220** includes a first portion that is coupled to the RF feed **142** at a bottom side of the antenna carrier **210** and extends away from the RF feed **142**, and wraps around a front side of the antenna carrier **210** onto a top side of the antenna carrier **210**. The first folded monopole element **220** includes a second portion that extends along the top side of the antenna carrier **210**. The first portion and the second portion form a folded monopole element. In a further embodiment, the second monopole element **230** extends along the front side of the antenna carrier **210** in a same direction as the second portion.

In a further embodiment, the two-arm grounding strip **240** includes a first arm that extends from where the meandering ground line **260** couples to the two-arm grounding strip **240** along the front side of the antenna carrier **210** towards the RF feed **142**. The first arm is interleaved with the first portion of the first folded monopole element **220** and the second monopole element **230**. The two-arm grounding strip **240** includes a second arm that extends away from the where the meandering ground line **260** couples to the two-arm grounding strip **240** and wraps around at least the front side and the top side of the antenna carrier **210**. In the depicted embodiment, the two-arm grounding strip **240** also includes a folded arm **250** coupled to a distal end of the second arm that extends towards a bottom of the front side of the antenna carrier **210**, and folds to extend along the front side of the antenna carrier **210** towards the meandering ground line **260**. Unlike the two-arm grounding strip **140**, the two-arm grounding strip **240** does not have a portion on the left side of the antenna carrier **210**. In one embodiment, the ground plane **243** can be disposed where the antenna carrier **210** is disposed just above the ground plane **243**. In another embodiment, the ground plane **243** can be disposed so that the antenna carrier **210** is covered by the ground plane **243** on the backside.

FIG. **3** is a graph **300** of measured reflection coefficient of the antenna structure **100** of FIG. **1** according to one embodiment. The graph **300** shows the measured reflection coefficient (also referred to S-parameter or |S11|) **301** of the antenna structure **100** of FIG. **1**. The antenna structure **100** covers approximately 700 MHz to 960 MHz in a low band and 1.71 GHz to 2.7 GHz in a high band. The antenna structure **100** provides four resonant modes, including a LB1 **303**, LB2 **305**, HB1 **307** and HB2 **309**. LB1 **303** is approximately at 700 MHz. LB2 **305** is approximately at 1 GHz. HB1 **307** is approximately at 1.5 GHz. HB2 **309** is approximately at 2.2 GHz. As described herein, other resonant modes may be achieved.

In other embodiments, more or less than three or four resonant modes may be achieved as would be appreciated by one of ordinary skill in the art having the benefit of this disclosure. It should also be noted that the first, second, third, fourth and fifth notations on the resonant modes are not be strictly interpreted to being assigned to a particular frequency, frequency range, or elements of the antenna structure. Rather, the first, second, third, fourth and fifth notations are used for ease of description. However, in some instances, the first, second, third fourth and fifth are used to designate the order from lowest to highest frequencies. Alternatively, other orders may be achieved as would be appreciated by one of ordinary skill in the art having the benefit of this disclosure. In one embodiment, the antenna structure **100** can be configured for the LTE (700/2600), UMTS, GSM (850, 800, 1800 and 1900), GPS and Wi-Fi/Bluetooth frequency bands. In effect, the antenna structure **100** has frequencies between 700 MHz

to 2.7 GHz. Conventional multiband antennas for mobile devices usually have a narrow bandwidth and can only cover 824 MHz to 960 MHz and 1710 MHz to 2170 MHz. Using the embodiments described herein with the antenna structure, low impedance variation is feasible over 700 MHz to 2.7 GHz frequency range. Hence, the embodiments described herein can be utilized in any application in the frequency range, like LTE (700/2600), UMTS, GSM (850, 900, 1800 and 1900), GPS and WI-FI/Bluetooth. In another embodiment, the antenna structure **100** can be designed to operate in the following target bands: 1) Verizon LTE band: 746 to 787 MHz; 2) US GSM 850: 824 to 894 MHz; 3) GSM900: 880 to 960 MHz; 4) GSM 1800/DCS: 1.71 to 1.88 GHz; 5) US1900/PCS (band 2): 1.85 to 1.99 GHz; and 6) WCDMA band I (band 1): 1.92 to 2.17 GHz. These resonance bandwidths may be characterized by VNA measurements with about 6 dB bandwidth (BW). Alternatively, the antenna structure **100** can be designed to operate in different combinations of frequency bands as would be appreciated by one of ordinary skill in the art having the benefit of this disclosure. Alternatively, the antenna structure **100** can be configured to be tuned to other frequency bands as would be appreciated by one of ordinary skill in the art having the benefit of this disclosure.

FIG. **4** is a graph **400** of measured reflection coefficient of the antenna structure **200** of FIG. **2** according to one embodiment. The graph **400** shows the measured reflection coefficient (also referred to S-parameter or |S11|) **401** of the antenna structure **200** of FIG. **2**. The antenna structure **200** covers approximately 700 MHz to 960 MHz in a low band and 1.71 GHz to 2.7 GHz in a high band. The antenna structure **200** provides four resonant modes, including a LB1 **403**, LB2 **405**, HB1 **407** and HB2 **409**. LB1 **403** is approximately at 700 MHz. LB2 **405** is approximately at 1 GHz. HB1 **407** is approximately at 1.5 GHz. HB2 **409** is approximately at 2.2 GHz. As described herein, other resonant modes may be achieved. As shown in FIG. **4**, the antenna structure **200** has a greater measured reflection coefficient for LB2 **405**, as compared to LB2 **305** of the antenna structure **100**.

FIG. **5** illustrates one embodiment of an antenna structure **500** including a split-feed antenna element **502** and a parasitic grounding element. The parasitic grounding element is a two-arm grounding strip **540** coupled to a ground plane **510** at a grounding point **143**. The split-feed antenna element **502** includes a first folded arm **520** and a second folded arm **530**. The second folded arm **530** is disposed within an area defined by at least a portion of the first folded arm. It can be said the second folded arm **530** is disposed within an inner perimeter of the first folded arm **520**. In other words, the second arm **530** is not located within the first folded arm **520**, and the first folded arm **520** is disposed at least partially around the second folded arm **530**. The split-feed antenna element **502** is configured to operate as a feeding structure to the two-arm grounding strip **540** that is not conductively connected to the RF feed **142**. It should be noted that the RF feed **142** does not connect to the ground plane **510**, rather the RF feed **142** is electrically isolated from the ground plane **510**. For example, if the ground plane **510** is the ground plane of a circuit board, the ground plan **510** may be on the back side of the circuit board and the RF feed **142** can be on the top side of the circuit board.

In the depicted embodiment, the first folded arm **520** includes a first section that extends from the RF feed **142** in a first direction until a first bend, extends in a second direction until a second bend, extends in a third direction until a third bend and extends in a fourth direction. The second folded arm **530** extends out from the first folded arm **520** between the first and second bends until a fourth bend, extends in the same second direction as the first folded arm **520** until a fifth bend, and extends in the same third direction as the first folded arm **520** until a sixth bend and extends in the same fourth direction as the first folded arm **520**.

In the depicted embodiment, the two-arm grounding strip **540** includes a third arm **542** and a fourth folded arm **541**. The third arm **542** extends out perpendicularly from the ground plane **510** in the same first direction as the first folded arm **520**. The fourth folded arm **541** extends out from the third arm **542** in an opposite direction as the second direction until a seventh bend, extends in the same third direction as the first folded arm **520** until an eighth bend, extends in the opposite direction as the fourth direction until a ninth bend, extends in the opposite direction as the first direction until a tenth bend, and extends in the same second direction as the first folded arm **520**. In a further embodiment, the antenna structure **500** includes a fifth folded arm **550** coupled to a distal end of the two-arm grounding strip **520**. It should be noted that the fifth folded arm **550** is also referred to the third folded arm in some cases when referring to the two-arm grounding strip **540** in general. The fifth folded arm **550** extends in the opposite direction as the first direction until an eleventh bend and extends in the same fourth direction as the first folded arm **520**.

The antenna structure **500** may be disposed on an antenna carrier (not illustrated). The antenna structure **500** is illustrated as being 2D; however, the antenna structure **500** may be a 3D structure as well. For example, portion of the antenna structure **500** may be wrapped over multiple sides of an antenna carrier. Alternatively, the antenna structure **500** may be disposed on other components of the user device or within the user device as would be appreciated by one of ordinary skill in the art having the benefit of this disclosure.

The antenna structure **500** is configured to provide multiple resonant modes and operate in similar frequency bands as the antenna structure **200**. The antenna structure **500** may provide a first low-band mode, a second low-band mode, a first high-band mode and a second high-band mode.

In one embodiment, a height of the antenna structure **500** is between 15 mm and 20 mm and a length of the antenna structure **500** is between 40 mm and 60 mm. The dimensions of the antenna structure **500** may be varied to achieve the desired frequency range as would be appreciated by one of ordinary skill in the art having the benefit of this disclosure. Also, as described herein, portions of the antenna structure can be wrapped around an antenna carrier so that the antenna structure is 3D, which may reduce the height, length, or any combination thereof.

FIG. **6** is a graph **600** of measured reflection coefficient of the antenna structure **500** of FIG. **5** according to one embodiment. The graph **600** shows the measured reflection coefficient (also referred to S-parameter or |S11|) **601** of the antenna structure **500** of FIG. **5**. The antenna structure **500** covers approximately 700 MHz to 960 MHz in a low band and 1.71 GHz to 2.17 GHz in a high band. The antenna structure **500** provides four resonant modes, including a LB1 **603**, LB2 **605**, HB1 **607** and HB2 **609**. LB1 **603** is approximately at 700 MHz. LB2 **605** is approximately at 850 MHz. HB1 **607** is approximately at 1.6 GHz. HB2 **609** is approximately at 2.1 GHz. As described herein, other resonant modes may be achieved. As shown in FIG. **6**, the antenna structure **500** has a greater measured reflection coefficient for LB2 **605**, as compared to LB2 **305** of the antenna structure **100**. Also, HB2 **609** is a lower frequency than HB2 **309** and HB **409** of the antenna structures **100** and **200**, respectively.

FIG. **7** is a graph **700** of an impedance profile of the antenna structure **500** of FIG. **5** according to one embodiment. The

graph **700** illustrates resistance **702** and reactance **704** over a range of frequency of the antenna structure **500**. The graph **700** illustrates that the antenna structure **500** is a viable antenna for the frequency range in a low-band between 700 MHz and 960 MHz, and in a high-band between 1.7 GHz and 2.2 GHz.

As would be appreciated by one of ordinary skill in the art having the benefit of this disclosure, the total efficiency of the antenna can be measured by including the loss of the structure and mismatch loss. The efficiency of the antenna can be tuned for specified target bands. For example, the target band can be Verizon LTE band and the GSM850/900 band, and the antenna structure **100** can be tuned to optimize the efficiency for this band as well as for other bands, such as DCS, PCS and WCDMA bands. The efficiency of the antenna structure may be optimized by adjusting dimensions of the 2D structure, the gaps between the elements of the structure, a distance between the RF feed **142** and the grounding points at the ground plane **243**, or any combination thereof. Similarly, 3D structures can be modified in dimensions and gaps between elements to improve the efficiency in certain frequency bands as would be appreciated by one of ordinary skill in the art having the benefit of this disclosure. It should also be noted that the antennas described herein may be implemented with two-dimensional geometries, as well as three-dimensional geometries as described herein.

FIG. **8** is a block diagram of a user device having an antenna **800** according to one embodiment. The antenna **800** may have one of the antenna structures described herein, such as the antenna structure **100**, antenna structure **200**, or antenna structure **500**. The user device **805** includes one or more processors **830**, such as one or more CPUs, microcontrollers, field programmable gate arrays, or other types of processing devices. The user device **805** also includes system memory **806**, which may correspond to any combination of volatile and/or non-volatile storage mechanisms. The system memory **806** stores information, which provides an operating system component **808**, various program modules **810**, program data **812**, and/or other components. The user device **805** performs functions by using the processor(s) **830** to execute instructions provided by the system memory **806**.

The user device **805** also includes a data storage device **814** that may be composed of one or more types of removable storage and/or one or more types of non-removable storage. The data storage device **814** includes a computer-readable storage medium **816** on which is stored one or more sets of instructions embodying any one or more of the functions of the user device **805**, as described herein. As shown, instructions may reside, completely or at least partially, within the computer readable storage medium **816**, system memory **806** and/or within the processor(s) **830** during execution thereof by the user device **805**, the system memory **806** and the processor(s) **830** constituting computer-readable media. The user device **805** may also include one or more input devices **820** (keyboard, mouse device, specialized selection keys, etc.) and one or more output devices **818** (displays, printers, audio output mechanisms, etc.).

The user device **805** further includes a wireless modem **822** to allow the user device **805** to communicate via a wireless network (e.g., such as provided by a wireless communication system) with other computing devices, such as remote computers, an item providing system, and so forth. The wireless modem **822** allows the user device **805** to handle both voice and non-voice communications (such as communications for text messages, multimedia messages, media downloads, web browsing, etc.) with a wireless communication system. The wireless modem **822** may provide network connectivity using any type of digital mobile network technology including, for example, cellular digital packet data (CDPD), general packet radio service (GPRS), enhanced data rates for GSM evolution (EDGE), UMTS, 1 times radio transmission technology (1×RTT), evaluation data optimized (EVDO), high-speed downlink packet access (HSDPA), Wi-Fi, etc. In other embodiments, the wireless modem **822** may communicate according to different communication types (e.g., WCDMA, GSM, LTE, CDMA, WiMax, etc.) in different cellular networks. The cellular network architecture may include multiple cells, where each cell includes a base station configured to communicate with user devices within the cell. These cells may communicate with the user devices **805** using the same frequency, different frequencies, same communication type (e.g., WCDMA, GSM, LTE, CDMA, WiMax, etc.), or different communication types. Each of the base stations may be connected to a private, a public network, or both, such as the Internet, a local area network (LAN), a public switched telephone network (PSTN), or the like, to allow the user devices **805** to communicate with other devices, such as other user devices, server computing systems, telephone devices, or the like. In addition to wirelessly connecting to a wireless communication system, the user device **805** may also wirelessly connect with other user devices. For example, user device **805** may form a wireless ad hoc (peer-to-peer) network with another user device.

The wireless modem **822** may generate signals and send these signals to power amplifier (amp) **880** or power amp **886** for amplification, after which they are wirelessly transmitted via the antenna **800** or antenna **884**, respectively. Although FIG. **8** illustrates power amps **880** and **886**, in other embodiments, a transceiver may be used to all the antennas **800** and **884** to transmit and receive. The antenna **884**, which is an optional antenna that is separate from the antenna **800**, may be any directional, omnidirectional or non-directional antenna in a different frequency band than the frequency bands of the antenna **800**. The antenna **884** may also transmit information using different wireless communication protocols than the antenna **800**. In addition to sending data, the antenna **800** and the antenna **884** also receive data, which is sent to wireless modem **822** and transferred to processor(s) **830**. It should be noted that, in other embodiments, the user device **805** may include more or less components as illustrated in the block diagram of FIG. **8**.

In one embodiment, the user device **805** establishes a first connection using a first wireless communication protocol, and a second connection using a different wireless communication protocol. The first wireless connection and second wireless connection may be active concurrently, for example, if a user device is downloading a media item from a server (e.g., via the first connection) and transferring a file to another user device (e.g., via the second connection) at the same time. Alternatively, the two connections may be active concurrently during a handoff between wireless connections to maintain an active session (e.g., for a telephone conversation). Such a handoff may be performed, for example, between a connection to a Wi-Fi hotspot and a connection to a wireless carrier system. In one embodiment, the first wireless connection is associated with a first resonant mode of the antenna **800** that operates at a first frequency band and the second wireless connection is associated with a second resonant mode of the antenna **800** that operates at a second frequency band. In another embodiment, the first wireless connection is associated with the antenna **800** and the second wireless connection is associated with the antenna **884**. In other embodiments, the first wireless connection may be associated with a media purchase application (e.g., for down-

loading electronic books), while the second wireless connection may be associated with a wireless ad hoc network application. Other applications that may be associated with one of the wireless connections include, for example, a game, a telephony application, an Internet browsing application, a file transfer application, a global positioning system (GPS) application, and so forth.

Though a single modem **822** is shown to control transmission to both antennas **800** and **884**, the user device **805** may alternatively include multiple wireless modems, each of which is configured to transmit/receive data via a different antenna and/or wireless transmission protocol. In addition, the user device **805**, while illustrated with two antennas **800** and **884**, may include more or fewer antennas in various embodiments.

The user device **805** delivers and/or receives items, upgrades, and/or other information via the network. For example, the user device **805** may download or receive items from an item providing system. The item providing system receives various requests, instructions and other data from the user device **805** via the network. The item providing system may include one or more machines (e.g., one or more server computer systems, routers, gateways, etc.) that have processing and storage capabilities to provide the above functionality. Communication between the item providing system and the user device **805** may be enabled via any communication infrastructure. One example of such an infrastructure includes a combination of a wide area network (WAN) and wireless infrastructure, which allows a user to use the user device **805** to purchase items and consume items without being tethered to the item providing system via hardwired links. The wireless infrastructure may be provided by one or multiple wireless communications systems, such as one or more wireless communications systems. One of the wireless communication systems may be a wireless fidelity (Wi-Fi) hotspot connected with the network. Another of the wireless communication systems may be a wireless carrier system that can be implemented using various data processing equipment, communication towers, etc. Alternatively, or in addition, the wireless carrier system may rely on satellite technology to exchange information with the user device **805**.

The communication infrastructure may also include a communication-enabling system that serves as an intermediary in passing information between the item providing system and the wireless communication system. The communication-enabling system may communicate with the wireless communication system (e.g., a wireless carrier) via a dedicated channel, and may communicate with the item providing system via a non-dedicated communication mechanism, e.g., a public Wide Area Network (WAN) such as the Internet.

The user devices **805** are variously configured with different functionality to enable consumption of one or more types of media items. The media items may be any type of format of digital content, including, for example, electronic texts (e.g., eBooks, electronic magazines, digital newspapers, etc.), digital audio (e.g., music, audible books, etc.), digital video (e.g., movies, television, short clips, etc.), images (e.g., art, photographs, etc.), and multi-media content. The user devices **805** may include any type of content rendering devices such as electronic book readers, portable digital assistants, mobile phones, laptop computers, portable media players, tablet computers, cameras, video cameras, netbooks, notebooks, desktop computers, gaming consoles, DVD players, media centers, and the like.

FIG. **9** is a flow diagram of an embodiment of a method **900** of operating a user device having an antenna structure **100** of FIG. **1** according to one embodiment. In method **900**, a first current is applied at a single radio frequency (RF) input coupled to a first element and a second element of an antenna structure that are interleaved with a parasitic grounding element (block **902**). It should be noted that the first current is applied based on the type of RF feed and transmission line are being used. This may be by induction or by conduction as would be appreciated by one of ordinary skill in the art having the benefit of this disclosure. In response, the first and second elements parasitically induce a second current at the parasitic grounding element, the parasitic structure not being conductively connected to the RF feed (block **904**). In response to the induced currents, electromagnetic energy is radiated from the first and second elements and the parasitic grounding element to communicate information to another device (block **906**). The electromagnetic energy forms a radiation pattern. The radiation pattern may be various shapes as would be appreciated by one of ordinary skill in the art having the benefit of this disclosure.

In another embodiment, a current is applied at the RF feed, which induces a surface current flow of the antenna structure, including a first folded monopole element, a second monopole element, and a two-arm grounding strip. The first folded monopole antenna and the second monopole antenna parasitically induce a current flow of the two-arm grounding strip. By inducing current flow at the two-arm grounding strip, the two-arm grounding strip increases the bandwidth of the antenna structure, providing additional resonant modes to the resonant modes of the first folded monopole element and the second monopole element.

FIG. **10** is a flow diagram of an embodiment of a method **1000** of operating a user device having the antenna structure **500** of FIG. **5** according to one embodiment. In method **1000**, a first current is applied at a single radio frequency (RF) input coupled to a split-feed antenna element of an antenna structure (block **1002**). The antenna structure also includes a parasitic grounding element coupled to a ground plane. In response, the split-feed antenna element parasitically induces a second current at the parasitic grounding element, the parasitic structure not being conductively connected to the RF feed (block **1004**). In response to the induced currents, electromagnetic energy is radiated from the split-feed antenna element and the parasitic grounding element to communicate information to another device (block **1006**). As above, the electromagnetic energy forms a radiation pattern. The radiation pattern may be various shapes as would be appreciated by one of ordinary skill in the art having the benefit of this disclosure.

In method **900** and method **1000**, applying the first current and parasitically inducing the second current provides multiple resonant modes, including a first low-band mode, a second low-band mode, a first high-band mode, and a second high-band mode. In one embodiment of method **900**, the first low-band mode and the second low-band mode operate between 700 MHz and 960 MHz, and the first high-band mode and the second high-band mode operate between 1.71 GHz and 2.7 GHz. In one embodiment of method **1000**, the first low-band mode and the second low-band mode operate between 700 MHz and 960 MHz, and the first high-band mode and the second high-band mode operate between 1.71 GHz and 2.17 GHz.

In the above description, numerous details are set forth. It will be apparent, however, to one of ordinary skill in the art having the benefit of this disclosure, that embodiments of the present invention may be practiced without these specific details. In some instances, well-known structures and devices are shown in block diagram form, rather than in detail, in order to avoid obscuring the description.

Some portions of the detailed description are presented in terms of algorithms and symbolic representations of operations on data bits within a computer memory. These algorithmic descriptions and representations are the means used by those skilled in the data processing arts to most effectively convey the substance of their work to others skilled in the art. An algorithm is here, and generally, conceived to be a self-consistent sequence of steps leading to a desired result. The steps are those requiring physical manipulations of physical quantities. Usually, though not necessarily, these quantities take the form of electrical or magnetic signals capable of being stored, transferred, combined, compared, and otherwise manipulated. It has proven convenient at times, principally for reasons of common usage, to refer to these signals as bits, values, elements, symbols, characters, terms, numbers or the like.

It should be borne in mind, however, that all of these and similar terms are to be associated with the appropriate physical quantities and are merely convenient labels applied to these quantities. Unless specifically stated otherwise as apparent from the above discussion, it is appreciated that throughout the description, discussions utilizing terms such as "applying," "inducing," "parasitically inducing," "radiating," "detecting," determining," "generating," "communicating," "receiving," "disabling," or the like, refer to the actions and processes of a computer system, or similar electronic computing device, that manipulates and transforms data represented as physical (e.g., electronic) quantities within the computer system's registers and memories into other data similarly represented as physical quantities within the computer system memories or registers or other such information storage, transmission or display devices.

Embodiments of the present invention also relate to an apparatus for performing the operations herein. This apparatus may be specially constructed for the required purposes, or it may comprise a general-purpose computer selectively activated or reconfigured by a computer program stored in the computer. Such a computer program may be stored in a computer readable storage medium, such as, but not limited to, any type of disk including floppy disks, optical disks, CD-ROMs and magnetic-optical disks, read-only memories (ROMs), random access memories (RAMs), EPROMs, EEPROMs, magnetic or optical cards, or any type of media suitable for storing electronic instructions.

The algorithms and displays presented herein are not inherently related to any particular computer or other apparatus. Various general-purpose systems may be used with programs in accordance with the teachings herein, or it may prove convenient to construct a more specialized apparatus to perform the required method steps. The required structure for a variety of these systems will appear from the description below. In addition, the present invention is not described with reference to any particular programming language. It will be appreciated that a variety of programming languages may be used to implement the teachings of the present invention as described herein. It should also be noted that the terms "when" or the phrase "in response to," as used herein, should be understood to indicate that there may be intervening time, intervening events, or both before the identified operation is performed.

It is to be understood that the above description is intended to be illustrative, and not restrictive. Many other embodiments will be apparent to those of skill in the art upon reading and understanding the above description. The scope of the present invention should, therefore, be determined with reference to the appended claims, along with the full scope of equivalents to which such claims are entitled.

What is claimed is:

1. An electronic device comprising:

a radio frequency (RF) feed;

an antenna structure coupled to the RF feed and a ground plane, wherein the antenna structure comprises:

a first antenna element coupled to the RF feed;

a second antenna element coupled to the RF feed; and

a third antenna element coupled to the ground plane at a grounding point,

wherein a first portion of the third antenna element is disposed between a portion of the first antenna element and a portion of the second antenna element,

wherein the portion of the second antenna element is disposed between the first portion of the third antenna element and a second portion of the third antenna element,

wherein the portion of the first antenna element and the first portion of the third antenna element form a first coupling between the first antenna element and the third antenna element,

wherein the portion of the second antenna element and the first portion of the third antenna element form a second coupling between the second antenna element and the third antenna element, and

wherein the portion of the second antenna element and the second portion of the third antenna element form a third coupling between the second antenna element and the third antenna element.

2. The electronic device of claim **1**, wherein the first antenna element is a folded monopole element, wherein the second antenna element is a monopole element, wherein the third antenna element comprises a two-arm grounding strip and a ground line coupled between the two-arm grounding strip and the grounding point, and wherein the folded monopole element and the monopole element operate as feeding structures to the two-arm grounding strip, which is not conductively connected to the RF feed.

3. The electronic device of claim **2**, wherein the two-arm grounding strip comprises:

a first arm that extends in a first direction from where the ground line couples to the two-arm grounding strip, wherein the first arm comprises the first portion of the third antenna element; and

a second arm that extends in a second direction from where the ground line couples to the two-arm grounding strip.

4. The electronic device of claim **3**, further comprising a fourth antenna element coupled to a distal end of the second arm of the two-arm grounding strip.

5. The electronic device of claim **1**, wherein the antenna structure is configured to radiate electromagnetic energy in a plurality of resonant modes, wherein the plurality of resonant modes comprises a first low-band mode, a second low-band mode, a first high-band mode, and a second high-band mode, and wherein the first low-band mode and the second low-band mode operate between about 700 MHz and about 960 MHz, and the first high-band mode and the second high-band mode operate between about 1.71 GHz and about 2.7 GHz.

6. An antenna structure comprising:

a ground plane;

a radio frequency (RF) feed;

a first antenna element coupled to the RF feed;

a second antenna element coupled to the RF feed; and

a third antenna element coupled to the ground plane at a grounding point,

wherein a first portion of the third antenna element is disposed between a portion of the first antenna element and a portion of the second antenna element to form a first coupling between the first antenna element and the

third antenna element and to form a second coupling between the second antenna element and the third antenna element; and

wherein the portion of the second antenna element is disposed between the first portion of the third antenna element and a second portion of the third antenna element to form a third coupling between the second antenna element and the third antenna element.

7. The antenna structure of claim **6**, wherein the first coupling, second coupling and third coupling are tunable factors of the antenna structure.

8. The antenna structure of claim **6**, wherein the first antenna element and the second antenna element radiate electromagnetic energy in a first resonant mode, a second resonant mode and a third resonant mode when RF signals are applied to the RF feed, and wherein the third antenna element radiates electromagnetic energy in a fourth resonant mode in response to parasitic currents induced by the first coupling, the second coupling, and the third coupling when the RF signals applied to the RF feed.

9. The antenna structure of claim **8**, wherein a first gap between the first portion of the third antenna element and the portion of the first antenna element has a first tuning effect on the first, second, third and four resonant modes, wherein a second gap between the first portion of the third antenna and the portion of the second antenna element has a second tuning effect on the first, second, third and fourth resonant modes, and wherein a third gap between the portion of the second antenna element and the second portion of the third antenna element has a third tuning effect on the first, second, third and fourth resonant modes.

10. The antenna structure of claim **8**, wherein the first resonant mode is centered at approximately 700 MHz, the second resonant mode is centered at approximately 900 MHz, the third mode is centered at approximately 2.2 GHz and the fourth resonant mode is centered at approximately 1.5 GHz.

11. The antenna structure of claim **8**, wherein the first resonant mode is tuned to correspond to a Long Term Evolution (LTE) band centered at approximately 700 MHz, and the second, third and fourth resonant modes are tuned to correspond to at least one of a penta-band, a quad-band Global System for Mobile Communications (GSM), or a tri-band Universal Mobile Telecommunications System (UMTS), wherein the penta-band comprises a first set of frequency bands centered at approximately 850 MHz, approximately 900 MHz, approximately 1700 MHz, approximately 2100 MHz and approximately 1900 MHz, wherein the quad-band comprises a second set of bands centered at approximately 850 MHz, approximately 900 MHz, approximately 1800 MHz and approximately 1900 MHz, and wherein the tri-band comprises a third set of bands centered at approximately 850 MHz, approximately 1900 and approximately 2100 MHz.

12. The antenna structure of claim **8**, wherein the first resonant mode is tuned to correspond to a first Long Term Evolution (LTE) band centered at approximately 700 MHz, and the second, third and fourth resonant modes are tuned to correspond to at least one of a second LTE band centered at approximately 2.3 GHz or a third LTE band centered at approximately 2.5 GHz.

13. The antenna structure of claim **8**, wherein the first resonant mode is tuned to correspond to a first Long Term Evolution (LTE) band centered at approximately 700 MHz, and the second, third and fourth resonant modes are tuned to correspond to at least one of a Global Positioning System (GPS) band, a wireless local area network (WLAN) band, or personal area network (PAN) band.

14. The antenna structure of claim **8**, wherein the first resonant mode is a first low-band mode, the second resonant mode is a second low-band mode, the third resonant mode is a first high-band mode and the fourth resonant mode is a second high-band mode.

15. The antenna structure of claim **8**, wherein the antenna structure is disposed on an antenna carrier.

16. The antenna structure of claim **8**, wherein a height of the antenna structure is between about 3 millimeters (mm) and about 5 mm and a width of the antenna structure is between about 3 mm and about 5 mm, and wherein a length of the antenna structure is between about 30 mm and about 60 mm.

17. A method of operating an electronic device, the method comprising:

applying a first current to a radio frequency (RF) feed coupled to a first antenna element and a second antenna element of an antenna structure, wherein the antenna structure further comprises a third antenna element coupled to a ground plane and at least partially disposed between the first and second antenna elements to form a first coupling between the first antenna element and the third antenna element, a second coupling between the second antenna element and the third antenna element and a third coupling between the second antenna element and the third antenna element;

in response, parasitically inducing a second current at the third antenna element, wherein the third antenna element is not conductively connected to the RF feed; and

radiating electromagnetic energy from the first element, the second element and the third antenna element to communicate information to another device in response to the first and second currents.

18. The method of claim **17**, further comprising:

upon applying the first current, radiating, by the first antenna element and the second antenna element, electromagnetic energy in a first resonant mode a first resonant mode, a second resonant mode and a third resonant mode; and

upon parasitically inducing the second current by the first, second and third couplings, radiating, by the third antenna element, electromagnetic energy in a fourth resonant mode.

19. The method of claim **18**, wherein the first resonant mode is centered at approximately 700 MHz, the second resonant mode is centered at approximately 900 MHz, the third mode is centered at approximately 2.2 GHz and the fourth resonant mode is centered at approximately 1.5 GHz.

20. The method of claim **18**, wherein the first resonant mode is tuned to correspond to a Long Term Evolution (LTE) band centered at approximately 700 MHz, and the second, third and fourth resonant modes are tuned to correspond to at least one of a penta-band, a quad-band Global System for Mobile Communications (GSM), or a tri-band Universal Mobile Telecommunications System (UMTS), wherein the penta-band comprises a first set of frequency bands centered at approximately 850 MHz, approximately 900 MHz, approximately 1700 MHz, approximately 2100 MHz and approximately 1900 MHz, wherein the quad-band comprises a second set of bands centered at approximately 850 MHz, approximately 900 MHz, approximately 1800 MHz and approximately 1900 MHz, and wherein the tri-band comprises a third set of bands centered at approximately 850 MHz, approximately 1900 and approximately 2100 MHz.

* * * * *