US009409727B2

(12) **United States Patent**
German et al.

(10) **Patent No.: US 9,409,727 B2**
(45) **Date of Patent: Aug. 9, 2016**

(54) **CONVEYOR MERGE ASSEMBLY**

(71) Applicant: **Dematic Corp.**, Grand Rapids, MI (US)

(72) Inventors: **H. Thad German**, Belding, MI (US); **David M. Berghorn**, Grand Rapids, MI (US); **Matthew T. Brayman**, Ada, MI (US); **James P. Johnson**, Rockford, MI (US); **Bruce E. Taylor**, Morley, MI (US); **William P. Bray**, Spring Lake, MI (US)

(73) Assignee: **Dematic Corp.**, Grand Rapids, MI (US)

(*) Notice: Subject to any disclaimer, the term of this patent is extended or adjusted under 35 U.S.C. 154(b) by 0 days.

(21) Appl. No.: **14/291,386**

(22) Filed: **May 30, 2014**

(65) **Prior Publication Data**

US 2014/0353122 A1 Dec. 4, 2014

Related U.S. Application Data

(60) Provisional application No. 61/829,765, filed on May 31, 2013.

(51) **Int. Cl.**

B65G 47/72	(2006.01)
B65G 47/68	(2006.01)
B65G 13/10	(2006.01)
B65G 13/11	(2006.01)

(52) **U.S. Cl.**

CPC ***B65G 47/681*** (2013.01); ***B65G 13/10*** (2013.01); ***B65G 13/11*** (2013.01)

(58) **Field of Classification Search**

CPC B65G 47/68; B65G 47/681; B65G 47/71; B65G 21/2063; B65G 21/2072; B65G 21/2081

USPC 198/601, 860.1, 370.02, 370.09, 198/370.01, 370.1, 583

See application file for complete search history.

(56) **References Cited**

U.S. PATENT DOCUMENTS

1,815,549	A	7/1931	Dietz	
2,366,279	A	1/1945	Mitchell	
2,627,960	A *	2/1953	Eberle	193/35 TE
2,901,083	A	8/1959	McGrath	
3,643,781	A *	2/1972	Risley	B65G 21/2072 198/599
4,526,266	A	7/1985	Dietz	
6,811,018	B2	11/2004	Cotter et al.	

(Continued)

FOREIGN PATENT DOCUMENTS

GB 2123375 A 2/1984

OTHER PUBLICATIONS

International Search Report and Written Opinion of the International Searching Authority from corresponding Patent Cooperation Treaty (PCT) Application No. PCT/US2014/040249, mailed Dec. 4, 2014.

Primary Examiner — William R Harp

(74) *Attorney, Agent, or Firm* — Gardner, Linn, Burkhart ad Flory, LLP

(57) **ABSTRACT**

A conveyor assembly comprising a main conveyor having a first side frame and a second side frame, with the first and/or second side frames including a side portion and a support surface. One or more input conveyors having a discharge end are joined to the main conveyor with a bottom portion of the discharge end being positioned on the support surface whereby the input conveyors are accurately mounted in close proximity to the main conveyor to promote the conveyance of items from the input conveyors onto the main conveyor.

32 Claims, 13 Drawing Sheets

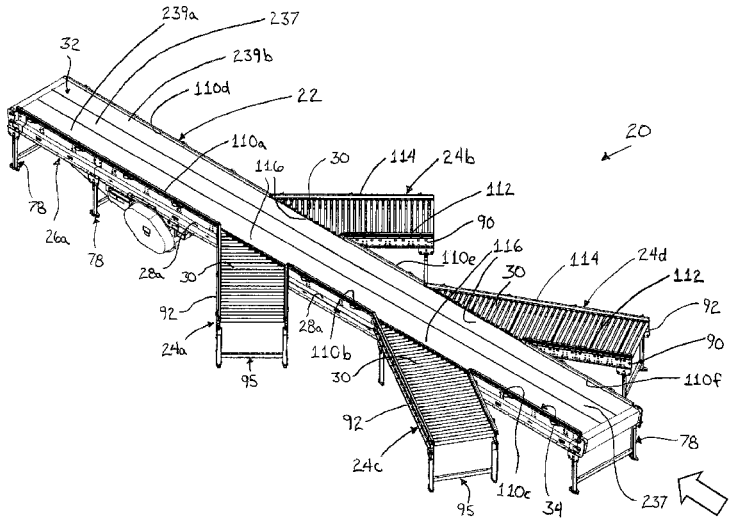

(56) **References Cited**

U.S. PATENT DOCUMENTS

6,871,737	B2 *	3/2005	Ertel	B65G 21/06 198/813
7,093,709	B2	8/2006	Cotter et al.	
7,234,588	B1	6/2007	Buxton	
7,422,098	B2	9/2008	Bonham et al.	
7,556,144	B2	7/2009	Cotter et al.	
7,861,849	B2	1/2011	Fourney	
8,397,897	B2	3/2013	Bastian, II et al.	
8,474,596	B2 *	7/2013	Wolkerstorfer et al.	198/370.09
2013/0126300	A1 *	5/2013	Wolkerstorfer et al.	198/370.09

* cited by examiner

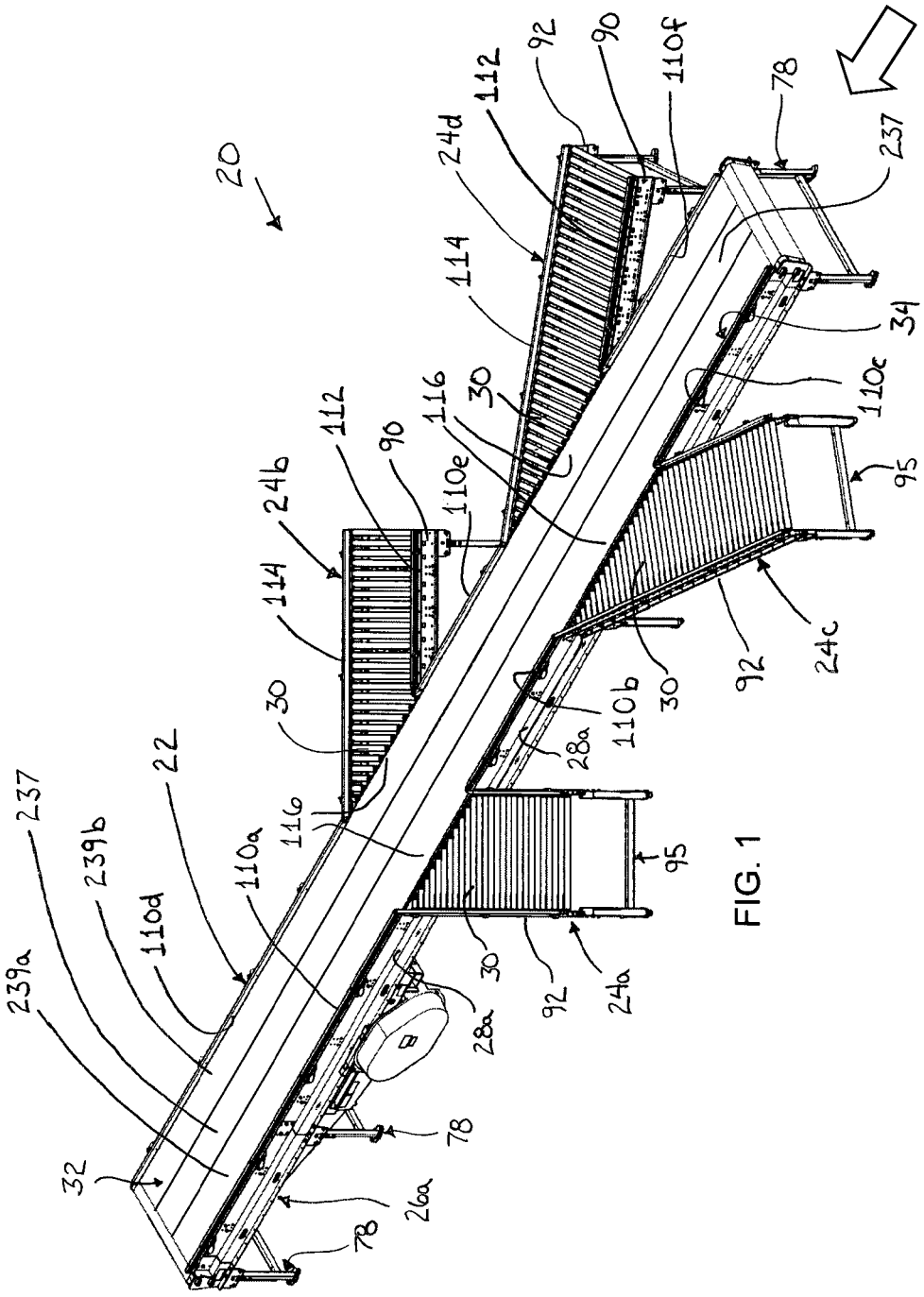
20
22
24a
24b
24c
24d
26a
28a
30
32
34
78
90
92
95
110a
110b
110c
110d
110e
110f
112
114
116
237
239a
239b

FIG. 1

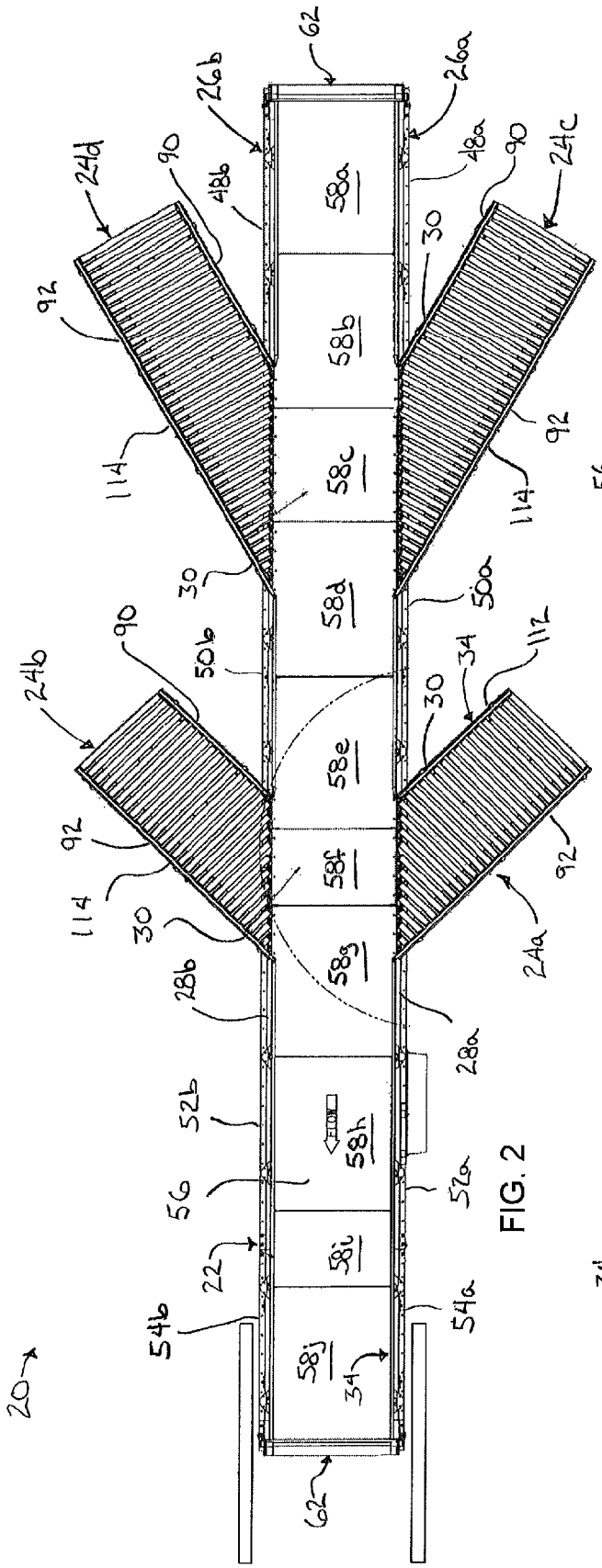
20
22
24a
24b
24c
24d
26a
26b
28a
28b
30
34
48a
48b
50a
50b
52a
52b
54a
54b
56
58a
58b
58c
58d
58e
58f
58g
58h
58i
58j
62
90
92
112
114
FLOW

FIG. 2

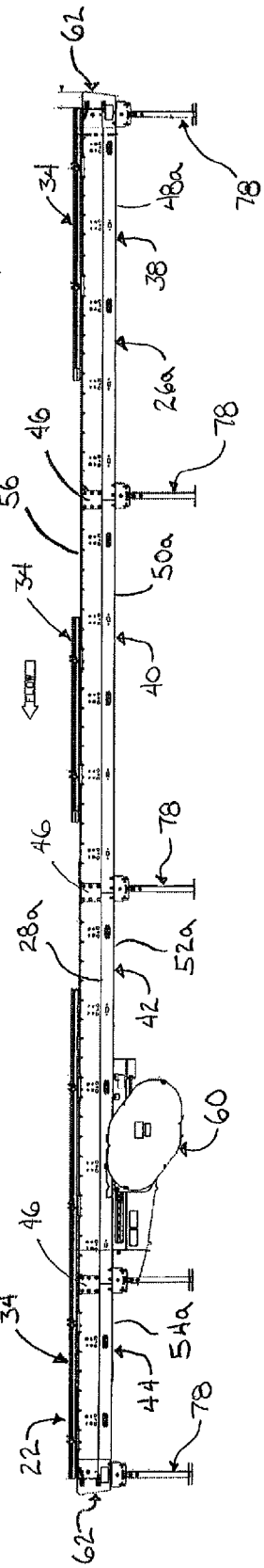
20
22
26a
28a
34
38
40
42
44
46
48a
50a
52a
54a
56
60
62
78
FLOW

FIG. 2A

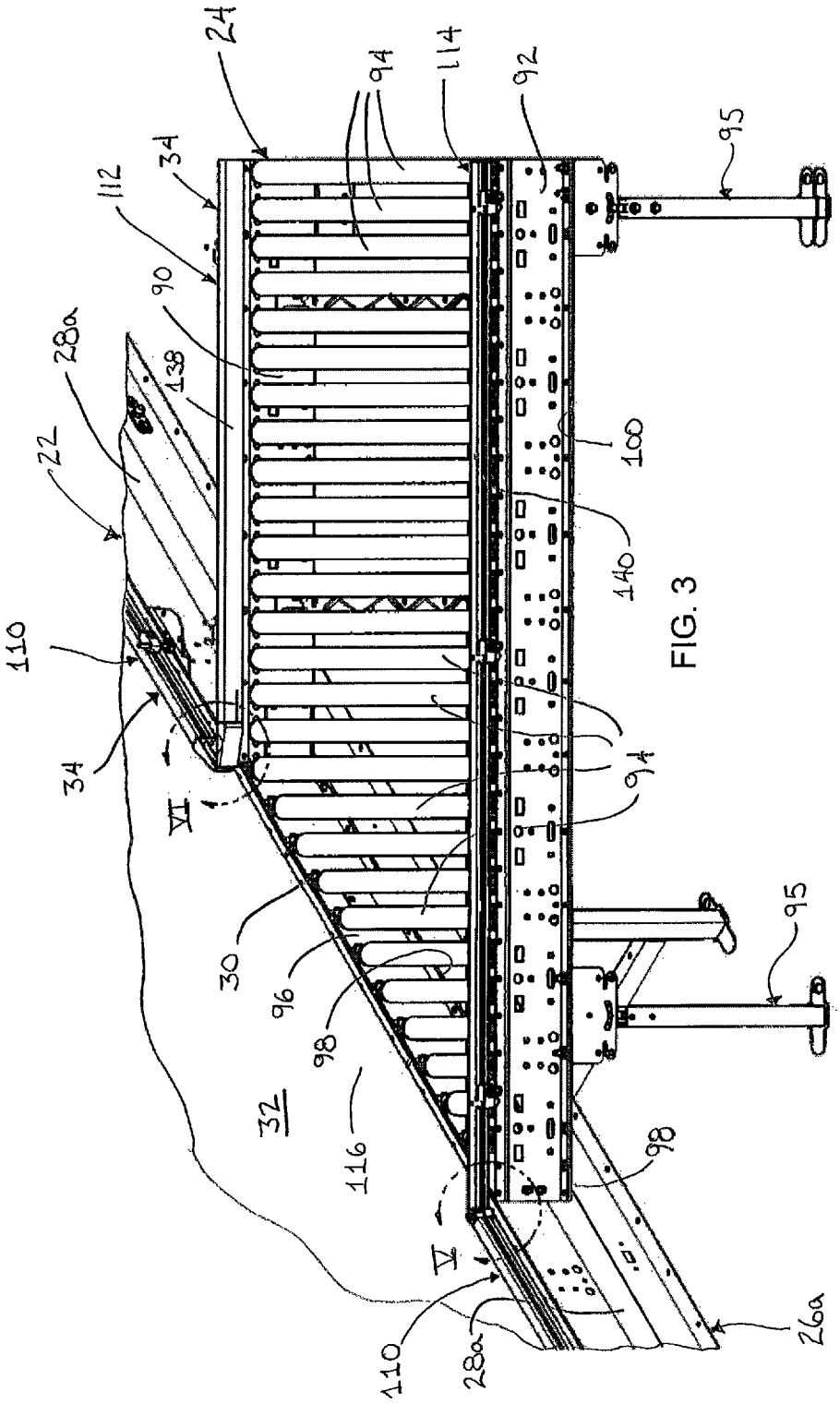
24
94
114
92
95
34
112
90
28a
138
22
100
140
110
34
VI
94
30
96
98
32
116
V
110
28a
98
95
26a

FIG. 3

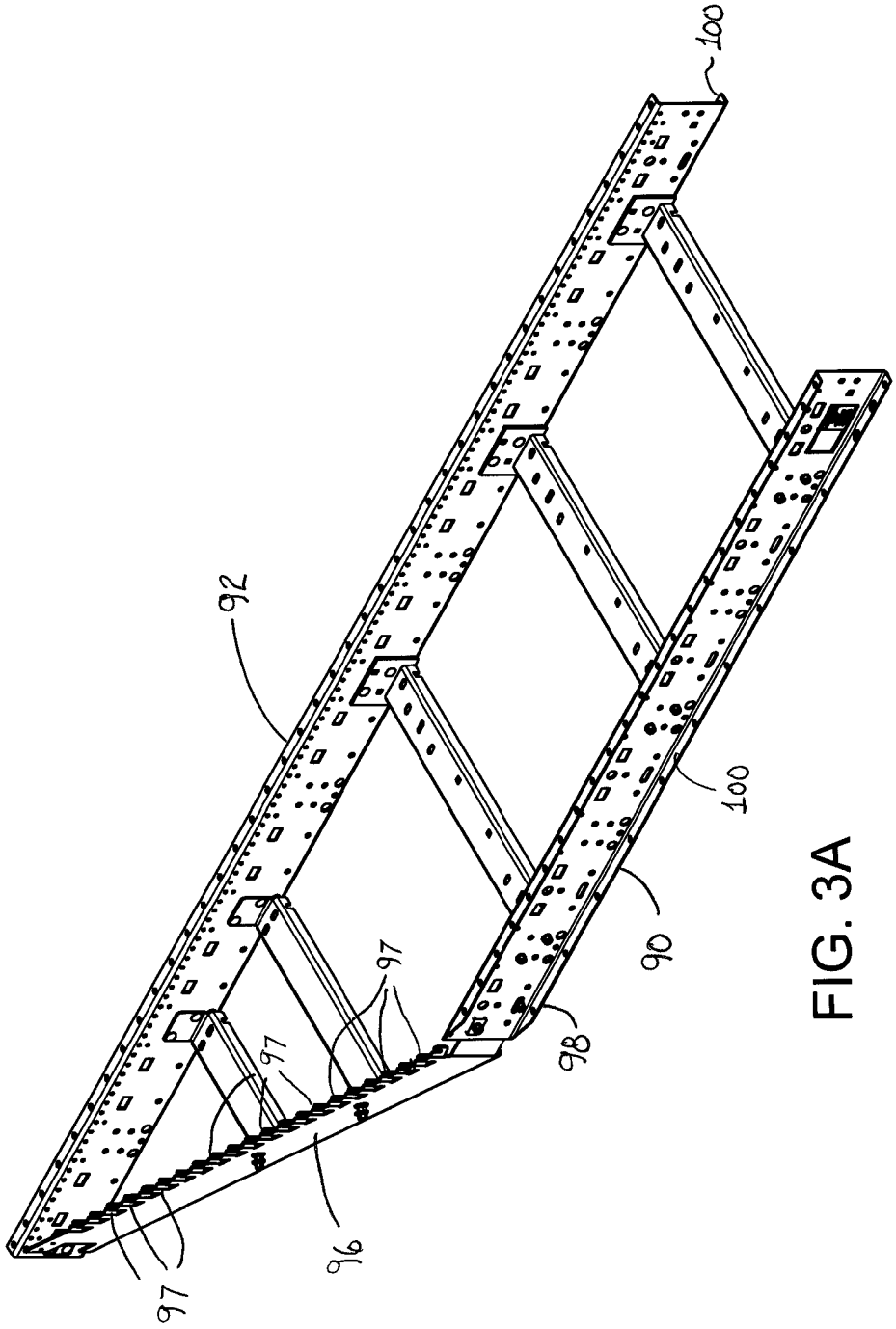

FIG. 3A

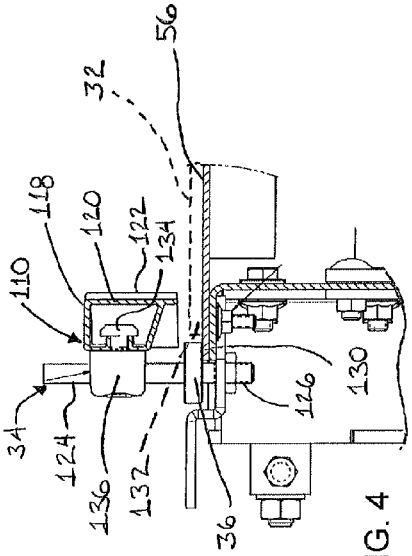

FIG. 4

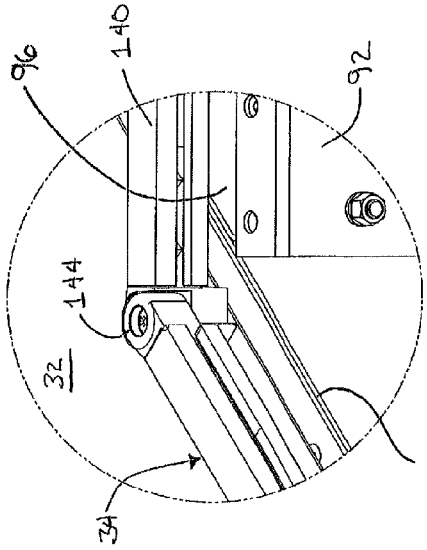

FIG. 5

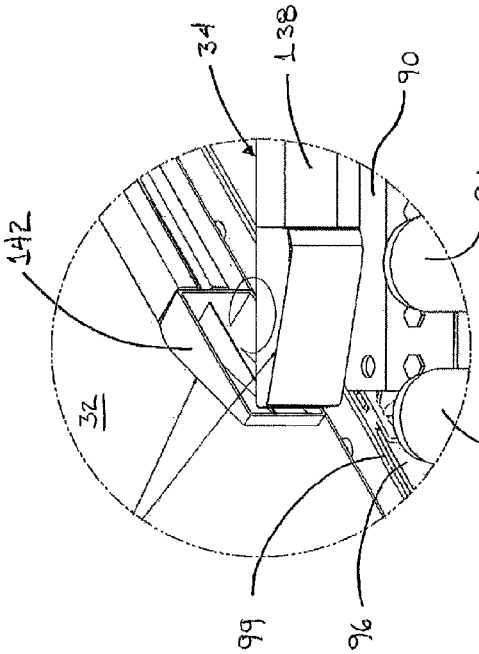

FIG. 6

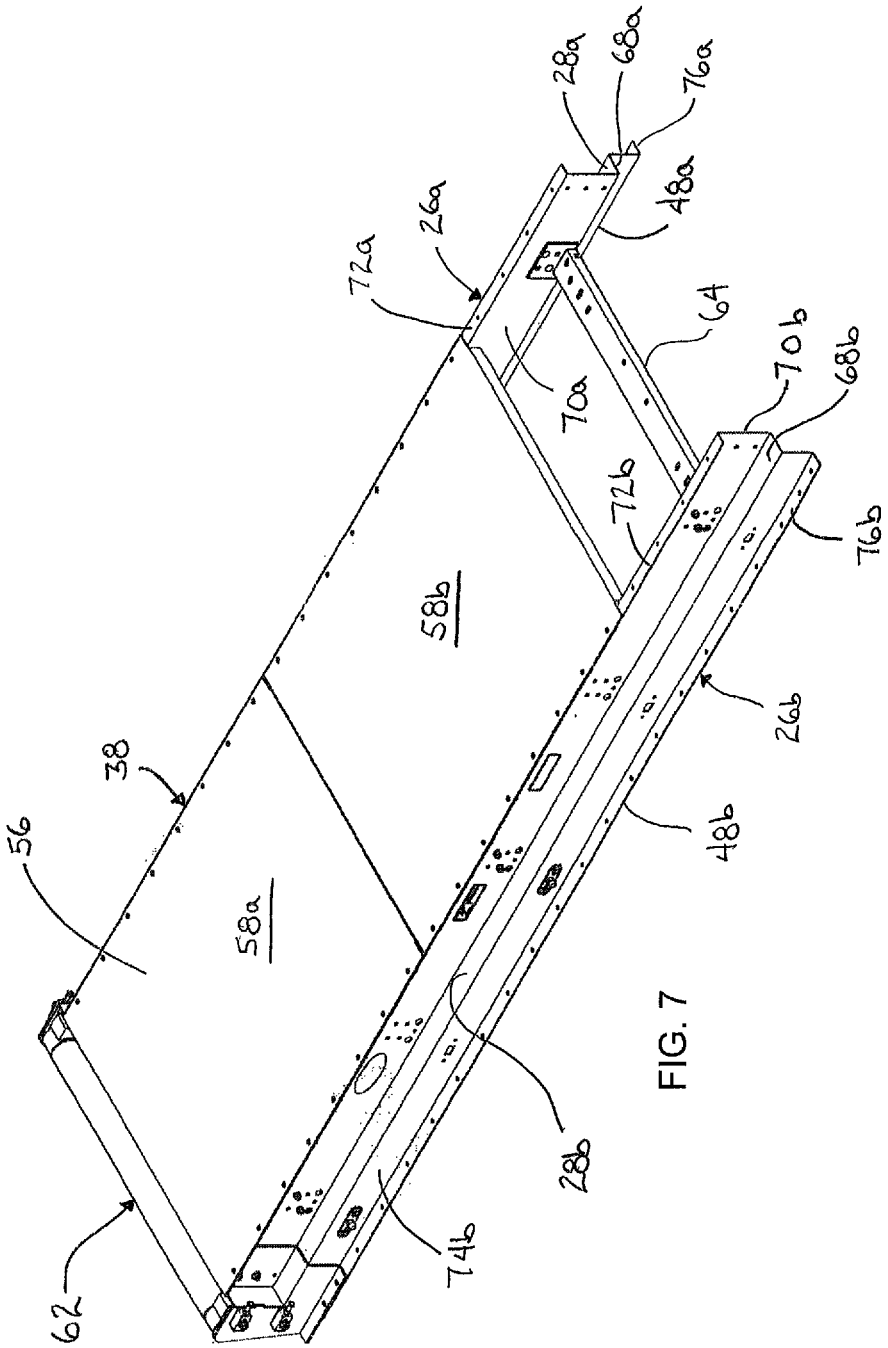
28a
68a
76a
48a
26a
72a
64
70a
70b
68b
72b
76b
58b
26b
38
56
48b
58a
28b
74b
62

FIG. 7

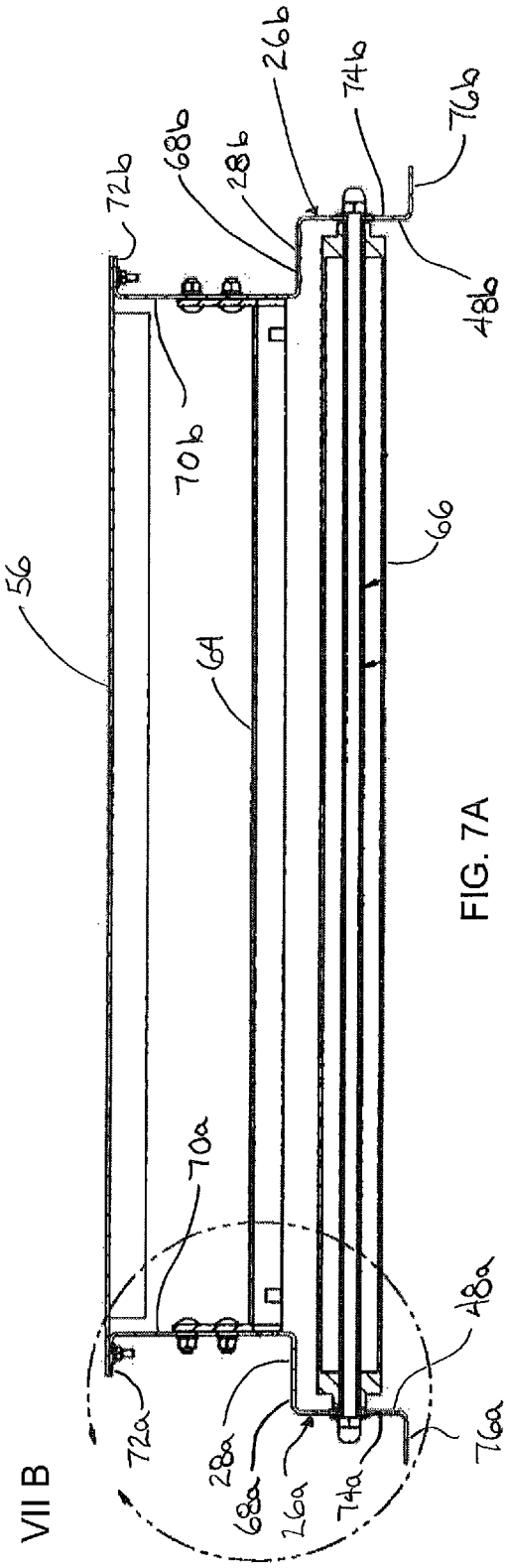
56
64
66
70b
72b
68b
28b
26b
74b
76b
48b
70a
72a
28a
68a
26a
74a
76a
48a
VII B

FIG. 7A

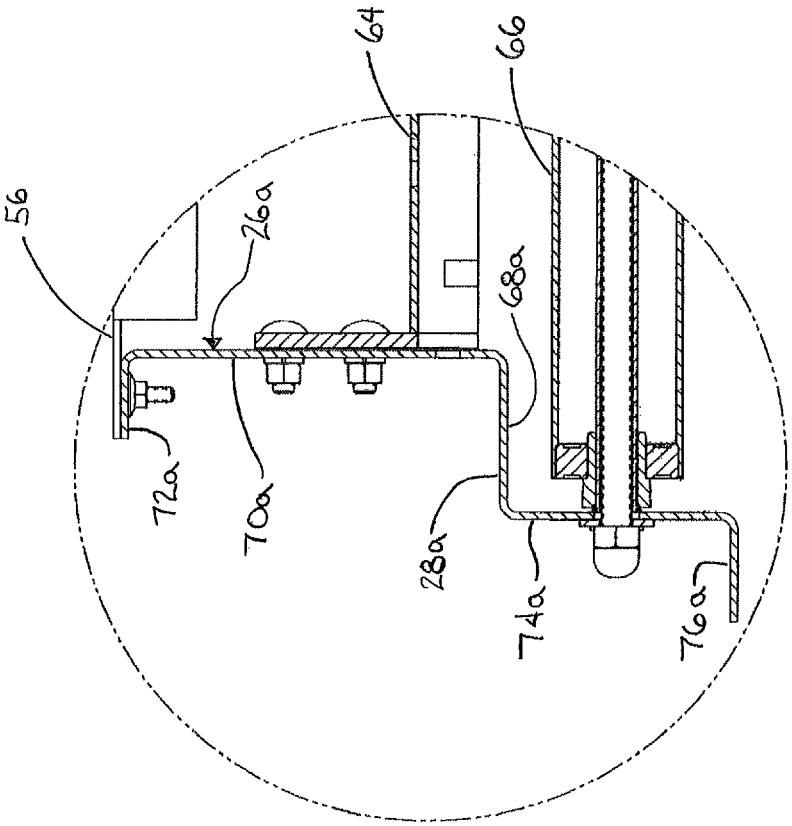

FIG. 7B

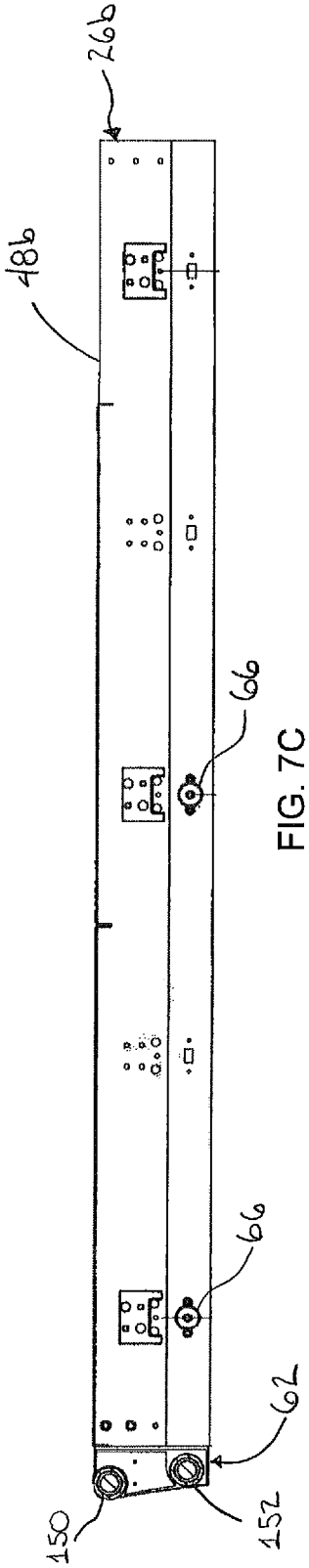

FIG. 7C

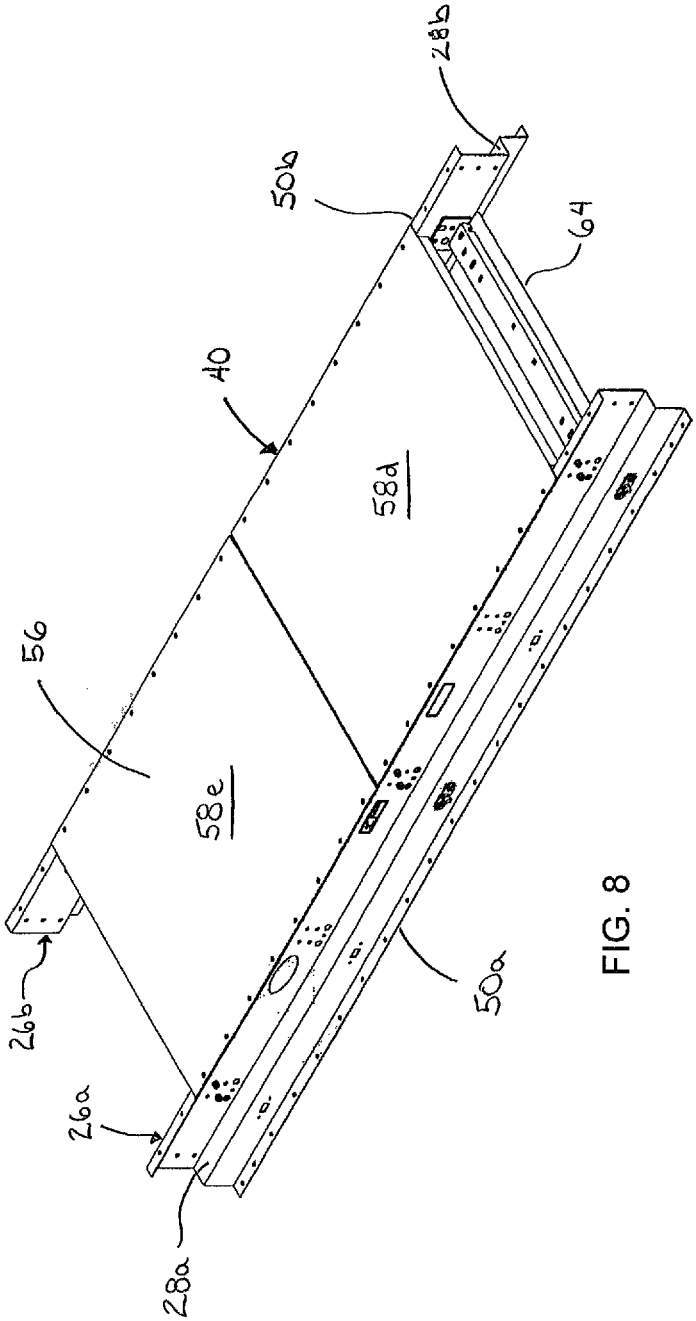

FIG. 8

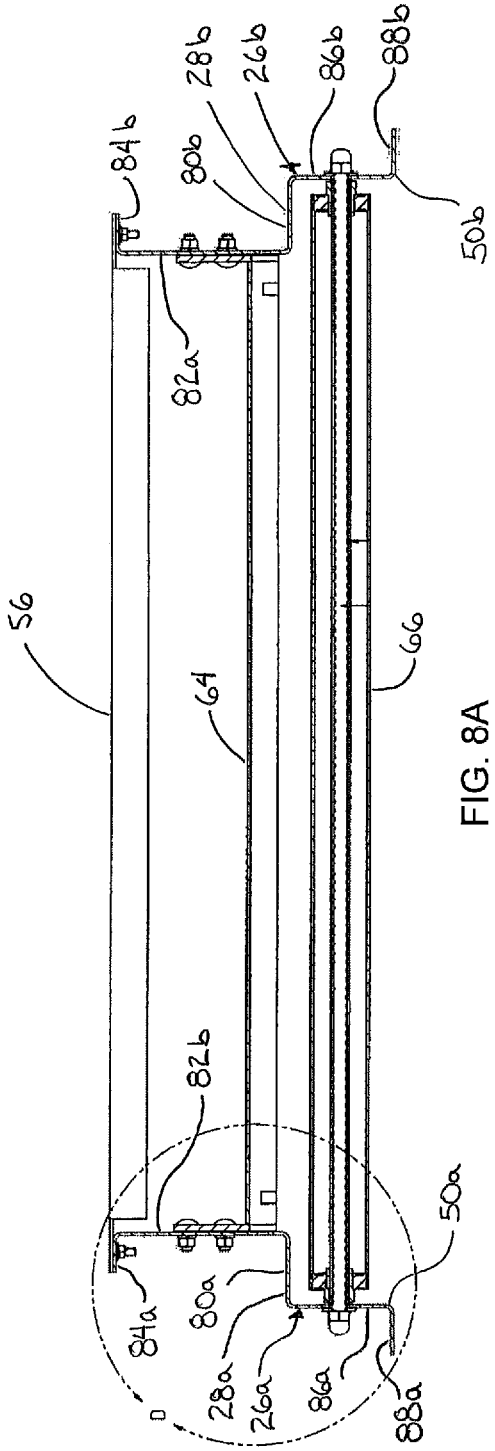
56
84b
82a
80b
28b
26b
86b
88b
50b
64
66
82b
84a
80a
28a
26a
86a
88a
50a

FIG. 8A

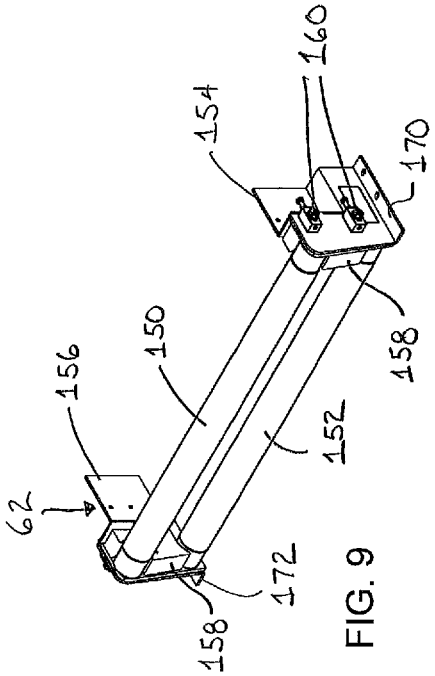
62
156
150
154
160
170
158
152
172
158

FIG. 9

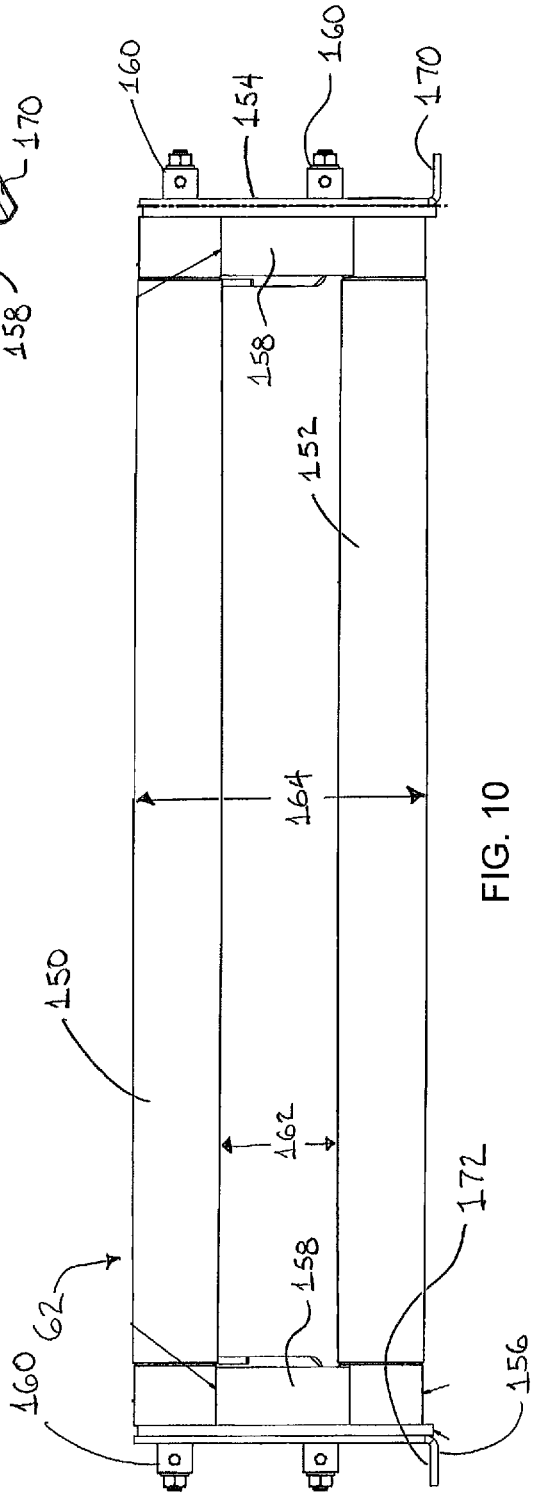
160
154
160
170
158
152
164
150
162
158
172
62
160
156

FIG. 10

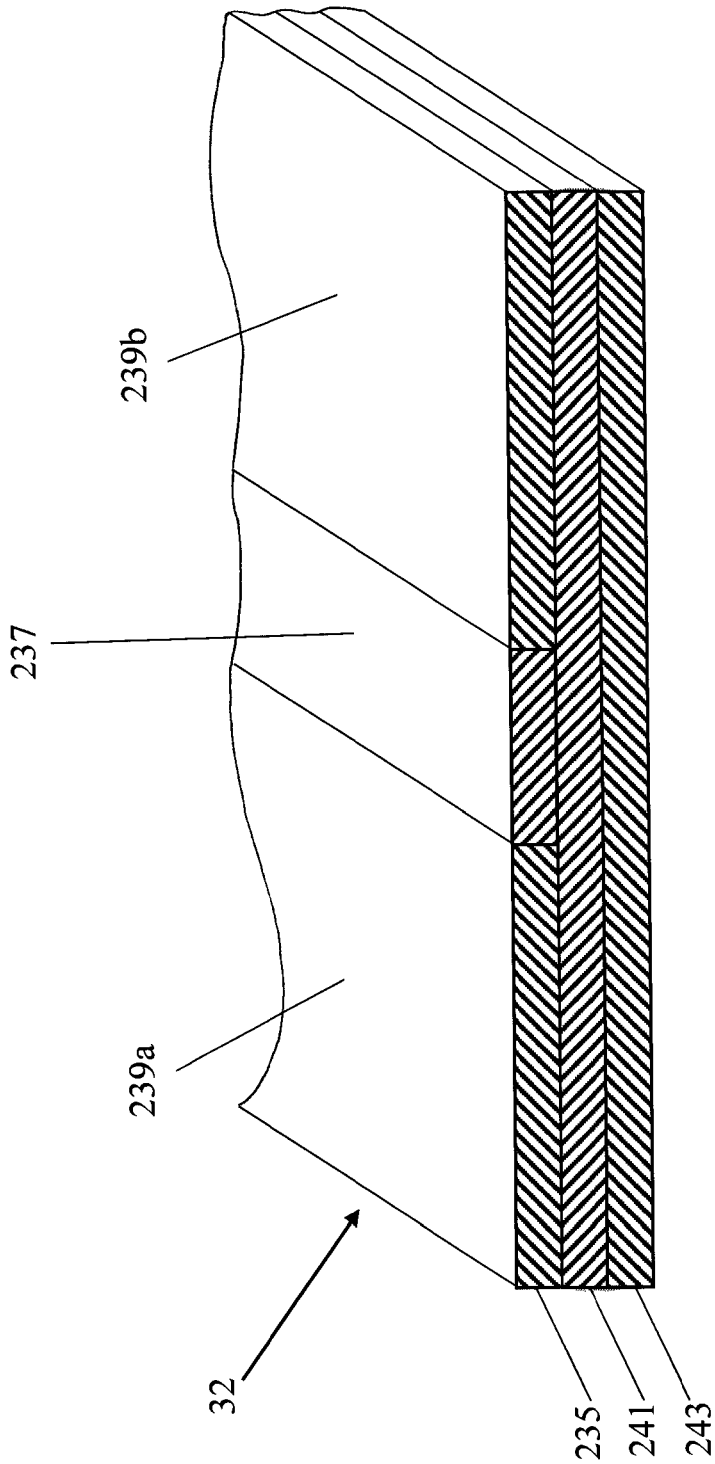

FIG. 11

CONVEYOR MERGE ASSEMBLY

CROSS REFERENCE TO RELATED APPLICATION

The present application claims priority of U.S. provisional application Ser. No. 61/829,765 filed May 31, 2013, for CONVEYOR MERGE ASSEMBLY, which is hereby incorporated herein by reference in its entirety.

BACKGROUND OF THE INVENTION

The present invention is directed to a conveyor and a conveyor merge assembly, and in particular to a belt conveyor with one or more roller conveyor inputs, as well as to a belt for use with a belt conveyor.

Conveyor merge assemblies involve conveying items, such as packages, containers, or the like, from input conveyors onto a moving main conveyor for further distribution, such as for order fulfillment or warehousing. The input conveyors may be located on both longitudinal sides of the main conveyor, which may be constructed as a belt conveyor, with the input conveyor orientation being angled relative to the main conveyance direction. The items input onto the main conveyor are then subsequently discharged or removed from the main conveyor at a desired location.

SUMMARY OF THE INVENTION

The present invention provides a conveyor and a conveyor merge assembly. A main belt conveyor includes side support surfaces formed as ledges upon which input conveyors, such as roller conveyors, may be received. The support surface provides accurate alignment and enables the end of the input conveyors to be mounted proximate the belt of the belt conveyor to create substantial continuity of conveying surfaces and thereby promote the transfer of items conveyed from the input conveyor to the belt conveyor.

According to an aspect of the present invention, a conveyor assembly comprises a main conveyor and an input conveyor having a discharge end mounted to the main conveyor. The main conveyor includes first and second side frames with the first side frame including a side portion and a support surface. The discharge end of the input conveyor includes a bottom portion that is positioned on the support surface when the discharge end of the input conveyor is mounted to the first side frame of the main conveyor.

The main conveyor may be a belt conveyor with one or more roller input conveyors mounted to the first side of the belt conveyor. Still further, the second side of the main conveyor may also include a side portion and a support surface, with the discharge ends of one or more roller input conveyors mounted thereto in like manner. In particular embodiments the belt conveyor includes a top surface extending between the first and second side frames with the belt being moveable over the top surface and having first and second edges defining a width of the belt, and with the support surface being vertically lower than the top surface and extending outwardly from the first side frame beyond the top surface. The support surface may be constructed as a support wall defining a ledge, and may be generally orthogonally oriented relative to the conveyor.

The side frames may be defined by one or more elongate side channels and may further include an upper flange over which the top surface of the conveyor extends, and the top surface may be defined by one or more panel members. The flange may extend outwardly relative to a side wall of the side frame. The bottom portion of the discharge ends of the input conveyors may be defined by bottom surfaces of side rails of the input conveyors that are mounted on the support surfaces of the main conveyor side frames.

A belt for use with the main conveyor or alternative belt conveyors includes a central portion and a pair of side portions, with the central portion having a higher coefficient of friction relative to the side portions and therefore providing greater frictional surface resistance. The belt comprises a multi-layer belt with the central and side portions in a top layer of the belt.

A main conveyor may alternatively be provided with a guard assembly, where when employed with input conveyors the guard assembly may extend to the input conveyors. In the case of a main belt conveyor, the guard assembly is mounted adjacent to and extends along the side frame, with the guard assembly including a guard member located inwardly above the top surface of the main conveyor. The guard member may also be located inwardly above the edge of the belt and may be formed as a generally vertically oriented guard surface, such as an elongate guard rail. Still further, the guard assembly may further include one or more guide members, such as rollers or bearings, against which the edge of the belt contacts.

Additionally or alternatively, the belt conveyor may include an end pulley assembly at the discharge or input ends of the conveyor, where the end pulley assembly has vertically spaced top and bottom rollers around which the belt travels. The top and bottom rollers have parallel axes of rotation with the axis of rotation of said top roller being positioned vertically higher than the axis of rotation of said bottom roller. The axis of rotation of the top roller may also be positioned outwardly further than the axis of rotation of the bottom roller.

The conveyor assembly of the present invention enables input conveyors to be accurately mounted in close proximity to the main conveyor, thereby promoting the conveyance of items from the input conveyors onto the main conveyor. Moreover, a belt conveyor configured with the end pulley assemblies in accordance with another aspect of the invention enables the conveyor to be axially aligned with another conveyor, such as another belt conveyor, with a minimized gap in the conveying plane of the two associated belts.

These and other objects, advantages, purposes and features of this invention will become apparent upon review of the following specification in conjunction with the drawings.

BRIEF DESCRIPTION OF THE DRAWINGS

FIG. **1** is an overhead perspective view of a conveyor assembly in accordance with the present invention showing input conveyors merging with a main conveyor;

FIG. **2** is a top plan view of the conveyor assembly of FIG. **1**;

FIG. **2**A is a side elevation view of the conveyor assembly of FIG. **1**:

FIG. **3** is a partial perspective view of the connection of an input conveyor with the main conveyor of FIG. **1**;

FIG. **3**A is an overhead perspective view of the framework of one of the input conveyors of the conveyor assembly of FIG. **1** with the rollers removed for clarity;

FIG. **4** is a partial cross-sectional view of the guard assembly located along the main conveyor of FIG. **1**;

FIG. **5** is a partial close up perspective view of the detail V of FIG. **3**;

FIG. **6** is a partial close up perspective view of the detail VI of FIG. **3**;

FIG. **7** is a perspective view of an intermediate section of the main conveyor of FIG. **1** shown separated from the conveyor;

FIG. **7**A is a cross-sectional view of the intermediate section of FIG. **7**;

FIG. **7**B is a partial close up view of the detail VIIB of FIG. **7**;

FIG. **7**C is a side view of the intermediate section of FIG. **7**;

FIG. **8** is a perspective view of an end section of the main conveyor of FIG. **1** shown separated from the conveyor;

FIG. **8**A is a cross-sectional view of the end section of FIG. **8**;

FIG. **9** is a perspective view of an end pulley assembly of the main conveyor of FIG. **1** shown separated from the conveyor;

FIG. **10** is an end elevation view of the end pulley assembly of FIG. **9**; and

FIG. **11** is a partial cross-sectional perspective view of the conveyor belt of FIG. **1** removed from the main conveyor.

DESCRIPTION OF THE PREFERRED EMBODIMENTS

The present invention will now be described with reference to the accompanying figures, wherein the numbered elements in the following written description correspond to like-numbered elements in the figures. As shown in FIGS. **1** and **2**, a conveyor assembly **20** is shown that includes a main conveyor configured as a belt conveyor **22** and multiple input conveyors comprising roller conveyors **24***a*, **24***b*, **24***c* and **24***d*, where the input conveyors are configured to deliver items to belt conveyor **22** in the manner of a merge conveyor system. Belt conveyor **22** includes side frames **26***a*, **26***b* that include an integral support surface **28***a*, **28***b* formed as a ledge in side frames **26***a*, **26***b*, respectively. The roller conveyors **24***a*, **24***b*, **24***c*, **24***d* each include a discharge end **30** that are mounted on the respective support surfaces **28***a*, **28***b* of belt conveyor **22**. Accordingly, as discussed in detail below, roller conveyors **24***a*, **24***b*, **24***c*, **24***d* are accurately aligned with belt conveyor **22** with discharge ends **30** being positioned in substantial proximity to the belt **32** of belt conveyor **22**. This accurate and proximate connection aids in reducing any gap between the belt **32** and the roller conveyors **24***a*, **24***b*, **24***c*, **24***d*, thereby providing substantial continuity between the conveying surfaces and improving the delivery of items from conveyors **24** onto belt conveyor **22**.

As also discussed below, conveyor assembly **20** further includes a guard assembly **34** extending along the sides of the belt conveyor **22** and roller conveyors **24** to aid in maintaining items on the conveyors. Guide members, which in the illustrated embodiment comprise rollers or roller bearings **36** (FIG. **4**) are also provided at the sides of belt conveyor **22** that contact and aid in maintaining the position of the belt **32** on belt conveyor **22** and promote or enable belt **32** to extend outwardly toward the sides of belt conveyor **22** to further minimize any gap between the belt **32** and roller conveyors **24***a*, **24***b*, **24***c*, **24***d*.

Referring to FIG. **2**A, main conveyor **22** in the illustrated embodiment is shown to comprise a first end section **38**, a pair of intermediate sections **40** and **42**, and a second end section **44**, where the various sections are joined together using connecting plates **46**, such as by being bolted together. As also understood from FIG. **2**A, side frame **26***a* is formed by the interconnection of side channels **48***a*, **50***a*, **52***a*, and **54***a* of the respective first end section **38**, intermediate sections **40**, **42**, and second end section **44**, where the side channels have similar cross sectional profiles, but may be of alternative lengths. Similarly, side frame **26***b* is formed by the interconnection of corresponding opposite side channels **48***b*, **50***b*, **52***b*, and **54***b* for the various sections, where the side channels forming side frame **26***b* are substantially mirror image structures of the side channels forming side frame **26***a*.

As shown in FIG. **2**, belt conveyor **22** further includes a top surface **56** defining a slider bed over which belt **32** travels to convey items, where top surface **56** in the illustrated embodiment is defined by multiple panel members **58***a*-**58***j* that are affixed between side frames **26***a*, **26***b*. A drive train assembly **60** is mounted to conveyor **22** for driving belt **32**, with end pulley assemblies **62** being located on either end of conveyor **22**, where belt **32** travels around end pulley assemblies **62** when its travel direction is reversed.

First end section **38** is shown in FIGS. **7**-**7**B. End pulley assembly **62** is affixed to side channels **48***a*, **48***b* at one end of section **38**, with panel members **58***a*, **58***b* extending across side channels **48***a*, **48***b* and being affixed thereto. Although only one is shown, section **38** further includes multiple cross members **64** extending between side channels **48***a*, **48***b* beneath panel members **58***a*, **58***b*. As understood from FIG. **7**A, section **38** further includes lower rollers **66** (one shown) over which belt **32** is moved beneath top surface **56** for returning belt **32** in the opposite direction in which belt **32** travels over top surface **56**.

The profile of side channels **48***a*, **48***b* is shown in FIGS. **7**A and **7**B. Support surfaces **28***a*, **28***b* are defined by generally horizontal support walls **68***a*, **68***b* that form the ledges upon which the discharge ends **30** of input conveyors **24** may be mounted. Generally vertical side surfaces defined by upper side walls **70***a*, **70***b* extend upwardly from support walls **68***a*, **68***b*, respectively, with cross members **64** being mounted there between. Upper or top flanges **72***a*, **72***b* extend generally horizontally outwardly from side walls **70***a*, **70***b*, respectively, where outwardly and inwardly as used herein are intended to be relative to the central conveyance path of conveyor **22**. As best understood from FIG. **7**B, top flanges **72***a*, **72***b* form mounting surfaces to which panel members **58** are mounted, such as via threaded fasteners. Of note, both top flanges **72***a*, **72***b* and support walls **68***a*, **68***b* extend outwardly relative to side walls **70***a*, **70***b*, with support walls **68***a*, **68***b* having a greater length than top flanges **72***a*, **72***b* and thereby extending outwardly further than top flanges **72***a*, **72***b*.

Lower side walls **74***a*, **74***b* extend generally vertically downwardly from support walls **68***a*, **68***b*, respectively, at the edge of support walls **68***a*, **68***b* opposite the interconnection with upper side walls **70***a*, **70***b*. As shown, lower rollers **66** are mounted between lower side walls **74***a*, **74***b*. Bottom or lower flanges **76***a*, **76***b* extend generally horizontally outwardly from side walls **74***a*, **74***b*. As shown in FIGS. **1** and **2**A, supports or leg assemblies **78** are mounted to or joined with lower flanges **76***a*, **76***b* to elevate conveyor **22**.

By way of reference only and without limitation to the use of alternative sizes, orientations or constructions, in the illustrated embodiment support walls **68** have a horizontal length of approximately 2.75 inches, upper side walls **70** have a vertical length of approximately 6.5 inches, and lower side walls **74** have a vertical length of approximately 3.88 inches. Still further, top flanges **72** have a horizontal length of approximately 1.5 inches and bottom flanges have a horizontal length of approximately 1.86 inches.

Intermediate section **40** is shown in FIGS. **8** and **8**A to include side channels **50***a*, **50***b* with panel members **58***d*, **58***e* being mounted there between. Cross members **64** (one shown) and lower rollers **66** (one shown) extend between side channels **50***a*, **50***b*. It should be understood that multiple cross members **64** and lower rollers **66** are employed with main

conveyor **22**. As understood from FIG. **8**A, the cross-sectional profile of side channels **50***a*, **50***b* is substantially similar to that of side channels **48***a*, **48***b* discussed above. Thus, the support surfaces **28***a*, **28***b* are defined on side channels **50***a*, **50***b* as generally horizontal support walls **80***a*, **80***b* that form the ledges upon which the discharge ends **30** of input conveyors **24** may be mounted. Generally vertical side surfaces defined by upper side walls **82***a*, **82***b* extend upwardly from support walls **80***a*, **80***b*, respectively, with cross members **64** being mounted there between. Upper or top flanges **84***a*, **84***b* extend generally horizontally outwardly from side walls **82***a*, **82***b*, respectively, with top flanges **84***a*, **84***b* forming mounting surfaces to which panel members **58** are mounted. In like manner to side channels **48***a*, **48***b*, both top flanges **84***a*, **84***b* and support walls **80***a*, **80***b* extend outwardly relative to side walls **82***a*, **82***b*, with support walls **80***a*, **80***b* having a greater length than top flanges **84***a*, **84***b* and thereby extending outwardly further than top flanges **84***a*, **84***b*.

Lower side walls **86***a*, **86***b* extend generally vertically downwardly from support walls **80***a*, **80***b*, respectively, at the edge of support walls **80***a*, **80***b* opposite the interconnection with upper side walls **82***a*, **82***b*. As shown, lower rollers **66** are mounted between lower side walls **86***a*, **86***b*. Bottom or lower flanges **88***a*, **88***b* extend generally horizontally outwardly from side walls **86***a*, **86***b*, with supports **78** being mounted to lower flanges **88***a*, **88***b* to elevate conveyor **22**.

It should be appreciated end section **44** is substantially similar to end section **38**, and that intermediate section **42** is substantially similar to intermediate section **40**. As noted, however, the various sections may be of alternative lengths from that shown or relative to each other as needed for a given application. Still further, a main conveyor may be constructed that has more or fewer intermediate sections as needed. Moreover, although the various side channels **48**, **50**, **52**, **54** are shown in the illustrated embodiment as being formed as unitary members, it should also be appreciated that alternative constructions may be employed, such as forming from separate components.

Additional details regarding input conveyors **24***a*, **24***b*, **24***c* and **24***d* will now be discussed. Although FIGS. **1** and **2** disclose two input conveyors **24** on either side of main conveyor **22**, it should be appreciated that more or fewer input conveyors **24** may be provided on either side, including none, depending on the needs of a particular installation. Input conveyors **24***a*-**24***d* are shown to form acute angles with respect to the conveying orientation of main conveyor **22** as denoted by the arrow in FIG. **1**. Input conveyors, however, may connect at alternative angles to a main conveyor relative to that shown in FIG. **1** and/or input conveyors may include a conventional belt conveyor portion leading to a roller conveyor portion adjacent the main conveyor. Still further, due to the similarities of input conveyors **24***a*, **24***b*, **24***c*, **24***d* relative to each other in the illustrated embodiment, it should be appreciated that the following discussion will focus on the exemplary input conveyor **24***a* shown in FIG. **3**, where conveyors **24***b* and **24***d* comprise substantially mirror image structures relative to conveyor **24***a*.

Input conveyors **24** include a pair of side frame channels or rails **90**, **92**, with multiple rollers **94** extending there between, with the side rails **90**, **92** being supported on leg assemblies **95** to elevate input conveyors **24**. In the illustrated embodiment side rails **90**, **92** comprise generally C-shaped channel members. A cross rail **96** additionally extends in an angled or non-perpendicular orientation between side rails **90**, **92** at the ends of side rails **90**, **92** where conveyors **24** mount to main conveyor **22**, with cross rail **96** being shown in FIG. **3** between rollers **94** and shown in FIGS. **3**A, **5** and **6**. As shown in FIG. **3**A, cross rail **96** is constructed as a generally planar member in the illustrated embodiment with multiple angled tabs **97** located along an elongate upper edge of the cross rail **96**. One end of the forward most rollers **94** is mounted to each tab **97** to support the rollers there along. When mounted to conveyor **22**, cross rails **96** are positioned on or at support surfaces **28***a* or **28***b* of side frames **26***a*, **26***b*, while tabs **97** are positioned adjacent the top flanges of the side frames **26***a*, **26***b*, such as adjacent top flanges **72***a*, **72***b* of conveyor section **38** or top flanges **84***a*, **84***b* of conveyor section **40**. The rollers **94** connected to cross rail **96** may thus be positioned in close proximity to belt **32** of main conveyor. The conveying surface of the input conveyors **24** as defined by the vertically highest point of the rollers **94** is then slightly vertically elevated relative to the conveying surface or plane of belt **32**. It should also be appreciated that the input conveyors may include fewer rollers relative to that shown on conveyor **24**. For example, a roller conveyor input portion may only include the rollers connected between one side rail and the angled cross rail.

Discharge ends **30** of conveyors **24** include a bottom portion **98**, which in the embodiment shown includes a portion of the bottom surfaces of the lower flanges **100** of the ends of side rails **90**, **92**, and may include the bottom surface of cross rail **96**. As noted above, bottom portions **98** of the conveyors **24** are located on support surfaces **28***a*, **28***b* when joining input conveyors **24** with main conveyor **22**. In particular, the ends of the lower vertical leg portions defining the C-shaped side rails **90**, **92** may be mounted on support surfaces **28***a*, **28***b*. As such, surfaces **28***a*, **28***b* define a support for the ends of conveyors **24**. Moreover, the distance between surfaces **28***a*, **28***b* and the top flanges of the side frames, such as flanges **72***a*, **72***b* and **84***a*, **84***b* accurately define the elevation to the top surface **56** of the conveyor **22**. By correspondingly controlling the dimensions of the input conveyors **24**, such as the height of the C-shaped side rails **90**, **92** mounted on support surfaces **28***a*, **28***b*, the elevation of the belt **32** relative to the conveying surface of the input roller conveyors **24** can be accurately controlled.

As understood from FIGS. **5** and **6**, cross rail **96** is aligned with an edge **99** of main conveyor **22**, where in the illustrated embodiment edge **99** is defined by the edge of the top surface **56**, as defined by the panel members **58**, and in turn the edge of the side frames, such as first side frame **26***a*, by way of the top flange of the side channels, such as the edge of the top flange **72**, **84** of side channels **48**, **50**, respectively. As such, the conveying surface of input conveyors **24** is accurately aligned with and made in substantial proximity to the conveying surface of main conveyor **22** to thereby provide substantial continuity of the conveying surfaces and minimize the transition between the conveyors **22**, **24**. In the illustrated embodiment the conveying surfaces as defined between the belt **32** and rollers **94** are separated by approximately two inches. Moreover, the vertically highest point of rollers **94** is only slightly raised relative to the upper surface of belt **32**, such as approximately ⅛ inch, thereby minimizing the vertical drop experienced by items being conveyed from input conveyors **24** to belt conveyor **22**.

Input conveyors **24** are aligned at a non-perpendicular angle relative to main conveyor **22** with a sub-set of rollers **94***a* being provided that extend between side rail **92** and cross rail **96** and have progressively shorter axial lengths for delivering items from conveyor **24** to conveyor **22**. The rollers **94** may be powered or unpowered. Side rails **90**, **92** further include lower flanges **100** for receiving leg assemblies **95**.

Reference will now be made to FIGS. **1**-**6** in describing guard assembly **34**. Guard assembly **34** includes guard rails or

guard rail assemblies **110***a*, **110***b*, **110***c* along a first side of main conveyor **22**, and corresponding guard rail assemblies **110***d*, **110***e*, **110***f* along a second side of main conveyor **22**. Guard assembly **34** further includes guard rails or guard rail assemblies **112**, **114** located along the sides of input conveyors **24** that are connected with respective guard rail assemblies **110** of main conveyor **22**. Guard rail assemblies **110***a*, **110***b*, **110***c* are substantially similar to each other, as are guard rail assemblies **110***d*, **110***e*, **110***f*, but with varying lengths. Still further, guard rail assemblies **110***a*, **110***b*, **110***c* are substantially mirror image structures relative to guard rail assemblies **110***d*, **110***e*, **110***f*, respectively. As shown in FIG. **1**, openings **116** are formed in guard assembly **34** at the connection of input conveyors **24** with main conveyor **22**.

Due to the similarities of guard rail assemblies **110***a*-**110***f*, details regarding their construction will be made with reference to the exemplary cross sectional guard rail assembly **110** disclosed in FIG. **4**. Guard rail assembly **110** includes a guard member **118** formed as an elongate guard rail member **120** having a generally vertical guard surface **122** that functions to inhibit items being conveyed on belt **32** from falling off conveyor **22** if such items come into contact with surface **122**. Guard rail member **120** is mounted to conveyor **22**, and in particular is mounted to the side channels forming side frame **26**, by way of an upstanding member or bracket that is constructed as post **124** in the illustrated embodiment. Post **124** is mounted to side frame **26**, and in the embodiment shown is affixed by way of a threaded fastener **126** to a top flange **72** of side frame **26**. Guard rail assembly **110** further includes a guide member, which in the embodiment shown comprises a bearing or roller **36** mounted to post **124** such that the axis of rotation of roller **36** is perpendicularly oriented relative to the direction of travel of belt **32**. Multiple posts **124**, with rollers **36** mounted thereto, may be disposed along the two sides of the main conveyor **22** for supporting the guard member **118** vertically above top surface **56** and guiding belt **32**. Belt **32** is normally not in contact with rollers **36**, but should there be deflection in belt **32**, such as from a side load imparted thereto, belt **32** will contact rollers **36** for inhibiting belt **32** from mis-tracking.

As further understood from FIG. **4**, guard surface **122** is positioned above both top surface **56** and belt **32**, as well as inwardly relative to top surface **56** and the edge **130** of belt **32**. Both the edge **130** of top surface **56** and the edge **132** of belt **32** additionally extend outwardly beyond a plane defined by the upper side wall **70** of side frame **26**. Thus, discharge end **30** of an input conveyor **24** may be mounted in substantial proximity to belt **32** of conveyor **20** when assembled together, thereby aiding in the transition of items conveyed from input conveyors **24** onto main conveyor **22**. As also understood from FIG. **4**, guard rail members **120** include a fastener **134** that is received in or by a guard mount **136** that is secured on post **124** for retaining the guard rail member **120** in the desired position.

With further reference to FIGS. **3**, **5** and **6**, guard rail assemblies **112**, **114** on input conveyors **24** include guard rail members **138**, **140**, respectively, that are joined with the guard rail members **120** of the guard rail assemblies **110** on main conveyor **22** by way of a flared fender assembly **142** and a knuckle assembly **144**.

Reference is now made to FIGS. **9** and **10** regarding end pulley assemblies **62**. Each end pulley assembly **62** includes a top roller **150** and a bottom roller **152** mounted between support brackets **154**, **156**, with a pair of end guards **158** located at each bracket **154**, **156**. Four end adjusters **160** are provided corresponding to the two ends of top roller **150** and the two ends of bottom roller **152** for adjusting the squareness of the end pulley assembly **62** relative to the travel of belt **32** there over.

Top roller **150** is oriented vertically higher relative to bottom roller **152**. In particular, top roller **150** and bottom roller **152** have parallel axes of rotation with the axis of rotation of top roller **150** being positioned vertically higher than the axis of rotation of bottom roller **152**. As understood from FIG. **7**C, top roller **150** is vertically positioned relative to top surface **56** whereby during rotation of top roller **150** belt **32** exits or enters rotation about top roller **150** in substantially the plane in which the belt **32** moves for conveyance of items. Moreover, the axis of rotation of top roller **150** is positioned vertically higher than the axis of rotation of bottom roller **152** by an amount greater than the combined radii of top roller **150** and bottom roller **152**, thereby creating a space **162** (FIG. **10**) between top roller **150** and bottom roller **152**. With further reference to FIG. **7**C it is observed that top roller **150** extends outwardly further than bottom roller **152** relative to the plane in which belt **32** travels for conveyance of items, with top roller **150** being positioned outwardly further bottom roller **152** by an amount less than the combined radii of top roller **150** and bottom roller **152**.

As understood from FIG. **10**, belt **32** is spaced by a distance **164** when traveling about end pulley assembly **62**. It should be appreciated that if a single roller having a diameter equal to distance **164** were employed, the single roller would have a significantly greater radius than the radius of top roller **150**. Accordingly, if such an alternative conveyor were operatively aligned with another conveyor a significant gap would exist in the conveying plane of the two associated belts. In contrast, by utilizing a pair of rollers **150**, **152**, with the upper roller **150** having a smaller diameter than the distance **164**, the conveyor **22** may be operatively aligned with another conveyor to thereby minimize the gap in the conveying plane of the two associated belts.

Brackets **154**, **156** include mounting holes (not shown) for receiving top and bottom rollers **150**, **152**, with end adjusters **160** being mounted thereto. Brackets **154**, **156** further include flanges **170**, **172**, respectively, for connection with supports **78**. Although shown in connection with a merge assembly conveyor system, it should be appreciated that end pulley assemblies **62** may be employed with belt conveyors in alternative installations.

With reference now to FIGS. **1** and **11**, conveyor assembly **20** is shown in FIG. **1** to include endless conveyor belt **32** disposed on main conveyor **22**, as described above. As understood from FIG. **11**, belt **32** includes an upper or top layer **235** having a portion **237** that is formed from an alternative material relative to side portions **239***a*, **239***b* of top layer **235**. Portion **237** is constructed to provide a higher coefficient of friction relative to side portions **239***a*, **239***b* such that portion **237** operates to inhibit or stop the cross belt movement of items, such as packages, discharged from input conveyors **24** onto main conveyor **22**. In addition, portion **237** further aids in aligning incoming items on, at or about portion **237**. This occurs as a result of an incoming item being discharged onto belt **32** and the forward portion of the incoming item initially contacting portion **237** such that it is slowed or stopped relative to the rearward portion, which will then rotate as a result of its own inertia or momentum. Thus, portion **237** aids in inhibiting or preventing items from sliding beyond the center of belt **32** when they are input to or discharged onto belt **32**, as well as aligning items thereon. Belt **32** may advantageously be employed in high speed applications, such as when belt **32** travels greater than approximately 540 feet per minute.

Portion **237** is constructed to provide a higher coefficient of friction relative to side portions **239***a*, **239***b* such as by portion **237** being constructed with a greater portion of rubber based products relative to side portions **239***a*, **239***b*. Coefficient of friction is a comparative ratio of the friction between two bodies and their engagement force. Thus, as understood in the present description, center portion **237** is understood to provide a comparatively higher coefficient of friction relative to side portions **239***a*, **239***b*, such as with respect to the lateral movement of an item across belt **32** when discharged onto belt **32**. Alternatively expressed, the surface of portion **237** provides greater frictional surface resistance compared to the surfaces of side portions **239***a*, **239***b*. In the illustrated embodiment, for example, the coefficient of friction (μ) for portion **237** is approximately 1.2 relative to cardboard the coefficient of friction (μ) for side portions **239***a*, **239***b* is approximately 0.25 relative to cardboard. It should be understood, however, that alternatively constructed belts may be provided wherein the different sections provide higher or lower surface friction relative to those of belt **32**.

In the illustrated embodiment belt **32** comprises a multi-layer belt, with belt **32** being constructed as a three-ply belt having a middle layer **241** and a lower or bottom layer **243** in addition to top layer **237**. Bottom layer **243** is constructed to provide less surface resistance than portion **237** to promote movement of belt **32** over the slider bed top surface **56** of belt conveyor **22**.

Portion **237** is shown as a central or middle portion relative to side portions **239***a*, **239***b* in the embodiment shown in FIG. **11**, but could alternatively be disposed toward or at one side or the other of belt **32**. Belt **32** may be constructed by removing a portion of the top layer of a belt initially having a unitary top layer, and inserting into the removed area portion **237**. Portion **237** may then be vulcanized to middle layer **241** and adjacent side portions **239***a*, **239***b* that remain from the initial unitary top layer. A belt having a multi portion upper layer with differing frictional surface resistances, such as belt **32**, may be constructed in varying sized and configurations. For example, portion **237** may be constructed to be in the range of approximately six to eight inches in width relative to the lateral orientation of belt **32**, where belt **32** may have an overall width of, for example, 32 or 38 inches. It should be further understood that alternative belts may be used with conveyor assembly **20**, and that belts constructed in accordance with belt **32** may be used on alternative conveyor assemblies.

The conveyor assembly **20** enables input conveyors **24** to be accurately mounted in close proximity to the main conveyor **22**, by way of the side frames **26***a*, **26***b* having support surfaces **28***a*, **28***b*, thereby promoting the conveyance of items form the input conveyors **24** onto the main conveyor **22**. As understood with reference to the illustrated embodiment, the side frames **26***a*, **26***b* are configured from multiple elongate side channels having the support surface integrally formed therein. Moreover, a belt conveyor configured with the end pulley assemblies in accordance with another aspect of the invention enables the conveyor to be axially aligned with another conveyor with a minimized gap in the conveying plane of the conveyors.

Changes and modifications in the specifically described embodiments can be carried out without departing from the principles of the present invention which is intended to be limited only by the scope of the appended claims, as interpreted according to the principles of patent law including the doctrine of equivalents.

The embodiments of the invention in which an exclusive property or privilege is claimed are defined as follows:

1. A conveyor assembly, said conveyor assembly comprising:

a main conveyor comprising a belt conveyor having a top surface and a belt with said belt having a first edge and a second edge defining a width of said belt and being moveable over said top surface, said main conveyor further comprising a first side frame and a second side frame, said first side frame including a side portion and a support surface, said support surface extending laterally outward beyond an edge of said top surface with said side portion extending upwardly relative to said support surface, wherein said first side frame further includes a generally horizontally oriented flange located above said side portion, and wherein said top surface extends over said flange; and

an input conveyor defining a conveying surface and having a discharge end;

said input conveyor being mounted to said first side frame of said main conveyor with said discharge end positioned on said support surface.

2. The conveyor assembly of claim **1**, wherein said discharge end of said input conveyor includes a bottom portion, and wherein said bottom portion is positioned on said support surface.

3. The conveyor assembly of claim **2**, wherein said input conveyor includes a pair of side rails and said side rails include said bottom portion.

4. The conveyor assembly of claim **1**, wherein said support surface comprises a support wall defining a ledge.

5. The conveyor assembly of claim **4**, wherein said ledge comprises an elongate ledge and said support surface is generally horizontally oriented.

6. The conveyor assembly of claim **4**, wherein said side portion comprises a side wall with said side wall being oriented generally orthogonally relative to said support wall.

7. The conveyor assembly of claim **1**, wherein said flange extends outwardly relative to said side portion and said top surface extends outwardly beyond a plane defined by said side portion of said first side frame.

8. The conveyor assembly of claim **7**, wherein said first edge of said belt extends outwardly beyond a plane defined by said side portion of said first side frame.

9. The conveyor assembly of claim **1**, wherein said first side frame comprises a plurality of elongate side channels.

10. The conveyor assembly of claim **1**, wherein said input conveyor comprises a roller conveyor oriented at a non-perpendicular angle relative to said main conveyor with said discharge end including a first side rail and a second side rail with a plurality of rollers with progressively shorter axial lengths extending between said first side rail and said second side rail.

11. The conveyor assembly of claim **1**, further including a guard assembly mounted at and extending with said first side frame, said guard assembly including an opening at said discharge end of said input conveyor, with said guard assembly including a guard member located inwardly above said top surface of said main conveyor and inwardly above said first edge of said belt.

12. The conveyor assembly of claim **11**, wherein said guard assembly further includes a guide member against which said first edge of said belt can contact.

13. The conveyor assembly of claim **1**, wherein said second side frame includes a side portion and a support surface, said support surface of said second side frame extending laterally outward beyond an opposite edge of said top surface with said side portion of said second side frame extending upwardly relative to said support surface of said second side frame, and

wherein said support surface of said second side frame is configured to have a discharge end of another input conveyor positioned thereon.

14. The conveyor assembly of claim **1**, wherein said belt has a first portion joined together with a second portion, with said first portion and said second portion comprising a conveying surface configured to support items for conveyance on said main conveyor, and wherein said first portion provides greater frictional surface resistance than said second portion.

15. The conveyor assembly of claim **14**, wherein said belt further includes a third portion joined together with said first portion, and wherein said first portion provides greater frictional surface resistance than said third portion and wherein said first portion is located between said third and second portions.

16. The conveyor assembly of claim **14**, wherein said belt comprises a multi-layer belt having a top layer and a second layer beneath said top layer with said top layer comprising said first portion and said second portion.

17. The conveyor assembly of claim **1**, wherein said main conveyor includes an input end and a discharge end, and wherein at least one of said input end and said discharge end include an end pulley assembly around which said belt travels to enable said belt to travel in a direction opposite that from which it enters said end pulley assembly, and wherein said end pulley assembly comprises a top roller and a bottom roller having parallel axes of rotation with the axis of rotation of said top roller being positioned vertically higher than the axis of rotation of said bottom roller.

18. The conveyor assembly of claim **1**, wherein said top surface defines a slider bed comprising one or more panel members.

19. A conveyor assembly, said conveyor assembly comprising:

a main conveyor comprising a belt conveyor having a top surface and a moveable belt with said belt having a first edge and a second edge defining a width of said belt and being moveable over said top surface, said main conveyor further comprising a first side frame and a second side frame, said first side frame including a side portion and a support surface, said support surface comprising a wall defining a ledge extending laterally outward beyond an edge of said top surface with said side portion extending upwardly relative to said support surface, wherein said first side frame further includes a generally horizontally oriented flange located above said side portion, and wherein said top surface extends over said flange; and

an input conveyor defining a conveying surface and having a discharge end with said discharge end including a bottom portion;

said input conveyor being mounted to said first side frame of said main conveyor with said bottom portion of said discharge end positioned on said ledge of said support surface.

20. The conveyor assembly of claim **19**, wherein said support wall comprises an elongate ledge and is generally horizontally oriented, and said side portion comprises a side wall with said side wall being oriented generally orthogonally relative to said support wall.

21. The conveyor assembly of claim **20**, wherein said input conveyor includes a pair of side rails and said side rails include said bottom portion.

22. The conveyor assembly of claim **19**, wherein said second side frame includes a side portion and a support surface, said support surface of said second side frame comprising a wall defining a ledge extending laterally outward beyond an opposite edge of said top surface with said side portion of said second side frame extending upwardly relative to said support surface of said second side frame, and wherein said ledge of said second side frame is configured to have a discharge end of another input conveyor positioned thereon.

23. A conveyor assembly, said conveyor assembly comprising:

a main conveyor having a first side frame and a second side frame, said first side frame including a side portion and a support surface, wherein said support surface comprises a support wall defining a ledge and said side portion comprises a side wall, wherein said main conveyor comprises a belt conveyor and includes a top surface and a moveable belt with said top surface extending between said first side frame and said second side frame and said belt being moveable over said top surface and having a first edge and a second edge defining a width of said belt, and wherein said support surface is vertically lower than said top surface and extends outwardly from said first side frame beyond said top surface, wherein said first side frame further includes a flange located above said side portion, and wherein said top surface extends over said flange; and

an input conveyor having a discharge end, said discharge end including a bottom portion;

said discharge end of said input conveyor being mounted to said first side frame of said main conveyor with said bottom portion positioned on said ledge, wherein said input conveyor comprises a roller conveyor oriented at a non-perpendicular angle relative to said main conveyor with said discharge end including a first side rail and a second side rail with a plurality of rollers with progressively shorter axial lengths extending between said first side rail and said second side rail.

24. A conveyor assembly, said conveyor assembly comprising:

a main conveyor comprising a belt conveyor having a top surface and a belt with said belt having a first edge and a second edge defining a width of said belt and being moveable over said top surface, said main conveyor further comprising a first side frame and a second side frame; and

an input conveyor defining a conveying surface and having a discharge end;

said input conveyor being configured to deliver items to said belt conveyor;

wherein said belt has a first portion joined together with a second portion, with said first portion and said second portion comprising a conveying surface configured to support items for conveyance on said main conveyor, and wherein said first portion provides greater frictional surface resistance than said second portion.

25. The conveyor assembly of claim **24**, wherein said belt comprises a multi-layer belt having a top layer and a second layer beneath said top layer with said top layer comprising said first portion and said second portion.

26. The conveyor assembly of claim **24**, wherein said belt further includes a third portion joined together with said first portion, and wherein said first portion provides greater frictional surface resistance than said third portion and wherein said first portion is located between said third and second portions.

27. The conveyor assembly of claim **26**, wherein said belt comprises a multi-layer belt having a top layer and a second layer beneath said top layer with said top layer comprising said first portion and said second portion and said third portion.

28. The conveyor assembly of claim **26**, wherein said second portion and said third portion comprise side portions, and wherein said first portion comprises a middle portion, and wherein one of said side portions define said first edge of said belt and the other said side portion defines said second edge of said belt.

29. The conveyor assembly of claim **24**, wherein said top surface defines a slider bed comprising one or more panel members.

30. The conveyor assembly of claim **24**, wherein said second portion comprises a side portion with said side portion defining one of said first edge or said second edge of said belt.

31. A conveyor assembly, said conveyor assembly comprising:

a main conveyor comprising a belt conveyor having a top surface and a belt with said belt having a first edge and a second edge defining a width of said belt and being moveable over said top surface, said main conveyor further comprising a first side frame and a second side frame;

an input conveyor defining a conveying surface and having a discharge end, said input conveyor being configured to deliver items to said belt conveyor; and

a guard assembly mounted at and extending with said first side frame, said guard assembly including an opening at said discharge end of said input conveyor, with said guard assembly including a guard member located inwardly above said top surface of said main conveyor and inwardly above said first edge of said belt, wherein said guard assembly further includes a guide member against which said first edge of said belt can contact.

32. The conveyor assembly of claim **31**, wherein said guide member comprises a roller having an axis of rotation that is perpendicularly oriented relative to the direction of travel of said belt.

* * * * *