US009271224B2

(12) **United States Patent**
Goto

(10) **Patent No.: US 9,271,224 B2**
(45) **Date of Patent: *Feb. 23, 2016**

(54) **COMMUNICATION APPARATUS, AND COMMUNICATION METHOD THEREFOR**

(71) Applicant: **CANON KABUSHIKI KAISHA**, Tokyo (JP)

(72) Inventor: **Fumihide Goto**, Naka-gun (JP)

(73) Assignee: **Canon Kabushiki Kaisha**, Tokyo (JP)

(*) Notice: Subject to any disclaimer, the term of this patent is extended or adjusted under 35 U.S.C. 154(b) by 0 days.

This patent is subject to a terminal disclaimer.

(21) Appl. No.: **14/017,970**

(22) Filed: **Sep. 4, 2013**

(65) **Prior Publication Data**

US 2014/0003291 A1 Jan. 2, 2014

Related U.S. Application Data

(63) Continuation of application No. 12/867,614, filed as application No. PCT/JP2009/000369 on Jan. 30, 2009, now Pat. No. 8,553,556.

(30) **Foreign Application Priority Data**

Feb. 19, 2008 (JP) 2008-037416

(51) **Int. Cl.**
H04W 48/16 (2009.01)
H04W 8/00 (2009.01)
H04W 8/24 (2009.01)

(52) **U.S. Cl.**
CPC ***H04W 48/16*** (2013.01); ***H04W 8/005*** (2013.01); *H04W 8/24* (2013.01)

(58) **Field of Classification Search**
None
See application file for complete search history.

(56) **References Cited**

U.S. PATENT DOCUMENTS

8,302,166	B2 *	10/2012	Balakrishnan et al.	726/5
8,553,556	B2 *	10/2013	Goto	370/236
2003/0065757	A1 *	4/2003	Mentze et al.	709/222
2003/0179742	A1 *	9/2003	Ogier et al.	370/351
2003/0179750	A1 *	9/2003	Hasty et al.	370/390
2006/0092861	A1 *	5/2006	Corday et al.	370/256
2007/0043844	A1 *	2/2007	Sakai	709/223
2007/0189192	A1 *	8/2007	Kim	370/255
2007/0265009	A1 *	11/2007	Hamaguchi	455/436
2007/0274274	A1	11/2007	Carothers	
2008/0037444	A1	2/2008	Chhabra	
2009/0080390	A1 *	3/2009	Zhou et al.	370/338
2010/0228868	A1 *	9/2010	Sakai	709/228

FOREIGN PATENT DOCUMENTS

JP	2002-159053	A	5/2002
WO	2004-095778	A1	11/2004
WO	2008-050815	A2	5/2008

* cited by examiner

Primary Examiner — Donald Mills
(74) *Attorney, Agent, or Firm* — Canon USA, Inc. IP Division

(57) **ABSTRACT**

In order to prevent a communication-parameter automatic setting process from being performed by unintended communication apparatuses, a communication terminal having detected a plurality of communication-parameter providing apparatuses sends a notification indicating that the plurality of providing apparatuses exist to another terminal.

12 Claims, 7 Drawing Sheets

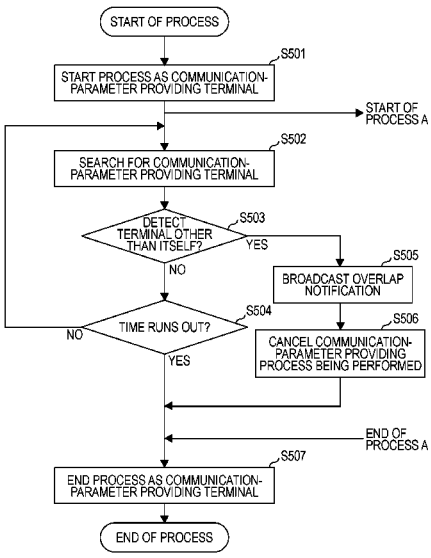

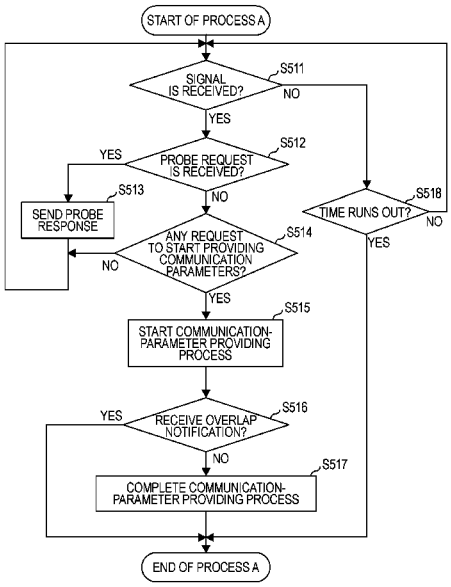

FIG. 1

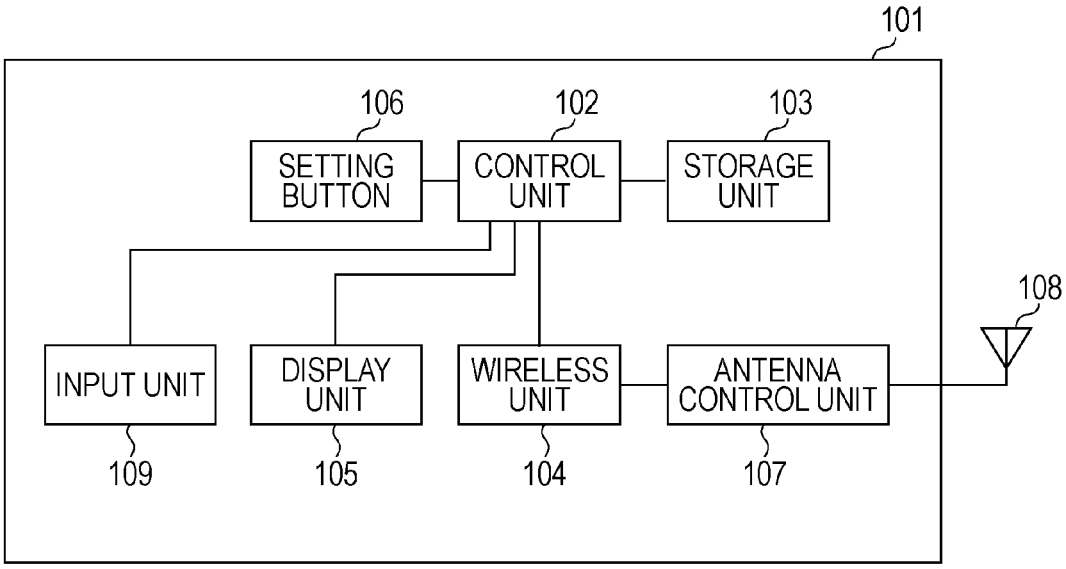
101
106
102
103
SETTING BUTTON
CONTROL UNIT
STORAGE UNIT
108
INPUT UNIT
DISPLAY UNIT
WIRELESS UNIT
ANTENNA CONTROL UNIT
109
105
104
107

FIG. 2

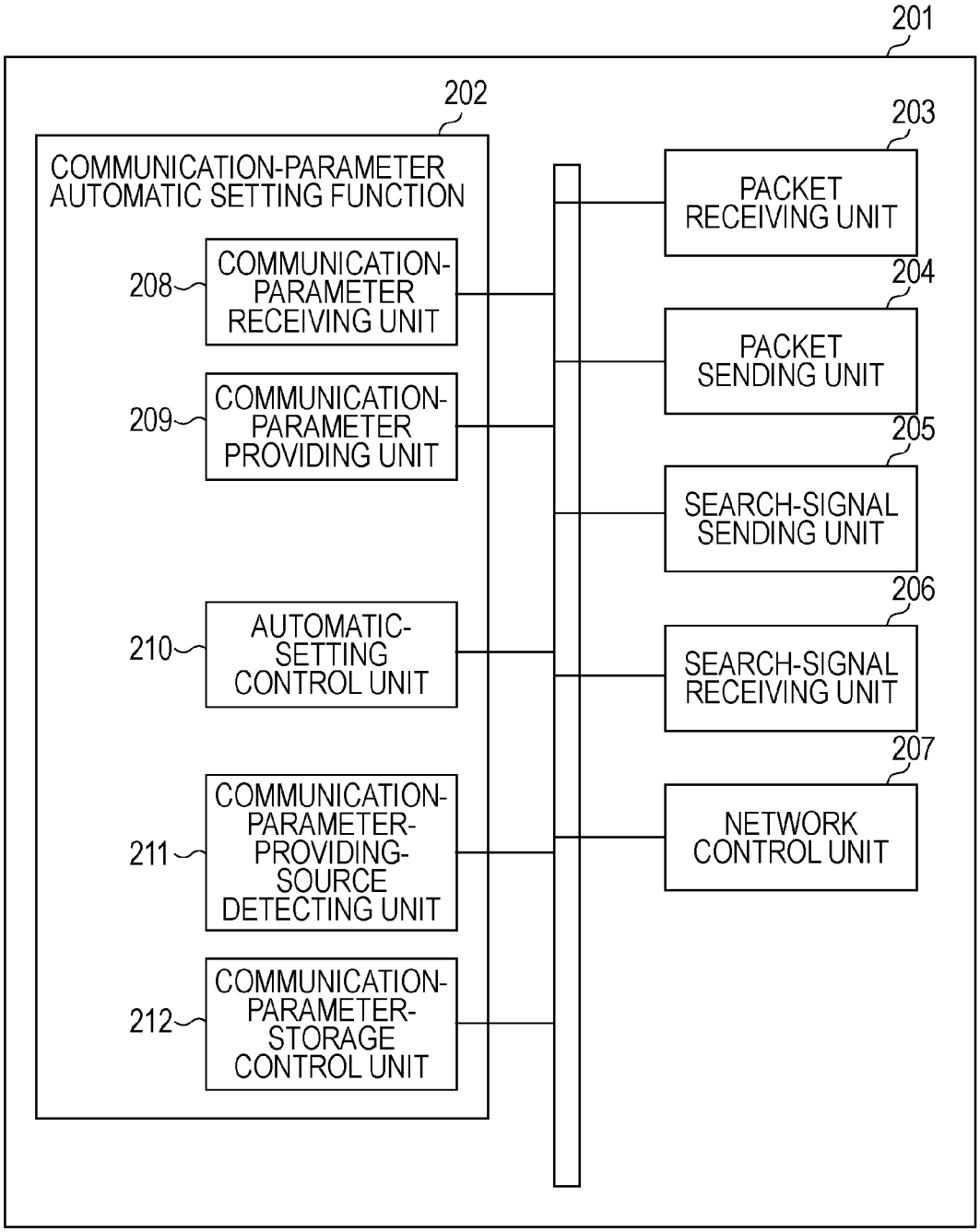
201
202
COMMUNICATION-PARAMETER AUTOMATIC SETTING FUNCTION
208
COMMUNICATION-PARAMETER RECEIVING UNIT
209
COMMUNICATION-PARAMETER PROVIDING UNIT
210
AUTOMATIC-SETTING CONTROL UNIT
211
COMMUNICATION-PARAMETER-PROVIDING-SOURCE DETECTING UNIT
212
COMMUNICATION-PARAMETER-STORAGE CONTROL UNIT
203
PACKET RECEIVING UNIT
204
PACKET SENDING UNIT
205
SEARCH-SIGNAL SENDING UNIT
206
SEARCH-SIGNAL RECEIVING UNIT
207
NETWORK CONTROL UNIT

FIG. 3

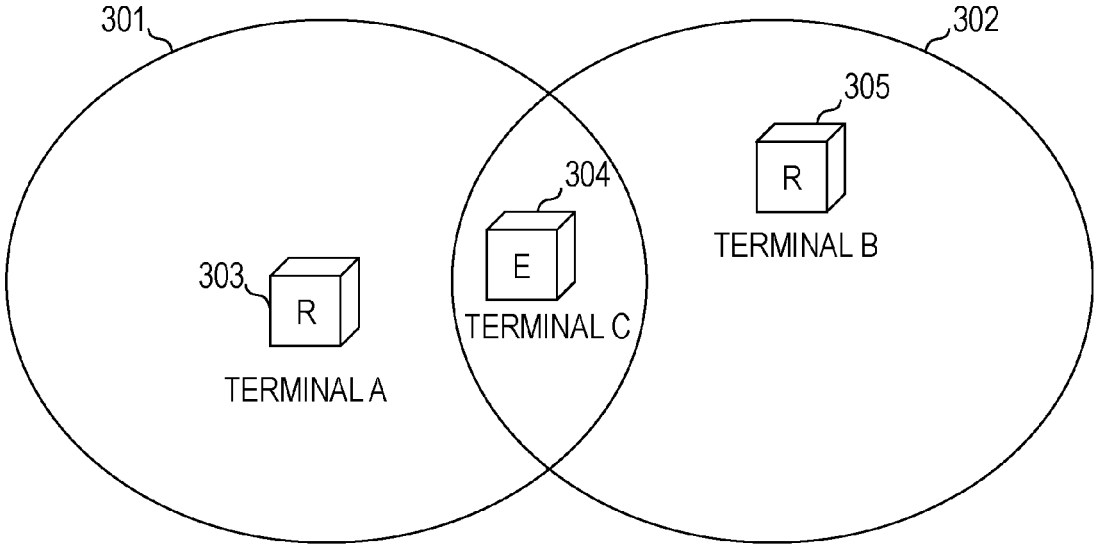

FIG. 4

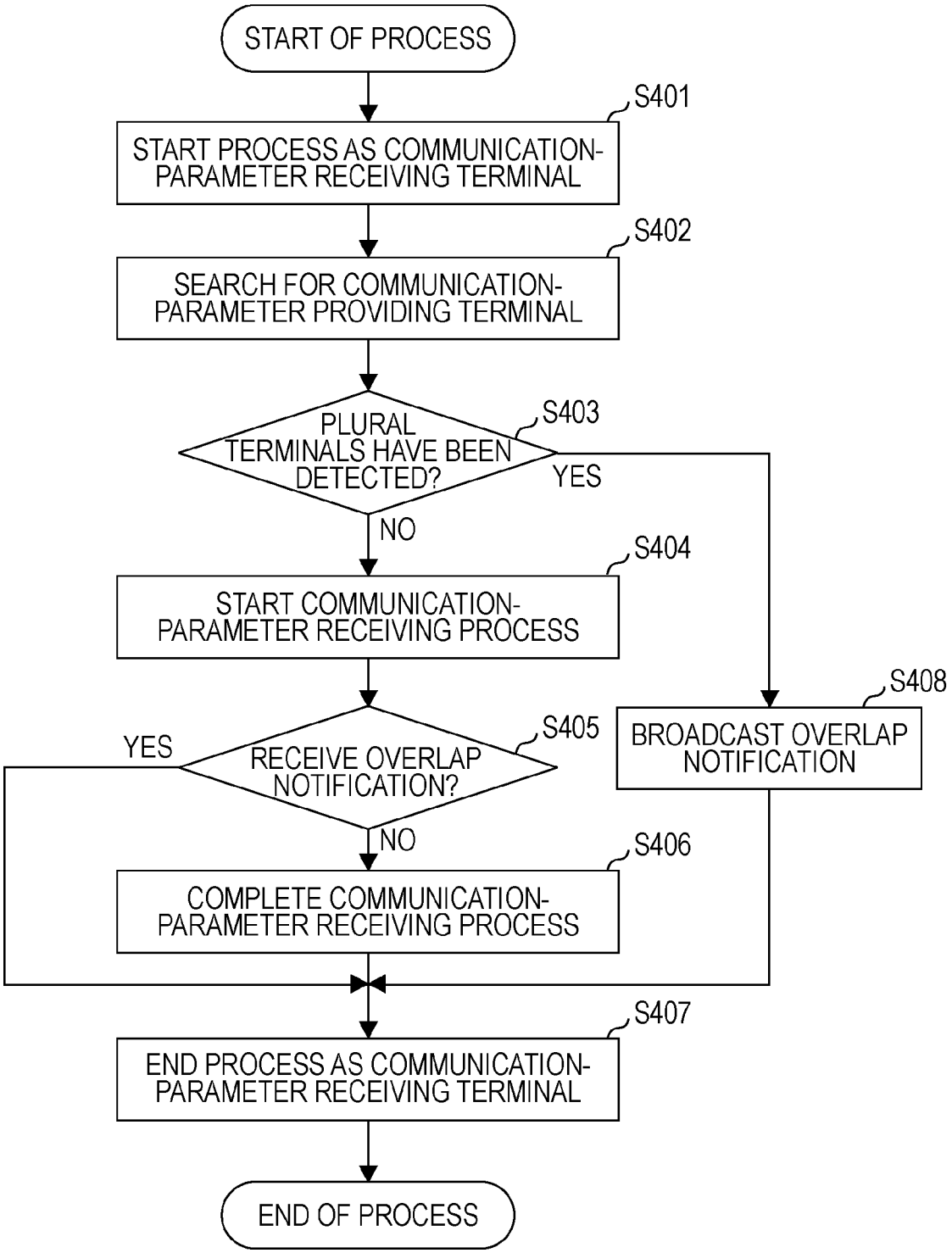
START OF PROCESS
S401
START PROCESS AS COMMUNICATION-PARAMETER RECEIVING TERMINAL
S402
SEARCH FOR COMMUNICATION-PARAMETER PROVIDING TERMINAL
S403
PLURAL TERMINALS HAVE BEEN DETECTED?
YES
NO
S404
START COMMUNICATION-PARAMETER RECEIVING PROCESS
S408
BROADCAST OVERLAP NOTIFICATION
S405
RECEIVE OVERLAP NOTIFICATION?
YES
NO
S406
COMPLETE COMMUNICATION-PARAMETER RECEIVING PROCESS
S407
END PROCESS AS COMMUNICATION-PARAMETER RECEIVING TERMINAL
END OF PROCESS

FIG. 5A

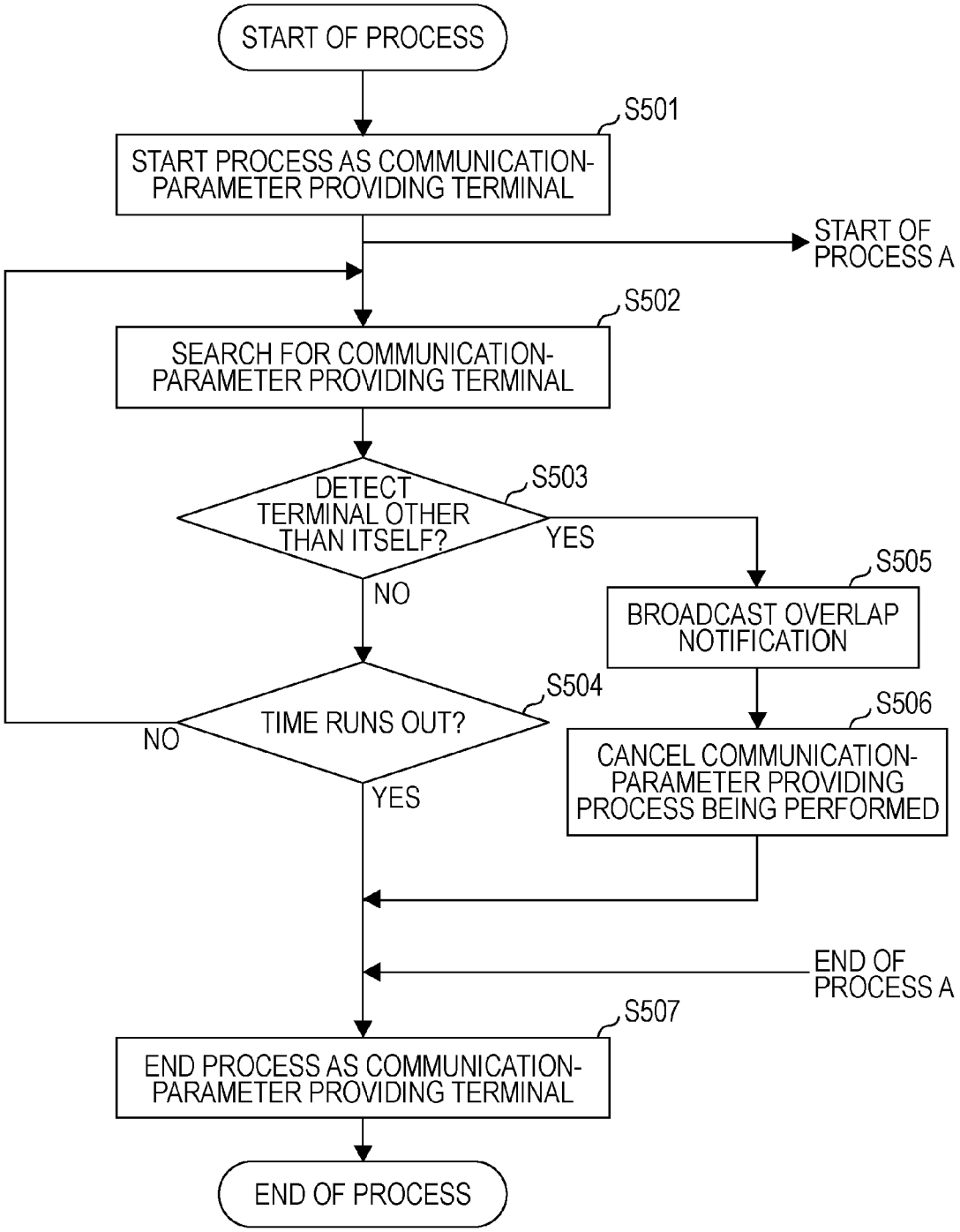
START OF PROCESS
S501
START PROCESS AS COMMUNICATION-PARAMETER PROVIDING TERMINAL
START OF PROCESS A
S502
SEARCH FOR COMMUNICATION-PARAMETER PROVIDING TERMINAL
S503
DETECT TERMINAL OTHER THAN ITSELF?
YES
NO
S505
BROADCAST OVERLAP NOTIFICATION
S504
TIME RUNS OUT?
NO
YES
S506
CANCEL COMMUNICATION-PARAMETER PROVIDING PROCESS BEING PERFORMED
END OF PROCESS A
S507
END PROCESS AS COMMUNICATION-PARAMETER PROVIDING TERMINAL
END OF PROCESS

FIG. 5B

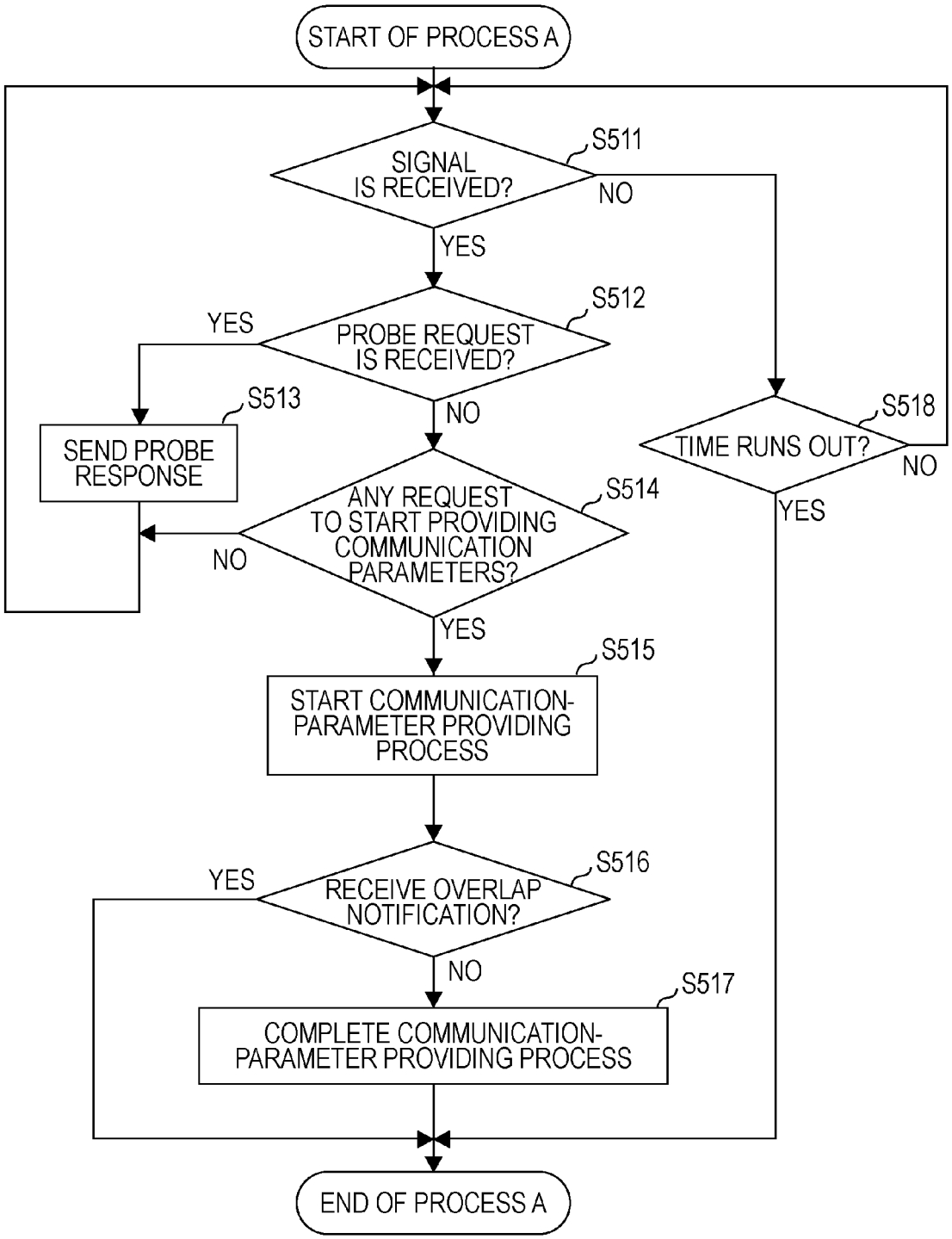
START OF PROCESS A
SIGNAL IS RECEIVED?
S511
NO
YES
PROBE REQUEST IS RECEIVED?
S512
YES
NO
SEND PROBE RESPONSE
S513
TIME RUNS OUT?
S518
NO
YES
ANY REQUEST TO START PROVIDING COMMUNICATION PARAMETERS?
S514
NO
YES
START COMMUNICATION-PARAMETER PROVIDING PROCESS
S515
RECEIVE OVERLAP NOTIFICATION?
S516
YES
NO
COMPLETE COMMUNICATION-PARAMETER PROVIDING PROCESS
S517
END OF PROCESS A

FIG. 6

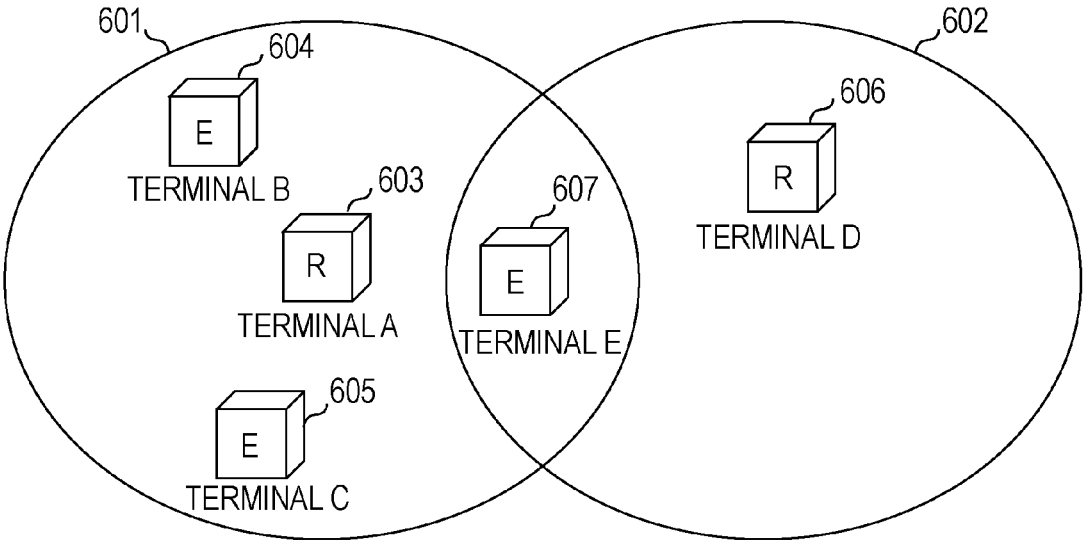
601
602
604
E
TERMINAL B
603
R
TERMINAL A
605
E
TERMINAL C
607
E
TERMINAL E
606
R
TERMINAL D

COMMUNICATION APPARATUS, AND COMMUNICATION METHOD THEREFOR

CROSS REFERENCE TO RELATED APPLICATIONS

The present application is a continuation of U.S. patent application Ser. No. 12/867,614, filed on Aug. 13, 2010, which is National Stage Entry of International Application No. PCT/JP2009/000369, filed Jan. 30, 2009, which claims priority from Japanese Patent Application No. 2008-037416, filed Feb. 19, 2008, all of which are hereby incorporated by reference herein in their entirety.

BACKGROUND OF THE INVENTION

1. Field of the Invention

The present invention relates to techniques of setting communication parameters.

2. Background Art

In wireless communication represented by wireless local area networks (LANs) conforming to the IEEE 802.11 standard series, there are many setting items that must be set prior to use.

For example, as setting items, there are communication parameters needed to perform wireless communication, such as the Service Set Identifier (SSID) which is a network identifier, an encryption method, an encryption key, an authentication method, and an authentication key. It is very complicated for the user to manually enter and set these communication parameters.

Therefore, various manufacturers have devised automatic setting methods for easily setting communication parameters in wireless devices. In these automatic setting methods, one device provides communication parameters to another device connected thereto using a procedure and messages determined in advance between these connected devices, and accordingly the communication parameters are automatically set.

Non Patent Citation 1 discloses an example of automatically setting communication parameters. In this example where automatic setting is performed, there are two methods, one involving the user to enter an authentication code to a device (hereinafter called an authentication code method), and the other not involving the user to enter an authentication code (hereinafter called a non-authentication code method) (see Non Patent Citation 1 for details).

Non Patent Citation 1: Wi-Fi CERTIFIED™ for Wi-Fi Protected Setup: Easing the User Experience for Home and Small Office Wi-Fi® Networks, www.wi-fi.org/wp/wifi-protected-setup

The authentication code method performs an authentication process between devices using the entered authentication code. If the authentication process is successful, one device provides communication parameters to the other device, and the other device receives the communication parameters. In this case, the devices can securely share the communication parameters by performing the authentication process.

In the non-authentication code method, when a device starting a communication-parameter automatic setting process is detected, communication parameters are automatically provided to the detected device. An example of the non-authentication code method is a method of starting a setting process in response to pressing of a setting start button provided in a device and performing automatic setting with another device that has similarly started a setting process during the setting process (hereinafter called a button pressing method). The non-authentication code method is inferior to the authentication code method in security. However, since the user need not enter the authentication code, the non-authentication code is advantageous in that the operation becomes easier.

As has been described above, the button pressing method automatically sets communication parameters simply by pressing the setting start button provided in a device. Therefore, the button pressing method is suitable for built-in devices with poor user interfaces.

However, when the users of a plurality of devices press the setting start buttons almost at the same time, depending on the positional relationship among the devices, communication parameters may be automatically set in unintended devices.

DISCLOSURE OF INVENTION

The present invention provides a technique of determining whether there exist a plurality of providing apparatuses that provide a communication parameter, and, when it is determined that the plurality of providing apparatuses exist, sending a notification indicating that the plurality of providing apparatuses exist to another communication apparatus.

According to the present invention, when a plurality of providing apparatuses that provide a communication parameter exist, a notification of this information can be sent to another communication apparatus. Therefore, for example, when the communication apparatus having received the notification cancels a communication-parameter setting process, a communication parameter can be prevented from being set in unintended communication apparatuses.

Further features of the present invention will become apparent from the following description of exemplary embodiments with reference to the attached drawings.

BRIEF DESCRIPTION OF THE DRAWINGS

The accompanying drawings, which are incorporated in and constitute a part of the specification, illustrate embodiments of the invention and, together with the description, serve to explain the principles of the invention.

FIG. **1** is a block diagram of a terminal.

FIG. **2** is a software functional block diagram of the interior of the terminal according to an embodiment of the present invention.

FIG. **3** is a network diagram according to the embodiment (part 1).

FIG. **4** is a flowchart showing an operation of a communication-parameter receiving terminal according to the embodiment.

FIG. **5**A is a flowchart showing an operation of a communication-parameter providing terminal according to the embodiment.

FIG. **5**B is a flowchart showing an operation of the communication-parameter providing terminal according to the embodiment.

FIG. **6** is a network diagram according to the embodiment (part 2).

BEST MODE FOR CARRYING OUT THE INVENTION

Preferred embodiments of the present invention will now be described in detail in accordance with the accompanying drawings.

First Embodiment

A wireless communication apparatus according to an embodiment of the present invention will now herein be

described in detail with reference to the drawings. Although the following description concerns an example in which a wireless LAN system conforming to the IEEE 802.11 series is used, the communication configuration is not necessarily limited to a wireless LAN conforming to IEEE 802.11.

An exemplary hardware configuration according to the embodiment will be described.

FIG. **1** is a block diagram showing an exemplary structure of each terminal, which will be described later, according to the embodiment of the present invention.

FIG. **1** shows the entirety of a terminal **101**. A control unit **102** controls the entire terminal **101** by executing a control program stored in a storage unit **103**. The control unit **102** additionally controls setting of communication parameters with another terminal.

The storage unit **103** stores the control program executed by the control unit **102** and various items of information, such as communication parameters. Various operations described later are performed by executing, with the control unit **102**, the control program stored in the storage unit **103**.

A wireless unit **104** performs wireless communication. A display unit **105** performs various displays. The display unit **105** has a function of outputting information in a visually recognizable manner, as in a liquid crystal display (LCD) or a light-emitting diode (LED), or a function of outputting sounds, as in a loudspeaker.

A setting button **106** is used for triggering or starting a communication-parameter automatic setting process. By detecting an operation entered by a user using the setting button **106**, the control unit **102** starts a communication-parameter automatic setting process, which will be described later.

An antenna control unit **107** controls an antenna **108**. An input unit **109** is operated to enter an authentication code for use in a communication-parameter automatic setting process. The entered authentication code is stored in the storage unit **103**.

FIG. **2** is a block diagram showing the configuration of a software functional block executed by a terminal that provides a communication-parameter setting operation function, which will be described later, according to the embodiment of the present invention. A control program for controlling this software structure is stored in the storage unit **103**. When the control unit **102** executes the control program, operations of functions of the software structure are performed.

FIG. **2** shows the entirety of a terminal **201**. The terminal **201** includes a communication-parameter automatic setting function block **202**. In this embodiment, automatic setting of communication parameters needed to perform wireless communication, such as the SSID which is a network identifier, an encryption method, an encryption key, an authentication method, and an authentication key, is performed. In this embodiment, there are two types of communication-parameter automatic setting methods, namely, the authentication code method and the non-authentication code method.

A packet receiving unit **203** receives packets related to various communications. A packet sending unit **204** sends packets related to various communications.

A search-signal sending unit **205** controls sending of a device search signal, such as a probe request. A probe request may be a network search signal for searching for a desired network. Sending of a probe request, which will be described later, is performed by the search-signal sending unit **205**. Also, sending of a probe response, which is a response signal in response to the received probe request, is performed by the search-signal sending unit **205**.

A search-signal receiving unit **206** controls receiving of a device search signal, such as a probe request, from another terminal. Receiving of a probe request, which will be described later, is performed by the search-signal receiving unit **206**. Also, receiving of a probe response is performed by the search-signal receiving unit **206**. Various items of information (self-information) of the sending source device are added to a device search signal and a response signal in response thereto.

A network control unit **207** controls a network connection. Participation into a wireless LAN ad-hoc network, which will be described later, is performed by the network control unit **207**.

In the communication-parameter automatic setting function block **202**, a communication-parameter receiving unit **208** performs a process of receiving communication parameters from a partner device, and a communication-parameter providing unit **209** performs a process of providing communication parameters to a partner device.

An automatic-setting control unit **210** controls various protocols in a communication-parameter automatic setting process. A communication-parameter automatic setting process, which will be described later, is performed by the communication-parameter receiving unit **208** and the communication-parameter providing unit **209** under control of the automatic-setting control unit **210**.

A communication-parameter-providing-source detecting unit **211** detects a terminal that provides communication parameters (hereinafter called a providing terminal). A providing-terminal search process, which will be described later, is performed by the communication-parameter-providing-source detecting unit **211**. The communication-parameter-providing-source detecting unit **211** detects a providing terminal that exists on a network on the basis of the foregoing self-information of the device, which is obtained by the search-signal sending unit **205** and the search-signal receiving unit **206**.

When the terminal **201** operates as a communication-parameter providing terminal, a communication-parameter-storage control unit **212** reads communication parameters to be provided from the storage unit **103**. When the terminal **201** operates as a terminal that receives communication parameters from a providing terminal (hereinafter called a receiving terminal), the communication-parameter-storage control unit **212** writes the provided communication parameters into the storage unit **103**.

FIG. **3** is a diagram showing a terminal A**303** (hereinafter called a terminal A), a terminal B**305** (hereinafter called a terminal B), and a terminal C**304** (hereinafter called a terminal C). All these terminals have an IEEE 802.11 wireless LAN communication network function and perform wireless communication by performing wireless LAN ad-hoc (hereinafter called ad-hoc) communication. These terminals have the foregoing configurations shown in FIGS. **1** and **2**.

An ad-hoc network **301** is configured by communication parameters managed by the terminal A. An ad-hoc network **302** is configured by communication parameters managed by the terminal B.

The terminal C is located at a place where a communication area of the network **301** overlaps a communication area of the network **302**. Therefore, the terminal C can receive wireless signals both from the terminal A and the terminal B. In this example, the terminal C is about to receive communication parameters from the terminal A and to participate into the network **301** by executing a communication-parameter automatic setting process.

In this embodiment, the case in which the button pressing method is used as the non-authentication code method will be described by way of example. In the button pressing method, communication parameters are provided if, when the setting button **106** is operated in one terminal, the setting button **106** is operated in another terminal within a predetermined time from when the setting button **106** in the former terminal is operated. The following example concerns the case in which, within a predetermined time from when the setting button **106** is operated in the terminal C, the setting buttons **106** are operated in both the terminals A and B.

When each terminal starts a communication-parameter automatic setting process, each terminal determines whether to operate as a providing terminal or a receiving terminal of communication parameters in accordance with a predetermined method. When the role of each terminal is determined, communication parameters are provided from a providing terminal to a receiving terminal. In this example, it is assumed that the terminals A and B operate as providing terminals, and the terminal C operates as a receiving terminal. The automatic setting method described in Non Patent Citation 1 above calls a providing terminal "Registrar" and a receiving terminal "Enrollee". Therefore, in FIG. **3**, the providing terminals A and B are denoted by R, and the receiving terminal C is denoted by E.

When a setting process is started using the pressing button method in the positional relationship shown in FIG. **3**, the terminal C may receive communication parameters not from the terminal A, but from the terminal B. Therefore, in this embodiment, a method of preventing a communication-parameter automatic setting process from being performed by unintended terminals will be described.

FIG. **4** is a flowchart of the operation of a terminal operating as a communication-parameter receiving terminal (terminal C in this embodiment). When the setting button **106** is operated in the receiving terminal, the process shown in FIG. **4** is started.

When the terminal C determines to operate as a communication-parameter receiving terminal in accordance with a predetermined method, the terminal C starts a process as a receiving terminal (S**401**). At first, the terminal C searches for a communication-parameter providing terminal (S**402**). Specifically, the terminal C sends a probe request including information for giving a request for a communication-parameter automatic setting process and enters standby for receiving a probe response including information indicating that the sender of the probe response is a providing terminal for a predetermined time. Alternatively, the terminal C enters standby for receiving a beacon including information indicating that the sender of the beacon is a providing terminal for a predetermined time. When no providing terminal has been detected within the predetermined time, the terminal C ends the communication-parameter automatic setting process.

Next, the terminal C determines whether a plurality of providing terminals have been detected as a result of performing the providing-terminal searching process in step S**402** (S**403**).

When a plurality of providing terminals have been detected in step S**403**, the terminal C broadcasts a notification indicating that the plurality of providing terminals exist on a network (hereinafter called an overlap notification) (S**408**). When the overlap notification is broadcast, surrounding terminals can be notified of the fact that the plurality of providing terminals exist.

After broadcasting of the overlap notification ends, the terminal C ends the process as a receiving terminal (S**407**).

Alternatively, when not a plurality of providing terminals is detected, that is, when only one providing terminal is detected, the terminal C starts a process of receiving communication parameters from the detected providing terminal (S**404**). Specifically, the terminal C requests the detected providing terminal to start providing communication parameters, and receives communication parameters provided from the providing terminal.

Since the terminal C may receive an overlap notification from another terminal even after having started the communication-parameter receiving process, the terminal C periodically checks whether an overlap notification is received until the communication-parameter receiving process is completed (S**405**).

When the communication-parameter receiving process is completed before which no overlap notification is received (S**406**), the terminal C ends the process as a receiving terminal (S**407**).

In contrast, when an overlap notification is received in step S**405**, the terminal C cancels the communication-parameter receiving process being performed, and ends the process as a receiving terminal (S**407**).

FIGS. **5**A and **5**B are flowcharts of the operation of a terminal operating as a communication-parameter providing terminal (terminals A and B in this embodiment). When the setting button **106** is operated in the providing terminal, the process shown in FIG. **5**A is started. In the following description, the providing terminal is the terminal A by way of example.

When the terminal A determines to operate as a communication-parameter providing terminal in accordance with a predetermined method, the terminal A starts a process as a providing terminal (S**501**). The terminal A performs the processing in steps S**502** to S**506** and a process A (S**511** to S**518** shown in FIG. **5**B) in parallel to each other. First, the process A will be described using FIG. **5**B.

The terminal A is on standby for receiving a signal from another terminal (S**511**) until a timer in a communication-parameter automatic setting process runs out (S**518**). When the timer in the communication-parameter automatic setting process runs out before which no signal is received, the terminal A ends the process A and progresses to step S**507**.

When a signal received in step S**511** is a probe request including information for giving a request for a communication-parameter automatic setting process (S**512**), the terminal A sends a probe response including information indicating that the sender of the probe response is a providing terminal (S**513**). Then, the process returns to step S**511**.

When a signal received in step S**511** is a request from a receiving terminal to start providing communication parameters (S**514**), the terminal A starts a process of providing communication parameters to the receiving terminal (S**515**).

Since the terminal A may receive an overlap notification from another terminal even after having started the communication-parameter providing process, the terminal A periodically checks whether an overlap notification is received until the communication-parameter providing process is completed (S**516**).

When the communication-parameter providing process is completed before which no overlap notification is received (S**517**), the terminal A ends the process A and progresses to step S**507**.

In contrast, when an overlap notification is received in step S**516**, the terminal A cancels the communication-parameter providing process being performed, ends the process A, and progresses to step S**507**.

When the providing terminal A receives an overlap notification from another terminal, the terminal A may further forward the overlap notification to another terminal by broadcasting the overlap notification. Accordingly, all terminals located within the communication area of the providing terminal A can be notified of the fact that a plurality of providing terminals exist.

Then, the process from step S**502** onward will be described.

In order to check whether a providing terminal other than the terminal A exists, the terminal A searches for a providing terminal (S**502**). Specifically, the terminal A sends a probe request including information for giving a request for a communication-parameter automatic setting process and enters standby for receiving a probe response including information indicating that the sender of the probe response is a providing terminal for a predetermined time. Alternatively, the terminal A enters standby for receiving a beacon including information indicating that the sender of the beacon is a providing terminal for a predetermined time.

Next, the terminal A determines whether a providing terminal other than the terminal A has been detected as a result of performing the providing-terminal searching process in step S**502** (S**503**).

When a providing terminal other than the terminal A has been detected in step S**503**, the terminal A broadcasts an overlap notification (S**505**). The overlap notification is broadcast here because, when the communication-parameter automatic setting process is further performed, unnecessary (unintended) communication parameters may be provided. After sending the overlap notification, when the terminal A is performing the communication-parameter providing process, the terminal A ends that process (S**506**). Then, the terminal A ends the process as a communication-parameter providing terminal (S**507**).

Alternatively, instead of immediately ending the process as a providing terminal, the terminal A may periodically repeat a providing-terminal searching process. When no providing terminal other than the terminal A is detected anymore, the terminal A may resume the process as a providing terminal.

In contrast, when no providing terminal other than the terminal A has been detected in step S**503**, the terminal A periodically searches for a providing terminal in step S**502** until a timer in a communication-parameter automatic setting process runs out (S**504**). When the timer in the communication-parameter automatic setting process runs out, the terminal A ends the process as a providing terminal (S**507**).

As described above, when a plurality of providing terminals exist in a communication-parameter automatic setting process, an unintended setting process can be avoided in advance by sending overlap notifications to one another.

In this embodiment, the above description concerns the case where both the terminals A and B are communication terminals in the ad-hoc network. However, similar processing can be performed when both or one of the terminals A and B is a wireless LAN access point with a communication-parameter providing function.

The above description concerns the case where one communication-parameter providing terminal can provide communication parameters to one terminal in one communication-parameter automatic setting process.

The case where one communication-parameter providing terminal can provide communication parameters to two or more terminals in one communication-parameter automatic setting process can be similarly described.

FIG. **6** is a diagram showing a terminal A**603** (hereinafter called a terminal A), a terminal B**604** (hereinafter called a terminal B), a terminal C**605** (hereinafter called a terminal C), a terminal D**606** (hereinafter called a terminal D), and a terminal E**607** (hereinafter called a terminal E). All these terminals have the configurations described above with reference to FIGS. **1** and **2**.

The terminals A and D are terminals operating as communication-parameter providing terminals. An ad-hoc network **601** is configured by communication parameters managed by the terminal A. An ad-hoc network **602** is configured by communication parameters managed by the terminal D.

The terminals B, C, and E are terminals operating as communication-parameter receiving terminals. It is assumed that the terminals B and C are performing a communication-parameter automatic setting process with the terminal A using the button pressing method. It is also assumed that the providing terminal A is providing communication parameters to the receiving terminals B and C. The following example concerns the case in which the terminals D and E start a new communication parameter automatic setting process in which the providing terminal D provides communication parameters to the receiving terminal E.

The terminal E is located at a place where a communication area of the network **601** overlaps a communication area of the network **602**. The terminal E can receive wireless signals both from the terminals A and D. Therefore, when a setting process is started using the pressing button method in this positional relationship, the terminal E may receive communication parameters not from the terminal D, but from the terminal A. Also, when the terminal E receives communication parameters from the terminal A, the terminal E can communicate even with the terminals B and C.

In order to solve such a problem, the terminals B, C, and E which are communication-parameter receiving terminals perform the foregoing operation shown in FIG. **4**, and the terminals A and D which are providing terminals perform the foregoing operation shown in FIGS. **5**A and **5**B.

In the example shown in FIG. **6**, the receiving terminal E detects that a plurality of providing terminals exist and broadcasts an overlap notification. When the overlap notification from the terminal E reaches all the terminals A to D, the terminals A to D can individually cancel the communication-parameter automatic setting process. In contrast, when the overlap notification from the terminal E does not reach the receiving terminals B and C and only the providing terminals A and D receive the overlap notification from the terminal E, the overlap notification is transferred to the receiving terminals B and C by broadcasting the overlap notification from the providing terminal A. Accordingly, a connection error caused by performing a communication-parameter automatic setting process in unintended terminals can be avoided in advance.

The exemplary embodiment disclosed herein is for illustrative purposes only, and the scope of the present invention is not limited to this embodiment. Various modifications can be made to the embodiment without departing from the gist of the present invention.

For example, the signal type of an overlap notification in the description of the foregoing embodiment is not specified. The signal type of a signal to be sent is not limited, and any signal can be used as long as it serves as an overlap notification.

Although an overlap notification is broadcast in the description of the foregoing embodiment, an overlap notification can be sent to a providing terminal. In this case, the providing terminal transfers the overlap notification to a partner receiving terminal. Accordingly, all terminals having started a communication-parameter automatic setting pro-

cess can recognize that a plurality of providing terminals exist and can cancel the communication-parameter automatic setting process.

Although the description of the foregoing embodiment concerns the case where the button pressing method is used, the present invention is applicable to the case where other methods are used. For example, the present invention is applicable to the case where a communication-parameter automatic setting process is started when a contactless integrated circuit (IC) card is placed above a terminal. Furthermore, the present invention is applicable to the case where a communication-parameter automatic setting process is started when a setting start signal is received by performing short-distance wireless communication.

The description of the foregoing embodiment concerns the case where the wireless LAN conforming to IEEE 802.11 is used by way of example. However, the present invention is applicable to other wireless media such as a wireless universal serial bus (USB), MultiBand Orthogonal frequency-division multiplexing (OFDM) Alliance (MBOA), Bluetooth (registered trademark), ultra-wideband (UWB), and Zigbee. Alternatively, the present invention is applicable to a wired communication medium such as a wired LAN.

UWB includes a wireless USB, wireless 1394, WiNET, and the like.

Although the network identifier, the encryption method, the encryption key, the authentication method, and the authentication key serve as communication parameters in the description of the foregoing embodiment, other information may serve as communication parameters. That is, communication parameters include other information.

According to the present invention, a storage medium having recorded thereon a program code of software that realizes the foregoing functions is supplied to a system or apparatus, and a computer (central processing unit (CPU) or microprocessing unit (MPU)) of the system or apparatus reads and executes the program code stored on the storage medium. In this case, the program code itself read from the storage medium realizes the foregoing functions of the embodiment, and the storage medium having the program code recorded thereon constitutes the present invention.

As the storage medium for providing the program code, for example, a flexible disk, a hard disk, an optical disc, a magneto-optical disc, a compact disc read-only memory (CD-ROM), a compact disc-recordable (CD-R), a magnetic tape, a non-volatile memory card, a ROM, a digital versatile disc (DVD), or the like can be used.

As well as realizing the foregoing functions by executing the program code read by the computer, an operating system (OS) running on the computer may execute part of or the entirety of actual processing on the basis of instructions of the program code to realize the foregoing functions.

Furthermore, the program code read from the storage medium may be written into a memory included in a function expansion board placed in the computer or a function expansion unit connected to the computer. On the basis of the instructions of the program code, a CPU included in the function expansion board or the function expansion unit may execute part of or the entirety of actual processing to realize the foregoing functions.

What is claimed is:

1. A communication apparatus comprising:

a central processing unit;

a processing unit configured to execute communication-parameter sharing processing for transmission of a communication parameter directly to a receiving apparatus from a providing apparatus, wherein the communication-parameter sharing processing is started in response to a user instruction;

a determining unit configured to determine, in a case where the communication apparatus is executing the communication-parameter sharing processing as the providing apparatus, whether there exists another apparatus that has executed the communication-parameter sharing processing; and

a cancel unit configured to cancel, in a case where there are plural apparatuses that are executing the communication-parameter sharing processing and the communication apparatus is operating as the providing apparatus, the execution of the communication-parameter sharing processing by the processing unit as an error,

wherein at least one of the processing unit, the determining unit, and the cancel unit is implemented by the central processing unit.

2. The communication apparatus according to claim **1**, further comprising a sending unit configured to send, in a case where the communication apparatus is executing the communication-parameter sharing processing as the providing apparatus and there are plural apparatuses that are executing the communication-parameter sharing processing, a notification indicating that plural apparatuses are executing the communication-parameter sharing processing directly to a first apparatus that is executing the communication-parameter sharing processing as a receiving apparatus.

3. The communication apparatus according to claim **2**, wherein the sending unit sends the notification by wireless communication conforming to IEEE 802.11 series.

4. The communication apparatus according to claim **2**, wherein the communication-parameter sharing processing is performed based on wireless communication conforming to IEEE 802.11.

5. The communication apparatus according to claim **2**, wherein the notification sent by the sending unit causes the first apparatus to cancel executing the communication-parameter sharing processing.

6. The communication apparatus according to claim **1**, wherein the communication parameter includes at least one of a SSID (Service Set Identifier), an encryption method, an authentication method, and an authentication key.

7. The communication apparatus according to claim **1**, wherein the determining unit executes the determination based on communication of a search signal.

8. The communication apparatus according to claim **1**, wherein the processing unit is a transmitter of a request for start to provide the communication parameter received by the communication apparatus, and executes the communication-parameter sharing processing with another apparatus operating as a receiving apparatus.

9. The communication apparatus according to claim **1**, wherein the communication apparatus transmits a probe response to which information on the communication-parameter sharing processing is added in a case where the communication apparatus receives a probe request to which the information on the communication-parameter sharing processing is added.

10. The communication apparatus according to claim **1**, wherein the communication apparatus is an access point of wireless LAN.

11. A method of controlling a communication apparatus having a processing unit configured to execute communication-parameter sharing processing for transmission of a communication parameter directly to a receiving apparatus from a

providing apparatus, wherein the communication-parameter sharing processing is started in response to a user instruction, the method comprising:

determining, in a case where the communication apparatus is executing the communication-parameter sharing processing as the providing apparatus, whether there exists another apparatus that has executed the communication-parameter sharing processing; and

canceling, in a case where there are plural apparatuses that are executing the communication-parameter sharing processing and the communication apparatus is operating as the providing apparatus, the execution of the communication-parameter sharing processing by the processing unit as an error.

12. A non-transitory computer-readable storage medium storing a program to cause controlling of a communication apparatus having a processing unit configured to execute communication-parameter sharing processing for transmission of a communication parameter directly to a receiving apparatus from a providing apparatus, wherein the communication-parameter sharing processing is started in response to a user instruction, the method comprising:

determining, in a case where the communication apparatus is executing the communication-parameter sharing processing as the providing apparatus, whether there exists another apparatus that has executed the communication-parameter sharing processing; and

canceling, in a case where there are plural apparatuses that are executing the communication-parameter sharing processing and the communication apparatus is operating as the providing apparatus, the execution of the communication-parameter sharing processing by the processing unit as an error.

* * * * *