US00D728624S

(12) United States Design Patent

Akana et al.

(10) Patent No.: US D728,624 S

(45) Date of Patent: ** May 5, 2015

(54) **ELECTRONIC DEVICE**

(71) Applicant: **Apple Inc.**, Cupertino, CA (US)

(72) Inventors: **Jody Akana**, San Francisco, CA (US); **Bartley K. Andre**, Palo Alto, CA (US); **Shota Aoyagi**, San Francisco, CA (US); **Anthony Michael Ashcroft**, San Francisco, CA (US); **Jeremy Bataillou**, San Francisco, CA (US); **Daniel J. Coster**, San Francisco, CA (US); **Daniele De Iuliis**, San Francisco, CA (US); **M. Evans Hankey**, San Francisco, CA (US); **Julian Hoenig**, San Francisco, CA (US); **Richard P. Howarth**, San Francisco, CA (US); **Jonathan P. Ive**, San Francisco, CA (US); **Duncan Robert Kerr**, San Francisco, CA (US); **Marc A. Newson**, London (GB); **Matthew Dean Rohrbach**, San Francisco, CA (US); **Peter Russell-Clarke**, San Francisco, CA (US); **Benjamin Andrew Shaffer**, San Jose, CA (US); **Mikael Silvanto**, San Francisco, CA (US); **Christopher J. Stringer**, Woodside, CA (US); **Eugene Antony Whang**, San Francisco, CA (US); **Rico Zörkendörfer**, San Francisco, CA (US)

(73) Assignee: **Apple Inc.**, Cupertino, CA (US)

(**) Term: **14 Years**

(21) Appl. No.: **29/499,042**

(22) Filed: **Aug. 11, 2014**

(51) **LOC (10) Cl.** **14-03**

(52) **U.S. Cl.**
USPC **D14/496**

(58) **Field of Classification Search**
CPC H04J 11/00; H04J 13/00; H04J 14/00
USPC ..... D14/496, 401, 435, 474, 483, 217, 137, D14/138, 160, 168, 356, 203.1–203.8, 507; 345/156, 169, 173–179, 905; 715/727–729, 864; 710/1, 5, 8; 713/1, 713/600; 455/1.1, 1.7, 73, 344–347, 93, 95, 455/3.01–3.06, 550.1, 573.1; 370/342–344; 369/1, 2, 6–12; 463/43–47; 273/148 B; D10/30, 31, 38, 128
See application file for complete search history.

(56) **References Cited**

U.S. PATENT DOCUMENTS

3,640,065 A 2/1972 Lederrey et al.

(Continued)

FOREIGN PATENT DOCUMENTS

DE 10229050 C1 6/2003

(Continued)

OTHER PUBLICATIONS

Alvarez, Edgar, "Basis Peak to get its smartwatch-like features in December," engadget.com, <http://www.engadget.com/2014/11/20/basis-peak-new-features/>, dated Nov. 20, 2014, accessed Dec. 15, 2014.

(Continued)

Primary Examiner — Prabhakar Deshmukh

(74) *Attorney, Agent, or Firm* — Sterne, Kessler, Goldstein & Fox P.L.L.C.

(57) **CLAIM**

The ornamental design for an electronic device, as shown and described.

DESCRIPTION

FIG. **1** is a bottom front perspective view of an electronic device showing our new design;
FIG. **2** is a bottom rear perspective view thereof;
FIG. **3** is a front view thereof;
FIG. **4** is a rear view thereof;
FIG. **5** is a left side view thereof;
FIG. **6** is a right side view thereof;
FIG. **7** is a top view thereof;
FIG. **8** is a bottom view thereof; and,
FIG. **9** is a top front perspective reference view of the electronic device of the present invention showing our new design in an environment in which it may be used.
The oblique shade lines in the Figures show a transparent, reflective, or shiny surface, and not surface ornamentation.

1 Claim, 7 Drawing Sheets

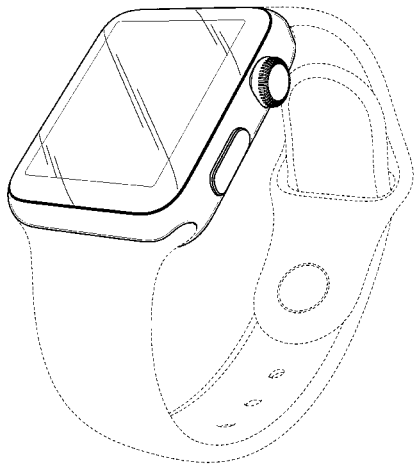

(56) **References Cited**

U.S. PATENT DOCUMENTS

D287,471	S		12/1986	Sato et al.	
5,386,933	A	*	2/1995	Greene et al.	224/219
D439,172	S		3/2001	Brzezinski	
6,655,831	B1		12/2003	Ruffieux	
D496,589	S		9/2004	Perrenoud	
6,970,157	B2	*	11/2005	Siddeeq	345/168
D513,195	S		12/2005	Gruosi	
7,004,469	B2	*	2/2006	von Goeben	273/348
D528,439	S		9/2006	Burton	
D528,928	S		9/2006	Burton	
7,106,197	B2	*	9/2006	Gaiotto et al.	340/572.1
D558,227	S	*	12/2007	Cho et al.	D14/496
D572,266	S	*	7/2008	Anderson et al.	D14/496
D574,735	S		8/2008	Landman et al.	
D578,922	S	*	10/2008	Hoshino	D10/128
D584,170	S		1/2009	Morrison	
D586,823	S	*	2/2009	Anderson et al.	D14/496
D589,375	S		3/2009	Tang	
D596,610	S		7/2009	Hou	
D616,417	S	*	5/2010	Liao	D14/203.5
7,708,457	B2		5/2010	Girardin et al.	
D637,094	S		5/2011	Cobbett et al.	
D637,918	S		5/2011	Cobbett et al.	
D650,706	S		12/2011	Zanella et al.	
D666,503	S	*	9/2012	Bulgari	D10/31
D681,483	S		5/2013	Biegert et al.	
D699,701	S	*	2/2014	Kim	D14/203.7
2010/0061191	A1		3/2010	Chen	

FOREIGN PATENT DOCUMENTS

EP	1098231	A1	5/2001
WO	D066491-004		3/2005
WO	DM / 072215		9/2009
WO	D077452-004		6/2011
WO	2014135709	A2	9/2014

OTHER PUBLICATIONS

Cool Material, "Braun Square Digital Watch," <http://web.archive.org/web/20111125033014/http://coolmaterial.com/style/braun-square-digital-watch/>, dated Nov. 25, 2011, accessed Dec. 18, 2014.

Fitbit, "Fitbit Surge™ Fitness Super Watch" <https://www.fitbit.com/surge>, accessed Dec. 15, 2014.

Hodinkee.com, "Apple iPod Nano Now Available With Mickey Mouse Dial, Also Cheesy, Mechanically Inaccurate Open-Worked Dial," <http://web.archive.org/web/20111006043916/http://www.hodinkee.com/blog/2011/10/5/apple-ipod-nano-now-available-with-mickey-mouse-dial-also-ch.html>, dated Oct. 6, 2011, accessed Dec. 18, 2014.

HOMEGO, "M6 Silver Smart Watch Cell Phone 1.54 inch Bluetooth 3.0 Dialer Outdoor Sports Pedometer," amazon.com, <http://www.amazon.com/Silver-Bluetooth-Dialer-Outdoor-Pedometer/dp/B00MQTBGK6>, accessed Dec. 15, 2014.

Ikepod, "Original Ikepod Watch With GMT—Marc Newson Design," Watchbox.be, <http://www.watchbox.be/prod/Others-Watches/Marc%20Newson%20Design/item7165.htm#.VJLm2fAo5D8>, accessed Dec. 17, 2014.

LG Life's Good, "LG G Watch (W100)," <http://www.lg.com/us/smart-watches/lg-W100-g-watch>, accessed Dec. 18, 2014.

Metawatch, "FRAME—Black (MW3005)," <http://meta.watch/collections/smartwatch-all/products/frame-ss-black-leather>, accessed Dec. 15, 2014.

Omate, "The TrueSmart™ is the world's first standalone smartwatch 2.0 running on top of Android and OUI 2.0," <http://www.omate.com/product.html>, accessed Dec. 15, 2014.

Pebble, "Pebble Smartwatch," getpebble.com, <https://getpebble.com/checkout>, accessed Dec. 15, 2014.

Samsung, "Galaxy Gear™ Live, Black SM-R3820ZKAXAR," <http://www.samsung.com/us/mobile/wearable-tech/SM-R3820ZKAXAR>, accessed Dec. 15, 2014.

Samsung, "Samsung Gear S™, (Sprint), Black SM-R750PZKASPR," <http://www.samsung.com/us/mobile/wearable-tech/SM-R750PZKASPR>, accessed Dec. 15, 2014.

Samsung, "Samsung Gear™ 2 Charcoal Black SM-R3800VSAXAR," <http://www.samsung.com/us/mobile/wearable-tech/SM-R3800VSAXAR>, accessed Dec. 15, 2014.

Sony, "SmartWatch 3 SWR50," <http://www.sonymobile.com/us/products/smartwear/smartwatch-3-swr50/>, accessed Dec. 15, 2014.

Sony, "SmartWatch," <http://www.sonymobile.com/us/products/accessories/smartwatch/>, accessed Dec. 15, 2014.

Stables, James, "Clevercare smartwatch aims to help Alzheimer's suffers and carers: Revamped Sony SmartWatch 2 designed for users that need care," WEARABLE NEWS, <http://www.wareable.com/wearable-tech/clevercare-smartwatch-aims-to-help-alzheimers-suffers-and-carers-585>, dated Dec. 15, 2014.

Team Luxe, "Collector's Edition: Hermes Carre H Watch," Luxpresso, <http://luxpresso.com/news-couture/collectors-edition-hermes-carre-h-watch/2814>, dated Jan., 10, 2011, accessed Dec. 18, 2014.

Velazco, Chris, "ASUS ZenWatch review: subtle and stylish, with a few shortcomings," Engadget.com, <http://www.engadget.com/2014/12/11/asus-zenwatch-review/>, dated Dec. 11, 2014, accessed Dec. 15, 2014.

Watches Infoniac.com, "Hermes Carre H Watch—Extremely Contemporary Design," <http://watches.infoniac.com/carre-h-watch-hermes.html>, dated Aug. 13, 2010, accessed Dec. 18, 2014.

Watchismo, "Braun BN0042 Black Date Leather," <http://web.archive.org/web/20130815073830/http://www.watchismo.com/braun-bn0042bkbk.aspx>, dated Aug. 15, 2013, accessed Dec. 18, 2014.

OMATE, "Omate TrueSmart: Water-resistant standalone Smartwatch 2.0," <http://www.kickstarter.com/projects/omate/omate-truesmart-water-resistant-standalone-smartwa>, dated Aug. 21, 2013, accessed Oct. 8, 2014.

geekbuying.com, "Makibes unisex red led digital wrist watch with square case silicone watchband—white," <http://www.geekbuying.com/item/Unisex-Red-LED-Digital-Wrist-Watch-with-Square-Case-Silicone-Watchband—White-326443.html>, accessed Oct. 9, 2014.

Emily, "Nixon—The Newton Digital," <http://www.freshnessmag.com/2009/09/08/nixon-the-newton-digital/>, freshnessmag.com, dated Sep. 8, 2009, accessed Oct. 9, 2014.

Ted Baker, "Ted Baker Men's TE1054 Time Flies Contemporary Square Digital Case Watch," <http://www.amazon.com/Ted-Baker-TE1054-Contemporary-Digital/dp/B0045CRTYO%3FSubscriptionID%3DAKIAJ3U4YRIBWCGGKZ2A%26tag%3Dfrases365-20%linkCode%3Dsp1%26camp%3D2025%26creativeASIN%3DB0045CRTYO>, accessed Oct. 9, 2014.

* cited by examiner

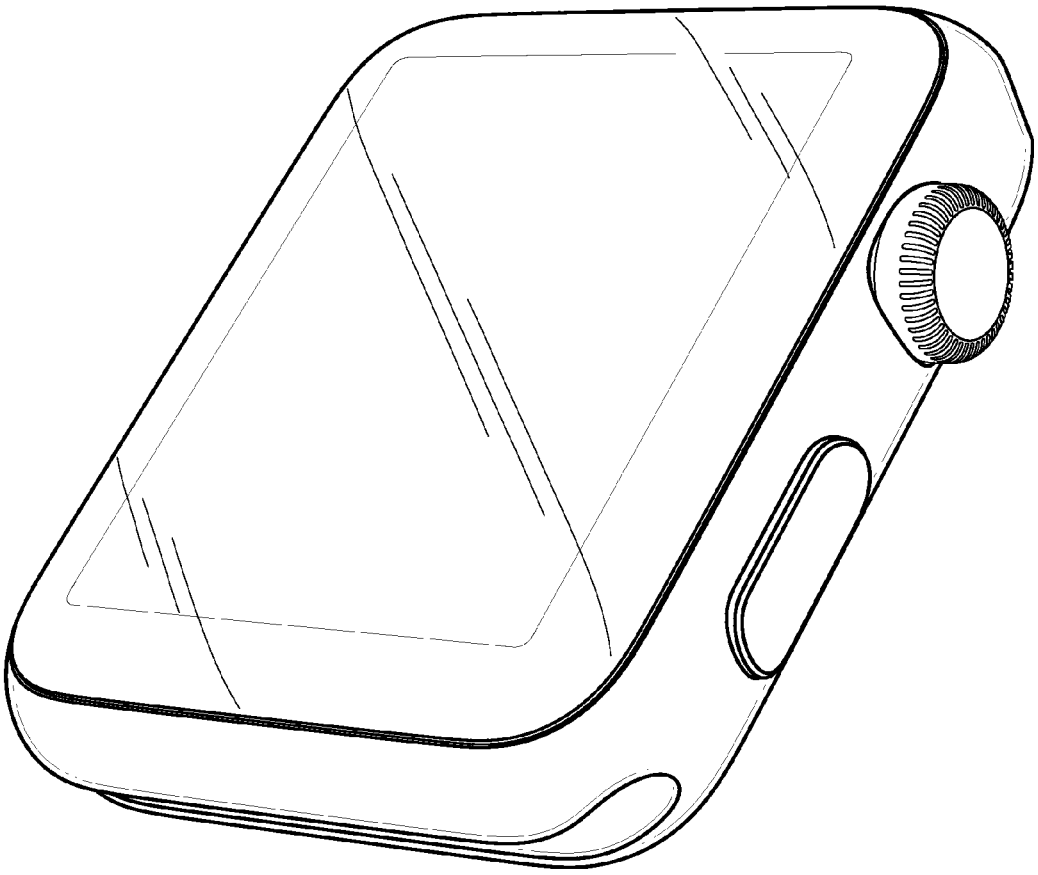

FIG. 1

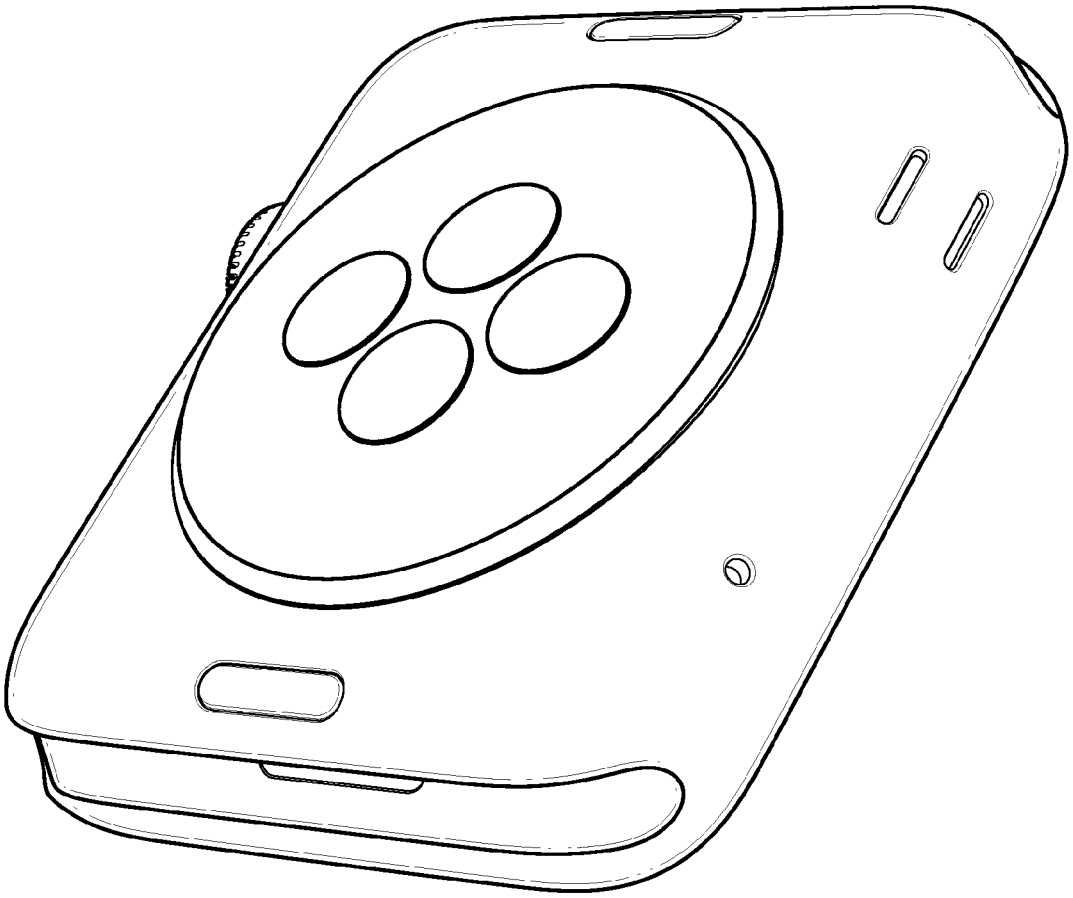

FIG. 2

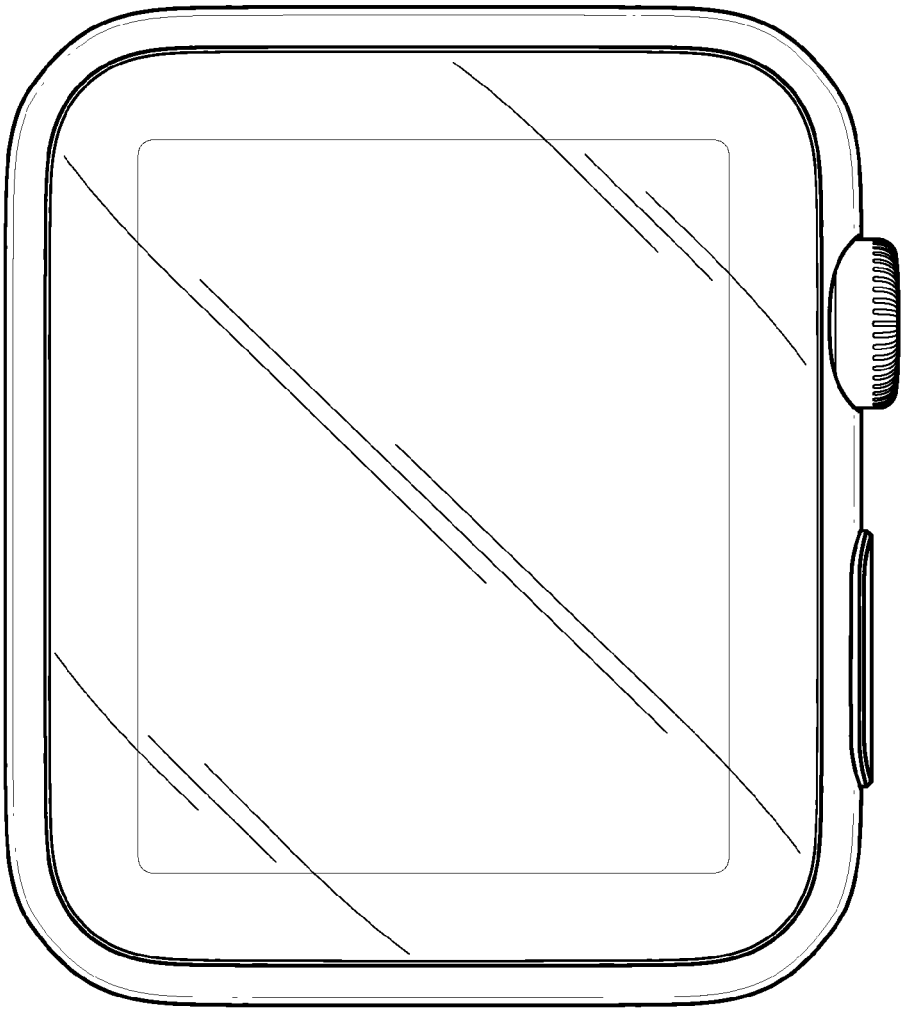

FIG. 3

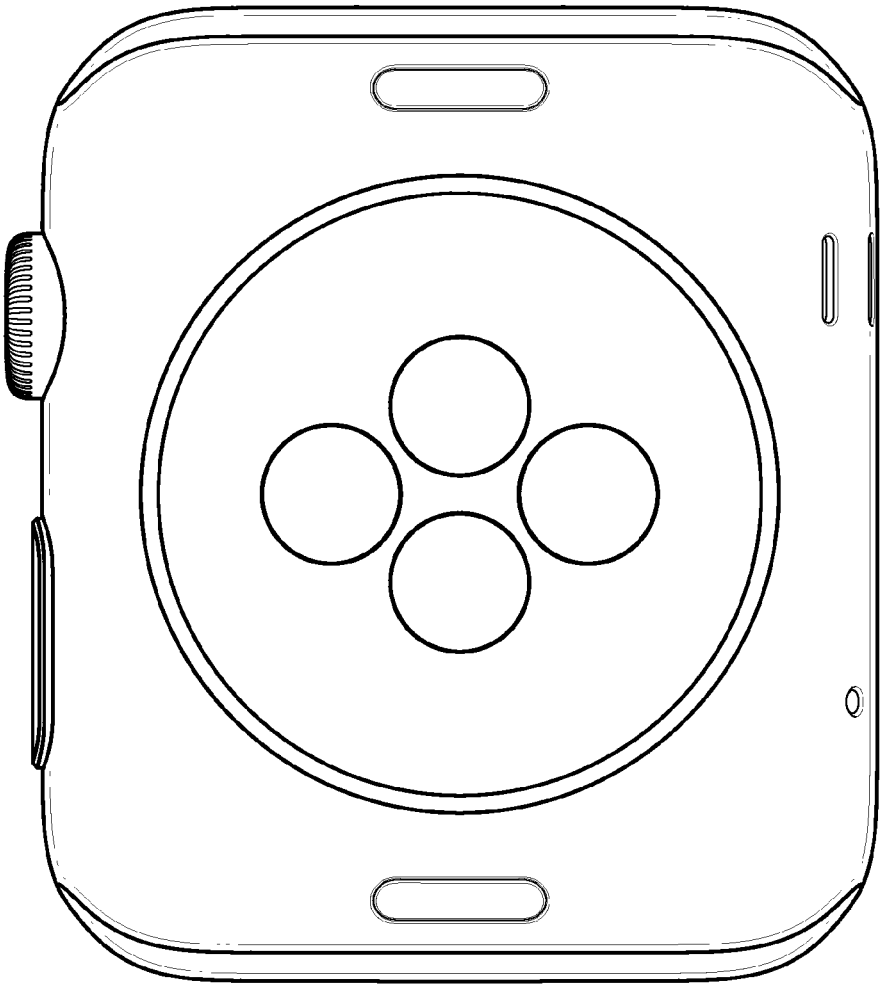

FIG. 4

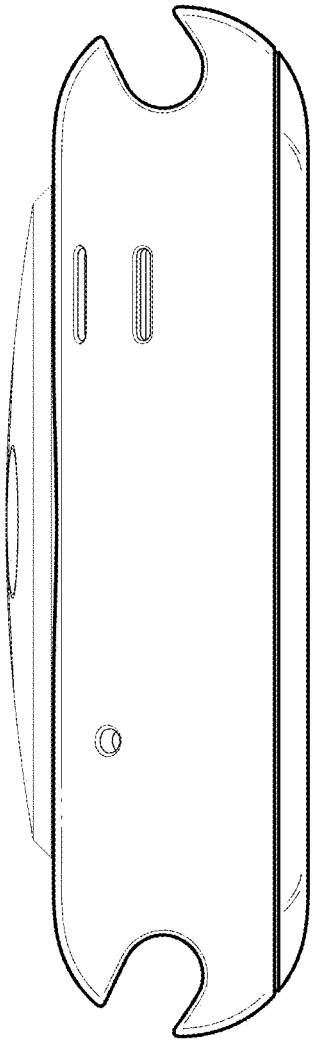

FIG. 5

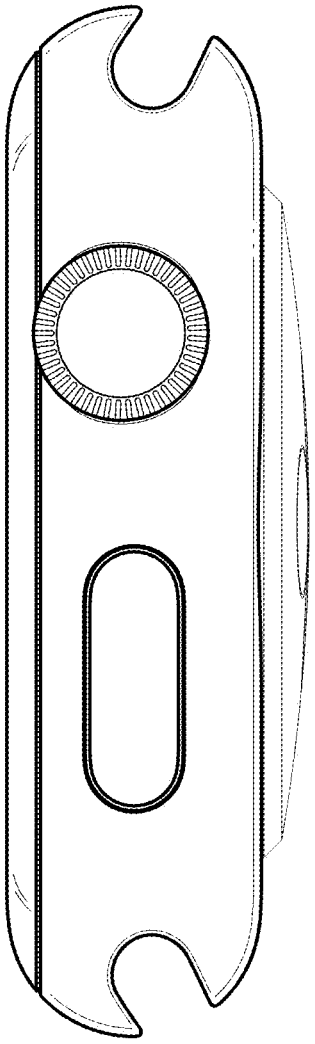

FIG. 6

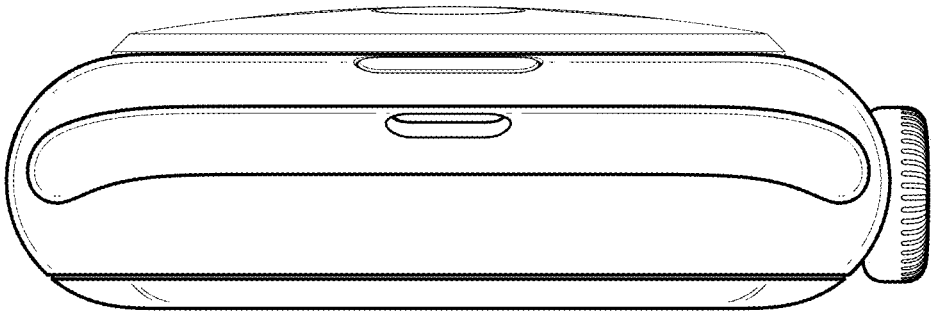

FIG. 7

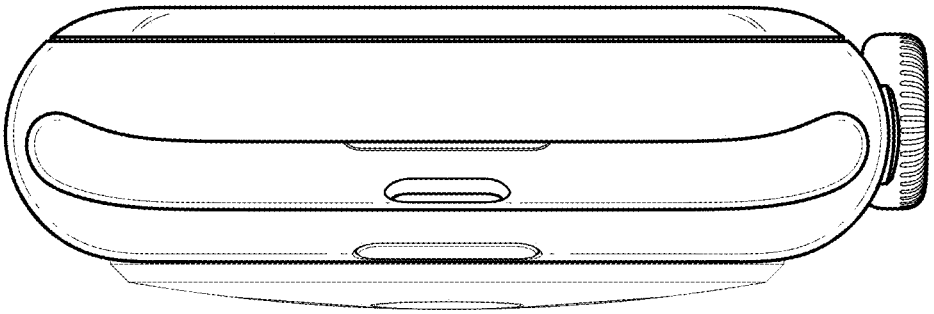

FIG. 8

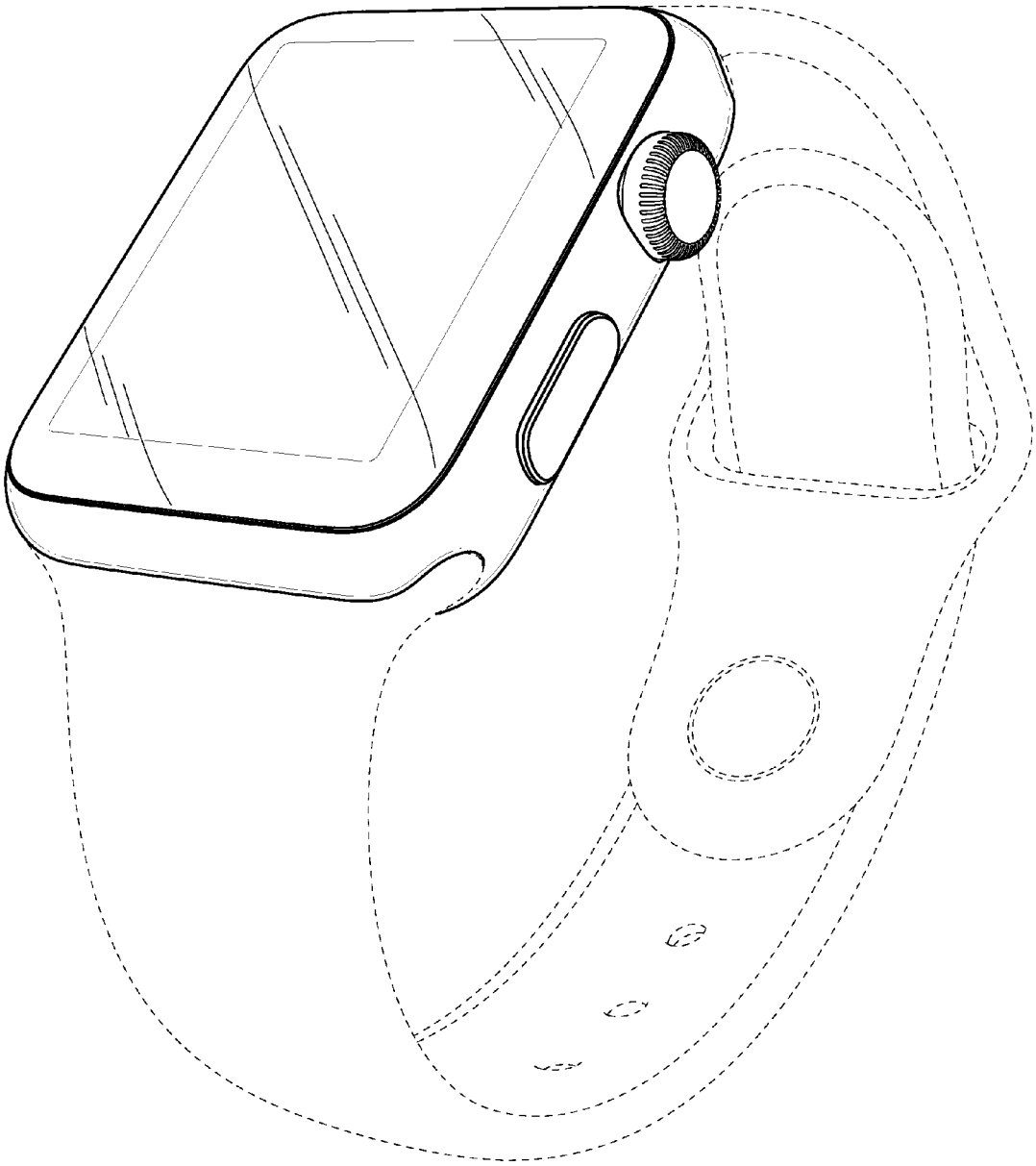

FIG. 9