US009404723B2

(12) **United States Patent**
Chapek et al.

(10) **Patent No.: US 9,404,723 B2**
(45) **Date of Patent: Aug. 2, 2016**

(54) **DRILL PIPE MEASURING SYSTEM**

(71) Applicant: **Strapstick LLC**, Cohasset, MN (US)

(72) Inventors: **Jonathan David Chapek**, Cohasset, MN (US); **Matthew D. Lepper**, Perham, MN (US)

(73) Assignee: **Strapstick LLC**, Cohasset, MN (US)

(*) Notice: Subject to any disclaimer, the term of this patent is extended or adjusted under 35 U.S.C. 154(b) by 85 days.

(21) Appl. No.: **14/485,034**

(22) Filed: **Sep. 12, 2014**

(65) **Prior Publication Data**

US 2015/0075021 A1 Mar. 19, 2015

Related U.S. Application Data

(60) Provisional application No. 61/877,450, filed on Sep. 13, 2013.

(51) **Int. Cl.**
G01B 3/10 (2006.01)

(52) **U.S. Cl.**
CPC ***G01B 3/1084*** (2013.01); ***G01B 3/1041*** (2013.01)

(58) **Field of Classification Search**
CPC G01B 3/1041; G01B 3/1084
USPC 33/759, 760, 761, 768
See application file for complete search history.

(56) **References Cited**

U.S. PATENT DOCUMENTS

1,199,471	A		9/1916	Lemassena	
2,544,908	A		3/1951	Winston	
2,549,503	A	*	4/1951	McCully	G01B 3/1071 33/760
2,571,569	A	*	10/1951	Greenwood	G01B 3/1084 33/484
2,629,934	A		2/1953	Scott	
2,654,155	A		10/1953	Barnhart	
2,785,477	A		3/1957	Gregory	
3,016,617	A		1/1962	Bricker	
3,145,477	A		8/1964	Morrison	
4,033,041	A		7/1977	Allums	
6,332,277	B1		12/2001	Owoc	
6,658,756	B1	*	12/2003	Sanchez, Jr.	G01B 3/1041 211/70.6
7,020,978	B1	*	4/2006	Nelson	B25H 7/00 33/427
8,763,262	B2		7/2014	Smith-Habelow	
2005/0144793	A1	*	7/2005	Nelson	B25H 7/00 33/42
2006/0196072	A1	*	9/2006	Lewis	G01B 3/1071 33/760
2009/0193675	A1	*	8/2009	Sieber	A41H 1/02 33/759
2009/0271999	A1	*	11/2009	Alker	G01B 3/1041 33/762
2011/0203127	A1	*	8/2011	Mayfield	G01B 3/1071 33/768
2015/0060213	A1	*	3/2015	De Coi	B66B 1/3492 187/394
2015/0268024	A1	*	9/2015	Brossard	G01B 3/1056 33/760

* cited by examiner

Primary Examiner — G. Bradley Bennett
(74) *Attorney, Agent, or Firm* — Neustel Law Offices; Michael S. Neustel

(57) **ABSTRACT**

A drill pipe measuring system for efficiently and safely measuring drill pipe on an oil derrick. The drill pipe measuring system generally includes a main member, a tongue member extending outwardly from the main member, a retaining member having a groove that slidably receives the tongue member to secure a measuring tape adjacent to the tongue member and a securing member that is movably attached to an upper end of the main member to selectively retain a hook piece of the measuring tape. The securing member includes a pivot pin that the securing member pivots about and a locking member. When the locking member is in a released state, the securing member is allowed to move with respect to the main member. When the locking member is in the locked state, the securing member is prevented from moving with respect to the main member.

22 Claims, 15 Drawing Sheets

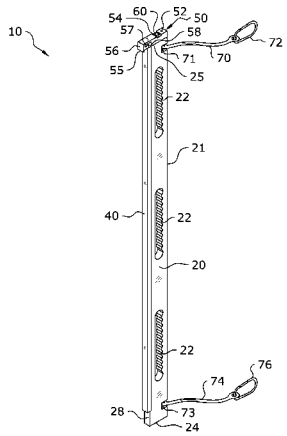

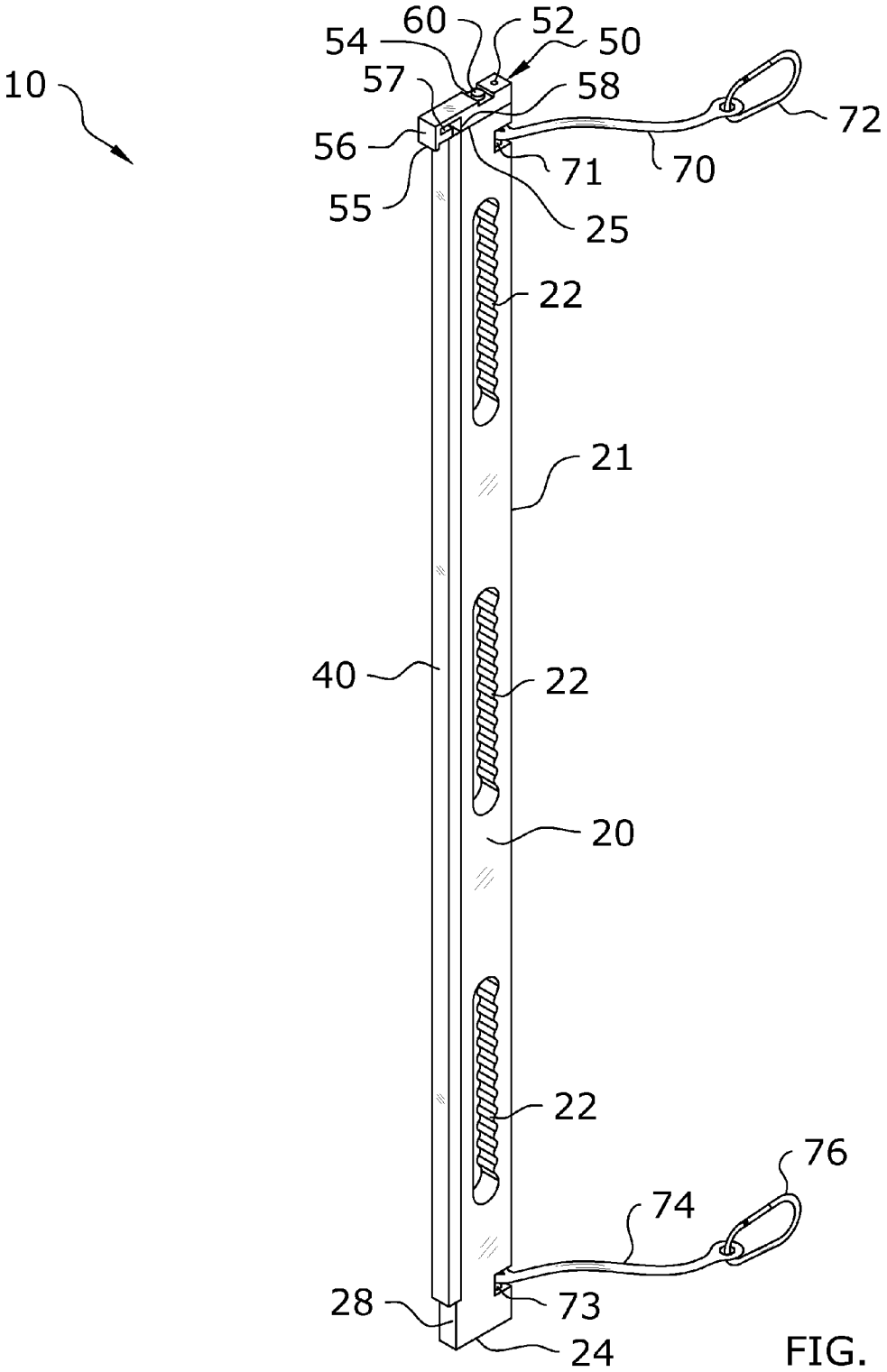

FIG. 1

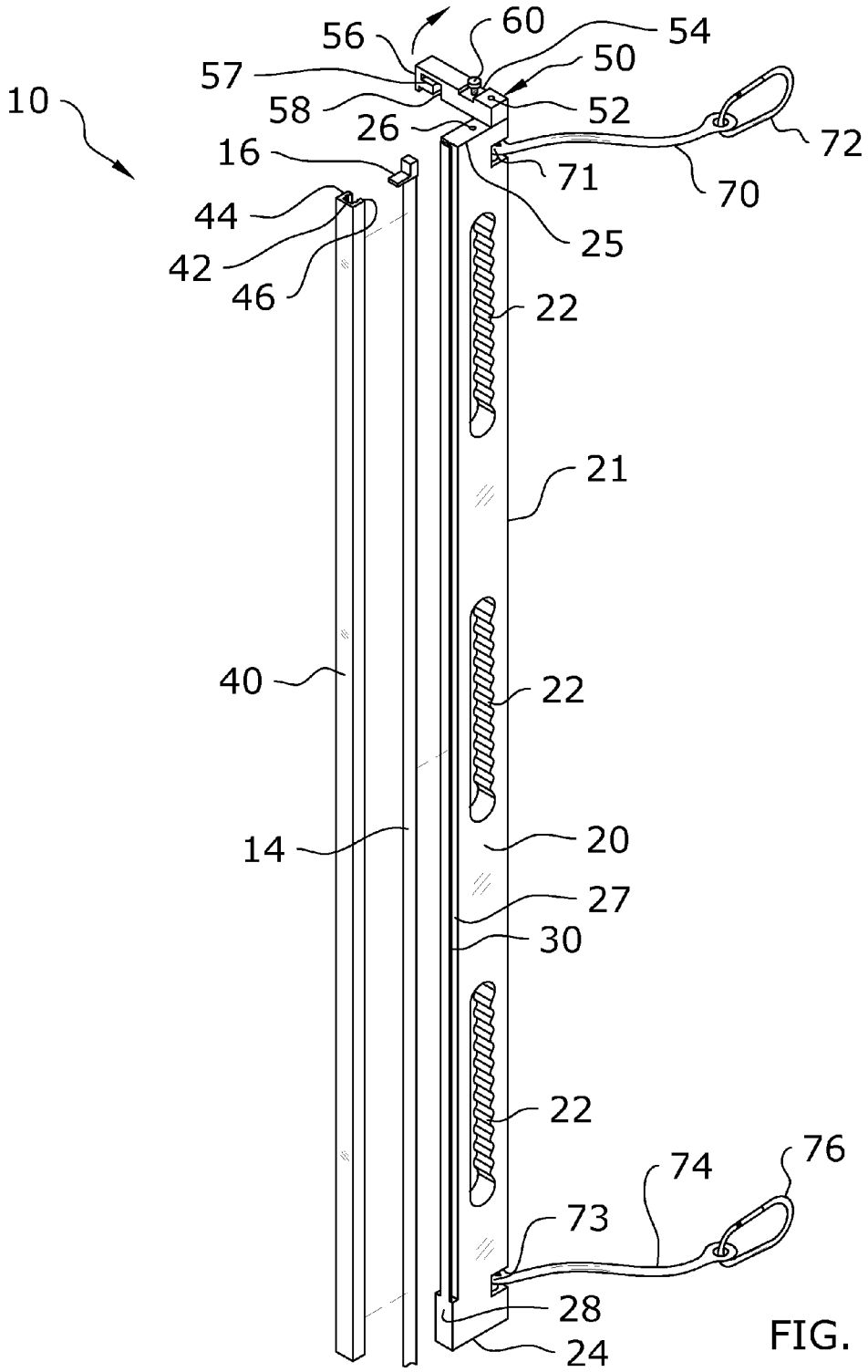
10
56
60
54
57
50
58
52
26
72
16
71
70
44
25
42
46
22
21
40
22
14
20
27
30
22
74
76
73
28
24

FIG. 2a

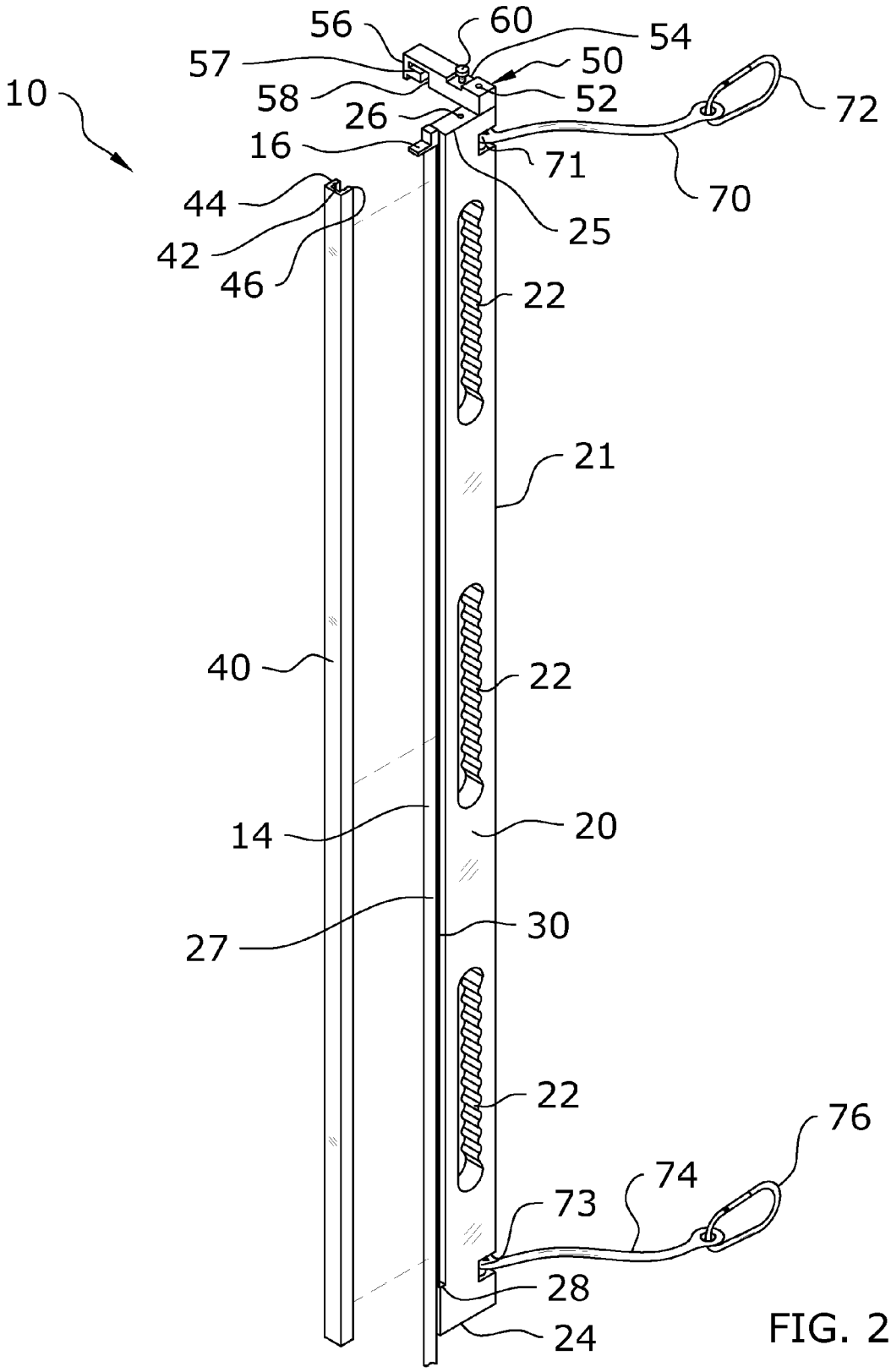
10
56
60
54
57
50
58
52
26
72
16
71
70
44
25
42
46
22
21
40
22
14
20
27
30
22
76
74
73
28
24

FIG. 2b

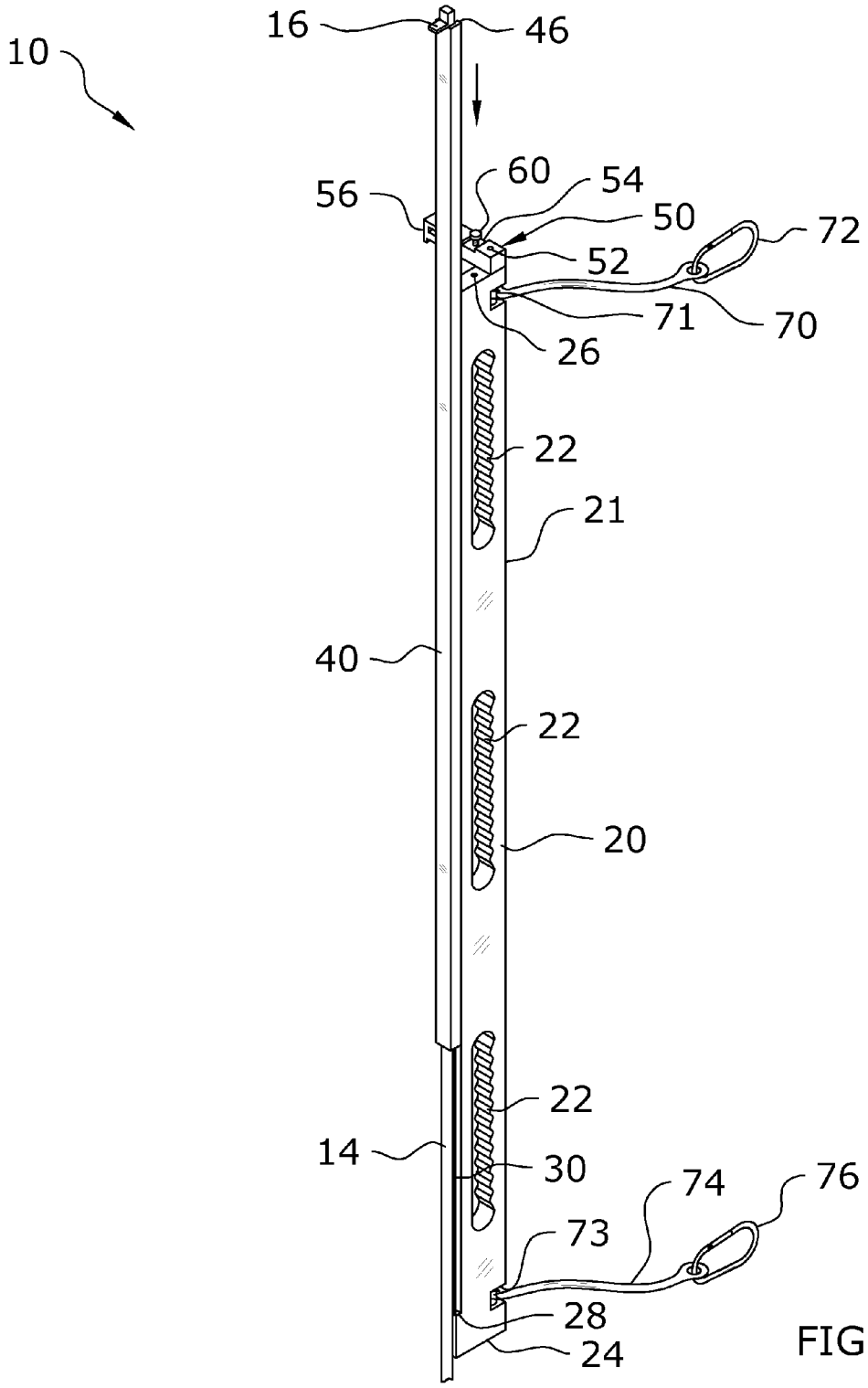
10
16
46
60
54
56
50
72
52
71
70
26
22
21
40
22
20
22
14
30
74
76
73
28
24

FIG. 2c

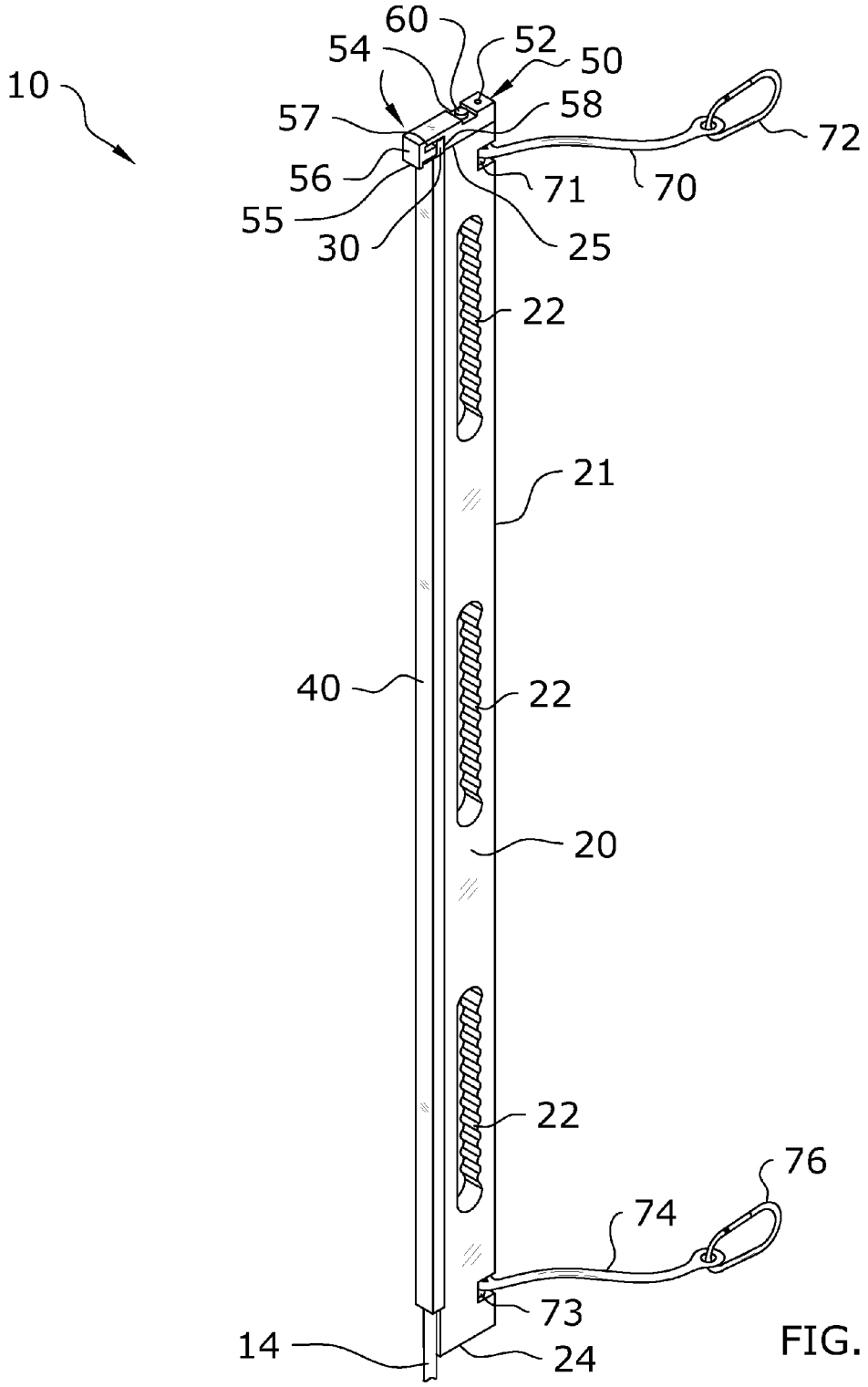
10
60
54
52
50
57
58
72
56
71
70
55
30
25
22
21
40
22
20
22
76
74
73
14
24

FIG. 2d

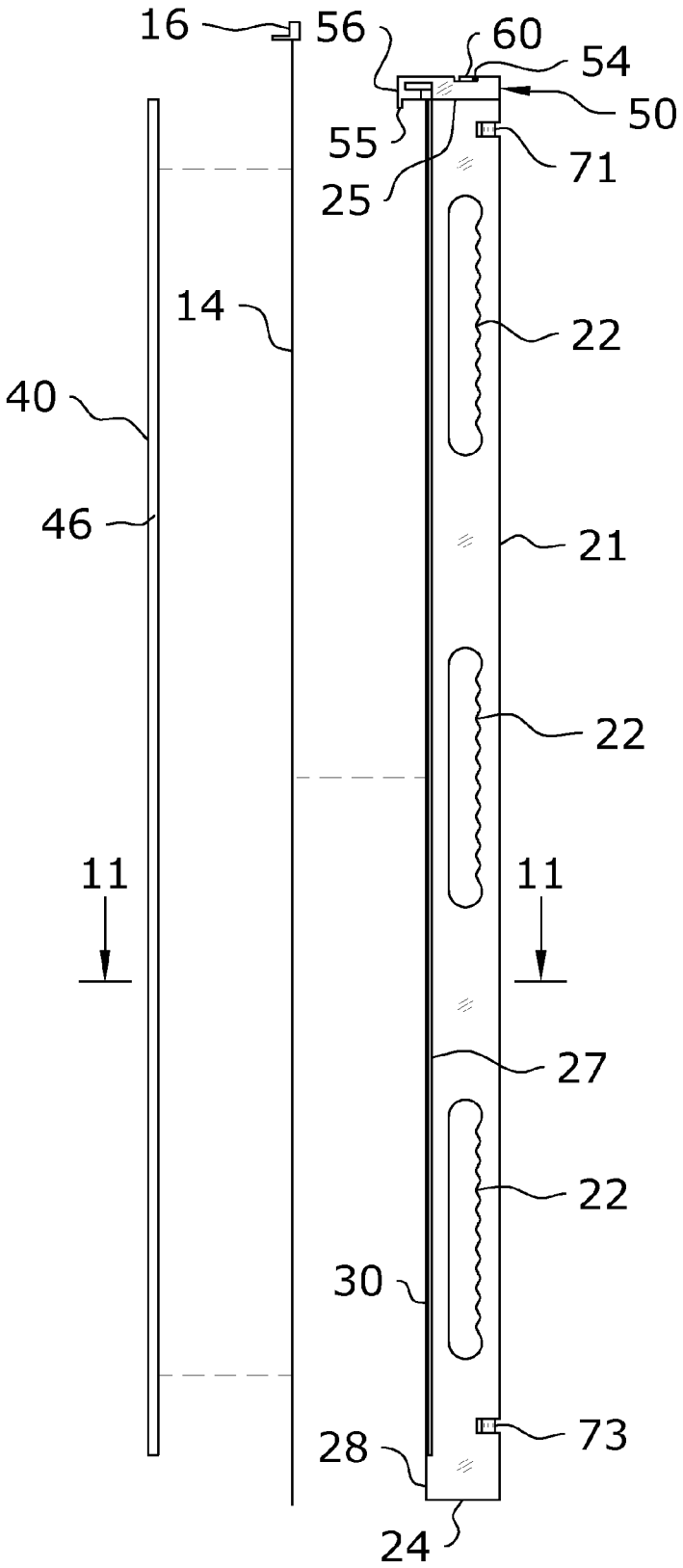

FIG. 3a

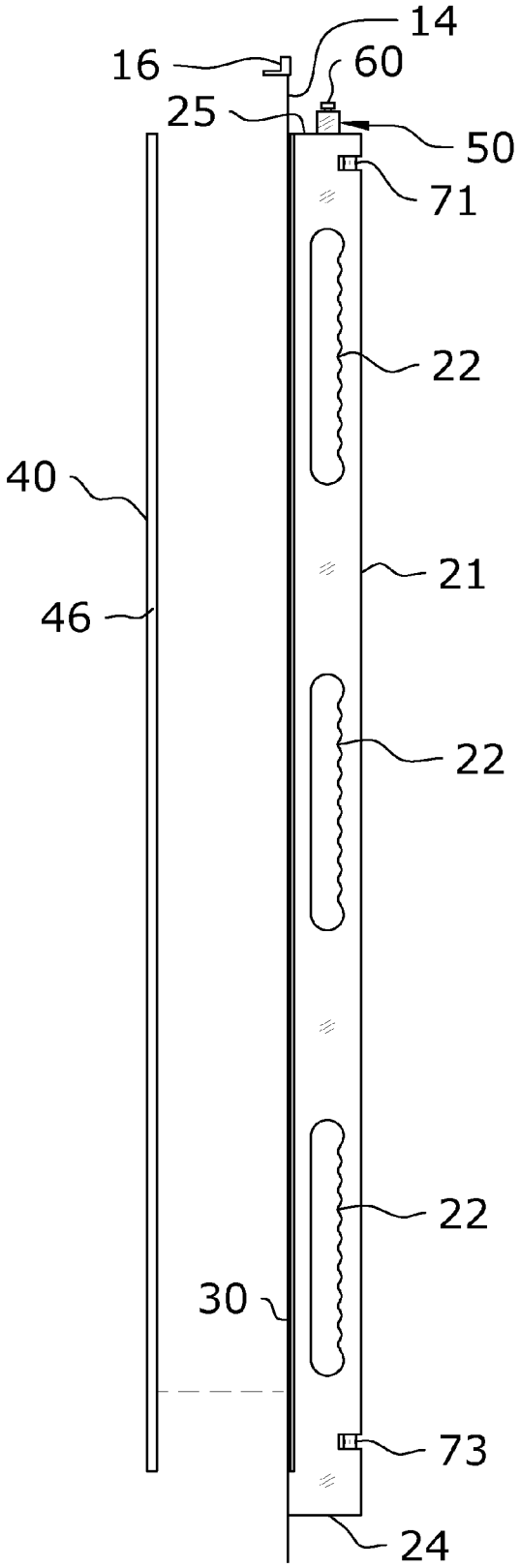

FIG. 3b

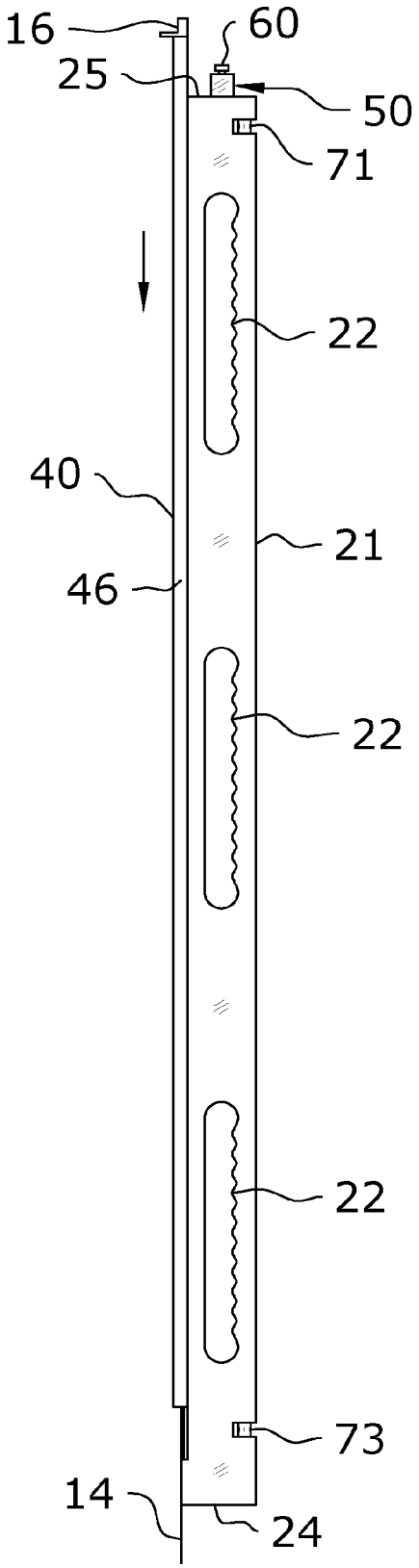

FIG. 3c

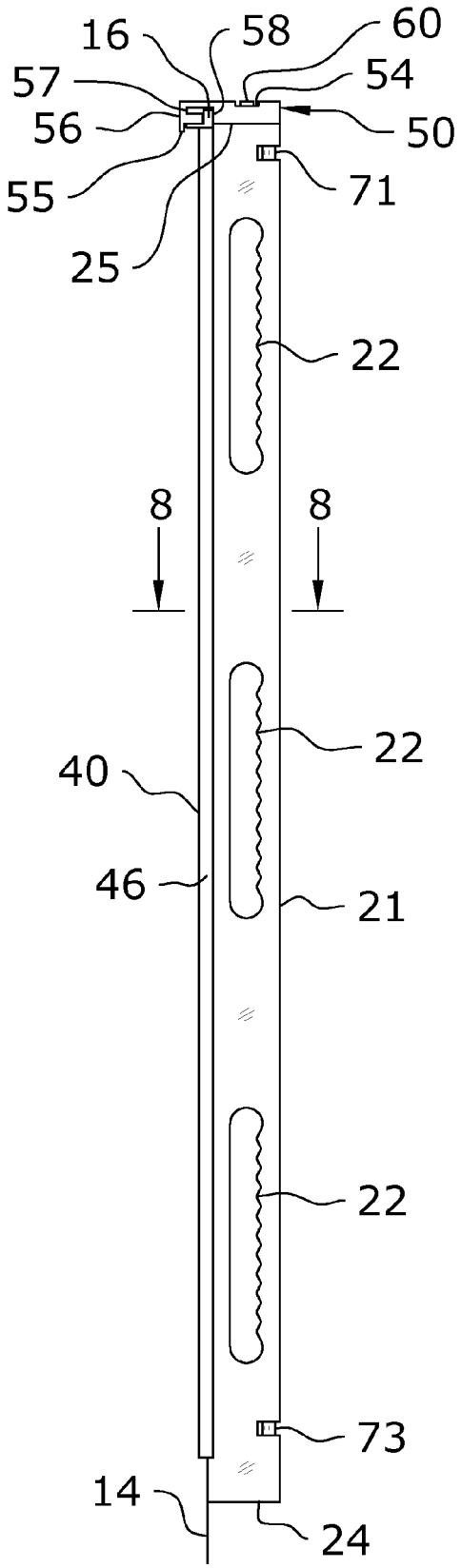

FIG. 3d

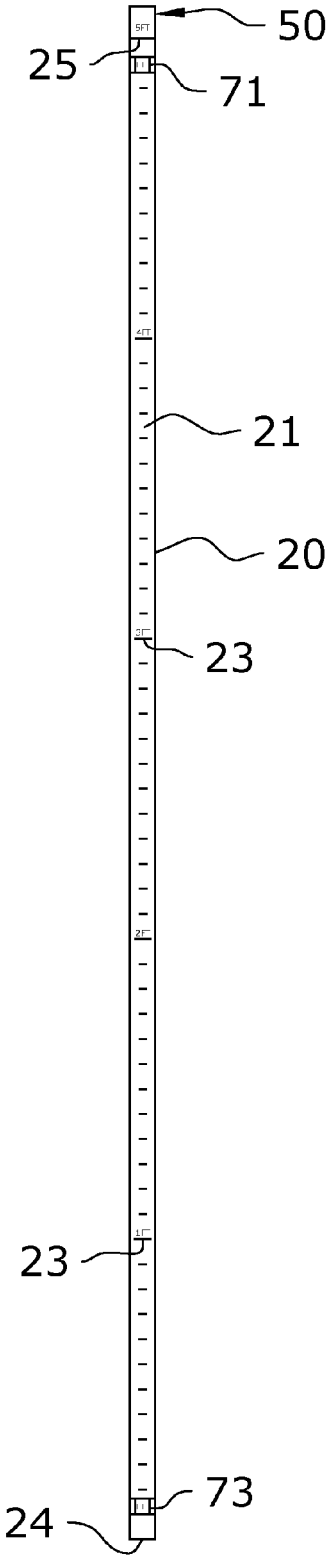

FIG. 4

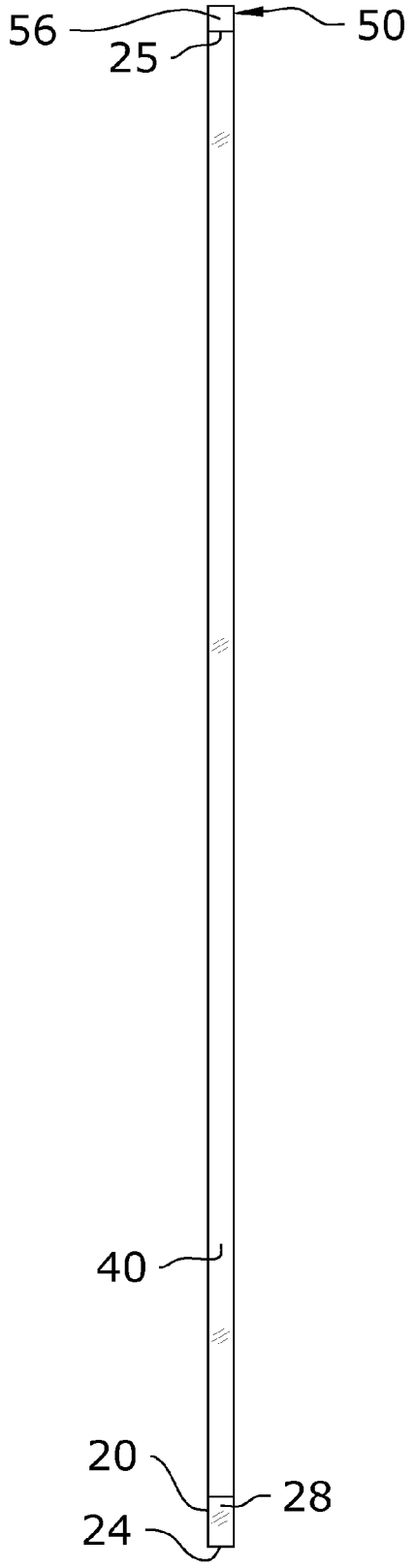

FIG. 5

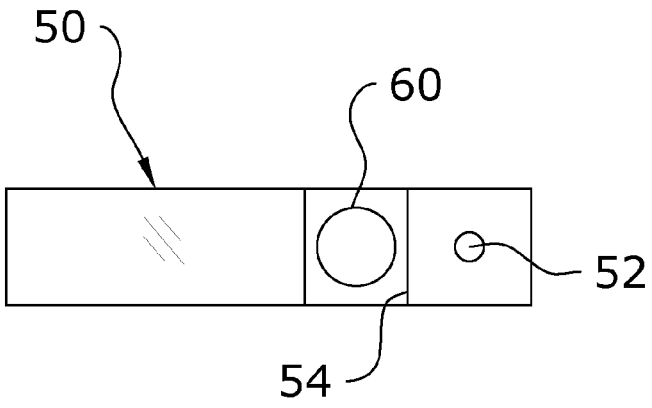

FIG. 6

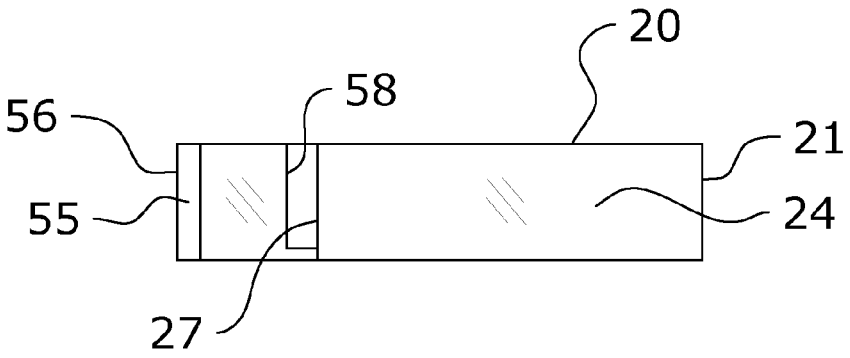

FIG. 7

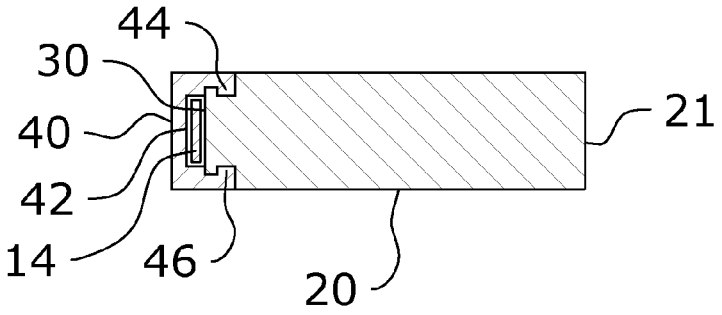

FIG. 8

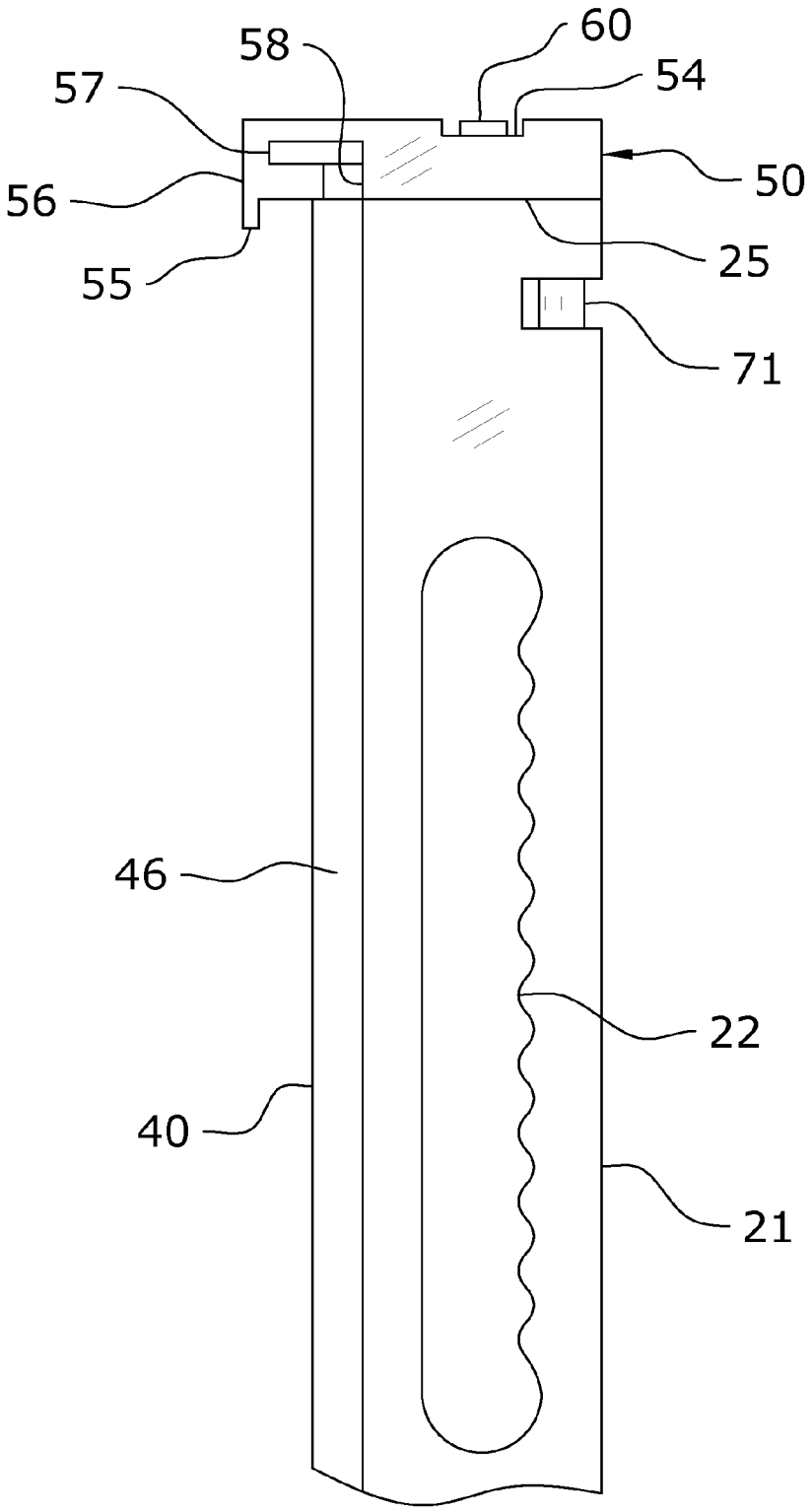

FIG. 9

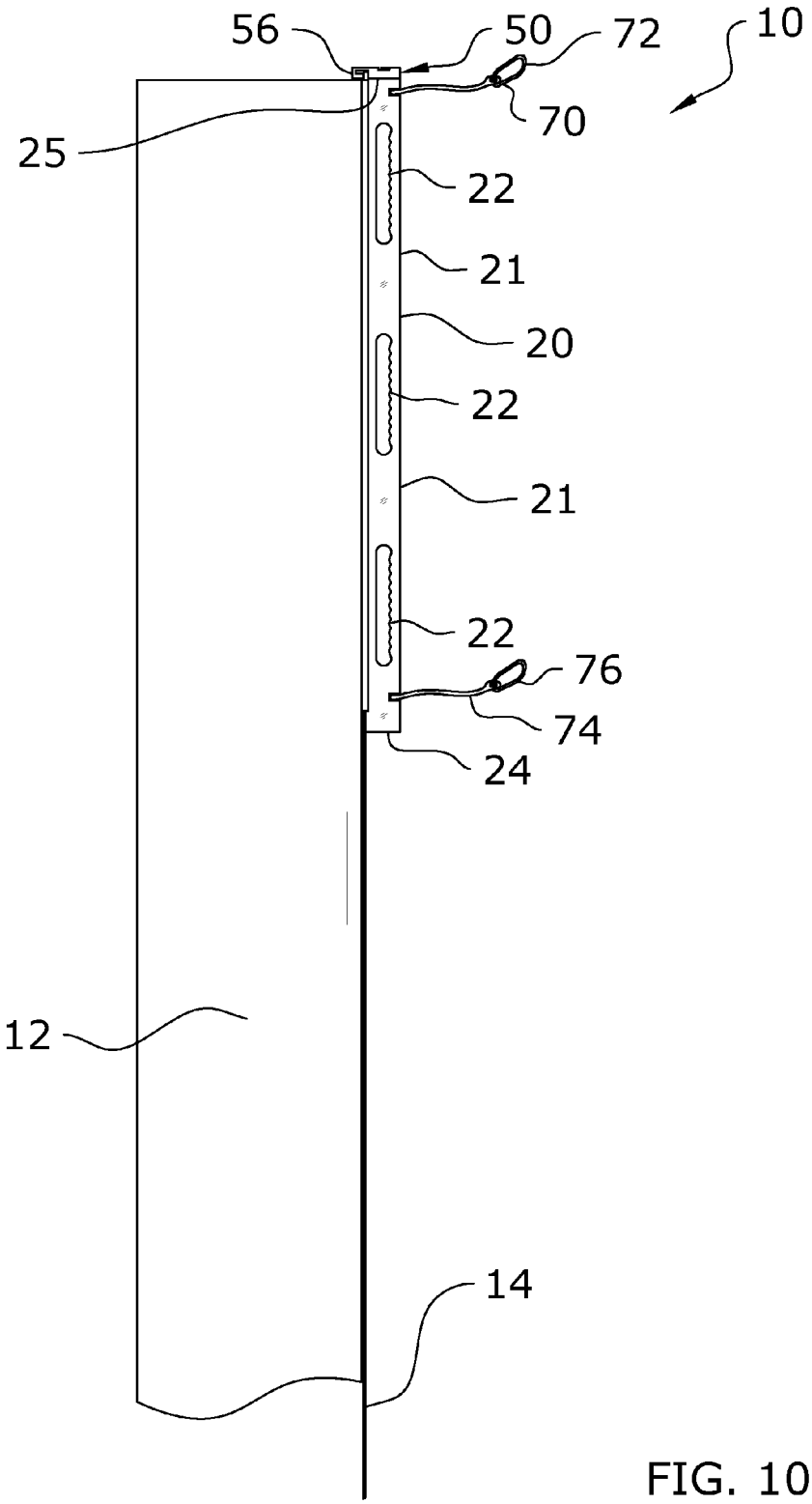

FIG. 10

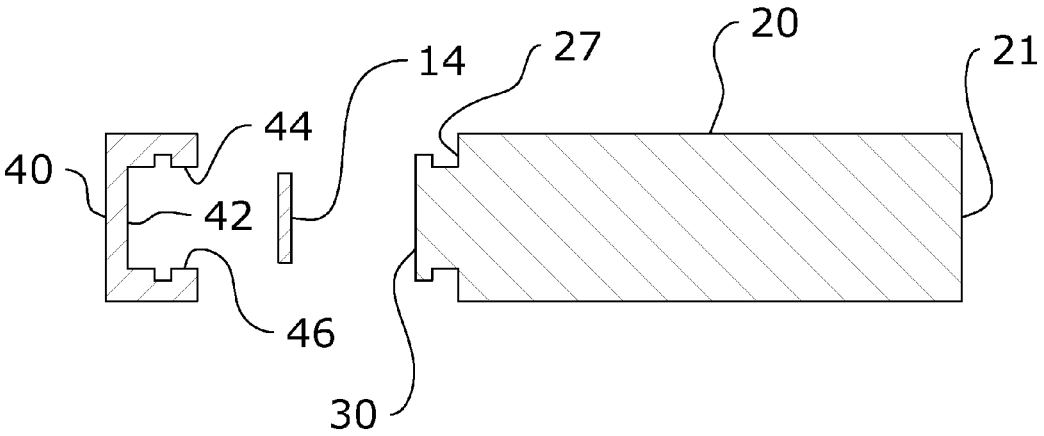

FIG. 11

DRILL PIPE MEASURING SYSTEM

CROSS REFERENCE TO RELATED APPLICATIONS

I hereby claim benefit under Title 35, United States Code, Section 119(e) of U.S. provisional patent application Ser. No. 61/877,450 filed Sep. 13, 2013. The 61/877,450 application is hereby incorporated by reference into this application.

STATEMENT REGARDING FEDERALLY SPONSORED RESEARCH OR DEVELOPMENT

Not applicable to this application.

BACKGROUND OF THE INVENTION

1. Field of the Invention

The present invention relates generally to drill pipe measuring devices and more specifically it relates to a drill pipe measuring system for efficiently and safely measuring drill pipe on an oil derrick.

2. Description of the Related Art

Any discussion of the related art throughout the specification should in no way be considered as an admission that such related art is widely known or forms part of common general knowledge in the field.

Measuring the drill pipe on an oil derrick or other type of derrick requires a device to secure the measuring tape that goes up and down the vertical pipe area being measured which is also known as "strapping pipe". A conventional device used to assist in measuring drill pipe is a broomstick with the measuring tape attached to the broomstick via tape (e.g. duct tape). However, the usage of a broomstick does not meet the safety rules used by various companies or safety organizations such as the Occupational Safety and Health Administration (OSHA) because the tape is not completely tied off to the measuring device. In addition, it is a violation of OSHA's rules and company safety rules to bring the broomstick above the head of a worker without having it tied off at all times and secured properly.

Because of the inherent problems with the related art, there is a need for a new and improved drill pipe measuring system for efficiently and safely measuring drill pipe on an oil derrick.

BRIEF SUMMARY OF THE INVENTION

The invention generally relates to a drill pipe measuring system which includes a main member, a tongue member extending outwardly from the main member, a retaining member having a groove that slidably receives the tongue member to secure a measuring tape adjacent to the tongue member and a securing member that is movably attached to an upper end of the main member to selectively retain a hook piece of the measuring tape. The securing member includes a pivot pin that the securing member pivots about and a locking member. When the locking member is in a released state, the securing member is allowed to move with respect to the main member. When the locking member is in the locked state, the securing member is prevented from moving with respect to the main member.

There has thus been outlined, rather broadly, some of the features of the invention in order that the detailed description thereof may be better understood, and in order that the present contribution to the art may be better appreciated. There are additional features of the invention that will be described

hereinafter and that will form the subject matter of the claims appended hereto. In this respect, before explaining at least one embodiment of the invention in detail, it is to be understood that the invention is not limited in its application to the details of construction or to the arrangements of the components set forth in the following description or illustrated in the drawings. The invention is capable of other embodiments and of being practiced and carried out in various ways. Also, it is to be understood that the phraseology and terminology employed herein are for the purpose of the description and should not be regarded as limiting.

BRIEF DESCRIPTION OF THE DRAWINGS

Various other objects, features and attendant advantages of the present invention will become fully appreciated as the same becomes better understood when considered in conjunction with the accompanying drawings, in which like reference characters designate the same or similar parts throughout the several views, and wherein:

FIG. **1** is an upper perspective view of the present invention.

FIG. **2***a* is an exploded upper perspective view of the present invention with a measuring tape.

FIG. **2***b* is an exploded upper perspective view of the present invention with the measuring tape positioned against the tongue member of the main member.

FIG. **2***c* is an exploded upper perspective view of the present invention with the measuring tape positioned against the tongue member of the main member and the retaining member partially connected to the main member.

FIG. **2***d* is an exploded upper perspective view of the present invention with the measuring tape positioned against the tongue member of the main member and the retaining member fully connected to the main member.

FIG. **3***a* is a side view of FIG. **2***a*.

FIG. **3***b* is a side view of FIG. **2***b*.

FIG. **3***c* is a side view of FIG. **2***c*.

FIG. **3***d* is a side view of FIG. **2***d*.

FIG. **4** is a rear view of the present invention illustrating the measurement indicia.

FIG. **5** is a front view of the present invention.

FIG. **6** is a top view of the present invention.

FIG. **7** is a bottom view of the present invention.

FIG. **8** is a cross sectional view taken along line **8-8** of FIG. **3***d*.

FIG. **9** is a magnified side view of the upper portion of the invention.

FIG. **10** is a side view of the present invention connected to the upper end of a drill pipe being measured.

FIG. **11** is a cross sectional view taken along line **11-11** of FIG. **3***a*.

DETAILED DESCRIPTION OF THE INVENTION

A. Overview

Turning now descriptively to the drawings, in which similar reference characters denote similar elements throughout the several views, FIGS. **1** through **11** illustrate a drill pipe measuring system **10**, which comprises a main member **20**, a tongue member **30** extending outwardly from the main member **20**, a retaining member **40** having a groove **42** that slidably receives the tongue member **30** to secure a measuring tape **14** adjacent to the tongue member **30** and a securing member **50** that is movably attached to an upper end **25** of the main member **20** to selectively retain a hook piece **16** of the

measuring tape **14**. The securing member **50** includes a pivot pin **52** that the securing member **50** pivots about and a locking member **60**. When the locking member **60** is in a released state, the securing member **50** is allowed to move with respect to the main member **20**. When the locking member **60** is in the locked state, the securing member **50** is prevented from moving with respect to the main member **20**.

B. Measuring Tape

The measuring tape **14** (a.k.a. tape measure) may be comprised of any elongated device that has measurements printed thereupon to measure a stand of drill pipe **12** or an individual drill pipe **12**. The measuring tape **14** is typically comprised of a flexible ruler device constructed of a metal strip or fiber glass. The measurements printed on the measuring tape **14** may be in feet, inches, meters, centimeters or any combination thereof. The measuring tape **14** includes a hook piece **16** at the distal end thereof that is used to removably connect to the top end of the stand of drill pipe **12** thereby allowing the remaining portion of the measuring tape **14** to be lowered to measure the entire length of the stand of drill pipe **12** (or a single drill pipe **12**). The measuring tape **14** may include a housing that the measuring tape **14** may be wound into and dispensed from.

The measuring tape **14** may have various lengths, but is preferably at least 90 feet in length since a standard length of a stand of drill pipe **12** (typically 2-3 sections of drill pipe **12**) is approximately 90 feet. The total length of the measuring tape **14** may be less than or greater than 90 feet. The stand of drill pipe **12** is vertically orientated on the derrick. The drill pipe **12** is comprised of steel piping that is used on oil derricks to facilitate the drilling of a wellbore and come in various sizes, strengths and lengths (typically 30 to 33 feet in length)

C. Main Member

FIGS. **1** through **5** illustrate the main member **20** having a front side **27**, a rear side **21**, an upper end **25** and a lower end **24**. The measuring tape **14** is positionable near the front side **27** of the main member **20** as illustrated in FIGS. **2***b* and **3***b* of the drawings. The main member **20** is preferably constructed of a plastic material, but may be constructed of various other types of material such as metal, wood or fiberglass. The main member **20** preferably has a generally rectangular cross sectional area as illustrated in FIG. **11** of the drawings.

The main member **20** is preferably comprised of an elongated structure as illustrated in FIGS. **1** through **5** of the drawings, however, the main member **20** may be comprised of a non-elongated structure. The main member **20** in combination with the securing member **50** is preferably at least five feet in length to allow the main member **20** to be used for shorter measurements. FIG. **4** illustrates the rear side **21** of the main member **20** including measurement indicia **23** between the upper end **25** and the lower end **24** of the main member **20**.

The front side **27** of the main member **20** includes a tongue member **30** that extends outwardly opposite of the rear side **21** of the main member **20**. The retaining member **40** slidably connects to the tongue member **30** from the top end of tongue member **30** thereby defining an elongated passage between the retaining member **40** and the tongue member **30** that receives and retains the measuring tape **14** as illustrated in FIG. **8** of the drawings.

As illustrated in FIGS. **8** and **11** of the drawings, the tongue member **30** has a T-shaped cross sectional shape to allow for slidable reception of the retaining member **40**. The T-shaped cross sectional shape of the tongue member **30** forms a pair of slots on opposing sides of the tongue member **30** that receives the jaws **44**, **46** of the retaining member **40** in a slidable manner. The tongue member **30** may have various other types of cross sectional shapes suitable for slidably receiving the retaining member **40**.

The tongue member **30** extends from the upper end **25** of the main member **20** along a substantial length of the main member **20**. The retaining member **40** preferably extends along at least ninety percent of a length of the main member **20** from the upper end **25** towards the lower end **24**. The tongue member **30** preferably does not extend to the lower end **24** and instead preferably terminates at a stopper portion **28** of the main member **20**.

The main member **20** further includes one or more grip openings **22** that allow for a user to extend their fingers through to grasp the main member **20** as illustrated in FIGS. **1** through **3***d* of the drawings. The grip openings **22** are comprised of an elongated opening structure and preferably include gripping on the side of the opening closest to the rear side **21** of the main member **20** as best illustrated in FIGS. **3***a* through **3***d* and **9** of the drawings.

An upper strap **70** with an upper hook **72** is connected to an upper portion of the main member **20** and a lower strap **74** with a lower hook **76** is connected to a lower portion of the main member **20**. The straps **70**, **74** are used to secure the present invention when used in an elevated state to comply with rules and regulations of OSHA and of businesses. The main member **20** includes an upper cutout that includes an upper connector **71** that the upper strap **70** is attached to and a lower cutout that includes a lower connector **73** that the lower strap **74** is attached to as illustrated in FIGS. **3***a* through **3***d* of the drawings.

D. Retaining Member

The retaining member **40** is removably connectable to the main member **20** to retain the measuring tape **14** near the front side **27** of the main member **20**. As illustrated in FIGS. **2***c* and **3***c* of the drawings, the retaining member **40** is slidably connectable to the main member **20** to retain the measuring tape **14** within a passage formed between the retaining member **40** and the main member **20**. The retaining member **40** is comprised of an elongated structure that may have a length the same as the main member **20** but is preferably less than the length of the main member **20**.

The passage formed between the retaining member **40** and the main member **20** extends along the entire length of the retaining member **40** preferably and has a cross sectional shape larger than the cross sectional shape of the measuring tape **14** as illustrated in FIG. **8** of the drawings. The passage formed between the retaining member **40** and the main member **20** is also smaller than a hook piece **16** of the measuring tape **14** thereby preventing the measuring tape **14** from passing through the passage when the hook piece **16** of the measuring tape **14** is adjacent to the upper end **25** of the main member **20**.

The retaining member **40** includes a groove **42** that extends along the entire length of the retaining member **40** thereby forming a lower opening and an upper opening at the respective ends of the retaining member **40**. The groove **42** of the retaining member **40** slidably receives the tongue member **30** to form a sliding connection system and with the interior wall facing the tongue member **30** distally spaced apart sufficiently to receive the measuring tape **14** between thereof. The retaining member **40** is parallel with respect to the front side **27** of the main member **20** when attached to the main member **20** as illustrated in FIGS. **3***c* and **3***d* of the drawings.

The retaining member **40** has a generally U-shaped cross sectional shape as best illustrated in FIG. **11** of the drawings. The retaining member **40** includes a first jaw **44** and a second jaw **46** opposite of the first jaw **44**, wherein the jaws are on opposite sides of the groove **42**, wherein the first jaw **44** defines a first receiver slot, wherein the second jaw **46** defines a second receiver slot, and wherein the receiver slots slidably receive a distal cross portion of the tongue member **30**.

E. Securing Member

The securing member **50** is movably attached to the upper end **25** of the main member **20** to selectively retain the hook piece **16** of the measuring tape **14** in a secured position and to selectively retain the retaining member **40** in a substantially non-movable state with respect to the main member **20**. The securing member **50** prevents the retaining member **40** from being removed from the main member **20** when the securing member **50** is in a locked state. FIGS. **1** through **6** and **9** best illustrate the securing member **50**.

The securing member **50** includes a pivot pin **52** that extends from the securing member **50** to and into the upper end **25** of the main member **20**. The pivot pin **52** prevents the securing member **50** from extending outwardly away from the upper end **25** of the main member **20** while allowing the securing member **50** to freely pivot about the upper end **25** of the main member **20** when the locking member **60** is released. As illustrated in FIGS. **2***a* and **2***b* of the drawings, the securing member **50** pivots about the pivot pin **52**.

The locking member **60** extends from the securing member **50** to selectively engage the main member **20** to prevent movement of the securing member **50**. When the locking member **60** is in a released state the securing member **50** is allowed to move (e.g. pivot) with respect to the main member **20** and wherein when the locking member **60** is in a locked state the securing member **50** is prevented from moving with respect to the main member **20**. The locking member **60** extends through the securing member **50** offset a distance from the pivot pin **52** to prevent rotation of the securing member **50** when the locking member **60** is secured to the main member **20**.

The locking member **60** is preferably comprised of a threaded device such as a threaded shaft that is threadably received within a threaded aperture **26** within the upper end **25** of the main aperture. The threaded aperture **26** within the upper end **25** of the main member **20** may be comprised of a female threaded metal insert that is aligned with the locking member **60** when the securing member **50** is positioned within the locked state as illustrated in FIGS. **1**, **2***d* and **9** of the drawings. The locking member **60** preferably includes a head portion that is broader than the threaded shaft portion of the locking member **60**. The head portion is preferably received within a recessed cutout within the securing member **50** so that when the locking member **60** locks the securing member **50** the head portion does not extend above the outer surface of the securing member **50** as best illustrated in FIGS. **1** and **9** of the drawings.

The securing member **50** further includes a distal portion **56** that extends outwardly from the main member **20**. A catch member **55** extends downwardly from the distal portion **56** to allow for catchable engagement of the top end of a drill pipe **12** being measured. The catch member **55** extends downwardly as best illustrated in FIG. **9** of the drawings.

As further shown in FIG. **9** of the drawings, the securing head includes a first slot **57** that extends horizontally through a portion of the securing member **50** to receive a portion of the hook piece **16** of the measuring tape **14**. The securing head further includes a second slot **58** that extends vertically from the first slot **57** that allows for passage of the measuring tape **14**. The second slot **58** is narrow enough to prevent movement of the retaining member **40** when the securing member **50** is in the locked state. Neither the first slot **57** or the second slot **58** have to pass completely through the securing member **50** just as long as they are sufficient to receive the hook piece **16** of the measuring tape **14** and the measuring tape **14**.

F. Operation of Preferred Embodiment

In use, the user loosens the locking member **60** to an unlocked state and then pivots the securing member **50** outwardly as illustrated in FIG. **2***a* of the drawings. The user then positions the measuring tape **14** adjacent to the front side **27** of the main member **20** as illustrated in FIGS. **2***b* and **3***b* of the drawings. The user then slides the retaining member **40** downwardly from the upper end **25** of the main member **20** along the tongue member **30** until the retaining member **40** engages the stopper portion **28** of the main member **20** with the measuring tape **14** positioned between the retaining member **40** and the main member **20**. The user then pivots the securing member **50** back to the original position and then secures the locking member **60** to the locked state to prevent movement of the securing member **50** as illustrated in FIGS. **2***d* and **3***d* of the drawings. The present invention is then lifted upwardly via an elevator or other lifting device on the derrick where another individual at the upper portion of the derrick is able to secure one of the straps **70**, **74** for safety reasons and then hook the distal portion **56** of the securing member **50** to the top end of the drill pipe **12** being measured as illustrated in FIG. **10** of the drawings. The measuring tape **14** extends along the length of the stand of drill pipe **12** being measured to the bottom thereof wherein another user is able to read and record the length of the stand of drill pipe **12**. This process continues until no further measurements are required and then the present invention is lowered.

Unless otherwise defined, all technical and scientific terms used herein have the same meaning as commonly understood by one of ordinary skill in the art to which this invention belongs. Although methods and materials similar to or equivalent to those described herein can be used in the practice or testing of the present invention, suitable methods and materials are described above. All publications, patent applications, patents, and other references mentioned herein are incorporated by reference in their entirety to the extent allowed by applicable law and regulations. The present invention may be embodied in other specific forms without departing from the spirit or essential attributes thereof, and it is therefore desired that the present embodiment be considered in all respects as illustrative and not restrictive. Any headings utilized within the description are for convenience only and have no legal or limiting effect.

The invention claimed is:

1. A drill pipe measuring device, comprising:

a main member having a front side, a rear side, an upper end and a lower end, wherein a measuring tape is positionable near said front side; and

a retaining member removably connectable to said main member to retain said measuring tape near said front side of said main member, wherein said retaining member extends along at least ninety percent of a length of said main member from said upper end towards said lower end.

2. The drill pipe measuring device of claim **1**, wherein said rear side includes measurement indicia between said upper end and said lower end of said main member.

3. The drill pipe measuring device of claim 1, wherein said retaining member is slidably connectable to said main member.

4. The drill pipe measuring device of claim 1, wherein said front side of said main member includes a tongue member, wherein said retaining member slidably connects to said tongue member defining a passage between thereof that receives said measuring tape.

5. The drill pipe measuring device of claim 4, wherein said tongue member has a T-shaped cross sectional shape.

6. The drill pipe measuring device of claim 5, wherein said retaining member includes a first jaw and a second jaw opposite of said first jaw, wherein said jaws are on opposite sides of said groove, wherein said first jaw defines a first receiver slot, wherein said second jaw defines a second receiver slot, and wherein said receiver slots slidably receive a distal cross portion of said tongue member.

7. The drill pipe measuring device of claim 4, wherein said retaining member includes a groove that slidably receives said tongue member.

8. The drill pipe measuring device of claim 4, wherein said passage is smaller than a hook piece of said measuring tape thereby preventing said measuring tape from passing through said passage when said hook piece of said measuring tape is adjacent to said upper end of said main member.

9. The drill pipe measuring device of claim 4, wherein said tongue member extends from said upper end of said main member along a substantial length of said main member, wherein said tongue member does not extend to said lower end.

10. A drill pipe measuring device, comprising:

a main member having a front side, a rear side, an upper end and a lower end, wherein a measuring tape is positionable near said front side;

a retaining member removably connectable to said main member to retain said measuring tape near said front side of said main member; and

a securing member that is movably attached to said upper end of said main member to selectively retain a hook piece of said measuring tape and to selectively retain said retaining member in a substantially non-movable state with respect to said main member, wherein said securing member prevents said retaining member from being removed from said main member when said securing member is in a locked state.

11. The drill pipe measuring device of claim 10, wherein said rear side includes measurement indicia between said upper end and said lower end of said main member.

12. The drill pipe measuring device of claim 10, wherein said retaining member is slidably connectable to said main member.

13. The drill pipe measuring device of claim 10, wherein said front side of said main member includes a tongue member, wherein said retaining member slidably connects to said tongue member defining a passage between thereof that receives said measuring tape.

14. The drill pipe measuring device of claim 13, wherein said tongue member has a T-shaped cross sectional shape.

15. The drill pipe measuring device of claim 14, wherein said retaining member includes a first jaw and a second jaw opposite of said first jaw, wherein said jaws are on opposite sides of said groove, wherein said first jaw defines a first receiver slot, wherein said second jaw defines a second receiver slot, and wherein said receiver slots slidably receive a distal cross portion of said tongue member.

16. The drill pipe measuring device of claim 13, wherein said retaining member includes a groove that slidably receives said tongue member.

17. The drill pipe measuring device of claim 13, wherein said passage is smaller than a hook piece of said measuring tape thereby preventing said measuring tape from passing through said passage when said hook piece of said measuring tape is adjacent to said upper end of said main member.

18. The drill pipe measuring device of claim 13, wherein said tongue member extends from said upper end of said main member along a substantial length of said main member, wherein said retaining member extends along at least ninety percent of a length of said main member from said upper end towards said lower end, and wherein said tongue member does not extend to said lower end.

19. The drill pipe measuring device of claim 10, wherein said securing member includes a pivot pin that extends from said securing member to said upper end of said main member and a locking member that extends from said securing member to selectively engage said main member to prevent movement of said securing member, wherein said securing member pivots about said pivot pin, wherein when said locking member is in a released state said securing member is allowed to move with respect to said main member and wherein when said locking member is in a locked state said securing member is prevented from moving with respect to said main member.

20. A drill pipe measuring device, comprising:

a main member having a front side, a rear side, an upper end and a lower end, wherein a measuring tape is positionable near said front side; and

a retaining member removably connectable to said main member to retain said measuring tape near said front side of said main member;

wherein said front side of said main member includes a tongue member, wherein said retaining member slidably connects to said tongue member defining a passage between thereof that receives said measuring tape;

wherein said tongue member has a T-shaped cross sectional shape;

wherein said retaining member includes a first jaw and a second jaw opposite of said first jaw, wherein said jaws are on opposite sides of said groove, wherein said first jaw defines a first receiver slot, wherein said second jaw defines a second receiver slot, and wherein said receiver slots slidably receive a distal cross portion of said tongue member.

21. A drill pipe measuring device, comprising:

a main member having a front side, a rear side, an upper end and a lower end, wherein a measuring tape is positionable near said front side; and

a retaining member removably connectable to said main member to retain said measuring tape near said front side of said main member;

wherein said front side of said main member includes a tongue member, wherein said retaining member slidably connects to said tongue member defining a passage between thereof that receives said measuring tape;

wherein said passage is smaller than a hook piece of said measuring tape thereby preventing said measuring tape from passing through said passage when said hook piece of said measuring tape is adjacent to said upper end of said main member.

22. A drill pipe measuring device, comprising:

a main member having a front side, a rear side, an upper end and a lower end, wherein a measuring tape is positionable near said front side; and

a retaining member removably connectable to said main member to retain said measuring tape near said front side of said main member;

wherein said front side of said main member includes a tongue member, wherein said retaining member slidably connects to said tongue member defining a passage between thereof that receives said measuring tape;

wherein said tongue member extends from said upper end of said main member along a substantial length of said main member, wherein said tongue member does not extend to said lower end.

* * * * *