US009199822B1

(12) **United States Patent**
Pegg

(10) **Patent No.: US 9,199,822 B1**
(45) **Date of Patent: Dec. 1, 2015**

(54) **SYSTEMS AND METHODS FOR FOLDING A STACK OF SUBSTRATE SHEETS**

(75) Inventor: **Thomas C. Pegg**, West Olive, MI (US)

(73) Assignee: **EXPRESS SCRIPTS, INC.**, St. Louis, MO (US)

(*) Notice: Subject to any disclaimer, the term of this patent is extended or adjusted under 35 U.S.C. 154(b) by 675 days.

(21) Appl. No.: **13/252,810**

(22) Filed: **Oct. 4, 2011**

Related U.S. Application Data

(60) Provisional application No. 61/422,683, filed on Dec. 14, 2010.

(51) **Int. Cl.**

B65H 37/06	(2006.01)
B31F 1/08	(2006.01)
B65H 45/18	(2006.01)
B65H 45/30	(2006.01)

(52) **U.S. Cl.**
CPC ***B65H 45/18*** (2013.01); ***B65H 45/30*** (2013.01); *B65H 2301/50* (2013.01); *B65H 2801/24* (2013.01)

(58) **Field of Classification Search**
CPC B65H 45/00; B65H 45/14; B65H 45/168; B65H 45/30; B65H 45/18; B65H 45/04; B65H 2404/612; B65H 2404/6111; B65H 2405/1114; B65B 63/04; B31F 1/08
USPC 493/454, 444, 440, 419, 427, 434, 435, 493/437, 442, 445; 53/429, 120; 270/32, 41
See application file for complete search history.

(56) **References Cited**

U.S. PATENT DOCUMENTS

3,747,917	A *	7/1973	Roda	493/14
3,973,373	A *	8/1976	Williams et al.	53/120
6,817,605	B1 *	11/2004	Bohn	270/37
7,152,856	B2 *	12/2006	Kamiya et al.	270/37
7,326,166	B2	2/2008	Sytema	
7,489,898	B2 *	2/2009	Hayashi	G03G 15/6538 399/406
8,113,499	B2 *	2/2012	Kushida	B65H 29/58 270/37
2002/0025207	A1 *	2/2002	Yoshie et al.	399/407
2010/0314049	A1 *	12/2010	Yamauchi	B65H 37/04 156/387

* cited by examiner

Primary Examiner — Gloria R Weeks
Assistant Examiner — Justin Citrin
(74) *Attorney, Agent, or Firm* — Bryan Cave LLP

(57) **ABSTRACT**

Systems and methods for folding a stack of substrate sheets are provided. The system may include a roller assembly and a positioning mechanism. The roller assembly is configured for folding the stack of substrate sheets and the positioning mechanism is configured to position the substrate or stack for entry into the roller assembly. The positioning mechanism includes an upper curved form and a lower curved form to guide the stack of substrate sheets into a curved position for folding. The positioning mechanism further includes a folding blade positioned to extend through the gap between the upper and lower curved forms. The roller assembly can move the folded stack of substrate sheets in at least two directions.

21 Claims, 14 Drawing Sheets

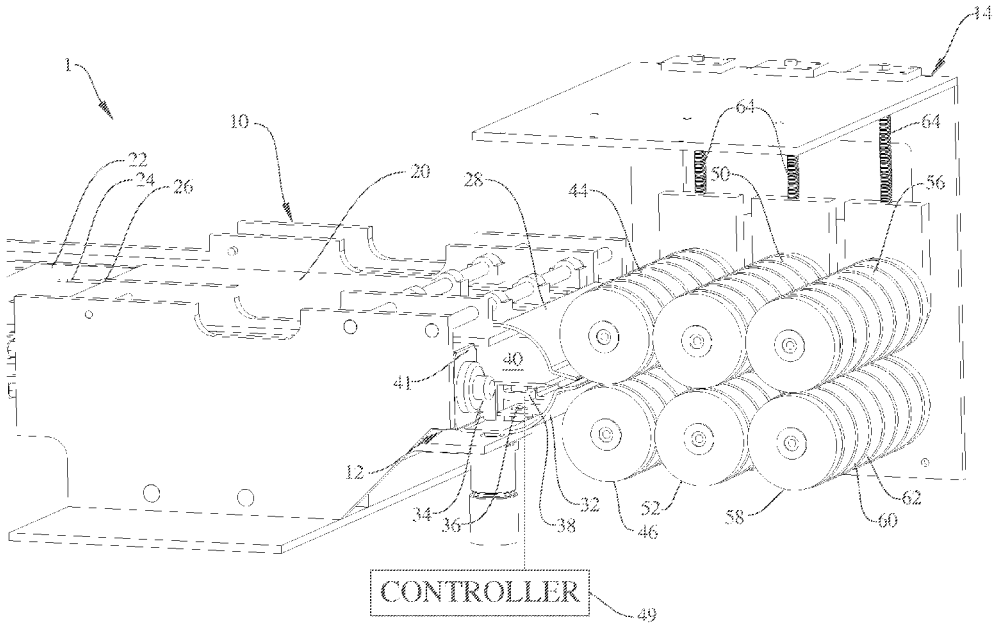

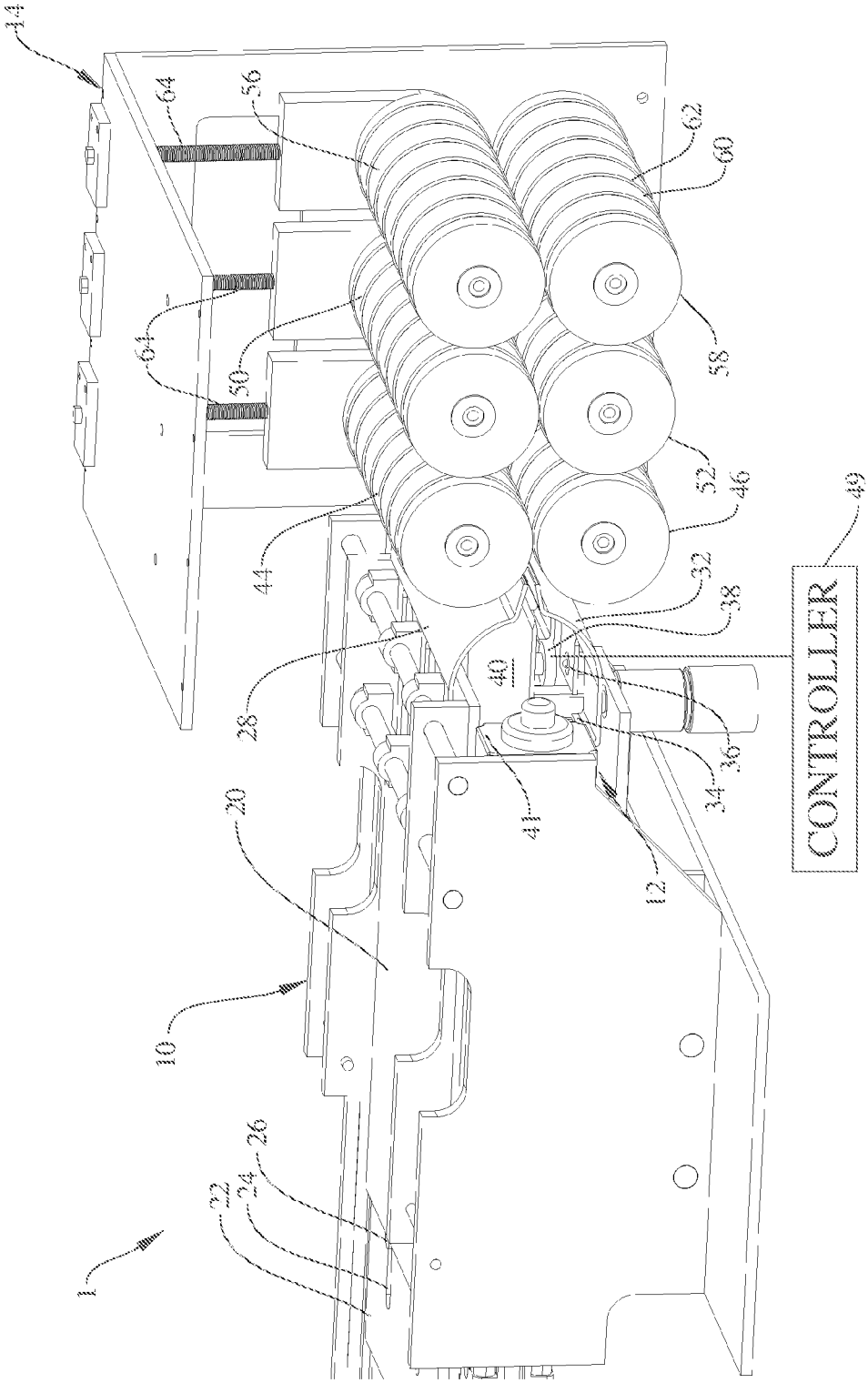
14
64
56
62
60
64
50
58
52
46
44
32
38
40
28
36
34
41
12
20
10
26
24
22
1
CONTROLLER
49

Fig.1

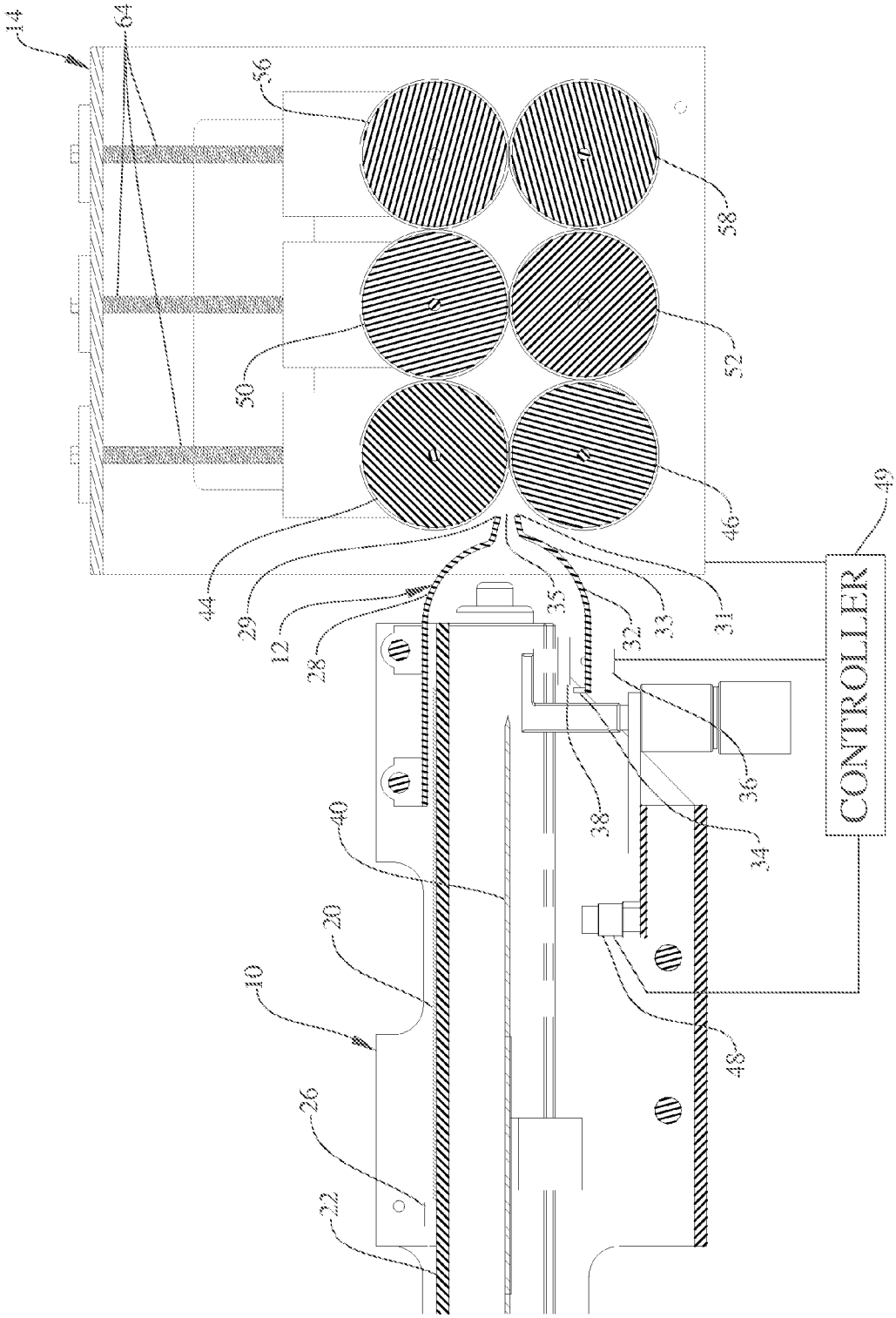
14
64
56
58
50
52
44
46
29
12
28
35
32
33
31
49
CONTROLLER
36
38
34
40
20
10
48
26
22

Fig. 2

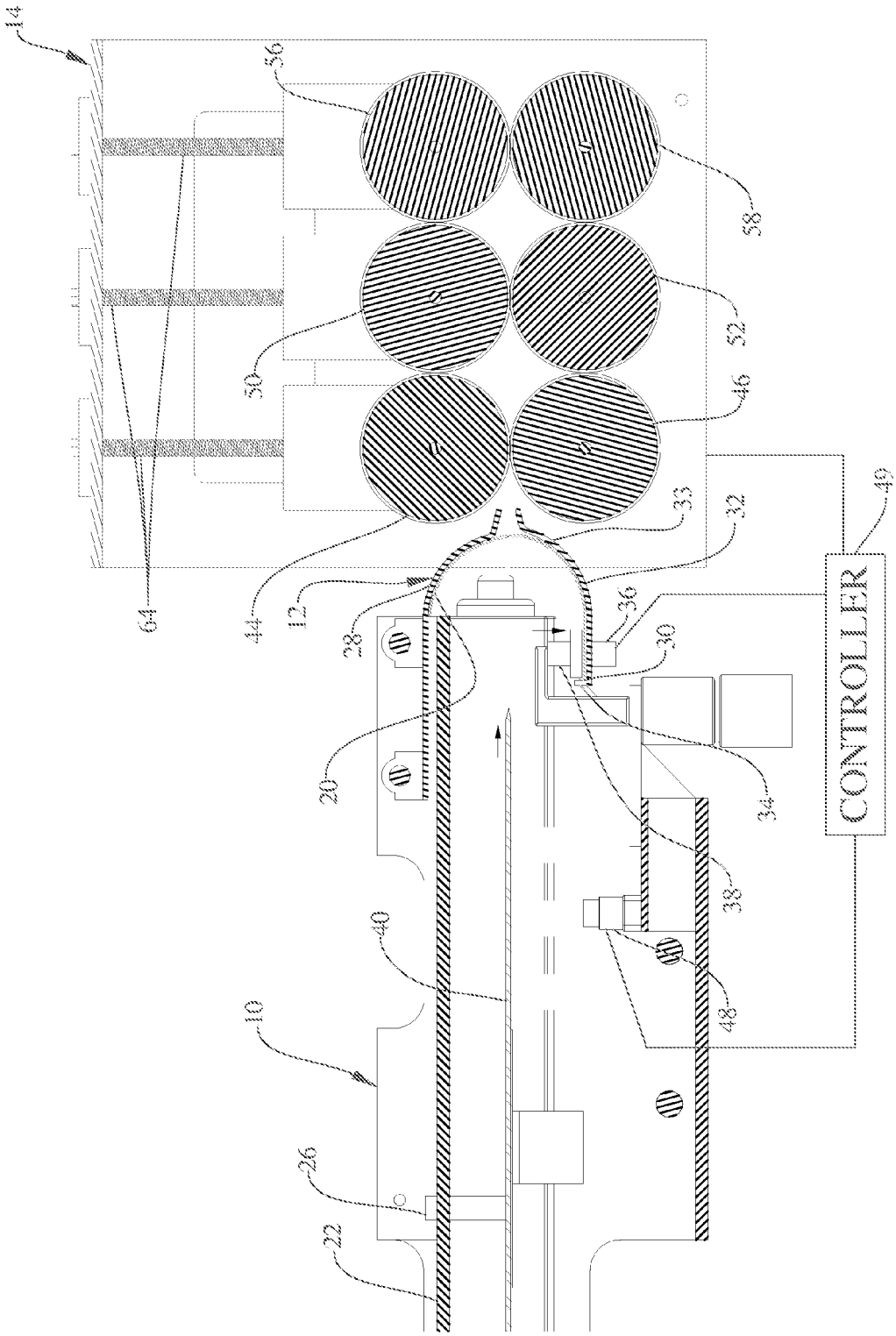
14
56
58
52
50
46
64
44
12
28
20
33
32
36
30
34
38
40
48
10
26
22
49
CONTROLLER

Fig.3

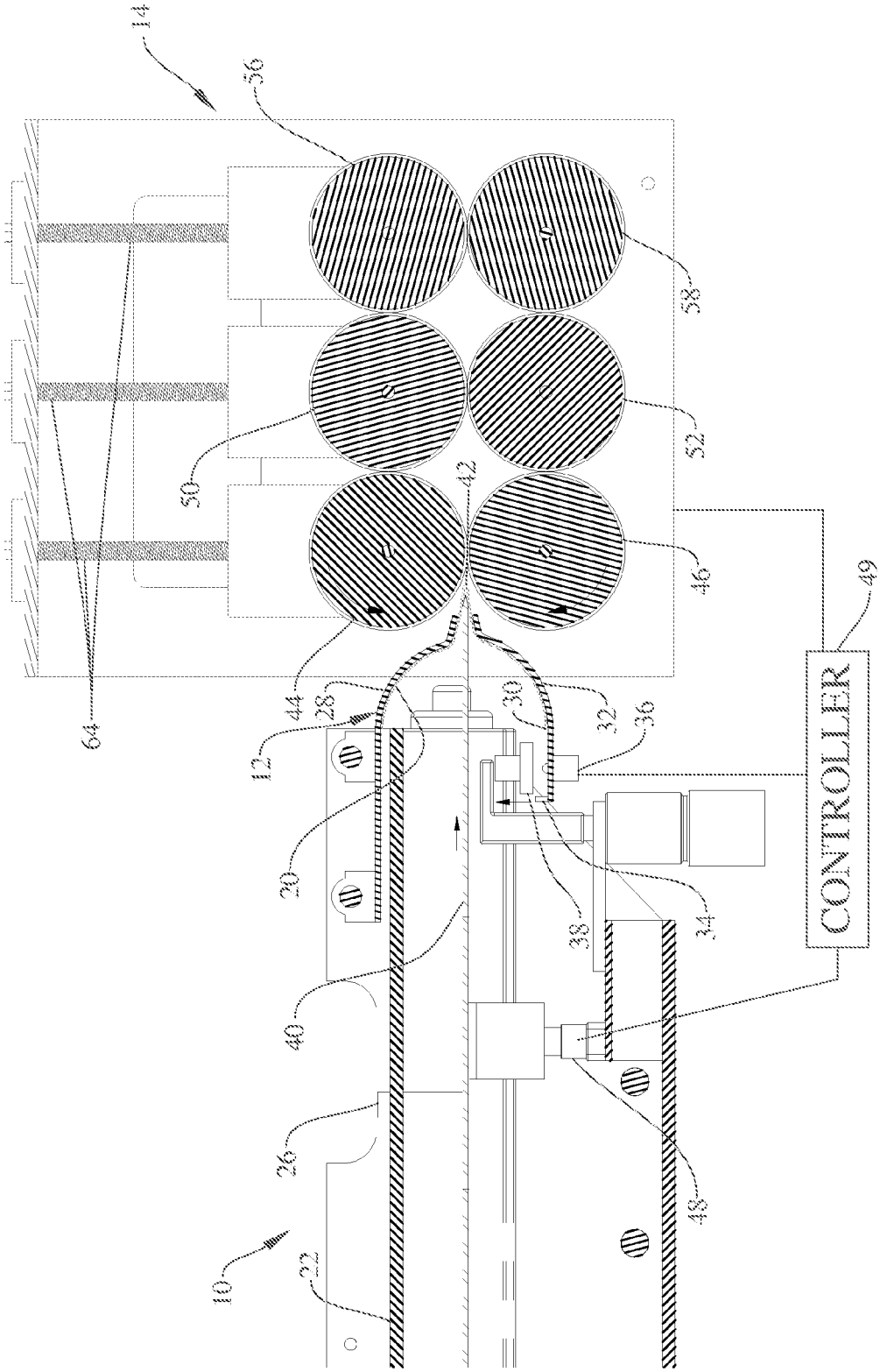
14
56
58
52
50
42
46
49
CONTROLLER
64
44
28
30
32
36
12
20
38
34
40
26
48
10
22

Fig.4

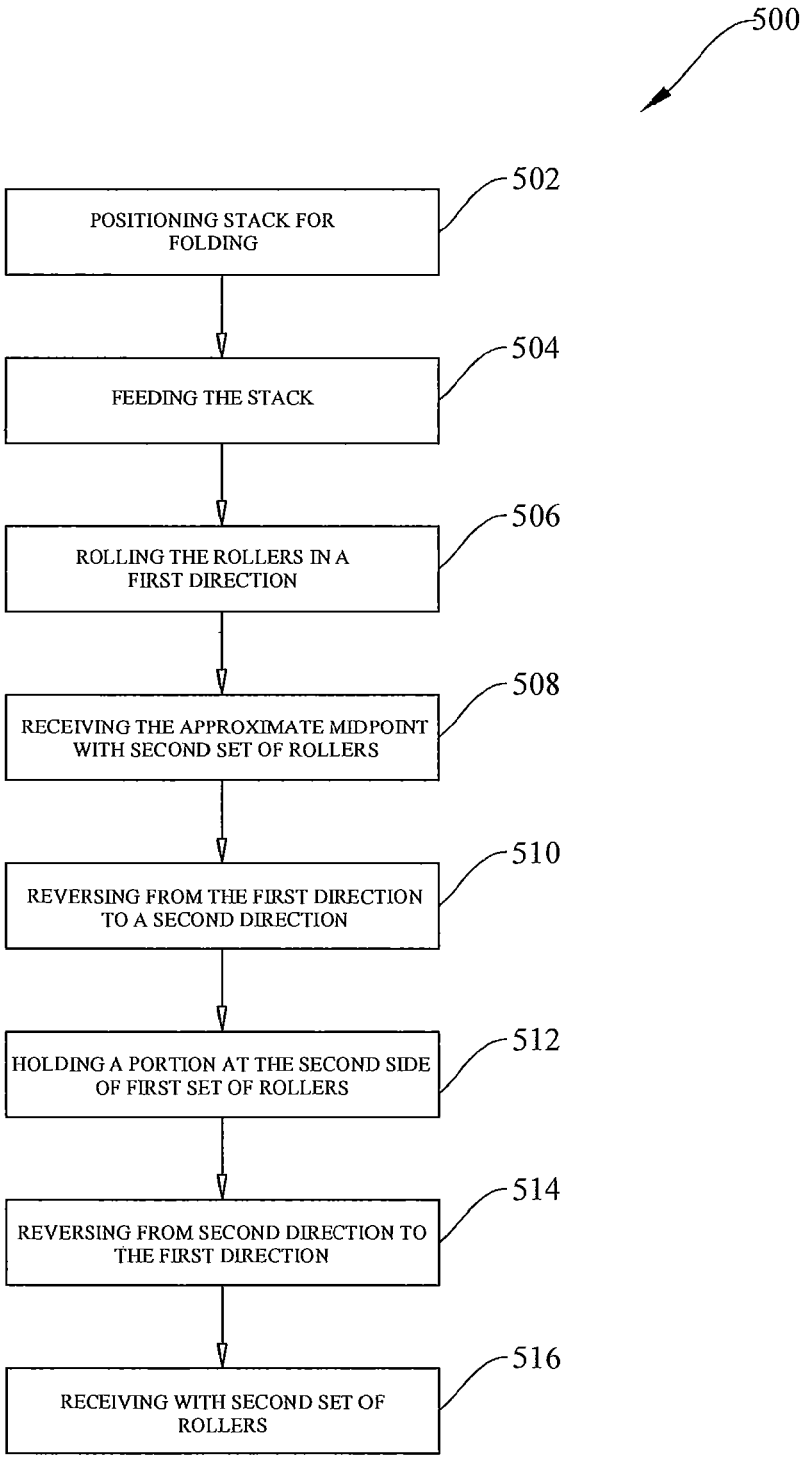
500
502
POSITIONING STACK FOR FOLDING
504
FEEDING THE STACK
506
ROLLING THE ROLLERS IN A FIRST DIRECTION
508
RECEIVING THE APPROXIMATE MIDPOINT WITH SECOND SET OF ROLLERS
510
REVERSING FROM THE FIRST DIRECTION TO A SECOND DIRECTION
512
HOLDING A PORTION AT THE SECOND SIDE OF FIRST SET OF ROLLERS
514
REVERSING FROM SECOND DIRECTION TO THE FIRST DIRECTION
516
RECEIVING WITH SECOND SET OF ROLLERS

Fig.5

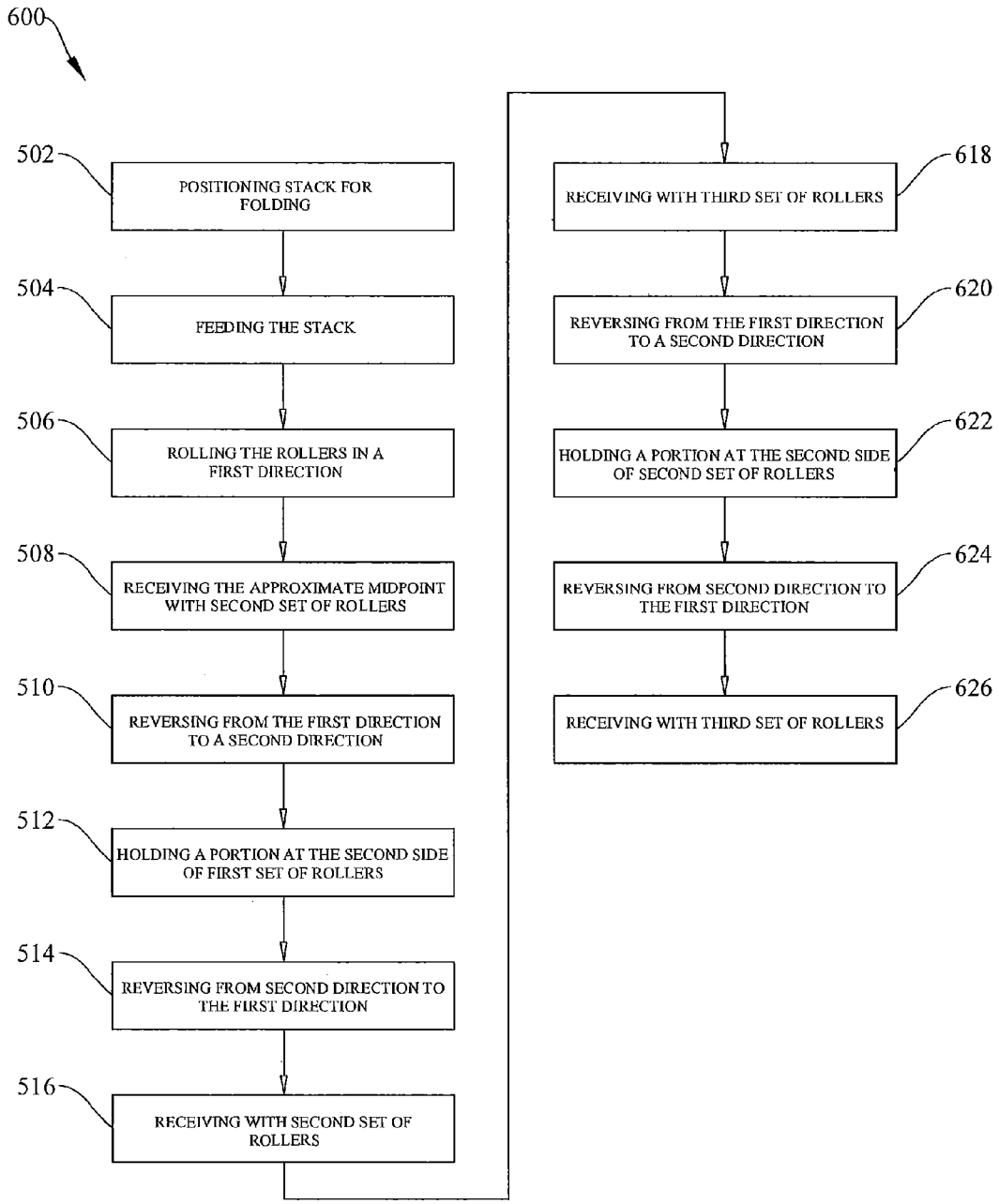
600
502
POSITIONING STACK FOR FOLDING
504
FEEDING THE STACK
506
ROLLING THE ROLLERS IN A FIRST DIRECTION
508
RECEIVING THE APPROXIMATE MIDPOINT WITH SECOND SET OF ROLLERS
510
REVERSING FROM THE FIRST DIRECTION TO A SECOND DIRECTION
512
HOLDING A PORTION AT THE SECOND SIDE OF FIRST SET OF ROLLERS
514
REVERSING FROM SECOND DIRECTION TO THE FIRST DIRECTION
516
RECEIVING WITH SECOND SET OF ROLLERS
618
RECEIVING WITH THIRD SET OF ROLLERS
620
REVERSING FROM THE FIRST DIRECTION TO A SECOND DIRECTION
622
HOLDING A PORTION AT THE SECOND SIDE OF SECOND SET OF ROLLERS
624
REVERSING FROM SECOND DIRECTION TO THE FIRST DIRECTION
626
RECEIVING WITH THIRD SET OF ROLLERS

Fig.6

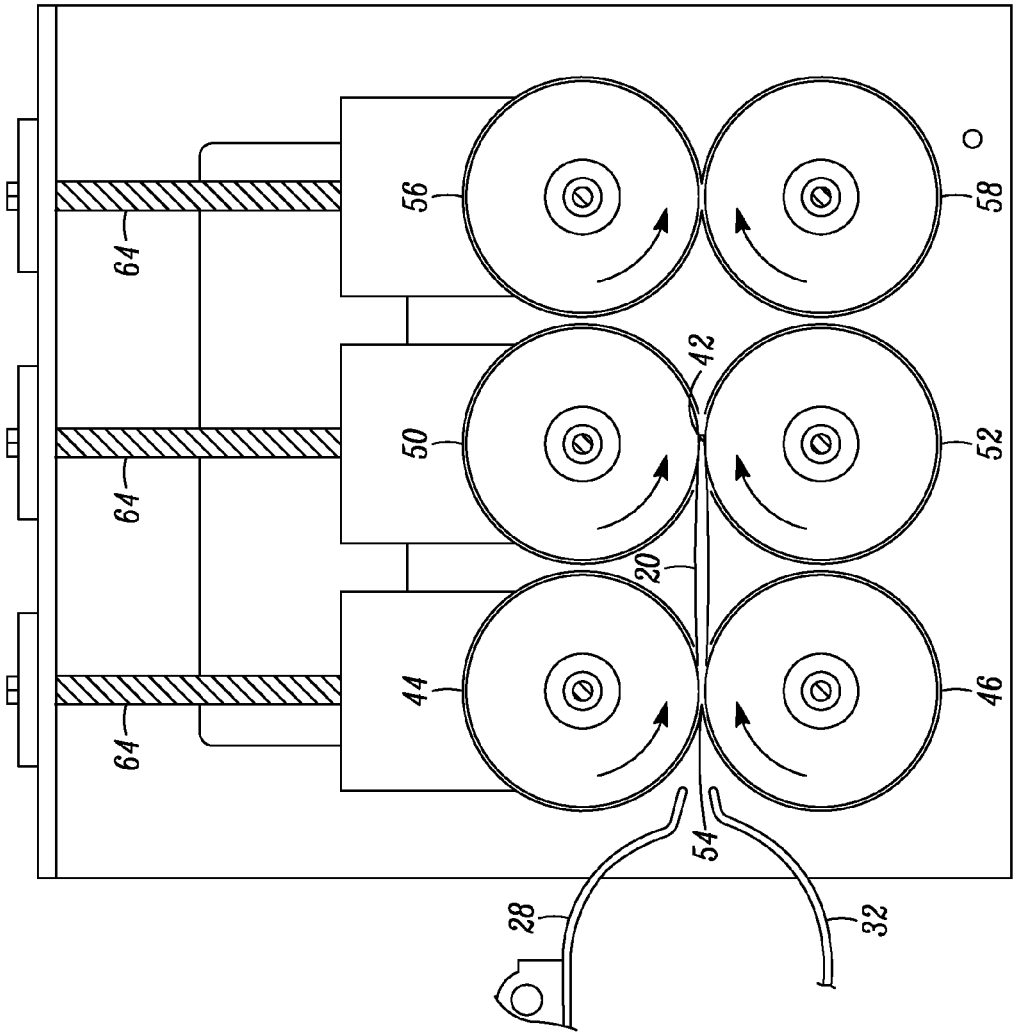

FIG. 7

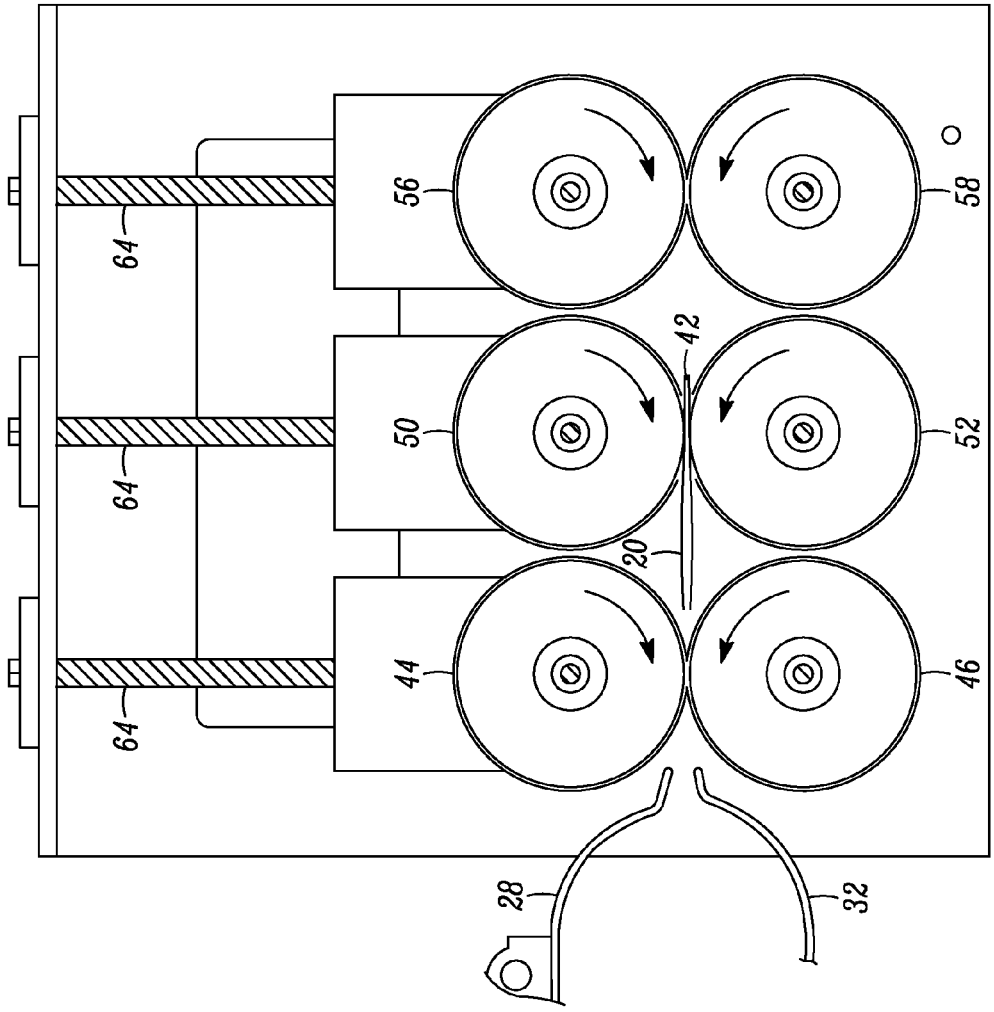

FIG. 8

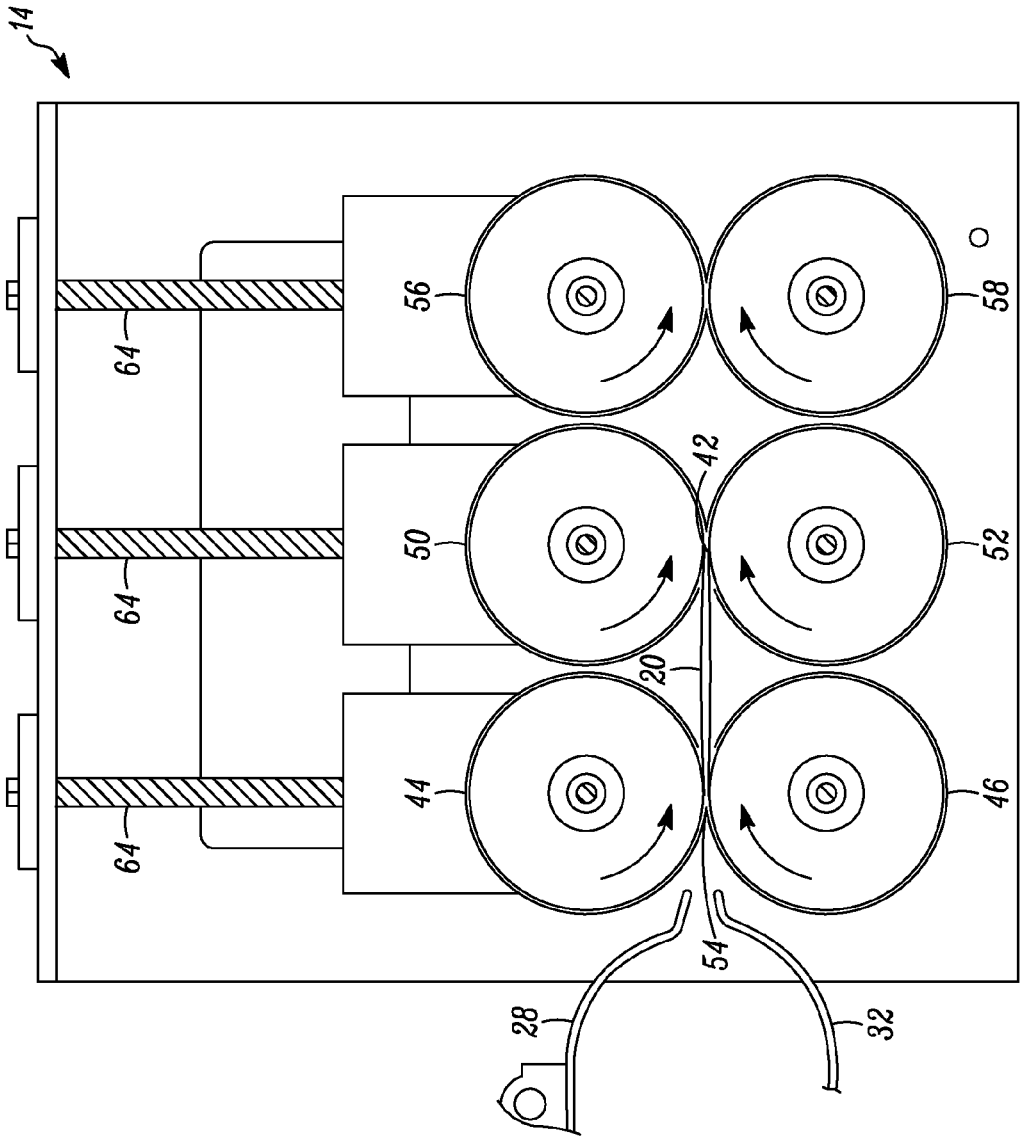

FIG. 9

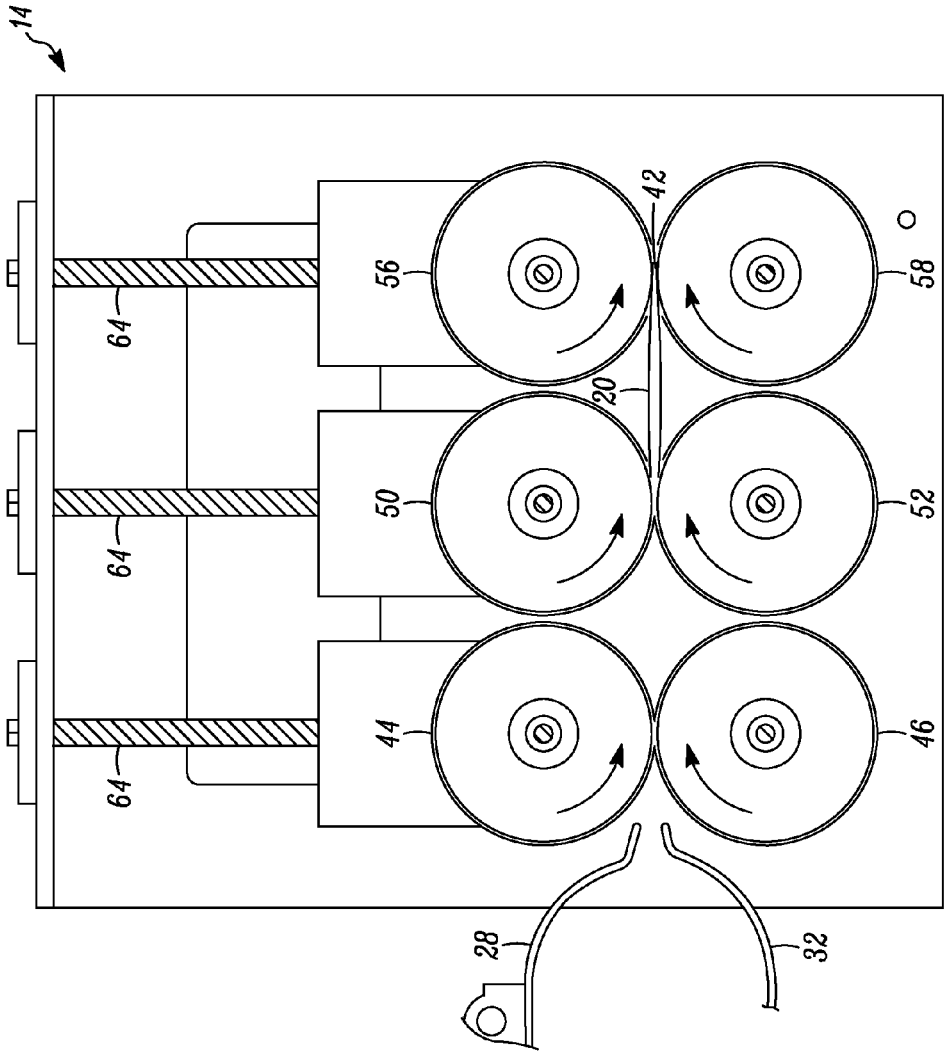

FIG. 10

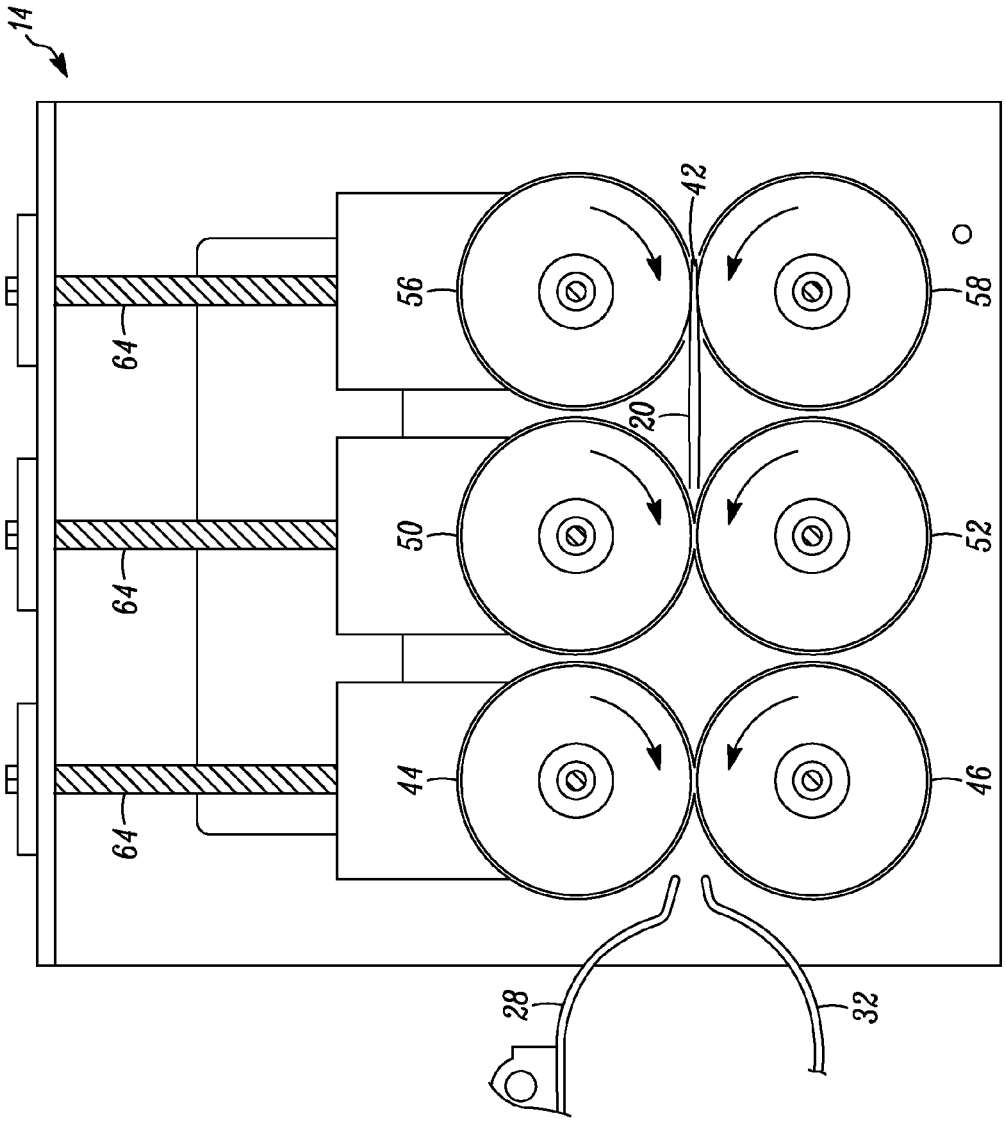

FIG. 11

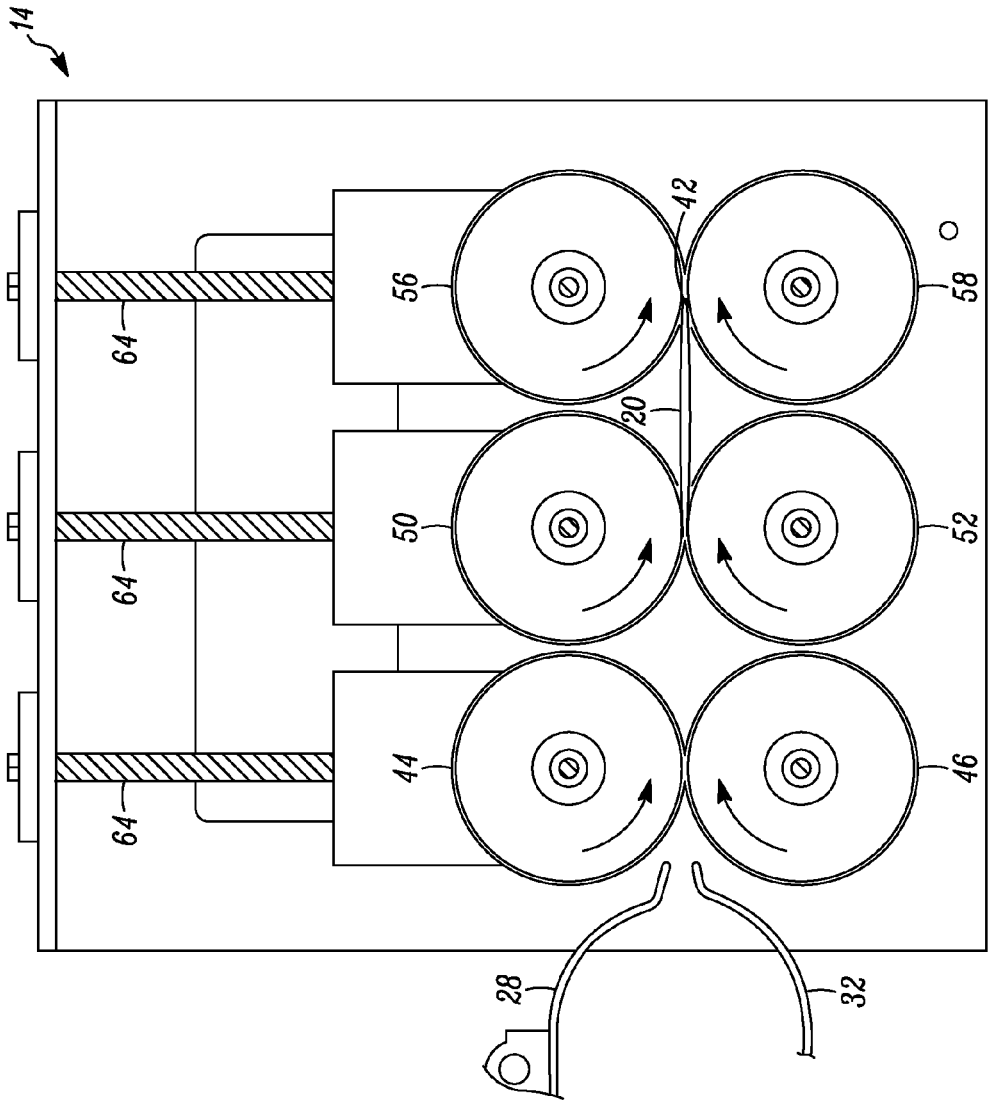

FIG. 12

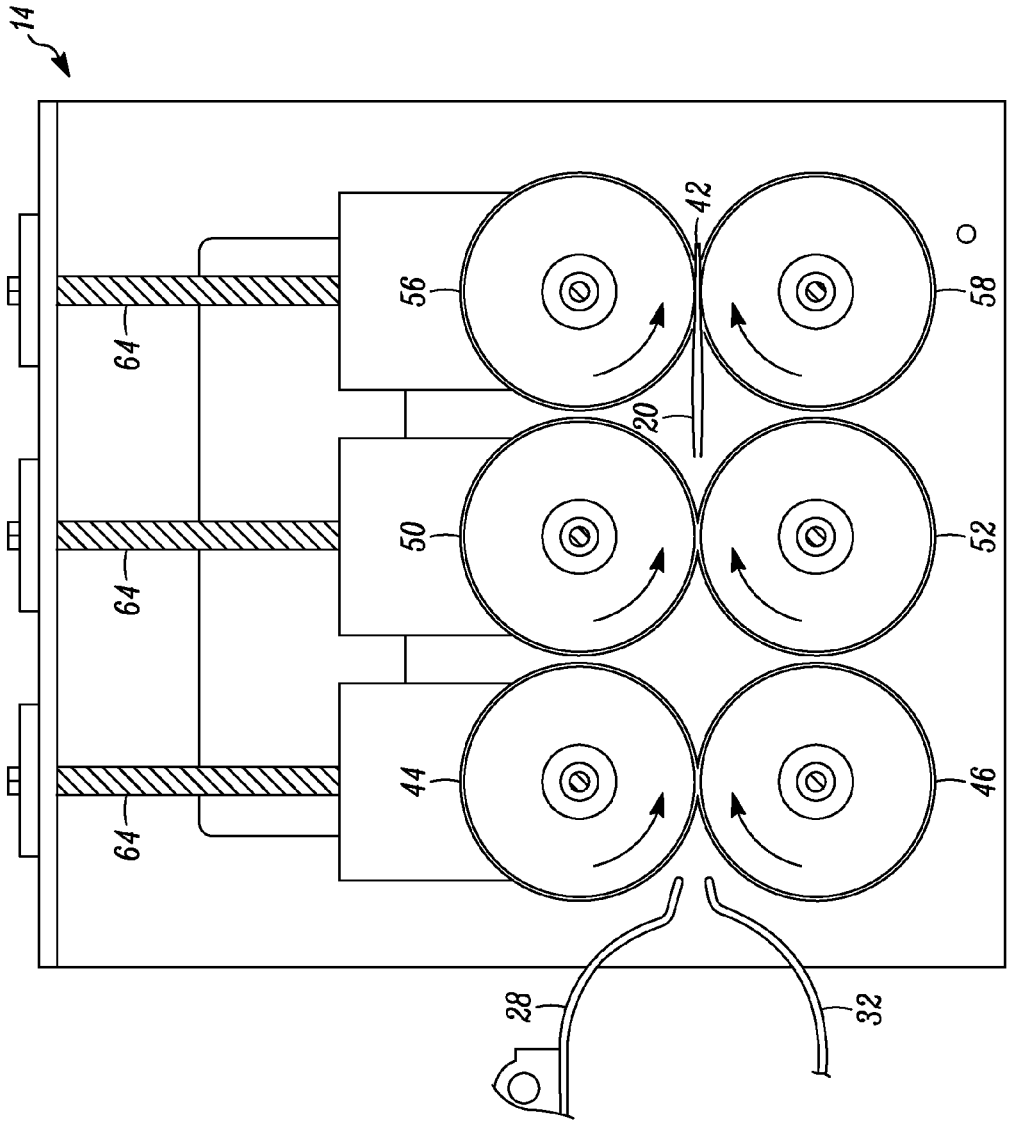

FIG. 13

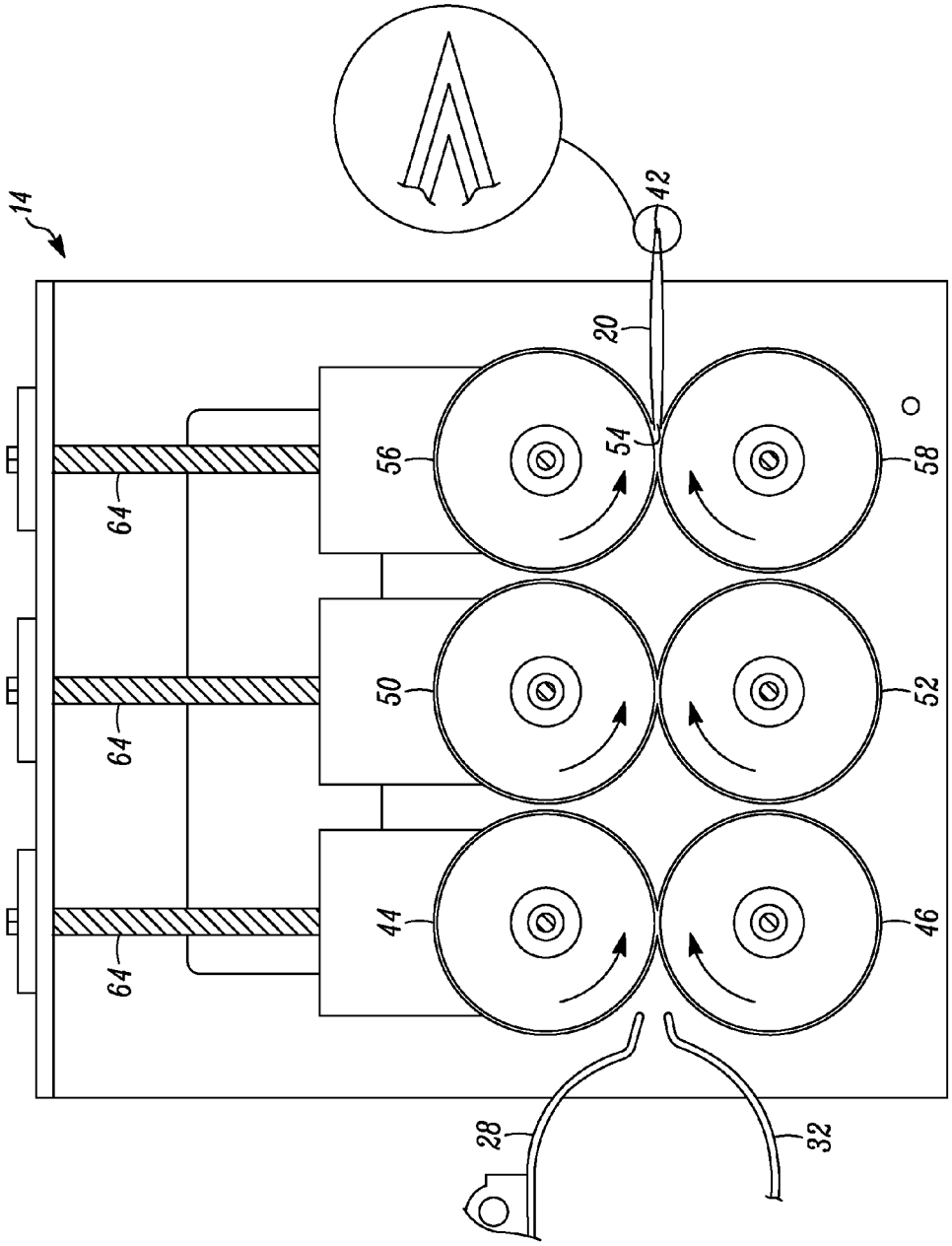

FIG. 14

SYSTEMS AND METHODS FOR FOLDING A STACK OF SUBSTRATE SHEETS

CROSS-REFERENCE TO RELATED APPLICATIONS

This application claims priority under 35 U.S.C. §119(e) to United States Provisional Patent Application entitled "SYSTEM AND METHOD FOR FOLDING SUBSTRATES", Ser. No. 61/422,683 filed on 14 Dec. 2010, the entire contents of the application is herein incorporated by reference.

FIELD

This application generally relates to a system and method for folding a stack of substrate sheets. More specifically, this application relates to a system and method for folding a stack of substrate sheets into a stable, space-efficient folded configuration for packing and shipping.

BACKGROUND

It is common to simply fold sheets of printed material, such as an invoice, and place it into a shipping container. However, as businesses seek to lower shipping costs, shipping containers become smaller and more tailored to the size and shape of the items being shipped. Furthermore, as products become more complicated and require more instructions, warnings, legal disclaimers, and the like, the number of pages for folding, before inclusion with items in the shipping container, increases. Simply folded paperwork may not fit into the shipping container without tearing or crumpling. Furthermore, simply folded paperwork may have the tendency to unfold by itself or spring back to approximately its original size.

BRIEF DESCRIPTION OF THE DRAWINGS

FIG. **1** is a partial side perspective view of an embodiment with some exterior structure removed for clear illustration of internal components;

FIG. **2** is a partial cross-sectional side view of an embodiment illustrating the substrate positioned in a tray;

FIG. **3** is a partial cross-sectional side view of an embodiment illustrating the substrate positioned within curved forms;

FIG. **4** is a partial cross-sectional side view of an embodiment illustrating a blade engaging the substrate;

FIG. **5** is a schematic diagram of an embodiment of a method for folding a stack of substrate sheets;

FIG. **6** is a schematic diagram of an embodiment of a method for folding a stack of substrate sheets;

FIG. **7** is a partial cross-sectional side view of an embodiment of a roller assembly with a stack of substrates between first and second sets of rollers rotating in a first direction;

FIG. **8** is a partial cross-sectional side view of an embodiment of the roller assembly with a stack of substrates between the first and second sets of rollers rotating in a second direction;

FIG. **9** is a partial cross-sectional side view of an embodiment of the roller assembly with a stack of substrates between the first and second sets of rollers rotating in the first direction;

FIG. **10** is a partial cross-sectional side view of an embodiment of the roller assembly with a stack of substrates between the second and third sets of rollers rotating in a first direction;

FIG. **11** is a partial cross-sectional side view of an embodiment of the roller assembly with a stack of substrates between the second and third sets of rollers rotating in a second direction;

FIG. **12** is a partial cross-sectional side view of an embodiment of the roller assembly with a stack of substrates between the second and third sets of rollers rotating in the first direction;

FIG. **13** is a partial cross-sectional side view of an embodiment of the roller assembly with a stack of substrates leaving the second set of rollers and passing through the third set of rollers; and

FIG. **14** is a partial cross-sectional side view of an embodiment of the roller assembly with an open end of a stack of substrates leaving the third set of rollers.

DETAILED DESCRIPTION

In general, systems and methods may include the use of multiple sets of opposing rollers driven by servo drives to efficiently and automatically fold sheets of the substrate material. By feeding the folded sheets through the sets of opposing rollers in one direction, and then back feeding the sheets in the opposite direction, a stepped crease having a staggered fold configuration is created. This process results in a fold with increased tightness and reduced tendency to unwind. The tighter fold may reduce the variability of the folded substrates in an automated handling process, leading to a higher degree of operational efficiency.

FIG. **1** is an illustration of a system **1**, according to an example embodiment. The system **1** and (and an associated method **500** as described in FIG. **5** below) continuously fold stacks of multiple sheets of substrates, such as paper, coated paper, printable polymers, or combinations thereof. The folded substrates may be used in a variety of different ways including for efficient packing in shipping containers. The system **1** and method **500** also effectively and automatically fold the stack of substrates into a stable space-efficient folded configuration. In some embodiments, the folded configuration is a staggered folded configuration such that the fold of each sheet in the stack does not rest exactly within or adjacent the enveloping folded sheet. Rather, the staggered folded configuration that is made by the system **1** and method **500** is a configuration of stepped creases similar to a chevron fold (e.g., Sergeant's stripes are positioned in a chevron fold) or multiple stacked chevron folds. Specifically, viewing the stack of substrate sheets in its staggered folded configuration at rest horizontally, the folded edges of the inner substrate sheets of the staggered folded configuration are slightly offset from a respective outer folded edge of the paper enveloping it.

The system **1** includes a transporting mechanism **10**, a positioning mechanism **12**, and a roller assembly **14**. The transporting mechanism **10** receives and transports a stack of substrate sheets **20**. In an example, the transporting mechanism **10** includes walls that define a receiving slot for the stack of substrate sheets **20** and may include mechanical and electrical components to transport the stack of substrate sheets **20**. The positioning mechanism **12** is configured to receive the stack of substrate sheets **20** and positions the stack of substrate sheets **20** for folding. The positioning mechanism **12** also drives a portion of the stack of substrate sheets **20** into the roller assembly **14** after the stack of substrate sheets **20** is positioned for folding. As shown in FIG. **1**, the transporting mechanism **10** includes a receiving tray **22** having one or more elongated slots **24** and vertical fingers **26**. As used herein, directional terms such as forward, rearward, above, downward, vertical, horizontal, below and transverse, as well

as any other similar directional terms, are for reference only unless explicitly recited in the claims and do not limit components of the system **1** to a specific angle. For example, vertical and horizontal need not be perpendicular to one another. Accordingly, these terms, as utilized to describe the system **1** and method **500** should be interpreted relative to the system **1** and method **500** as implemented in the normal operating position and as shown in the drawings for ease of explanation. In some embodiments, each of the vertical fingers **26** of the transporting mechanism **10** extends through one of the elongated slots **24**. The vertical fingers **26** are configured to push multiple sheets from the stack of substrate sheets **20** by pushing the edges of the multiple sheets as the vertical fingers **26** slide in the elongated slots **24**.

Referring to FIG. **2**, the stack of substrate sheets **20** is manually loaded or fed by a sheet feeder (not shown) into the receiving tray **22**. When a stack of the desired number of substrate sheets **20** to be folded together is accumulated in a horizontal feed position at the receiving tray **22**, the vertical fingers **26** transport the stack of substrate sheets **20** by sliding along the elongated slots **24**. The vertical fingers **26** are driven from end to end along the elongated slots **24** by a pneumatically-driven piston, electro-mechanical actuator or other similar mechanism. Other types of actuators may drive movement of the vertical fingers **26**.

Also as shown in FIG. **1**, the positioning mechanism **12** includes an upper curved form **28**, a lower curved form **32**, a stop **34**, a position sensor **36** and a clamping mechanism **38**. The lower curved form **32** is offset from the receiving tray **22** in a direction towards the roller assembly **14**. The upper curved form **28** and the lower curved form **32** are disposed between the transporting mechanism **10** and the roller assembly **14**. Specifically, the upper curved form **28** and the lower curved form **32** have a concave side facing the transporting mechanism **10** and a convex side facing the roller assembly **14**.

As shown in FIG. **3**, a leading edge **30** of the stack of substrate sheets **20** is advanced by the vertical fingers **26** of the transport mechanism **10** through the upper curved form **28**, where it is deflected so as to orient the leading edge **30** of the stack **20** in a downward direction. As the stack of substrate sheets **20** is further advanced by the vertical fingers **26**, the leading edge **30** contacts and is deflected by the lower curved form **32**. In some embodiments, the lower curved form **32** is offset relative to the upper form **28** in a direction towards the roller assembly **14** to ensure that the leading edge **30** of the stack **20** contacts an inside curve **33** of the lower curved form **32** to facilitate transitioning of the edge **30** from the upper curved form **28** to the lower curved form **32**. In an example embodiment, a free edge **29** of the upper curved form **28** is positioned closer to the vertical fingers **26** and receiving tray **22** than a free edge **31** of the lower form **32**. The free edges **29**, **31** of the upper curved form **28** and the lower curved form **32** are spaced from each other to form an elongated aperture **35** through which the stack of sheets can travel as will be described in greater detail herein. The free ends of the upper and lower curved forms include flanges that extend away from the receiving tray **22** and toward the roller assembly **14**. The aperture **35** acts as a gap that is sized to receive there through at least twice the height of the stack of substrate sheets **20** and the blade **40**. The stack of substrate sheets **20** is advanced by the vertical fingers **26** around the upper curved form **28**, past the opening, onto the lower curved form **32** until the leading edge **30** reaches an approximately horizontal orientation and contacts the stop **34** at a lower end portion of the lower curved form **32**.

Referring to FIG. **3**, the leading edge **30** activates the position sensor **36**. The position sensor **36** operates by detecting a presence of the leading edge **30** at the lower end portion of the lower curved form **32** with, for example, sonic or ultrasonic detection, pressure sensing, interruption of a light beam or physical proximity. The position sensor **36** is communicatively connected to the clamping mechanism **38**, which is positioned over the lower end portion of the lower curved form **32**. A signal from the position sensor **36** activates the clamping mechanism **38**. The clamping mechanism **38** is driven by a pneumatically-driven piston, electromechanical device, or similar instrumentality, for example. The clamping mechanism **38** secures the stack of substrate sheets **20** against an inside surface of the lower end portion of the lower curved form **32** so that the leading edge **30** is retained in position against the lower end portion of the lower curved form **32**.

As shown in FIG. **4**, once the stack of substrate sheets **20** is secured, a blunt folding blade **40** is activated by an actuator **41** (pneumatically-driven or electrically driven) and extends horizontally to contact and push a midpoint section **42** of the stack of substrate sheets **20** into the roller assembly **14**. The folding blade **40** is disposed between the tray **22** and the lower curved form **32** and is configured to slide between the upper and lower curved forms **28**, **32** and through the aperture. Any blunt, narrow object that is capable of sliding between the upper and lower curved forms **28**, **32** may be utilized to push the midpoint section **42** into the roller assembly **14**. The mid-point section **42** may be the center of the stack of substrate sheets **20** or may be offset from the center of the stack of substrate sheets **20** in some example embodiments.

Referring to FIG. **1**, the roller assembly **14** includes sets of opposing rollers **44**, **46**, **50**, **52**, **56**, **58** for receiving and then folding the stack of substrate sheets **20** as it moves through the sets of opposing rollers. In some embodiments, the sets of opposing rollers **44**, **46**, **50**, **52**, **56**, **58** are driven by a servo drive or drives (not shown) or other activation mechanisms to efficiently and automatically fold the stack of substrate sheets **20** by reversing direction of rotation. For example, the roller assembly **14** may include a first set of opposing rollers **44**, **46** rotatably disposed to receive the stack of substrate sheets **20** therebetween. The first set of opposing rollers **44**, **46** is positioned proximate the upper and lower curved forms **28**, **32**. The line of contact **45** between rollers **44**, **46** is aligned, e.g., co-planar and essentially horizontal, with the center of the aperture **35** between the upper and lower curved forms **28**, **32** and first receives the stack of substrate sheets **20** in the roller assembly **14**.

Referring to FIG. **5**, the method **500** according to an embodiment is illustrated. In block **502**, the method **500** includes positioning the stack of substrate sheets **20** for folding. Referring to FIGS. **2** and **3**, the transporting mechanism **10** moves the paper to the positioning mechanism **12** which positions the stack of substrate sheets **20** for folding. At block **504**, the method **500** further includes feeding the stack of substrate sheets into the first set of rollers **44**, **46**. The clamping mechanism **38** continues to hold momentarily the leading edge **30** while the folding blade **40** pushes the stack of substrate sheets **20** until taught. As shown in FIG. **4**, when the folding blade **40** reaches a point in horizontal travel such that the midpoint section **42** is impinged between the first set of opposing rollers **44** and **46** at the contact line therebetween, a signal from a position sensor **48** causes release of the clamping mechanism **38** and activates the servo drive mechanism for the first pair of rollers **44**, **46** to begin rotating. The position sensor **48** senses when the folding blade **40** has extended outwardly, The position sensor **48** detects the proximity of the folding blade **40** to the position sensor **48**. In an example

embodiment, the folding blade **40** may have a magnet disposed thereon. In this example embodiment, the position sensor **48** is configured to detect the proximity of the magnet and therefore the presence of the folding blade **40**. In an example embodiment, the position sensor is a Hall effect sensor. Additional position sensors (not shown) are disposed in the roller assembly **14** to determine a position of the stack of substrate sheets **20**. Signals from these position sensors and position sensor **48** are sent to a controller unit **49**. The controller unit is configured to direct the direction and speed of the servo drives for the sets of opposing rollers and other actuators for the clamping mechanism **38**, the folding blade **40**. In some embodiments, the controller unit **49** includes an Allen Bradley PLC (Programmable Logic Controller) operating ControlLogix software. The controller unit **49** may also include other circuitry and memory circuits. The controller unit **49** can also include a processor.

Upon the position sensor **48** signaling that the folding blade **40** has extended outwardly from an end of the transporting mechanism **10** into the roller assembly **14**, the folded midpoint section **42** is drawn into and through the first set of opposing rollers **44** and **46** by rotation in a first direction. The actuating mechanism for the folding blade **40** then retracts the folding blade **40** to its original, unextended position so as not to impede the folding of the stack of substrate sheets **20** between the first set of opposing rollers **44**, **46**.

At block **506**, the method **500** includes rolling the first set of rollers **44**, **46** in a first direction to receive the approximate folded midpoint section **42** of the stack of substrate sheets **20** from a first side to move the stack of substrate sheets **20** in the first direction and passing the stack of substrate sheets **20** to the second set of rollers **50**, **52**. Referring to block **508**, the second set of rollers **50**, **52** receives the approximate midpoint section **42** at a first side of the second set of rollers **50**, **52** from a second side of the first set of rollers **44**, **46**. As shown in FIG. **7**, the first set of opposing rollers **44**, **46** continue to rotate to move the stack of substrate sheets **20** in the first direction until the folded midpoint section **42** of the stack of substrate sheets **20** is inserted into the second set of opposing rollers **50** and **52**. The distance between the contact point between the first set of opposing rollers **44** and **46**, and the contact point between the second set of opposing rollers **50** and **52** is, in some embodiments, less than a desired folded length of the stack of substrate sheets **20**. Thus, during operation of the roller assembly **14**, in these embodiments, the folded stack of substrate sheets **20** will, in general, be secured between at least one set of opposing rollers **44**, **46**; **50**, **52**; or **56**, **58** during the folding process. The third pair of opposing rollers **56**, **58** will be described in greater detail with reference to FIG. **6** below.

The upper rollers **44**, **50** and **56** are part of an upper section of the roller assembly **14** and the lower rollers **46**, **52**, **58** are part of a lower section of the roller assembly **14**. The upper section and lower section of the roller assembly **14** each have a roller servo drive to rotate the rollers in a desired direction. A single servo drive may control both roller sections through proper gearing. Since each set of opposing rollers has a roller that rotates in a counterclockwise direction and a roller that rotates in a clockwise direction, as used herein, "first direction" will refer to the direction that the set of rollers rotate so as to push/roll the stack of substrate sheets **20** away from the transport mechanism **10** toward an exit of the roller assembly **14** and "second direction" will refer to the direction that the set of rollers (acting together/conjunctively) push/roll the stack of substrate sheets **20** towards the transport mechanism **10**.

At block **510**, the method **500** includes reversing from the first direction and rolling the first and second sets of rollers **44**, **46** and **50**, **52** in the second direction. Referring to FIG. **8**, once the folded midpoint section **42** of stack **20** passes through the second set of opposing rollers **50**, **52**, the roller servo drive reverses the direction of rotation to push the folded midpoint section **42** back through the contact point of the second set of opposing rollers **50**, **52**. At block **512**, the method **500** includes holding an open end **54** of the stack of substrate sheets **20** with the first set of rollers **44**, **46**. In an example embodiment, holding the open end **54** includes preventing the stack of substrate sheets **20** from passing completely past, e.g., from the first, receiving side, to the second, exit side, the respective set of rollers. However, the stack of substrate sheets **20** can still move in the rollers but cannot be released from the roller adjacent the open end **54** of the stack **20**. The passing of the folded midpoint section **42** back through the contact point of the second set of opposing rollers **50**, **52** applies pressure again to the folded midpoint section **42**, during which the open end **54** of the folded stack of substrate sheets **20** is impinged by the first set of opposing rollers **44**, **46**.

At block **514**, the method **500** includes reversing from the second direction of rotation and rolling the first and second sets of rollers **44**, **46** and **50**, **52** in the first direction to pass the stack of substrate sheets **20** to the second set of rollers **50**, **52**. That is, referring to FIG. **9**, the roller servo drive rotates the first and second sets of rollers **44**, **46** and **50**, **52** in the first direction so that the folded midpoint section **42** again passes through the second set of opposing rollers **50**, **52**

At block **516**, the method **500** includes receiving the open end **54** at a first side of the second set of rollers **50**, **52** and rolling the stack of substrate sheets **20** to a second side of the second set of rollers **50**, **52**. After exiting the second side (downstream) of the second set of rollers **50**, **52**, the stack of substrate sheets **20**, now folded, can be picked up for insertion into a shipping container or further transported for insertion into a shipping container. In a further example, the further transportation can be insertion into a second transporting mechanism **10** and roller mechanism **14** for a further folding operation as described herein.

Referring now to FIG. **6**, a method **600** in accordance with another embodiment of a method **600** for folding a stack of substrate sheets **20** will now be explained. In view of the similarity between the embodiments, the blocks of the method **600** that are identical to the blocks of the method **500** will be given the same reference numerals as the blocks of the method **500**. Moreover, a description of the blocks that are identical may be omitted for the sake of brevity.

The folded midpoint section **42** passes through the third set of rollers **56**, **58** after block **516**. That is, at block **618**, the method **600** includes receiving the approximate folded midpoint section **42** from a first side of the third set of rollers **56**, **58**, as shown in FIG. **10**.

At block **620**, the method **600** includes reversing from the first direction and rolling the second and third sets of rollers **50**, **52**, **56**, **58** in the second direction. Referring to FIG. **11**, once the folded midpoint section **42** passes through the third set of opposing rollers **56**, **58**, the roller servo drive reverses the direction of rotation until the folded midpoint section **42** passes back through the contact point of the third set of opposing rollers **56**, **58**. At block **622**, the method **600** includes holding the open end **54** of the stack of substrate sheets **20** with the second set of rollers **50**, **52**. The passing of the folded midpoint section **42** back through the contact point of the third set of rollers **56**, **58** applies pressure again to the folded midpoint section **42**, during which the open end **54** of

the folded stack of substrate sheets **20** is impinged by the second set of opposing rollers **50**, **52**.

FIG. **12** illustrates the position of the impinged open end **54** at the time of reversal in block **624**. At block **624**, the method **600** includes reversing from the second direction and rolling the second and third sets of rollers **50**, **52**, **56**, **58** in the first direction to pass the stack of substrate sheets **20** in the first direction. The roller servo drive rotates the second and third set of opposing rollers **50**, **52**, **56**, **58** in the first direction. At block **626**, the method **600** includes receiving the approximate folded midpoint section **42** with the third set of rollers **56**, **58** at a first side and passing the stack of substrate sheets **20** to a second side of the third set of rollers **56**, **58**. Referring to FIG. **13**, the folded midpoint section **42** of the stack of substrate sheets **20** again passes through the third set of opposing rollers **56** and **58**.

Referring to FIG. **14**, the open end **54** of the stack of substrate sheets **20** passes through the third set of opposing rollers **56**, **58** and the fully folded stack of substrate sheets **20** is expelled from the roller assembly **14**. The method **600** may be repeated after the stack of substrate sheets **20** are expelled from the roller assembly. In some embodiments, the feeding into the first set of rollers **44**, **46**, as described at block **504**, of a subsequent stack of substrate sheets **20** may begin at, for example, block **624**, e.g., when the second and third sets of rollers **50**, **52**, **56**, **58** are rolling in the first direction a second time.

The rotation and reversal of rotation described above staggers the stack of substrate sheets **20** to provide a staggered folded configuration and provides a more stable fold that prevents the stack **20** from springing back into its approximate original form after folding. In some embodiments, a system and method with sets of rollers in addition to the two or three sets may be utilized to fold of thicker stacks, for example. Thus, the number of sets of rollers can be two or greater and remain within the scope of the present disclosure. The multiple passes of the stack of substrate sheets **20** through the pairs of rollers **44**, **46**; **50**, **52**; and **56**, **58** in at least two directions provides a stable fold that has a reduced tendency to unfold by itself or spring back to its original position.

In some embodiments, the rollers **44**, **46**, **50**, **52**, **56**, **58** may have annular grooves **60** along an outer diameter and an o-ring **62** as a contact ring seated within each of the annular grooves to give traction to the rollers. The o-rings **62** are sized and configured to snugly fit in the grooves **60** and grasp the stack of substrate sheets **20**. The roller assembly **14** can also include springs **64** that apply a downward force onto axels of the rollers. The springs **64** press the rollers **44**, **50**, **56** against the corresponding opposing rollers **46**, **52**, **58**. As stacks of substrate sheets **20** of varying thickness, containing various numbers of sheets, pass through the roller assembly **14**, the springs **64** adjust the force on the rollers so that each stack **20** receives a tailored force based on the number of sheets to provide an optimum fold. In an example embodiment, the springs **64** exert an essentially constant force on the rollers **44**, **50**, **56** but allow the rollers **44**, **50**, **56** to travel away from the opposing rollers **46**, **52**, **58** to allow different thicknesses of stacks **20** to travel between the sets of rollers **44**, **46**; **50**, **52**; and **56**, **58**.

The second set of opposing rollers **50**, **52** is juxtaposed next to the first pair of opposing rollers **44**, **46**. The sets of rollers **44**, **46**; **50**, **52**; and **56**, **58** are positioned in the direction of travel of the folded stack **20** such that at any one time during travel of the stack at least one pair of rollers **44**, **46**; **50**, **52**; and **56**, **58** grip the stack of substrate sheets **20** therebetween. In an example embodiment, the rollers are cylinders with their axels being spaced apart less than the length (in the direction of travel) of the folded stack of substrate sheets **20**. In a further example embodiment, the radius of each roller pairs **44**, **46**; **50**, **52**; and **56**, **58** is less than half the length of the folded stack of substrate sheets **20**. This allows the roller pairs **44**, **46**; **50**, **52**; and **56**, **58** to be spaced from each other and have at least one roller pair **44**, **46**; **50**, **52**; or **56**, **58** to engage the folded stack of substrate sheets **20**.

In some embodiments, the method includes positioning the stack of substrate sheets for folding; feeding the stack of substrate sheets into a first set of rollers by driving an approximate midpoint section of the stack toward a contact point of the first set of rollers; rolling the rollers in a first direction to receive the approximate midpoint section of the stack of substrate sheets from a first side and passing the stack of substrate sheets to a second set of rollers to fold at the approximate midpoint section; receiving the folded approximate midpoint section of the stack of substrate sheets from the first side with the second set of rollers; reversing from the first direction and rolling the first and second sets of rollers in a second direction; holding an open end of the stack of substrate sheets with the first set of rollers at the second side of the first set of rollers; reversing from the second direction and rolling the first and second sets of rollers in the first direction; and receiving the folded approximate midpoint section at contact point of the second set of rollers and passing the stack of substrate sheets to a second side of the second set of rollers.

In some embodiments, the system includes a roller assembly and a positioning mechanism. The roller assembly is configured for folding the stack of substrate sheets and the positioning mechanism is configured to position the substrate for entry into the roller assembly. The positioning mechanism includes an upper curved form and a lower curved form to guide the stack of substrate sheets into a curved position for folding. The positioning mechanism further includes a folding blade positioned to extend through an elongated aperture between the upper and lower curved forms.

GENERAL INTERPRETATION OF TERMS

In understanding the scope of embodiments of the present invention, the term "comprising" and its derivatives, as used herein, are intended to be open ended terms that specify the presence of the stated features, elements, components, groups, and/or steps, but do not exclude the presence of other unstated features, elements, components, groups, and/or steps. The foregoing also applies to words having similar meanings such as the terms, "including", "having" and their derivatives. Also, the terms "part," "section," "portion," "member" or "element" when used in the singular can have the dual meaning of a single part or a plurality of parts. As used herein to describe embodiments of the present invention, the following directional terms "forward, rearward, above, downward, vertical, horizontal, below and transverse" as well as any other similar directional terms refer to those directions of the system **1** and method **500**, **600** in a normal operating position. As used herein, "a" or "an" may reflect a single part or multiple parts. Finally, terms of degree such as "substantially", "about" and "approximately" as used herein mean a reasonable amount of deviation of the modified term such that the end result is not significantly changed. For example, these terms can be construed as including a deviation of at least ±5% of the modified term if this deviation would not negate the meaning of the word it modifies. Other ranges of deviation may be within the scope of the embodiments of the present invention. For example, a reasonable amount of deviation may be that which produces the Chevron type folded stack as described herein. That is, a 1-10% deviation from the mid-

point **42** of the stack of substrate sheets **20** is within the scope of the embodiments of the present invention.

While only selected embodiments have been chosen to illustrate the present invention, it will be apparent to those skilled in the art from this disclosure that various changes and modifications can be made herein without departing from the scope of the invention as defined in the appended claims. Furthermore, the foregoing descriptions of the embodiments according to the present invention are provided for illustration only, and not for the purpose of limiting the invention as defined by the appended claims and their equivalents.

What is claimed is:

1. A method for folding a stack of substrate sheets comprising:

positioning a stack of non-continuous substrate sheets for folding from an aperture in a curved form;

feeding the stack of substrate sheets into a first set of rollers by driving an approximate midpoint section of the stack toward a contact point of the first set of rollers;

rolling the first set of rollers to receive the approximate midpoint section of the stack of substrate sheets from the feeding at a first side of the first set of rollers and passing the stack of substrate sheets to a second set of rollers in a first direction to fold the stack of substrate sheets at the approximate midpoint section to form a closed end of the folded stack of substrate sheets and an open end of the folded stack of substrate sheets;

receiving the folded approximate midpoint section of the stack of substrate sheets from rolling the first set of rollers at a first side of the second set of rollers with the second set of rollers;

reversing from the first direction and rolling the first and second sets of rollers to cause the stack of substrate sheets to travel in a second direction such that the open end of the stack of substrate sheets is received at a second side of the first set of rollers;

stopping the first set of rollers to hold the open end of the stack of substrate sheets with the first set of rollers after receiving the stack of substrate sheets at the second side of the first set of rollers;

reversing from the second direction and rolling the first and second sets of rollers to cause the stack of substrate sheets to travel again in the first direction; and

after reversing from the second direction, again receiving the folded approximate midpoint section at a contact point of the second set of rollers and passing the stack of substrate sheets to a second side of the second set of rollers.

2. The method of claim **1**, wherein the feeding includes sliding a folding blade to push the approximate midpoint section to begin folding of the stack of substrate sheets.

3. The method of claim **1**, further comprising:

receiving the folded approximate midpoint section with a third set of opposing rollers from the second set of opposing rollers.

4. The method of claim **3**, further comprising:

rotating the second and third set of rollers to draw the folded approximate midpoint section of the stack of substrate sheets through the third set of rollers.

5. The method of claim **4**, further comprising:

reversing from the first direction of travel of the stack of substrate sheets and rolling the second and third sets of rollers to cause the stack of substrate sheets to travel in the second direction to draw at least the folded approximate midpoint of the stack of substrate sheets through the third set of rollers.

6. The method of claim **5**, further comprising:

holding the open end of the stack of substrate sheets with the second set of rollers.

7. The method of claim **6**, further comprising:

reversing from the second direction and rolling the second and third sets of rollers to pass the stack of substrate sheets in the first direction.

8. The method of claim **7**, further comprising:

receiving the approximate folded midpoint section with the third set of rollers at a first side of the third set of rollers and passing the stack of substrate sheets to a second side of the third set of rollers.

9. The method of claim **1**, wherein the positioning the stack of substrate sheets for folding includes positioning the stack along a concave surface of a pair of curved forms, temporarily securing the stack of substrate sheets to a portion of the concave surface of the pair of curved forms, and releasing the stack when the approximate midpoint section is between the first set of rollers.

10. A system for folding substrate sheets comprising:

a roller assembly configured to fold a stack of substrate sheets, the roller assembly including a first set of opposing rollers and a second set of opposing rollers juxtaposed with the first set of opposing rollers, the first and second sets of opposing rollers being configured and arranged to rotate to draw at least a portion of the stack of substrate sheets through the first and second sets of opposing rollers, the roller assembly further including a third set of opposing rollers downstream from the second set of opposing rollers; and

a positioning mechanism configured to position the stack of substrate sheets for entry into the roller assembly, the positioning mechanism including an upper curved form and a lower curved form to guide the stack of substrate sheets into a curved position for folding, the upper and lower curved forms forming an elongated aperture therebetween, the positioning mechanism further including a folding blade slidably positioned to extend through the elongated aperture between the upper and lower curved forms to push the stack of substrate sheets in the curved position toward the roller assembly,

wherein the upper curved form includes a first flange adjacent the aperture and extending downwardly and toward the roller assembly,

wherein the lower curved form includes a second flange adjacent the aperture and extending upwardly and toward the roller assembly,

wherein a controller is programmed to rotate the second and third sets of rollers to draw at least the folded portion of the stack through the second and third sets of opposing rollers, and

wherein the second and third sets of opposing rollers are configured and arranged to reverse direction of rotation to draw at least the folded portion of the stack of substrate sheets back through the third set of opposing rollers, and thereafter to reverse the direction of rotation to drive the folded portion of the stack between the third set of opposing rollers.

11. The system of claim **10**, wherein the folding blade is configured and arranged to push at least a portion of the stack of substrate sheets through the elongated aperture.

12. The system of claim **10**, wherein the upper curved form has a first concave side facing away from the roller assembly and configured for deflecting the stack while guiding the stack into the curved position for folding with the stack being in contact with the first concave side,

wherein the lower curved form has a second concave side facing away from the roller assembly and configured for deflecting the stack of substrate sheets while guiding the stack of substrate sheets into the curved position for folding with the stack of substrate sheets being in contact with the second concave side, and

wherein the second flange extends away from the second concave side in a direction of travel of the stack of substrate sheets through the aperture.

13. The system of claim **10**, wherein the first and second set of opposing rollers are configured to:

receive the stack of substrate sheets into the first set of rollers by sending an approximate midpoint section of the stack of substrate sheets toward a contact point of the first set of rollers;

roll the first set of rollers to receive the approximate midpoint section of the stack of substrate sheets from the feeding at a first side of the first set of rollers;

pass the stack of substrate sheets from the first set of rollers to the second set of rollers in a first direction to fold the stack of substrate sheets at the approximate midpoint section to form a closed end of the folded stack of substrate sheets and an open end of the folded stack of substrate sheets;

receive the folded approximate midpoint section of the folded stack of substrate sheets from rolling the first set of rollers at a first side of the second set of rollers with the second set of rollers;

reverse from the first direction and roll the first and second sets of rollers to cause the folded stack of substrate sheets to travel in a second direction such that the open end of the folded stack of substrate sheets is received at a second side of the first set of rollers;

stop the first set of rollers to hold the open end of the folded stack of substrate sheets with the first set of rollers after receiving the folded stack of substrate sheets at the second side of the first set of rollers;

reverse from the second direction and roll the first and second sets of rollers to cause the folded stack of substrate sheets to travel again in the first direction; and

after reversing from the second direction, receive again the folded approximate midpoint section at a contact point of the second set of rollers and pass the folded stack of substrate sheets to a second side of the second set of rollers.

14. The system of claim **10**, wherein the first flange extends downwardly toward the aperture to narrow the aperture in a travel direction of the stack of substrate sheets through the aperture and the second flange extends upwardly toward the aperture to narrow the aperture in the travel direction of the stack of substrate sheets through the aperture.

15. The system of claim **10**, wherein the stack of substrate sheets is a stack of printed papers.

16. A system for folding substrate sheets comprising:

a roller assembly configured to fold a stack of substrate sheets; and

a positioning mechanism configured to position the substrate for entry into the roller assembly, the positioning mechanism including an upper curved form and a lower curved form to guide the stack of substrate sheets into a curved position for folding, the upper and lower curved forms forming an elongated aperture therebetween, the positioning mechanism further including a folding blade slidably positioned to extend through the elongated aperture between the upper and lower curved forms to push the stack of substrate sheets in the curved position toward the roller assembly and a clamping mechanism proximate one of the upper and lower curved forms to secure the stack of substrate sheets to a portion of a concave surface of the upper and lower curved forms,

wherein the upper curved form includes a first flange adjacent the aperture and extending downwardly and toward the roller assembly, and wherein the lower curved form includes a second flange adjacent the aperture and extending upwardly and toward the roller assembly,

wherein the clamping mechanism is configured to release the stack of substrate sheets after the folding blade extends through the elongated aperture.

17. The system of claim **16**, wherein the roller assembly includes a first set of opposing rollers and a second set of opposing rollers juxtaposed with the first set of opposing rollers, the first and second sets of opposing rollers being configured and arranged to rotate to draw at least a portion of the stack of substrate sheets through the first and second sets of opposing rollers, the roller assembly further including a third set of opposing rollers downstream from the second set of opposing rollers, the first set of opposing rollers includes two rollers that always rotate in opposite directions when moving the stack of substrate sheets,

wherein the second set of opposing rollers includes two rollers that always rotate in opposite directions when moving the stack of substrate sheets,

wherein the second and third sets of rollers are configured and arranged to reverse direction of rotation to draw at least the folded portion of the stack back through the third set of rollers, and thereafter to reverse the direction of rotation to drive the folded portion of the stack between the third set of opposing rollers, and

wherein a controller is programmed to control rotation of the first, second, and third sets of rollers.

18. A method for folding a stack of substrate sheets comprising:

feeding a stack of substrate sheets into a form;

pressing the stack of substrate sheets through a gap in the form to form a folded end of the stack;

receiving the stack of substrate sheets between a first set of opposing rollers with the folded end being initially received by the first set of opposing rollers;

moving the folded end of the stack of substrate sheets in a first direction between the first set of opposing rollers from a receive side to an exit side;

receiving the folded end of the stack of substrate sheets between a second set of opposing rollers from a receive side;

moving the stack of substrate sheets in the first direction so that the folded end moves past the second set of opposing rollers with at least a part of the stack of substrate sheets remaining in the first set of opposing rollers;

after moving the stack of substrate sheets, stopping the first and second set of opposing rollers with the folded end being downstream and free of the second set of opposing rollers;

reversing direction of the stack of substrate sheets to a second direction by reversing rotation of the first and second set of opposing rollers so that the folded end moves past the receive side of the second set of opposing rollers with at least a part of the stack of substrate sheets remaining in the first set of opposing rollers;

moving the stack of substrate sheets in the first direction so that the folded end moves past the second set of opposing rollers; and

further moving the stack of substrate sheets in the first direction so that the free end moves past the first set of opposing rollers.

19. The method of claim **18**, wherein the first set of opposing rollers includes two rollers that always rotate in opposite directions when moving the stack of substrate sheets and wherein the second set of opposing rollers includes two rollers that always rotate in opposite directions when moving the stack of substrate sheets.

20. A method for folding a stack of substrate sheets comprising:

positioning a stack of non-continuous substrate sheets for folding from an aperture in a curved form;

feeding the stack of substrate sheets into a first set of rollers by driving an approximate midpoint section of the stack toward a contact point of the first set of rollers;

driving the first set of rollers to receive the approximate midpoint section of the stack of substrate sheets from the feeding at a first side of the first set of rollers and passing the stack of substrate sheets to a second set of rollers in a horizontal, first direction to fold the stack of substrate sheets at the approximate midpoint section to form a closed end of the folded stack of substrate sheets and an open end of the folded stack of substrate sheets;

receiving the folded approximate midpoint section of the stack of substrate sheets from rolling the first set of rollers at a first side of the second set of rollers;

driving the first and second sets of rollers to reverse the stack of substrate sheets from the first direction to travel in a horizontal, second direction such that the open end of the stack of substrate sheets is received at a second side of the first set of rollers and the folded approximate midpoint section passing from the second set of rollers;

driving the first and second sets of rollers to reverse the stack of substrate sheets from the second direction to the first direction with the first set of rollers having the stack of substrate sheets therebetween to cause the stack of substrate sheets to travel again in the first direction; and

after the first and second sets of rollers reverse the stack of substrate sheets from the second direction to the first direction, again receiving the folded approximate midpoint section at a contact point of the second set of rollers and passing the stack of substrate sheets to a second side of the second set of rollers.

21. The method of claim **20**, wherein the driving the first and second sets of rollers to reverse the stack of substrate sheets from the first direction to travel in a second direction includes receiving the stack of substrate sheets at the second side of the first set of rollers before driving to cause the stack of substrate sheets to travel again in the first direction.

* * * * *