US009270520B2

(12) **United States Patent**
Dina et al.

(10) **Patent No.: US 9,270,520 B2**
(45) **Date of Patent: *Feb. 23, 2016**

(54) **WIRELESS COMMUNICATION NETWORK SENSOR INFORMATION FOR CONTROL OF INDUSTRIAL EQUIPMENT IN HARSH ENVIRONMENTS**

(71) Applicant: **Illinois Tool Works Inc.**, Glenview, IL (US)

(72) Inventors: **Daniel Dina**, North Barrington, IL (US); **Kathy Lee Downie**, Spring Grove, IL (US)

(73) Assignee: **ILLINOIS TOOL WORKS INC.**, Glenview, IL (US)

(*) Notice: Subject to any disclaimer, the term of this patent is extended or adjusted under 35 U.S.C. 154(b) by 274 days.

This patent is subject to a terminal disclaimer.

(21) Appl. No.: **13/795,970**

(22) Filed: **Mar. 12, 2013**

(65) **Prior Publication Data**

US 2014/0052832 A1 Feb. 20, 2014

Related U.S. Application Data

(60) Provisional application No. 61/684,556, filed on Aug. 17, 2012.

(51) **Int. Cl.**

G06F 15/177	(2006.01)
H04L 12/24	(2006.01)
B23K 9/10	(2006.01)

(52) **U.S. Cl.**

CPC ***H04L 41/00*** (2013.01); ***B23K 9/1087*** (2013.01)

(58) **Field of Classification Search**

CPC .. B23K 9/1087; H04L 12/6418; H04L 67/12; H04W 4/008

See application file for complete search history.

(56) **References Cited**

U.S. PATENT DOCUMENTS

4,216,367	A	8/1980	Risberg
5,499,178	A	3/1996	Mohan
5,808,885	A	9/1998	Dew
6,016,528	A	1/2000	Jaramillo

(Continued)

FOREIGN PATENT DOCUMENTS

CN	2353480	12/1999
CN	2384730	6/2000

(Continued)

OTHER PUBLICATIONS

International Search Report for PCT application No. PCT/US2013/055002 dated Mar. 5, 2014, 14 pgs.

(Continued)

Primary Examiner — Tauqir Hussain

(74) *Attorney, Agent, or Firm* — Fletcher Yoder P.C.

(57) **ABSTRACT**

In certain embodiments, a system includes a master node device. The master node device includes communication circuitry configured to facilitate communication with a welding power supply unit via a long-range communication link, and to facilitate wireless communication with one or more welding-related devices via a short-range wireless communication network. The master node device also includes control circuitry configured to receive sensor data from one or more sensors within a physical vicinity of the short-range wireless communication network, and to route the sensor data to final destinations for the one or more sensors.

25 Claims, 8 Drawing Sheets

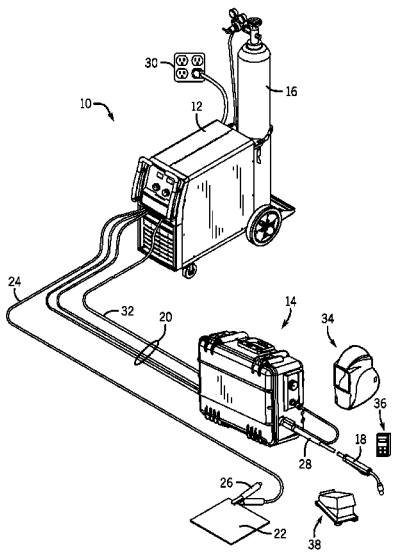

(56) **References Cited**

U.S. PATENT DOCUMENTS

6,087,622	A	7/2000	Summers	
6,417,995	B1	7/2002	Wu et al.	
6,583,386	B1	6/2003	Ivkovich	
6,624,388	B1	9/2003	Blankenship	
6,636,776	B1	10/2003	Barton	
6,734,393	B1	5/2004	Friedl et al.	
6,867,386	B1	3/2005	Niwa	
7,038,167	B2	5/2006	Hayes	
7,045,742	B2 *	5/2006	Feichtinger et al.	219/132
7,245,875	B2	7/2007	Clark et al.	
7,307,241	B2	12/2007	Hayes	
7,342,210	B2	3/2008	Fergason	
7,363,137	B2	4/2008	Brant et al.	
7,375,304	B2	5/2008	Kainec et al.	
7,574,172	B2	8/2009	Clark et al.	
7,643,890	B1 *	1/2010	Hillen et al.	700/17
7,810,937	B2	10/2010	Garbergs et al.	
7,873,495	B2	1/2011	Lindell	
7,979,162	B2	7/2011	Niemela et al.	
7,996,276	B2	8/2011	Blankenship	
8,239,532	B1	8/2012	Roskind	
8,471,525	B2	6/2013	Kim	
8,569,646	B2	10/2013	Daniel	
8,688,815	B2	4/2014	Chantry	
8,747,116	B2	6/2014	Zboray	
8,785,817	B2	7/2014	Luck	
8,851,896	B2	10/2014	Wallace	
2003/0062351	A1	4/2003	Davidson	
2003/0177228	A1	9/2003	Vigouroux	
2004/0026392	A1	2/2004	Feichtinger	
2004/0162630	A1	8/2004	Hillen	
2005/0152294	A1	7/2005	Yu	
2006/0187842	A1	8/2006	French	
2007/0080149	A1	4/2007	Albrecht et al.	
2007/0080150	A1	4/2007	Albrecht et al.	
2007/0080151	A1	4/2007	Albrecht et al.	
2007/0080152	A1	4/2007	Albrecht et al.	
2007/0080153	A1	4/2007	Albrecht et al.	
2008/0055154	A1	3/2008	Martucci	
2008/0061049	A1	3/2008	Albrecht	
2008/0116185	A1	5/2008	Luck et al.	
2008/0116186	A1	5/2008	Luck et al.	
2008/0149611	A1	6/2008	Roth et al.	
2009/0089300	A1	4/2009	Vicente	
2009/0200283	A1	8/2009	Bland et al.	
2009/0272221	A1	11/2009	Long et al.	
2009/0272222	A1	11/2009	Long et al.	
2010/0176106	A1 *	7/2010	Christensen et al.	219/137 R
2011/0133995	A1	6/2011	Pascolini	
2011/0180517	A1	7/2011	Schneider	
2011/0248008	A1	10/2011	Long et al.	
2012/0012561	A1	1/2012	Wiryadinata	
2013/0092672	A1	4/2013	Peters	
2013/0112673	A1	5/2013	Petrilla	
2013/0116849	A1	5/2013	Kooken	

FOREIGN PATENT DOCUMENTS

CN	1841437	10/2006
CN	101378877	3/2009
DE	202006009014	8/2006
EP	1112800	7/2001
EP	1681122	7/2006
EP	1833197	9/2007
JP	H10143226	5/1998
WO	0112376	2/2001
WO	02085566	10/2002
WO	2005084867	9/2005
WO	2011094138	8/2011

OTHER PUBLICATIONS

International Search Report for PCT application No. PCT/US2013/055005 dated Mar. 5, 2014, 15 pgs.

International Search Report for PCT application No. PCT/US2013/055006 dated Mar. 5, 2014, 16 pgs.

International Search Report for PCT application No. PCT/US2013/055007 dated Mar. 5, 2014, 17 pgs.

International Search Report for PCT application No. PCT/US2013/055008 dated Mar. 6, 2014, 15 pgs.

Jelicic, Vana, "Power Management in Wireless Sensor Networks with High-Consuming Sensors," Qualifying Doctoral Examination, University of Zagreb, Apr. 2011, http://www.fer.unizg.hr/_download/repository/VJelicic,KDI.pdf.

Lynch, Jerome P., Kenneth J. Loh, "A Summary Review of Wireless Sensors and Sensor Networks for Structural Health Monitoring," The Shock and Vibration Digest, vol. 38, No. 2, Mar. 1, 2006, pp. 91-128.

Macii, David et al., "Power Consumpton Reduction in Wireless Sensor Networks through Optimal Syncronization," 2009 IEEE Instrumentation and Measurement Technology Conference (I2MTC), May 5-7, 2009, Singapore, IEE, Piscataway, NJ, USA, May 5, 20096, pp. 1346-1351.

"WIT Wireless Sensors: Low Cost, Reliable and Ready to Use," Monnit Corporation, Jun. 2011.

"Should You Build or Buy Wireless Sensors?," Monnit Corporation, Mar. 2011.

"Monnit Wireless Sensors and iMonnit Online Monitoring System User Guide," Monnit Corporation, Oct. 2011.

* cited by examiner

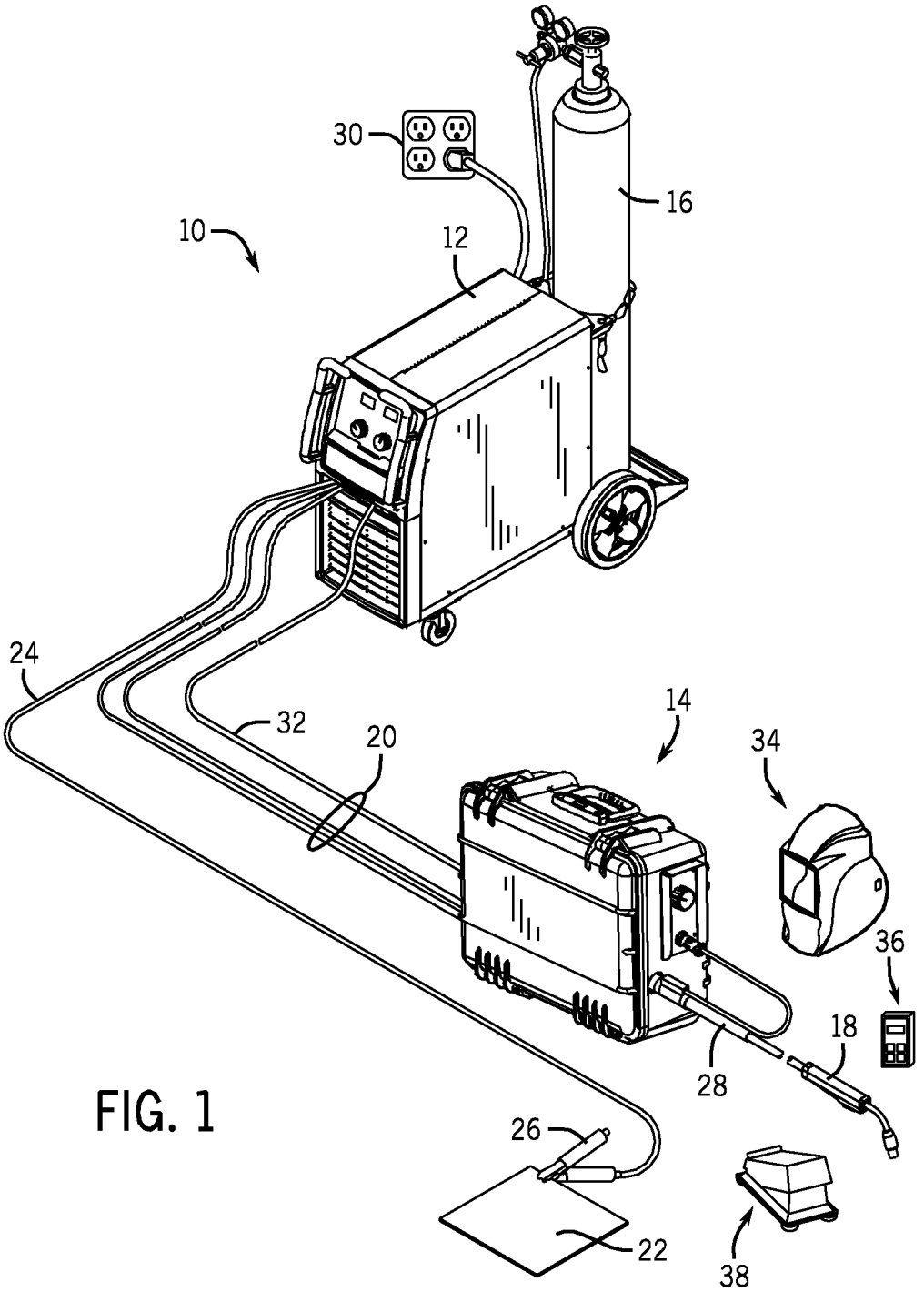

FIG. 1

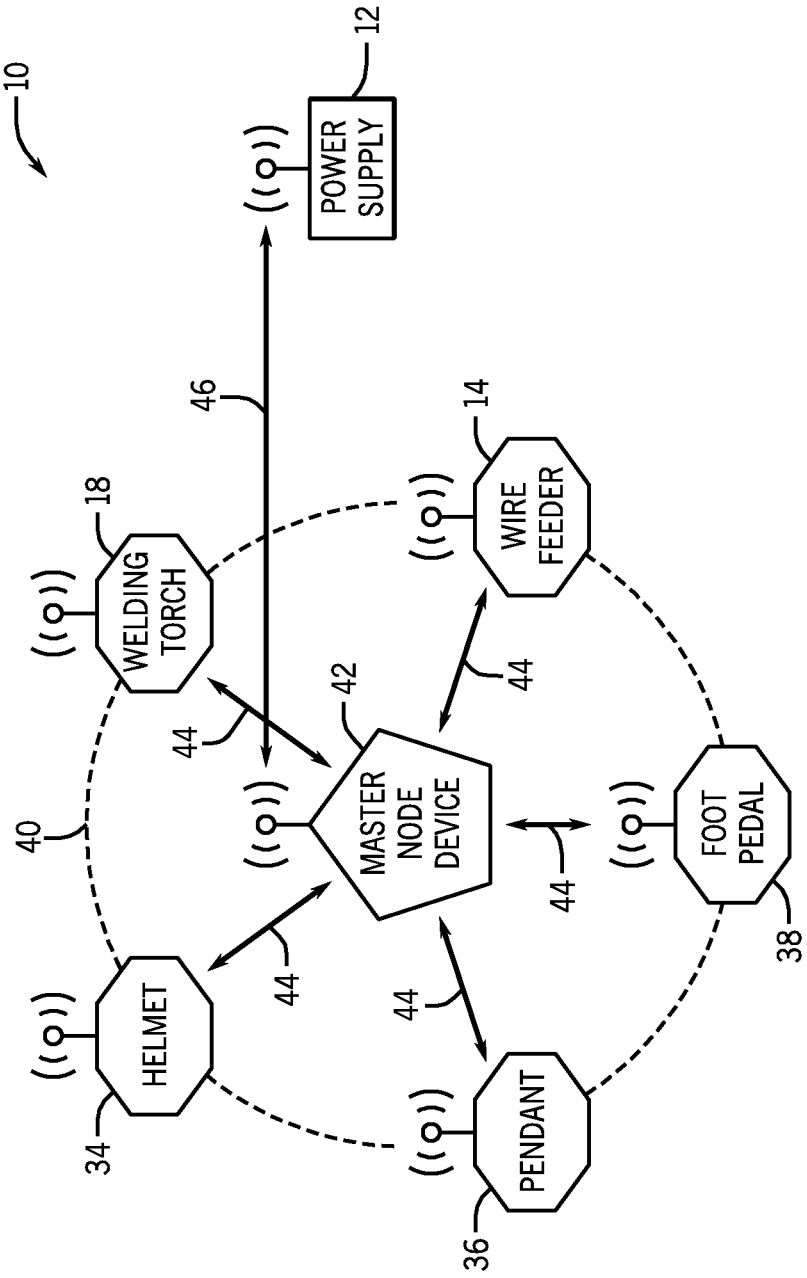
10
12
POWER SUPPLY
46
14
WIRE FEEDER
18
WELDING TORCH
44
42
MASTER NODE DEVICE
40
44
FOOT PEDAL
38
44
HELMET
44
PENDANT
34
36

FIG. 2

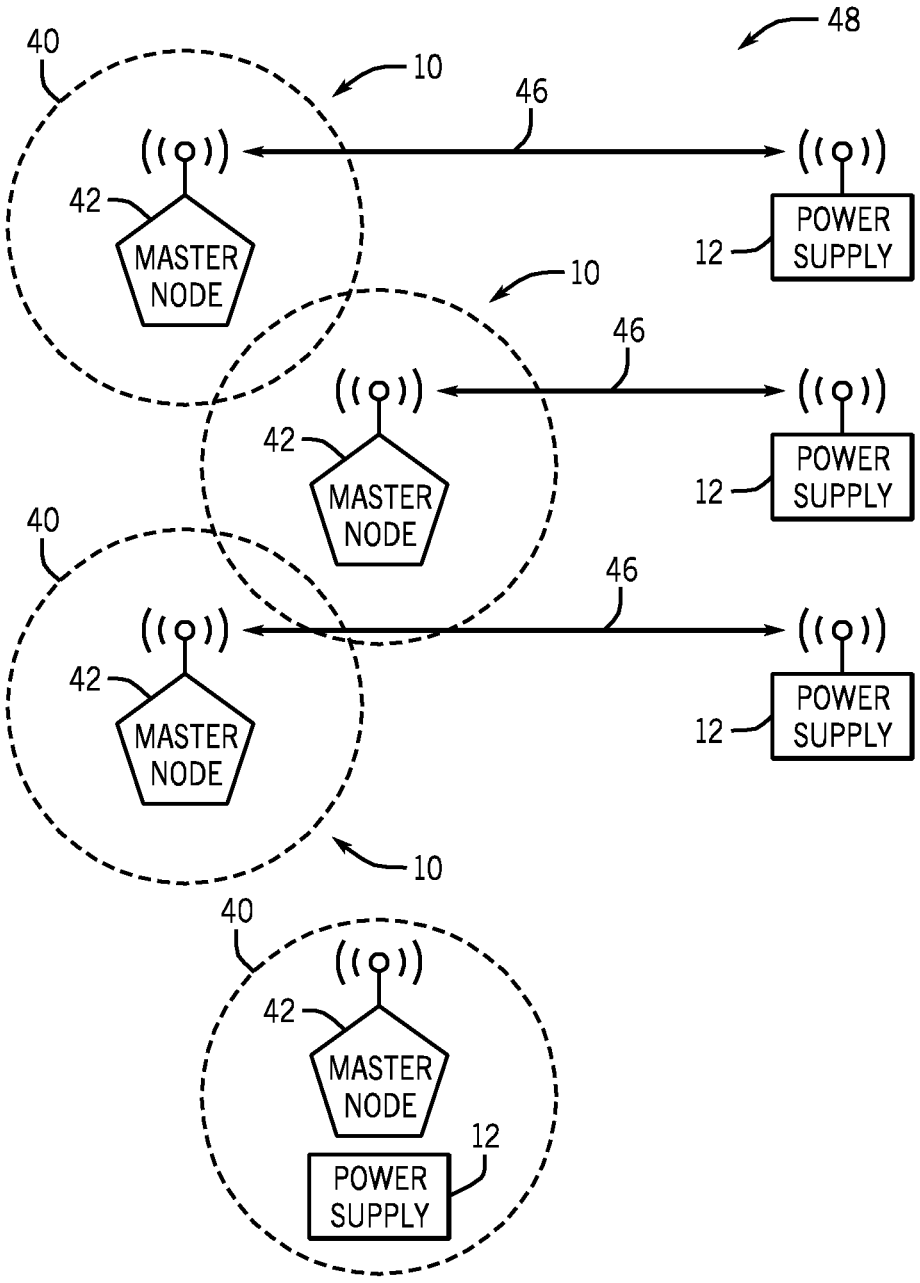
48
40
10
46
42
MASTER NODE
POWER SUPPLY
12
10
46
42
MASTER NODE
POWER SUPPLY
12
40
46
42
MASTER NODE
POWER SUPPLY
12
10
40
42
MASTER NODE
POWER SUPPLY
12

FIG. 3

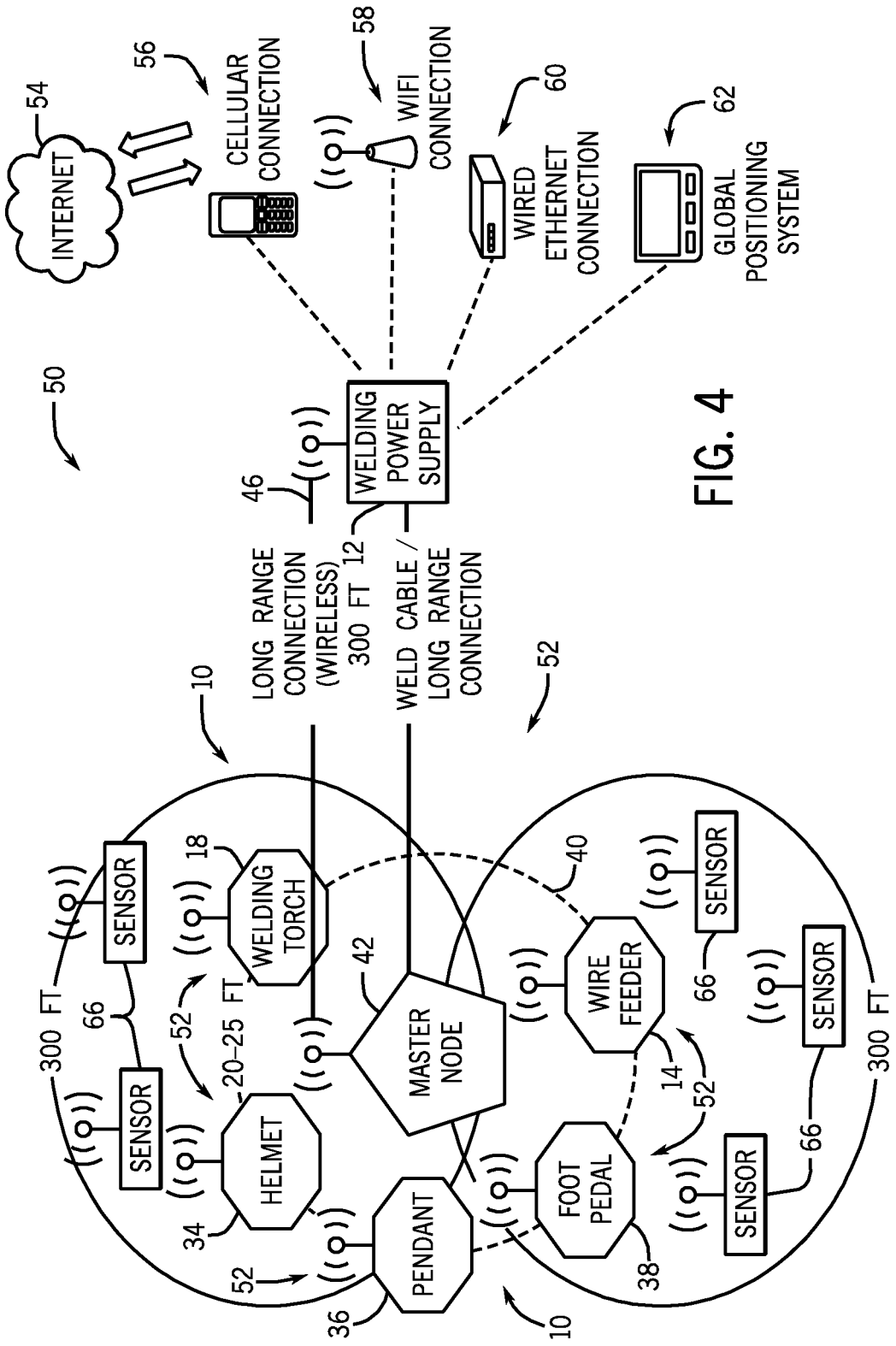
50
INTERNET
54
CELLULAR CONNECTION
56
WIFI CONNECTION
58
WIRED ETHERNET CONNECTION
60
GLOBAL POSITIONING SYSTEM
62
WELDING POWER SUPPLY
46
12
LONG RANGE CONNECTION (WIRELESS) 300 FT
WELD CABLE / LONG RANGE CONNECTION
10
52
SENSOR
66
300 FT
WELDING TORCH
18
20-25 FT
HELMET
34
PENDANT
36
MASTER NODE
42
WIRE FEEDER
40
14
FOOT PEDAL
38

FIG. 4

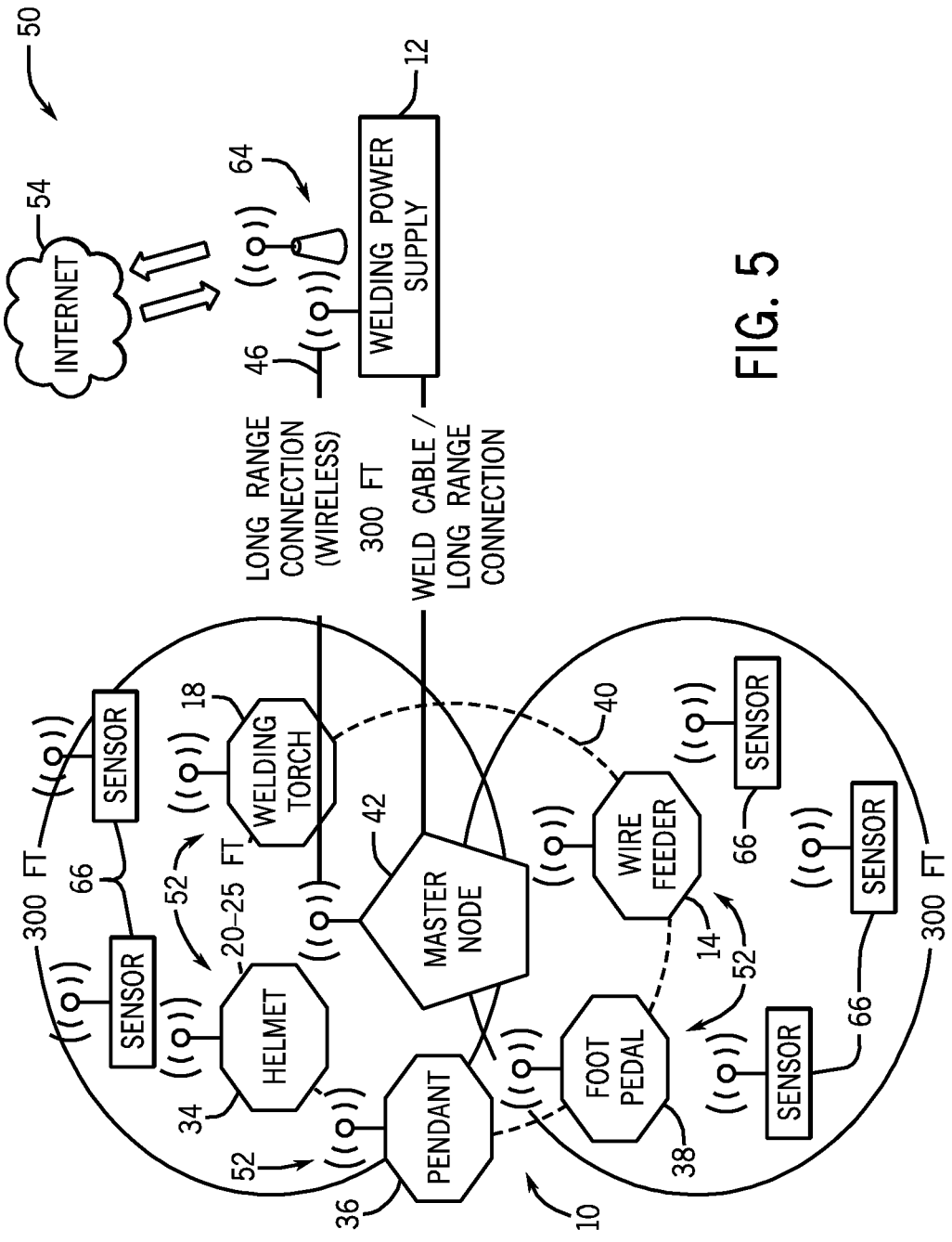
50
INTERNET
54
64
WELDING POWER SUPPLY
12
46
LONG RANGE CONNECTION (WIRELESS)
300 FT
WELD CABLE / LONG RANGE CONNECTION
SENSOR
SENSOR
300 FT
66
52
20–25 FT
WELDING TORCH
18
HELMET
34
MASTER NODE
42
PENDANT
36
52
10
WIRE FEEDER
14
40
FOOT PEDAL
38
52
SENSOR
SENSOR
SENSOR
66
66
300 FT

FIG. 5

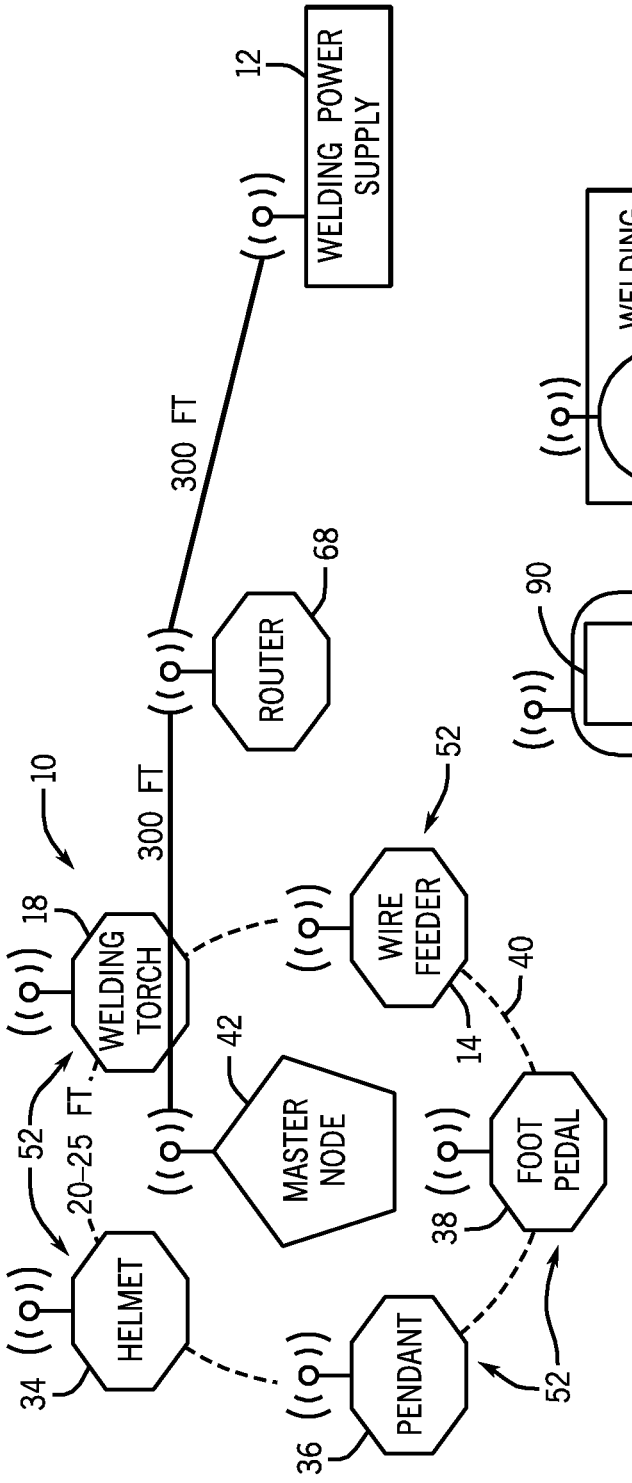
WELDING POWER SUPPLY
12
300 FT
ROUTER
68
300 FT
10
WELDING TORCH
18
WIRE FEEDER
52
MASTER NODE
42
20-25 FT.
52
14
40
FOOT PEDAL
38
HELMET
34
PENDANT
36
52

FIG. 6

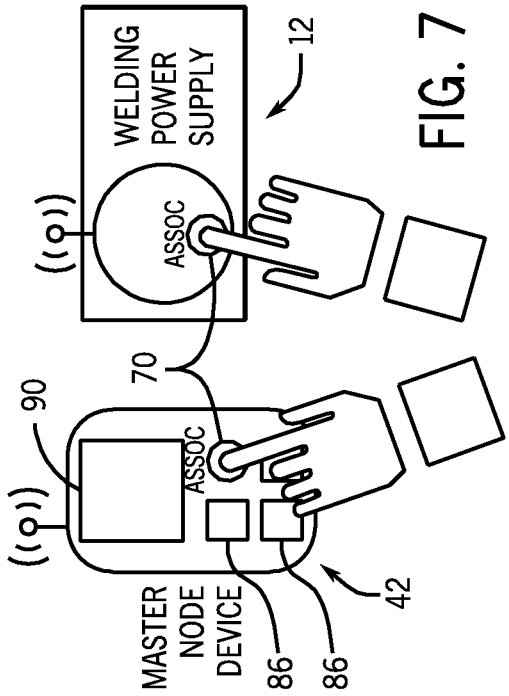
WELDING POWER SUPPLY
12
ASSOC
70
90
ASSOC
MASTER NODE DEVICE
86
86
42

FIG. 7

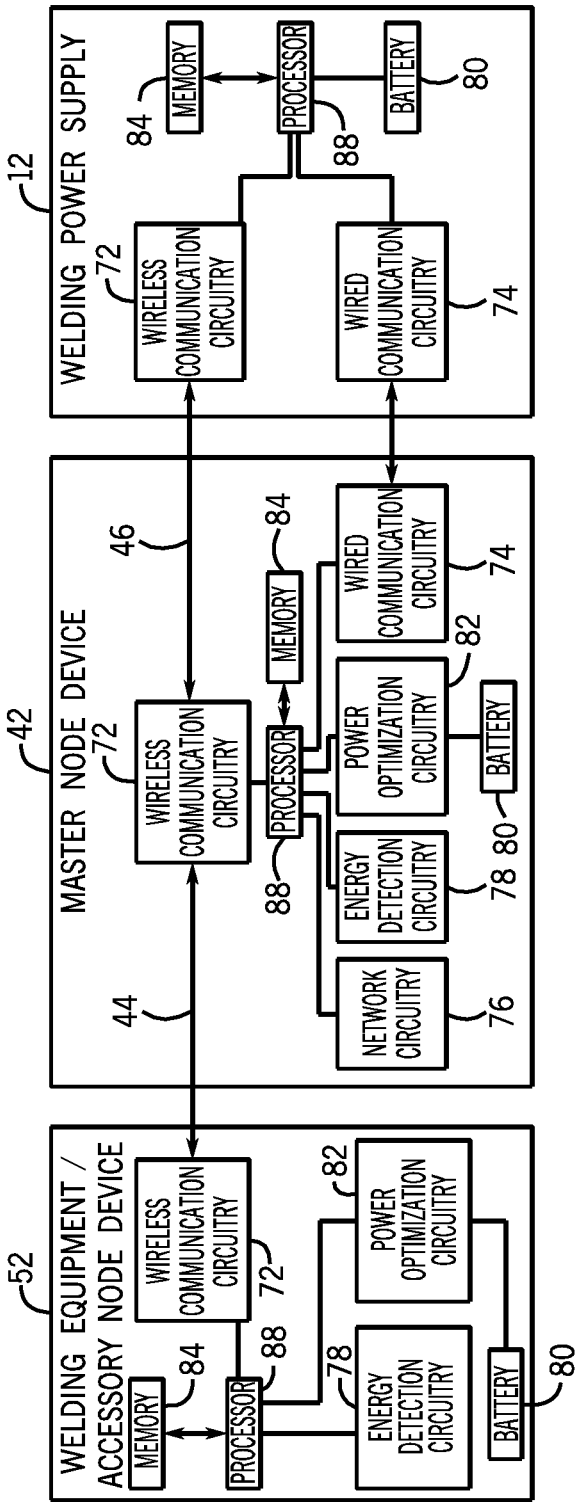
WELDING POWER SUPPLY
12
MEMORY
84
PROCESSOR
88
BATTERY
80
WIRELESS COMMUNICATION CIRCUITRY
72
WIRED COMMUNICATION CIRCUITRY
74
MASTER NODE DEVICE
42
46
44
MEMORY
84
PROCESSOR
88
WIRELESS COMMUNICATION CIRCUITRY
72
WIRED COMMUNICATION CIRCUITRY
74
POWER OPTIMIZATION CIRCUITRY
82
BATTERY
80
ENERGY DETECTION CIRCUITRY
78
NETWORK CIRCUITRY
76
WELDING EQUIPMENT / ACCESSORY NODE DEVICE
52
MEMORY
84
PROCESSOR
88
WIRELESS COMMUNICATION CIRCUITRY
72
POWER OPTIMIZATION CIRCUITRY
82
ENERGY DETECTION CIRCUITRY
78
BATTERY
80

FIG. 8

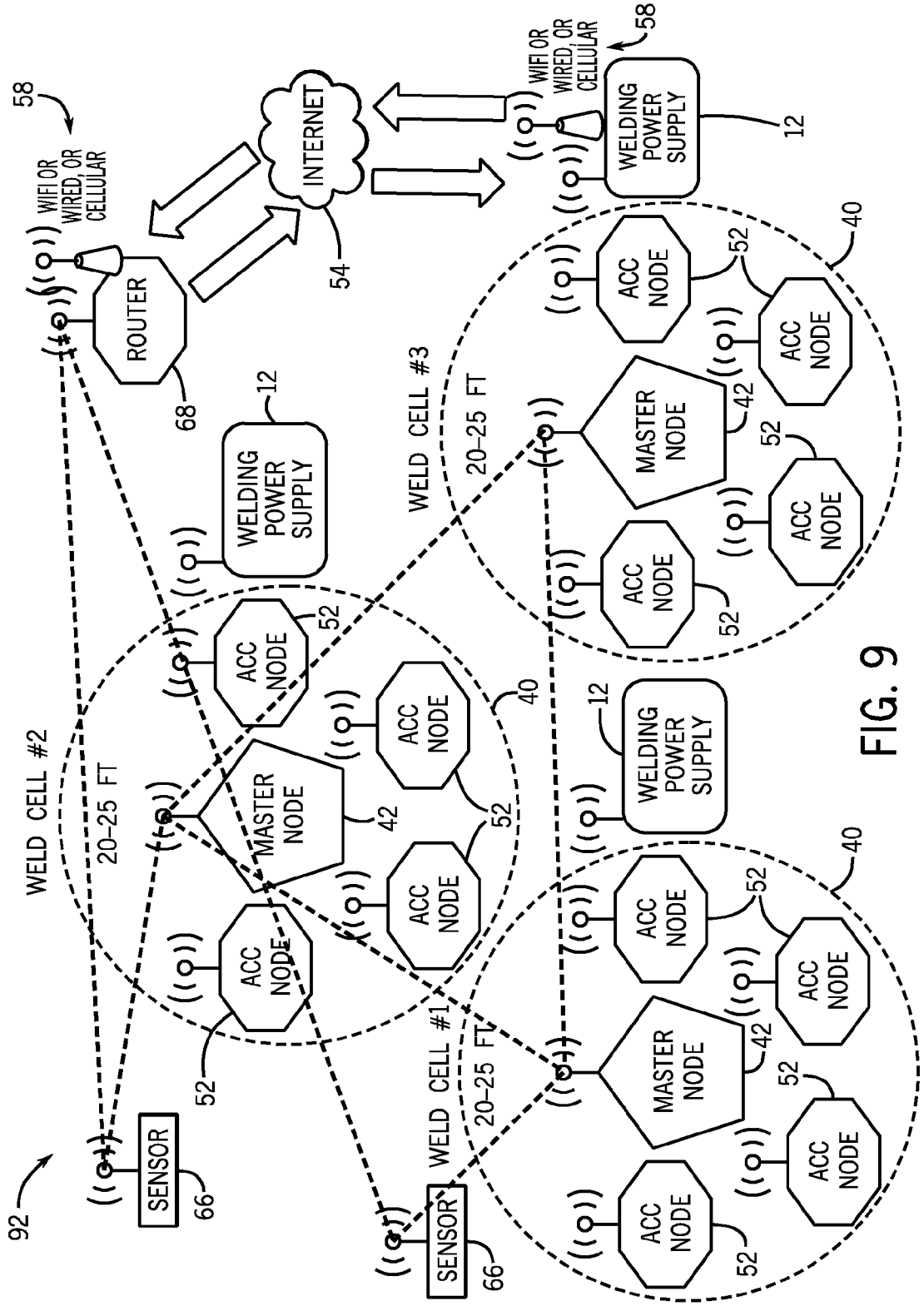
58
WIFI OR WIRED, OR CELLULAR
ROUTER
68
INTERNET
54
58
WIFI OR WIRED, OR CELLULAR
WELDING POWER SUPPLY
12
WELDING POWER SUPPLY
12
WELD CELL #2
20–25 FT
WELD CELL #3
20–25 FT
WELD CELL #1
20–25 FT
MASTER NODE
42
ACC NODE
52
40
SENSOR
66
92

FIG. 9

WIRELESS COMMUNICATION NETWORK SENSOR INFORMATION FOR CONTROL OF INDUSTRIAL EQUIPMENT IN HARSH ENVIRONMENTS

CROSS REFERENCE TO RELATED APPLICATIONS

This application is a Non-provisional U.S. Patent Application of U.S. Provisional Patent Application No. 61/684,556, entitled "Wireless Communication Network Sensor Information for Control of Industrial Equipment in Harsh Environments", filed Aug. 17, 2012, which is incorporated herein by reference in its entirety.

BACKGROUND

The invention relates generally to communications between industrial equipment and, more specifically, to a wireless communication network for control of industrial equipment in harsh environments.

Welding-related devices, such as the welding wire feeders, welding torches, welding helmets, welding control pendants, welding foot pedals, and so forth, are often operated at welding locations that are remote from sources of power, such as welding power supply units. For example, such remote welding locations may be up to, or even greater than, 300 feet from a source of power. As such, long cables are often extended to such remote welding locations, which can become very cumbersome. Moreover, in certain welding applications, such as ship building applications, a number of remote welding locations may be used at any given time in relatively small areas, thereby exacerbating the problem of extending cables to these remote welding locations. Furthermore, the use of wireless communication technologies in such environments has heretofore proven problematic, at least due to noise considerations (which generally hamper wireless communication), security considerations, and so forth.

BRIEF DESCRIPTION

These and other features, aspects, and advantages of the present invention will become better understood when the following detailed description is read with reference to the accompanying drawings in which like characters represent like parts throughout the drawings, wherein:

In one embodiment, a system includes a master node device. The master node device includes communication circuitry configured to facilitate communication with a welding power supply unit via a long-range communication link, and to facilitate wireless communication with one or more welding-related devices via a short-range wireless communication network. The master node device also includes control circuitry configured to receive sensor data from one or more sensors within a physical vicinity of the short-range wireless communication network, and to route the sensor data to final destinations for the one or more sensors.

In another embodiment, a method includes wirelessly communicating between one or more welding-related devices and a master node device via a short-range wireless communication network. The method also includes communicating between the master node device and a welding power supply unit via a long-range communication link. The method further includes receiving sensor data from one or more sensors within a physical vicinity of the short-range wireless communication network. In addition, the method includes routing the sensor data to final destinations for the one or more sensors.

In another embodiment, a wireless communication network includes one or more welding-related devices. The one or more welding-related devices comprise a welding wire feeder, a welding torch, a welding helmet, a welding pendant, or a welding foot pedal. The wireless communication network also includes a welding power supply unit configured to convert power from a power grid to power for a welding operation performed using the one or more welding-related devices. The wireless communication network further includes a master node device configured to facilitate wireless communication between the one or more welding-related devices and the master node device via a short-range wireless communication network, to facilitate communication between the master node device and the welding power supply unit via a long-range communication link, to receive sensor data from one or more sensors within a physical vicinity of the short-range wireless communication network, and to route the sensor data to final destinations for the one or more sensors.

DRAWINGS

These and other features, aspects, and advantages of the present invention will become better understood when the following detailed description is read with reference to the accompanying drawings in which like characters represent like parts throughout the drawings, wherein:

FIG. **1** is a diagram of an embodiment of a welding system that may utilize wireless communication networking techniques, in accordance with embodiments of the present disclosure;

FIG. **2** is a schematic diagram of an embodiment of the welding system of FIG. **1** wherein many of the welding equipment and accessories of the welding system form a local wireless network that communicates with the associated welding power supply unit, which may be located remotely from the welding equipment and accessories of the welding system, in accordance with embodiments of the present disclosure;

FIG. **3** is a schematic diagram of an embodiment of a welding application having a plurality of welding systems in operation at the same time, each welding system having their own local wireless networks and associated welding supply units, in accordance with embodiments of the present disclosure;

FIG. **4** is a schematic diagram of an exemplary communication system of a welding system that implements external communication device connections on a back end of the welding power supply unit, in accordance with embodiments of the present disclosure;

FIG. **5** is a schematic diagram of an exemplary communication system of a welding system that implements external communication device connections on a front end of the welding power supply unit, in accordance with embodiments of the present disclosure;

FIG. **6** is a schematic diagram of an exemplary local wireless network that is attached to a range extending wireless router, in accordance with the present disclosure;

FIG. **7** is a schematic diagram of a master node device and a welding power supply unit being associated with each other through simultaneous depression of respective association buttons on the master node device and the welding power supply unit (or any other accessory node), in accordance with embodiments of the present disclosure;

FIG. **8** is a schematic diagram of an exemplary welding power supply unit, master node device, and welding equipment/accessory node device, illustrating the internal circuitry of each device that facilitates operation of a local wireless network, in accordance with embodiments of the present disclosure; and

FIG. **9** is a schematic diagram illustrating the topology of a mesh-type network of a plurality of master node devices and associated local wireless networks (e.g., weld cells) that communicate with each other and share information about each other's capabilities, thereby facilitating sensor data transmission from a plurality of sensors, in accordance with embodiments of the present disclosure.

DETAILED DESCRIPTION

Turning to the figures, FIG. **1** is a diagram of an embodiment of a welding system **10** that may utilize wireless communication networking techniques, in accordance with embodiments of the present disclosure. It should be appreciated that, while the welding system **10** described herein is specifically presented as a gas metal arc welding (GMAW) system **10**, the presently disclosed wireless communication networking techniques may also be used with other arc welding processes (e.g., FCAW, FCAW-G, GTAW, SAW, SMAW, or similar arc welding processes). More specifically, as described in greater detail below, all equipment and accessories used in the welding system **10** may be configured to wirelessly communicate with each other, as well as communicate with centralized or distributed welding control systems. The welding system **10** includes a welding power supply unit **12**, a welding wire feeder **14**, a gas supply system **16**, and a welding torch **18**. The welding power supply unit **12** generally supplies power to the welding system **10** and other various accessories, and may be coupled to the welding wire feeder **14** via a weld cable **20** as well as coupled to a workpiece **22** using a lead cable **24** having a clamp **26**. In the illustrated embodiment, the welding wire feeder **14** is coupled to the welding torch **18** via a weld cable **28** in order to supply welding wire and power to the welding torch **18** during operation of the welding system **10**. In another embodiment, the welding power supply unit **12** may couple and directly supply power to the welding torch **18**.

In the embodiment illustrated in FIG. **1**, the welding power supply unit **12** may generally include power conversion circuitry that receives input power from an alternating current power source **30** (e.g., the AC power grid, an engine/generator set, or a combination thereof), conditions the input power, and provides DC or AC output power via the weld cable **20**. As such, the welding power supply unit **12** may power the welding wire feeder **14** that, in turn, powers the welding torch **18**, in accordance with demands of the welding system **10**. The lead cable **24** terminating in the clamp **26** couples the welding power supply unit **12** to the workpiece **22** to close the circuit between the welding power supply unit **12**, the workpiece **22**, and the welding torch **18**. The welding power supply unit **12** may include circuit elements (e.g., transformers, rectifiers, switches, and so forth) capable of converting the AC input power to a direct current electrode positive (DCEP) output, direct current electrode negative (DCEN) output, DC variable polarity, or a variable balance (e.g., balanced or unbalanced) AC output, as dictated by the demands of the welding system **10** (e.g., based on the type of welding process performed by the welding system **10**, and so forth).

The illustrated welding system **10** includes a gas supply system **16** that supplies a shielding gas or shielding gas mixtures to the welding torch **18**. In the depicted embodiment, the gas supply system **16** is directly coupled to the welding torch **18** via a gas conduit **32** that is part of the weld cable **20** from the welding power supply unit **12**. In another embodiment, the gas supply system **16** may instead be coupled to the welding wire feeder **14**, and the welding wire feeder **14** may regulate the flow of gas from the gas supply system **16** to the welding torch **18**. A shielding gas, as used herein, may refer to any gas or mixture of gases that may be provided to the arc and/or weld pool in order to provide a particular local atmosphere (e.g., shield the arc, improve arc stability, limit the formation of metal oxides, improve wetting of the metal surfaces, alter the chemistry of the weld deposit, and so forth).

In addition, in certain embodiments, other welding equipment and welding accessories (e.g., welding-related devices) may be used in the welding system **10**. For example, in most welding applications, a welding helmet **34** may be worn by an operator of the welding system **10**. The welding helmet **34** provides protection to the operator of the welding system **10**, particularly protecting the eyes of the operator from the flashing associated with the welding arc during welding operations. In addition, in certain embodiments, the welding helmet **34** may provide feedback to the operator related to parameters of the welding operations. For example, the welding helmet **34** may include an internal display configured to display the welding parameters to the operator during the welding operations. In addition, in certain embodiments, a welding control pendant **36** may be used to communicate between the welding wire feeder **14** and the welding torch **18**. The welding control pendant **36** is a device that may be used at a welding application remote from an associated welding power supply unit **12** and/or welding wire feeder **14**, yet still provide substantially the same display and input devices that the remote welding power supply unit **12** and/or welding wire feeder **14** provide. In other words, the welding control pendant **36** may be used as a remote control panel when it is not feasible or practical to use control panels on an associated remote welding power supply unit **12** and/or welding wire feeder **14**. In addition, in certain embodiments, a foot pedal **38** may also be used in the welding system **10**. The foot pedal **38** may be used to adjust welding parameters of the welding power supply unit **12** and/or the welding wire feeder **14**. For example, when an operator of the welding system **10** presses down on the foot pedal **38**, a welding wire feed speed and/or welding current from the welding wire feeder **14** and/or the welding power supply unit **12** may be increased.

The welding equipment and accessories illustrated in FIG. **1** are merely exemplary and not intended to be limiting. Many other types of welding equipment and accessories may also be used in conjunction with the welding system **10**. As described in greater detail below, all welding equipment and accessories used in association with the welding system **10** may be configured to wirelessly communicate with each other, as well as communicate with centralized and/or distributed welding control systems. More specifically, the wireless communication networking techniques described herein include intelligent wireless nodes and electrical interfaces to industrial equipment (e.g., in the exemplary welding equipment and accessories illustrated in FIG. **1**) to be used to control and coordinate command and data communications with and between other industrial equipment wirelessly, such that the communication network enables seamless and secure exchange of welding parameters, as well as job information and other user data, between the industrial equipment. Such wireless communication networking techniques enable welding personnel or other industrial equipment personnel, with little or no experience in areas of communication theory, radio frequency technology, or information technology, to

easily assemble and operate wireless communication networks that include a plurality of various equipment and accessories, such as the welding equipment and accessories illustrated in FIG. **1**. The wireless communication networking techniques described herein make it easy and intuitive for the aforementioned personnel to manually assemble a wireless network at the job site, and begin using such wireless networks to perform safe and secure control of the welding equipment and accessories, as well as exchange information with other parties in the welding shop or at areas remote from the welding shop.

FIG. **2** is a schematic diagram of an embodiment of the welding system **10** of FIG. **1** wherein many of the welding equipment and accessories (e.g., the welding wire feeder **14**, the welding torch **18**, the welding helmet **34**, the welding control pendant **36**, the foot pedal **38**, and so forth) of the welding system **10** form a local wireless network **40** that communicates with the associated welding power supply unit **12**, which may be located remotely (e.g., up to or exceeding 300 feet away) from the welding equipment and accessories of the welding system **10**, in accordance with embodiments of the present disclosure. More specifically, each of the welding equipment and accessories of the welding system **10** may be specifically configured to communicate wirelessly with a master node device **42** that, in turn, communicates with the respective welding power supply unit **12** of the welding system **10**. As such, the local wireless network **40** is formed as a star configuration between the master node device **42** and the welding equipment and accessories of the welding system **10** (e.g., via local wireless connections **44**), and the local network **40** communicates wirelessly with the respective welding power supply unit **12** through the master node device **42** (e.g., via a long-range communication connection **46**), which functions as a network controller for the local wireless network **40**. As described in greater detail below, in certain embodiments, the long-range communication connection **46** may be a long-range wireless communication connection (e.g., using wireless communication techniques), as illustrated in FIG. **2**. However, in other embodiments, the long-range communication connection **46** may be a long-range wired communication connection (e.g., using wired communication techniques). Indeed, in certain embodiments, the master node device **42** may be configured to communicate with the welding power supply unit **12** in both (or either, depending on operating conditions) a wireless mode and a wired mode.

It will be appreciated that, in any particular industrial setting, more than one welding system **10** may be used in relatively close proximity of one another. For example, in a ship building application, several welding systems **10** having several associated welding power supply units **12** may be used at any given time on the ship being constructed. In such a scenario, multiple local wireless networks **40** may be established (e.g., one for each welding system **10**). FIG. **3** is a schematic diagram of an embodiment of a welding application **48** having a plurality of welding systems **10** in operation at the same time, each welding system **10** having their own local wireless network **40** and associated welding power supply unit **12**. As illustrated in FIG. **3**, some of the welding systems **10** may have their respective welding power supply units **12** located within the local wireless coverage zone (e.g., within approximately 20-25 feet, in certain embodiments) of the respective local wireless network **40**, whereas many other welding systems **10** may have their respective welding power supply units **12** located outside of the local wireless coverage zone of the respective local wireless network **40**. In addition, many of the local wireless coverage zones of the local wireless networks **40** may overlap. As described in greater detail below, the wireless communication networking techniques presented herein address any issues that may arise with respect to such overlapping wireless coverage.

FIG. **4** is a schematic diagram of an exemplary communication system **50** of a welding system **10** that implements external communication device connections on a back end of the welding power supply unit **12**, and FIG. **5** is a schematic diagram of an exemplary communication system **50** of a welding system **10** that implements external communication device connections on a front end of the welding power supply unit **12**, in accordance with embodiments of the present disclosure. The communication system **50** described herein specifies a local wireless network **40** configured as a specific star configuration, and formed by a network controller (i.e., the master node device **42**) and various welding equipment/accessory node devices **52** (e.g., the welding wire feeder **14**, the welding torch **18**, the welding helmet **34**, the welding control pendant **36**, the foot pedal **38**, and so forth) located within a reasonably short distance of each other. For example, the reasonably short distance may be approximately 20-25 feet from the master node device **42** and, in certain embodiments, may be in a range of approximately 10 feet to approximately 50 feet from the master node device **42**, in a range of approximately 15 feet to approximately 40 feet from the master node device **42**, in a range of approximately 20 feet to approximately 30 feet from the master node device **42**, or any other suitable range. The physical size (e.g., wireless transmission range) of the local wireless network **40** is not necessarily fixed, nor is it an absolute requirement for proper operation of the local wireless network **40**. For example, in certain embodiments, the operating (e.g., wireless transmission) range of the local wireless network **40** may be a parameter of the master node device **42**, which may be automatically adjusted by the master node device **42** to provide optimum wireless communication link quality. Although not being a fixed parameter or being an absolute requirement for operation of the local wireless network **40**, the shorter the distance (e.g., wireless operating range) of the local wireless network **40**, the more likely the wireless communication link integrity will remain relatively high. For example, radio frequency (RF) waves that travel shorter distances will generally maintain higher communication link integrity. Furthermore, shorter communication distances of the local wireless network **40** may even further enhance the security of the local wireless network **40**, as well as ensure that other local wireless networks **40** do not potentially interfere with each other.

The communications traffic from each equipment/accessory node device **52** is sent to the master node device **42**, which acts as a router and prioritization controller, and which ultimately routes the correct messages in the proper order to their final destinations, as illustrated in FIGS. **4** and **5**. More specifically, in certain embodiments, the master node device **42** communicates with the welding power supply unit **12** of the welding system **10** via a radio frequency (RF) communication link as the long-range communication connection **46**. As such, the master node device **42** may communicate with the welding power supply unit **12**, which may be located at distances of up to, or exceeding, 300 feet from the master node device **42**, without using wired communication. However, in certain embodiments, the weld cables **20**, **28** (or dedicated digital link connections) may be used as backup communication channels in the event that conditions do not allow communication over the long-range communication connection **46** between the master node device **42** and the associated welding power supply unit **12**.

In certain embodiments where the welding wire feeder **14** is used proximate to the local wireless network **40** and remote from the welding power supply unit **12**, the master node device **42** may be attached at the end of the weld cable **20** illustrated in FIG. **1** proximate to, for example, the welding wire feeder **14**. Similarly, in certain embodiments where the welding wire feeder **14** is used remotely from the local wireless network **40** (e.g., proximate to the welding power supply unit **12**), the master node device **42** may be attached at the end of the weld cable **28** illustrated in FIG. **1** (or a dedicated digital communication cable) proximate to, for example, the welding torch **18**. As described above, the master node device **42** is a wireless device that is associated with the local wireless network **40** and, through its physical placement proximate to the welding operations, enables a relatively long range link to the welding power supply unit **12** to be extended or made to cover areas normally blocked by physical obstructions like metal or dense concrete walls, mounds of dirt, and so forth. The long-range communication connection **46** (e.g., an RF communication link, in certain embodiments) is considered a special link with the local wireless network **40** due to the physical constraints placed on it, such as the relatively long signal travel distance, possible loss of RF line of sight, excessive reflections caused by multi-path effects, relatively low RF transmission power, and so forth.

The local wireless network **40** that is assembled by the user will be secure insofar as only equipment and accessories with the proper credentials and having synchronized "user intent" information are allowed to "associate" with the local wireless network **40**. In addition, the master node device **42** is allowed to control only one welding power supply unit **12**. In certain embodiments, the final destinations for control and communication data originated in the local wireless network **40** are the various welding equipment/accessory node devices **52**. For example, as illustrated in FIGS. **4** and **5**, the welding power supply unit **12** allows an operator working within the coverage area of the local wireless network **40** to control the welding power supply unit **12**, as well as to read operating parameters (e.g., voltage and amperage settings, contactor on/off status, and so forth) from the welding power supply unit **12**. In the embodiment illustrated in FIG. **4**, the welding power supply unit **12** may provide access for data from the local wireless network **40** to be transferred to remote locations on the Internet **54** (e.g., to cloud storage, for example) through various hardware interfaces (e.g., a "back end" of the welding power supply unit **12**) such as, but not limited to, cellular network communications **56**, WiFi access **58**, a wired Ethernet connection **60** (e.g., a local area network (LAN)), a global positioning system (GPS) **62**, and so forth.

The local wireless network **40**, through implementation of special security features described herein, connects to what is referred to as the "front end" of the welding power supply unit **12** or other industrial equipment to be controlled, by the local wireless network **40**. Access to the front end allows full control over the power supply and lockout of the normal user interfaces (e.g., on the welding power supply unit **12**) in order to ensure personnel safety. The control philosophy is that there may be only one human controller of the welding equipment and accessories (e.g., the welding equipment/accessory node devices **52**) associated with the welding power supply unit **12** at any one time. The local wireless network **40** implements several security features to prevent unauthorized access to the local wireless network **40**, and thereby to the front end of the device being controlled (e.g., the welding power supply unit **12**).

Data transfer from the front end of the welding power supply unit **12** to the "back end" of the welding power supply unit **12** (through which communications to/from the welding power supply unit **12** are made), and vice versa, may be controlled through a proprietary security firewall (e.g., within the welding power supply unit **12**) that is designed to satisfy all the requirements of equipment safety and authorized access of the data generated in the local wireless network **40**. In situations where the welding power supply unit **12** does not implement a back end connection to external (public) networks (see, e.g., FIG. **5**), a method of providing a gateway on the front end (e.g., of the welding power supply unit **12**) allows access to the Internet **54** (e.g., to cloud storage, or other centralized and/or distributed control system). As such, in the event that the welding power supply unit **12** does not possess the hardware and/or software required to implement back end connectivity to the Internet **54**, a special gateway device may be implemented that provides the connections. For example, this type of connectivity may be implemented in a dongle-type device **64**, which may implement both the front end functionality and the back end functionality when connected to either or all of the cellular network communications **56**, the WiFi access **58**, the wired Ethernet connection **60**, the GPS **62**, and so forth. Such dongle-type device **64** may plug into an easily accessible connector on the welding power supply unit **12**, allowing the dongle-type device **64** to draw the power necessary for full-time maintenance of the various communication links. Advantageously, older welding power supply units **12** already in the field may be retrofitted with such a dongle-type device **64**, allowing them to provide intelligent control of the welding power supply unit **12**, in addition to data access to the Internet **54**. In other words, the wireless node connections from the welding power supply unit **12** may be either built into the welding power supply unit **12** or supported as a dongle-type device **64**, which may be plugged into some access port connector implemented in the welding power supply unit **12**.

The master node device **42** is a device that maintains a relatively long-range (e.g., up to, or even exceeding, 300 feet in length) communication connection **46** with the welding power supply unit **12** of the welding system **10** such that the data integrity of the link between the two is relatively high, while providing fail safe modes of operation. The master node device **42** also controls the local wireless network **40** formed by the various welding equipment/accessory node devices **52** that have been successfully associated with the local wireless network **40**, and maintains relatively high link quality of service (LQS) with those welding equipment/accessory node devices **52**. The long-range communication connection **46** between the master node device **42** and the welding power supply unit **12** may be an RF link or hardwired digital communication of a "differential signaling" mode such as, but not limited to, RS-485, RS-422, RS-644 and others.

In certain embodiments, the master node device **42** may be physically located within or adjacent to the enclosures of any of the welding equipment/accessory node devices **52** illustrated in FIGS. **4** and **5**. In other words, in certain embodiments, the master node device **42** may be implemented in the welding wire feeder **14**, in the welding torch **18**, in the welding helmet **34**, in the welding control pendant **36**, in the foot pedal **38**, and so forth. For example, as described above, the welding wire feeder **14** feeds welding wire of various types and sizes to the welding torch **18** to accomplish the act of welding. Wire feeders typically take their input from welding power supplies, such as the welding power supply unit **12**, and produce welding wire feed speeds relative to the energy being delivered through weld cables (e.g., the weld cables **20**, **28** illustrated in FIG. **1**) to a welding torch (e.g., the welding torch **18**). In certain embodiments, the functionality of the

master node device **42** may be implemented within an enclosure (e.g., housing) of the welding wire feeder **14**.

As another example, as described above, the welding helmet **34** is a device that is worn on the head of an operator of the welding system **10**, and which shields the eyes of the operator from ultraviolet (UV) rays and debris generated during the welding process. The welding helmet **34** may also provide data to the operator (e.g., through the use of a display panel or other indicator lights within the welding helmet **34**) relating to welding parameters currently set on the welding power supply unit **12**, such as voltage, current, contact closure status, and so forth. The welding helmet **34** may also send data to the welding power supply unit **12**, wherein the data is generated by the operator (e.g., through activation of buttons, keypads, and other user interface elements on the welding helmet **34**). In certain embodiments, the functionality of the master node device **42** may be implemented within the welding helmet **34**.

As a further example, as described above, the welding control pendant **36** is often a battery-powered, hand-held device with a graphics display or 7-segment display that provides a user interface, allowing the operator to observe the welding parameters and settings of the welding power supply unit **12** (and, in certain embodiments, the welding wire feeder **14**), as well as send commands to the welding power supply unit **12** (and, in certain embodiments, the welding wire feeder **14**) to operate in various modes. In certain embodiments, the welding control pendant **36** has several control buttons that allow for operator control of the welding power supply unit **12**. In addition, other information from the various welding equipment/accessory node devices **52** of the local wireless network **40** may be displayed on the welding control pendant **36** and/or sent from the welding control pendant **36** to other welding equipment/accessory node devices **52** of the local wireless network **40**. In certain embodiments, the functionality of the master node device **42** may be implemented within the welding control pendant **36**.

As a further example, as described above, the foot pedal **38** is a device located on the floor that allows the operator of the welding system **10** to depress its top platform in order to signal to the welding power supply unit **12** (and, in certain embodiments, the welding wire feeder **14**) certain adjustments to the voltage, current, contactor state, and so forth. In certain embodiments, the functionality of the master node device **42** may be implemented within the body of the foot pedal **38**. In addition, in certain embodiments, the functionality of the master node device **42** may be implemented within the body of the welding torch **18**.

As illustrated in FIGS. **4** and **5**, the local wireless network **40** may also include a plurality of sensors **66** that, in certain embodiments, may be battery-powered RF devices that can communicate with any nearby master node device **42**. The sensors **66** may send data through the master node device **42** such that the data may be uploaded to the Internet **54**. In certain embodiments, the sensors **66** may not actually even be associated with operations of the particular local wireless network **40**. In other words, certain sensors **66** may not be used to control the welding power supply unit **12** associated with the master node device **42** through which the sensors **66** communicate. However, the sensors **66** may nevertheless be allowed to use the local wireless network **40** and freely associate with any local wireless network **40** in order to allow for their data payload to be transported to a specific destination (e.g., cloud storage or other centralized and/or distributed control system). In other words, the master node devices **42** may be used to enable data communication of the sensors **66** regardless of whether the sensors **66** are part of the welding system **10** that is used for welding operations, and do not require any manual association means to join a local wireless network **40**.

In certain situations using a long-range wireless communication connection **46**, the distances between the master node device **42** and the welding power supply unit **12** being controlled may be longer than the RF waves (or other wireless signals) of the master node device **42** may travel with no (or acceptable) loss of integrity. As such, in these instances, a range extending wireless router **68** may be used to bridge the gap between the master node device **42** and the associated welding power supply unit **12**. FIG. **6** is a schematic diagram of an exemplary local wireless network **40** that is attached to a range extending wireless router **68**, in accordance with the present disclosure. As with the master node devices **42**, an ideal range of the range extending wireless routers **68** may be approximately 300 feet, and if the distance between the master node device **42** and the associated welding power supply unit **12** is substantially greater than 300 feet, a range extending wireless router **68** may be located between the master node device **42** and the associated welding power supply unit **12**.

In certain embodiments, as described in greater detail below, the associations between a master node device **42** and the various welding equipment/accessory node devices **52** of the local wireless network **40** are formed when the operator of the welding system **10** holds two devices in close proximity (e.g., within approximately two feet) and simultaneously presses "associate" buttons on each device. For example, FIG. **7** is a schematic diagram of a master node device **42** and a welding power supply unit **12** being associated with each other through simultaneous depression of respective association buttons **70** on the master node device **42** and the welding power supply unit **12** (or any other accessory node), in accordance with embodiments of the present disclosure. Although illustrated as being buttons **70**, any suitable means (e.g., synchronization mechanism) for manually initiating association of the devices may be used in certain embodiments, so long as the synchronization mechanism is adequately conveys the wishes of the welding operator to join the devices into a control and command network (e.g., the local wireless network **40**). The various welding equipment/accessory node devices **52** also include similar means for manually initiating association of the welding equipment/accessory node devices **52** with the master node device **42**. As such, the association procedure accepts user intent in forming the local wireless network **40**, which once formed will be used for the duration of a networking session to control and monitor the welding power supply unit **12** associated with the master node device **42**. Once the local wireless network **40** is established, additional welding equipment/accessory node devices **52** may be added to the local wireless network **40** by repeating the association procedure between the master node device **42** and the additional welding equipment/accessory node devices **52**.

The master node device **42** keeps track of and controls all aspects of communication between the welding equipment/accessory node devices **52** associated with the local wireless network **40** of the master node device **42** until a control session has ended. Ending a control session may be accomplished in several ways. For example, the control session may be ended when the master node device **42** is removed from the local wireless network **40**. As an example, if the master node device **42** has not received or transmitted a control signal to or from the local wireless network **40** for a specified period of time (e.g., approximately 5 seconds in certain embodiments), the control session of the local wireless network **40** may be ended. This condition may occur if the master node device **42**

is powered off, or if the master node device **42** is prevented through any means from communicating with its associated welding equipment/accessory node devices **52**. In certain embodiments, in the absence of valid "heartbeats" (i.e., communications either to or from the master node device **42**), each welding equipment/accessory node device **52** will disassociate itself from the local wireless network **40**, set its corresponding function to idle, and enter a standby or sleep mode. This heartbeat mechanism may intelligently return the welding power supply unit **12** to a safe condition if the communication link between the master node device **42** and the welding power supply unit **12** is interrupted. Another situation where the control session may be ended is when the welding power supply unit **12** "disappears" from the local wireless network **40** to which it was associated, such as when the interface dongle-type device **64** has been removed from the access port connector of the welding power supply unit **12**, or when the welding power supply unit **12** has been removed from a power source (with the welding power supply unit **12** not having access to an alternate source of backup power). In certain embodiments, if the master node device **42** observes that the welding power supply unit **12** is not accessible for a specified period of time (e.g., approximately 5 seconds in certain embodiments), the master node device **42** may determine that the control session of the local wireless network **40** has ended, disassociate the associated welding equipment/accessory node devices **52** from the local wireless network **40**, close the networking session, and put itself in a standby or sleep mode.

Once a local wireless network **40** is established, commands and messages may be sent to the welding power supply unit **12** from the master node device **42**, such messages originating either in the master node device **42** or in the associated welding equipment/accessory node devices **52**. Commands and messages received by the master node device **42** from the associated welding equipment/accessory node devices **52** are packetized, combined in an optimum data size and packet rate, and either buffered or sent immediately by the master node device **42** to the welding power supply unit **12**. Each communication is acknowledged by the receiver, and checked for integrity using checksums, AES (advanced encryption standard) security signatures, and so forth.

Therefore, the local wireless network **40** implements wireless communication networking techniques for controlling and coordinating command and data communications between various pieces of industrial equipment (e.g., the welding equipment/accessory node devices **52**). More specifically, the local wireless network **40** includes intelligent wireless nodes with electrical interfaces to industrial equipment, such as the welding equipment/accessory node devices **52** and the welding power supply unit **12**. The wireless communication techniques described herein allow for reuse of the welding equipment/accessory node devices **52** by other personnel in other locations once a job is completed by disassociating the old local wireless network **40** and manually reprogramming the welding equipment/accessory node devices **52** as the welding equipment/accessory node devices **52** of the new local wireless network **40** through the simple and intuitive methods described herein.

In addition, the wireless communication networking techniques described herein provide improved network robustness. For example, the wireless communication networking techniques described herein allow multiple local wireless networks **40** to be operated within RF range of each other without harm or disruption occurring in adjacent wireless networks (e.g., other local wireless networks **40**). In particular, the architecture is robust and intelligent enough to handle a multitude of wireless control and communication networks in a welding shop of industrial fabrication facility. For example, in certain embodiments, the master node device **42**, upon establishing a new local wireless network **40**, will scan all channels in the ISM (industrial scientific and medical band) frequency range looking for other master node devices **42** operating adjacent local wireless networks **40**. If an adjacent master node device **42** is found using the same ISM channel, the scanning master node device **42** will investigate the possibility of moving its own local wireless network **40** to another channel, and will communicate that information to the other master node devices **42** that have been detected in the vicinity.

Furthermore, the wireless communication networking techniques described herein provide improved methods of dealing with interference from other wireless nodes operating in the unlicensed ISM band, such as WiFi, Bluetooth, or Zigbee radios, or general noise sources such as other welding power supply units **12** operating in the vicinity. Such welding noise has the potential of generating large RF energy spikes in frequency bands that overlap the ISM band. The master node device **42**, upon establishing a new local wireless network **40**, will scan all channels in the ISM band looking for noise sources. If noise sources are detected in the ISM channel currently used by the master node device **42**, the master node device **42** will investigate other ISM channels to move to, and when a suitable ISM channel has been found, the master node device **42** will reprogram all of its associated welding equipment/accessory node devices **52** to the new ISM channel number. In certain embodiments, a recursive check may continuously try to find the most noise-free ISM channel available.

Moreover, the wireless communication networking techniques described herein provide improved power optimization of the welding equipment/accessory node devices **52**. For example, the wireless communication networking techniques described herein allows for low power operation and programmable wake times for welding equipment/accessory node devices **52** assembled in the local wireless network **40**. The timing parameters related to powering the welding equipment/accessory node devices **52** are determined based on the operator's need for bandwidth and responsiveness, balanced around a function of available battery energy. Each master node device **42** determines the requirements of the welding equipment/accessory node devices **52** associated with it, and performs power management on the welding equipment/accessory node devices **52** requesting support. Welding equipment/accessory node devices **52** that need to have their power managed by the master node device **42** may be put into sleep mode with a wake timer programmed for a time period that still allows for the minimum response time required by the network parameters for proper communication and acceptable response latency. If the latency required is 0 (or instantaneous), none of the welding equipment/accessory node devices **52** in the local wireless network **40** will be allowed to go into sleep mode.

Once programmed with a wake time, each welding equipment/accessory node device **52** requesting power management may be put in a "deep sleep mode" for the predefined period of time. When the sleep period elapses, the welding equipment/accessory node device **52** wakes up and is available to respond to a heartbeat acknowledgement message that is sent from the master node device **42**. When welding equipment/accessory node devices **52** are disassociated from the local wireless network **40**, they are programmed to go into the

deep sleep mode, from which they will only wake up when an operator attempts to associate them into a new local wireless network **40**.

In certain embodiments, the wireless communication networking techniques described herein may additionally provide an "adaptive" method of determining when to check for noise sources on different radio channels based on history and time averages accumulated as a result of continued operation at a given job site. Using adaptive techniques enables the master node device **42** to maximize battery life of the welding equipment/accessory node devices **52** by understanding and predicting when noise mitigation countermeasures are more likely needed to be employed.

In addition, the wireless communication networking techniques described herein provide improved association and security of welding equipment/accessory node devices **52** within a given local wireless network **40**. For example, the wireless communication networking techniques described herein enable workers in industrial settings, such as welders in an industrial fabrication setting, to associate different industrial equipment devices (e.g., the welding equipment/accessory node devices **52** described herein) by simply bringing them in close proximity to each other and simultaneously pressing association buttons **70** on both devices, forming a secure control and communication network (e.g., the local wireless network **40**). Additional devices (e.g., the welding equipment/accessory node devices **52** described herein) may thus be added to the local wireless network **40** by associating them with the master node device **42**.

Furthermore, the wireless communication networking techniques described herein provide for network sensor information to be collected and distributed as needed. For example, the wireless communication networking techniques described herein allow sensor nodes (e.g., the sensors **66**) in industrial settings to associate with any nearby local wireless networks **40**, allowing transport of sensor data to a local supervisor, to cloud storage, to centralized and/or distributed control systems, and so forth. The sensors **66** that have been programmed with an IP address of a final destination may request access to that location from any nearby local wireless networks **40**, and such local wireless networks **40** will (through intelligent mapping of their capabilities and capabilities of other nearby networks) allow the sensor data to be forwarded on to its final destination. In certain embodiments, the sensors **66** will not destroy their local data (e.g., if infinite data retention has not been enabled) until they receive a secure acknowledgement from the final destination that the sensor data was received and is not corrupted in any way.

FIG. **8** is a schematic diagram of an exemplary welding power supply unit **12**, master node device **42**, and welding equipment/accessory node device **52** (e.g., the welding wire feeder **14**, the welding torch **18**, the welding helmet **34**, the welding control pendant **36**, the foot pedal **38**, and so forth), illustrating the internal circuitry of each device that facilitates operation of a local wireless network **40**, in accordance with embodiments of the present disclosure. For example, as illustrated in FIG. **8**, the master node device **42** includes wireless communication circuitry **72** configured to facilitate wireless communication with the welding power supply unit **12** via a long-range wireless communication link (e.g., the long-range communication connection **46** illustrated in FIGS. **2-5**), and to facilitate wireless communication with one or more welding-related devices (e.g., the welding equipment/accessory node devices **52**) via a short-range wireless communication network (e.g., the local wireless connections **44** of the local wireless network **40**). As will be appreciated, the welding power supply unit **12** also includes wireless communication circuitry **72** configured to facilitate the wireless communication with the master node device **42** via the long-range wireless communication link (e.g., the long-range communication connection **46** illustrated in FIGS. **2-5**). In addition, the welding equipment/accessory node devices **52** also include wireless communication circuitry **72** configured to facilitate the wireless communication with the master node device **42** via the short-range wireless communication network (e.g., the local wireless connections **44** of the local wireless network **40**).

As described above, in certain embodiments, the long-range wireless communication link (e.g., the long-range communication connection **46** illustrated in FIGS. **2-5**) between the welding power supply unit **12** and the master node device **42** may be formed as an RF communication link, and the short-range wireless communication network (e.g., the local wireless connections **44** of the local wireless network **40**) between the welding equipment/accessory node devices **52** and the master node device **42** may similarly utilize RF communication techniques. As such, in certain embodiments, the wireless communication circuitry **72** of the devices may include RF communication circuitry, such as RF transmitters and sensors. However, in other embodiments, any suitable means for communicating wirelessly between the welding power supply unit **12** and the master node device **42** and between the welding equipment/accessory node devices **52** and the master node device **42** may be utilized.

As described above, the wireless communication circuitry **72** of the master node device **42** and the wireless communication circuitry **72** of the welding power supply unit **12** may be configured to establish and utilize the long-range wireless communication link (e.g., the long-range communication connection **46** illustrated in FIGS. **2-5**) between the welding power supply unit **12** and the master node device **42** at a transmission range of approximately 300 feet. However, in other embodiments, the transmission range of the long-range wireless communication link (e.g., the long-range communication connection **46** illustrated in FIGS. **2-5**) between the welding power supply unit **12** and the master node device **42** may exceed the 300 feet previously mentioned herein.

In addition, as described above, the wireless communication circuitry **72** of the master node device **42** and the wireless communication circuitry **72** of the welding equipment/accessory node devices **52** may be configured to establish and utilize the short-range wireless communication network (e.g., the local wireless connections **44** of the local wireless network **40**) between the welding equipment/accessory node devices **52** and the master node device **42** at a transmission range of approximately 20-25 feet from the master node device **42**. However, in other embodiments, the transmission range of the short-range wireless communication network (e.g., the local wireless connections **44** of the local wireless network **40**) between the welding equipment/accessory node devices **52** and the master node device **42** may be in a range of approximately 10 feet to approximately 50 feet from the master node device **42**, in a range of approximately 15 feet to approximately 40 feet from the master node device **42**, in a range of approximately 20 feet to approximately 30 feet from the master node device **42**, or any other suitable range. In general, the local wireless connections **44** of the local wireless network **40** are created by lowering the power of the wireless communication circuitry **72** such that they do not radiate too far, thereby wasting power and potentially interfering with other nearby devices.

In addition, as illustrated in FIG. **8**, in certain embodiments, the master node device **42** and the welding power supply unit **12** include wired communication circuitry **74**

configured to facilitate wired digital communication (e.g., welding cable communication (WCC), as well as other forms of wired digital communication) with the welding power supply unit **12** via a weld cable (e.g., the weld cables **20**, **28**) or other wired digital communication link either as a primary mode of communication, or when communication over the long-range wireless communication link (e.g., the long-range communication connection **46** illustrated in FIGS. **2-5**) between the welding power supply unit **12** and the master node device **42** is not allowed (e.g., during temporary interruption of the long-range communication connection **46**), or both.

Network Association and Security

In addition, as illustrated in FIG. **8**, the master node device **42** includes network association/security circuitry **76** for facilitating association of the welding equipment/accessory node devices **52** with the master node device **42**, as well as ensuring that welding equipment/accessory node devices **52**, the master node device **42**, and the associated welding power supply unit **12** operate securely with each other by, for example, preventing unauthorized access to the local wireless network **40** formed between the welding equipment/accessory node devices **52** and the master node device **42**.

As described above, the communications traffic from each welding equipment/accessory node device **52** is sent to the master node device **42**, which acts as a router and prioritization controller, and which ultimately routes the correct messages to the final destination as shown in FIGS. **4** and **5**. The local wireless network **40** that is formed between the welding equipment/accessory node devices **52** and the master node device **42** will be secure insofar as only welding equipment/accessory node devices **52** having proper credentials (e.g., indicating that the device is an authorized and certified device appropriate for use with the master node device **42**) and having been synchronized based on "user intent" input (e.g., via depression of synchronization mechanisms, such as the association buttons **70** described above) are allowed to "associate" with the local wireless network **40**. Furthermore, the master node device **42** is only allowed to control one welding power supply unit **12**, thereby further enhancing the security of the formed local wireless network **40**.

As described above, in certain embodiments, the association procedure carried out by the network association/security circuitry **76** is initiated by manually pressing and holding a specially designed association button **70** of each device involved in the pairing step, such that the pairing is always performed between the master node device **42** and each device the operator wishes to add to the local wireless network **40**. Once a welding equipment/accessory node device **52** has been successfully registered and associated with the master node device **42**, it will remain as an active participant in the local wireless network **40** until the local wireless network **40** is dissolved. Following dissolution of the local wireless network **40**, each welding equipment/accessory node device **52** and the master node device **42** are free to become associated with other local wireless networks **40**.

The master node device **42** (e.g., using the network association/security circuitry **76**) will determine through preliminary communication with the welding equipment/accessory node device **52** that it is the master node device **42** in the communication session, and that the other node in the communication session is a welding equipment/accessory node device **52** with the proper authorization credentials, MAC address, and security access code, among other things. This verification is necessary in order to prevent other wireless devices (e.g., Zigbee wireless devices) that are not authorized and certified, and which do not meet the safety and reliability standards, from joining the local wireless network **40** and being able to exchange data with other devices on the local wireless network **40**.

Once a welding power supply unit **12** is accepted by the master node device **42**, the two initial devices form the local wireless network **40**. The first device to join the master node device **42** in the process of forming the local wireless network **40** is always the welding power supply unit **12**, or dongle-type device **64**, thus the simplest and smallest network consists of at least one controller, normally identified as the master node device **42**, and an accessory node such as the welding power supply unit **12**, which is considered the device expected to be controlled by the network controller (i.e., the master node device **42**).

Soon after establishing the local wireless network **40**, the network association/security circuitry **76** of the master node device **42** (again, commonly referred to as the network controller) will program the accessory node with a channel number, a sleep/wakeup timer value, an initial transmission power level, and other parameters needed to control transmissions within the local wireless network **40**. The network association/security circuitry **76** of the master node device **42** will also inquire status information from the accessory node, such as battery level, receiver sensitivity, and other parameters which are helpful in managing the RF resources of the accessory node. It will be appreciated that these steps will also be done with the various welding equipment/accessory node devices **52** that are subsequently added to the local wireless network **40** (e.g., not just the welding power supply unit **12** or dongle-type device **64** upon initiation of the local wireless network **40**).

The association method described herein is different from typical association methods (e.g., Zigbee association methods) which allow wireless nodes to connect simply by providing a unique serial number (e.g., Node ID). When implementing a control and communication network, such methods do not provide a desired level of security since virtually any device can mimic a Node ID in the correct manufacturer range and proper format, and can therefore be granted access in situations where access is not appropriate, which can result in unsafe operation, among other things.

As briefly described above with respect to FIG. **7**, when the network association/security circuitry **76** of the master node device **42** notices association key presses from the user (e.g., depression of the dedication association buttons **70**) on two devices, the network association/security circuitry **76** initiates the association process. The network association/security circuitry **76** remains in the association mode for as long as the buttons **70** remain pressed by the user. While in association mode, the network association/security circuitry **76** initially sets the communication channel to 15, requests a clear channel assessment on Channel 15, and lowers the transmission power of the master node device **42** (e.g., of the wireless communication circuitry **72**) to the lowest level allowed by the chipset (e.g., approximately −17 dBm in certain embodiments) in order to limit the transmission range from which other welding equipment/accessory node devices **52** may hear its beacon and decide to join.

The master node device **42** then sends out a beacon on Channel 15, announcing its availability as a network coordinator for welding equipment/accessory node devices **52** within the wireless transmission range. All association takes place on Channel 15 unless energy detection circuitry **78** of the master node device **42** and/or a welding equipment/accessory node device **52** deems it a relatively noisy channel, at which point the next available channels (e.g., Channels 20, 25, and 26) are used. In certain embodiments, the master node

device **42** repeats the beacon every 10 milliseconds, and waits 20 milliseconds for a response from any welding equipment/accessory node device **52** wishing to associate with the master node device **42**. If no answer is received on Channel 15 for a given time period (e.g., 1000 milliseconds in certain embodiments) and algorithms of the energy detection circuitry **78** report relatively low energy (i.e., the channel is clear enough to communicate over), the network association/security circuitry **76** assumes that there are no welding equipment/accessory node devices **52** wishing to associate with the master node device **42**, and terminates the association transaction. If the algorithms of the energy detection circuitry **78** detect noise on Channel 15, and the user is still pressing the association button **70** on the master node device **42**, the master node device **42** will send out beacons on the next available channel (e.g., Channel 20), repeating the beaconing procedure until either of two things occurs: (1) a welding equipment/accessory node device **52** is found and the association procedure is initiated by the network association/security circuitry **76**, or (2) a channel seek counter wraps around to a value of 15 after having traversed all other available channels (e.g., Channels 20, 25, and 26 in certain embodiments). As long as the user keeps pressing the association button **70** on the master node device **42**, the algorithms will keep switching through channels when noise is present in order to find a clear channel that it can use to complete the association of a welding equipment/accessory node device **52** to the master node device **42**.

If a welding equipment/accessory node device **52** is detected, the master node device **42** will request a MAC (media access control) address and an accessory node function code, among other things, from the welding equipment/accessory node device **52** in order to make a decision whether to map the welding equipment/accessory node device **52** into the local wireless network **40** or to reject it. The method is different from typical node association methodologies (e.g., Zigbee) that allow devices to associate if they are of the "correct" type (i.e., an End Point node can always connect to a Coordinator node). A welding equipment/accessory node device **52** requesting association with the master node device **42** must meet at least three minimum criteria. First, the welding equipment/accessory node device **52** must have a "short network address" of 0xFFFF, which means that the welding equipment/accessory node device **52** has not been persistently programmed with an address by another master node device **42** (i.e., that it belongs to another local wireless network **40**). Second, the welding equipment/accessory node device **52** must possess a MAC address in the proper manufacturer's range. Third, the welding equipment/accessory node device **52** must possess the correct functionality per the sequence of association rules. For example, as described above, the first node to connect to the master node device **42** is the equipment node (e.g., the welding power supply unit **12** or other industrial equipment being controlled). In addition, duplication of welding equipment/accessory node device **52** types is limited and, in some instances, prevented. For example, some node types are allowed to have multiple instances of each type in the local wireless network **40**, while some are not (e.g., there may be only one welding torch **18** per each local wireless network **40**, while there may be multiple sensors **66** per each local wireless network **40**). Furthermore, the association rules ensure that the minimum set of power save and data throughput are required by the type of local wireless network **40** the master node device **42** will build.

Assuming the welding equipment/accessory node device **52** passes the minimum criteria for being associated with the master node device **42**, the network association/security circuitry **76** will map the welding equipment/accessory node device **52** into the local wireless network **40** and program the welding equipment/accessory node device **52** with a "short network address" representing its functionality (within the local wireless network **40**) and other hierarchical network parameters, as well as sleep mode timing if the welding equipment/accessory node device **52** is a battery powered device that needs to be temporarily put to sleep during operation. Once the welding equipment/accessory node device **52** has been added to the local wireless network **40**, the network association/security circuitry **76** will program the welding equipment/accessory node device **52** with a heartbeat interval, and will expect it to provide a periodic indication that it is still alive in order to maintain the safety and security features of the local wireless network **40**. The heartbeat data packet from the welding equipment/accessory node device **52** may include the following data: (1) the battery level (e.g., high, medium, or low) of the welding equipment/accessory node device **52**, (2) the transmission power level setting of the welding equipment/accessory node device **52**, (3) the receiver sensitivity measured from the previous packet, and (4) optional custom signature of the welding equipment/accessory node device **52**, among other things. It will be appreciated that, in certain embodiments, any and all subsets of this data may be provided by the welding equipment/accessory node device **52**.

If a welding equipment/accessory node device **52** drops off the local wireless network **40** due to an electrical or mechanical malfunction, and such welding equipment/accessory node device **52** fails to log three consecutive heartbeat cycles with the master node device **42**, the network association/security circuitry **76** will act in the following. If the welding equipment/accessory node device **52** is actively controlling equipment such as the welding power supply unit **12** (e.g., it is determined that the last control command for the controlled equipment came from the welding equipment/accessory node device **52**), then the network association/security circuitry **76** will immediately disassociate that welding equipment/accessory node device **52** from the local wireless network **40** and send an error flag to the welding equipment/accessory node device **52** used to provide the user feedback. If the welding equipment/accessory node device **52** is "safety non-critical" such as a user display device, then the network association/security circuitry **76** will log the loss of the welding equipment/accessory node device **52** in a buffer, and will attempt to locate the welding equipment/accessory node device **52** by repeating association beacons and only allow that particular welding equipment/accessory node device **52** with that particular address to automatically re-associate provided that: (1) the local wireless network **40** that associated the welding equipment/accessory node device **52** in the first place is still running (e.g., the local wireless network **40** has not been dismantled), and (2) the short network address, node function, and manufacturer codes match the node that was detected to have been lost.

If any welding equipment/accessory node device **52** determines that it has become disconnected from the local wireless network **40** with which it was properly associated, the welding equipment/accessory node device **52** will take a series of intelligent steps to locate the master node device **42**. For example, the welding equipment/accessory node device **52** may check for channel noise and switch channels away from a predefined channel (e.g., set by the master node device **42**) that happens to be noisy. In addition, the welding equipment/accessory node device **52** may increase its transmission power to the maximum allowable. Furthermore, the welding equipment/accessory node device **52** may send out "distress"

packets to the master node device **42** to tell it that the welding equipment/accessory node device **52** has trouble with RF transmissions, for example. In response, as described in greater detail below, the network association/security circuitry **76** of the master node device **42** may adjust the "network footprint" (e.g., increase the signal strength of the wireless communication circuitry **72** of the master node device **42**) in order to mitigate the special circumstances of the "distressed node."

If these steps fail, the welding equipment/accessory node device **52** will determine that it has been orphaned from the local wireless network **40** it was associated with, and will reset itself into an un-associated type node by, for example, changing its short network address to 0xFFFF, changing its communication channel to Channel 15, changing its status to "unassociated," clearing its log and heartbeat settings, and putting itself into a low power mode or OFF mode, waiting to be awakened by an operator pressing its association button **70**. The mechanism used by the welding equipment/accessory node device **52** to tell if it is still connected to the master node device **42** is to observe the details of the acknowledge ("ACK") packets sent by the master node device **42** in response to each of its heartbeat packets. Each packet, whether heartbeat or not, will have to be acknowledged within a given time period (e.g., 100 milliseconds in certain embodiments) by the master node device **42**. Other data collected as a result of reading the ACK packet will help the welding equipment/accessory node device **52** determine if it is in danger of losing the wireless communication link with the master node device **42**. The mechanism for accomplishing this is described in greater detail below.

If the network association/security circuitry **76** of the master node device **42** decides to disband the local wireless network **40** it has formed as a result of losing the long-range communication connection **46** to the device being controlled (e.g., the welding power supply unit **12**), it will send each welding equipment/accessory node device **52** associated with the local wireless network **40** a request to disassociate, and will delete its table entries of the device information that has responded with an ACK to its request to disassociate command. Once all welding equipment/accessory node devices **52** previously associated with the master node device **42** have been successfully disassociated, the master node device **42** will enter a sleep mode or OFF mode and wait to be awakened by the user pressing its association button **70**.

Improved Robustness

The wireless network architecture described herein allows for an industrial wireless network architecture that is tolerant of transmission interruptions, lost communication links, and data errors normally encountered in relatively noisy factory environments, and includes methods of working around the physical limitations of RF transmissions through protocol intelligence built into the nodes (e.g., the master node devices **42** and the welding equipment/accessory node devices **52**) making up the local wireless networks **40**. The techniques described herein address the inherent nature of RF transmissions being somewhat unreliable. Any particular transmission may be lost or its data corrupted and any link, no matter how solid it may have appeared at one time, could quickly become an unreliable link. The intelligence for dealing with such physical limitations and providing improved network robustness are described in greater detail below. These techniques ensure continuous improvement (e.g., updated approximately every 100 milliseconds in certain embodiments) of the reliability of the wireless communication between the master node device **42** and the welding equipment/accessory node devices **52** (as well as between the master node device **42** and the associated welding power supply unit **12** in embodiments using a long-range wireless communication connection **46**).

As described above, the communication links between the nodes (e.g., the master node devices **42** and welding equipment/accessory node devices **52**) making up the local wireless network **40** are established only when a human operator expresses intent to form the communication links by, for example, pressing association buttons **70** on each device to be paired. As also described above, the network configuration of each local wireless network **40** is always a "star" configuration formed with the master node device **42** acting as the master network controller between the welding equipment/accessory node devices **52** and the CID (e.g., the welding power supply unit **12**). This guarantees only one master controller (i.e., the master node device **42**) is responsible for setting up and managing the local wireless network **40**, allowing only the welding equipment/accessory node devices **52** with appropriate credentials to join the local wireless network **40**, and being aware of every source and destination of data in the local wireless network **40**.

In certain embodiments, when forming a link using the association procedures described above, the wireless communication circuitry **72** of the two nodes to be connected are set into the lowest RF power mode (e.g., having a relatively short transmission range) such that their signals cannot be detected by other more distant master node devices **42**, such that there will be no mistake associating the nodes that the operator intended to associate. For example, when the association buttons **70** on the nodes (e.g., the master node device **42** and a welding equipment/accessory node device **52**) to be associated are pressed, the maximum transmission range of the nodes may be adjusted to be less than approximately 2 feet.

As described above, the welding equipment/accessory node devices **52** provide credentials to the network association/security circuitry **76** of the master node device **42**, thereby proving they belong to the local wireless architecture described herein. For example, the welding equipment/accessory node devices **52** provide an appropriate MAC address range, network device classification, network functionality, and correct associated password, among other things. The credential requirements are different than typical ad-hoc wireless connections normally allowed through Zigbee (802.15.4), WiFi (802.11.a/b/g/n), or Bluetooth (802.15.1), which typically allow any device with the proper radio to join a network provided the device specifies (in most cases) its network functionality. The increased credential requirements described herein guarantee that only devices manufactured and certified at the highest standards are allowed to be part of the local wireless networks **40**. More specifically, the increased credential requirements described herein ensure that all devices used in the local wireless networks **40** have been fully tested and certified to operate relatively error-free. As such, conventional wireless devices (e.g., conventional Zigbee devices) will not have access to the local wireless networks **40** set up by the operators.

Once associated, a set of welding equipment/accessory node devices **52** (through the respective master node device **42**) can control one and only one welding power supply unit **12**, removing the possibility of inadvertently controlling other welding power supply units **12** in the vicinity. The stringent association rules guarantee the safety of human operators in an industrial setting. In addition, all communication between nodes are encrypted with an AES (Advanced Encryption Standard) key published to the local wireless network **40** by each master node device **42** at the time of formation of the local wireless network **40**. Thus, communi-

cations between the nodes of the local wireless network **40** cannot be hacked by a device in close RF proximity of the local wireless network **40**.

Each welding equipment/accessory node device **52** in a local wireless network **40** has a hard-coded functionality classification that cannot be changed except through a hardware modification of the code identifying the welding equipment/accessory node device **52**. Thus, for example, a welding wire feeder **14** will always act as a wire feeder in any local wireless network **40** with which it is associated. In addition, the network association/security circuitry **76** of each master node device **42** will only allow a certain number of nodes of each specific functionality type that would be necessary to perform a particular welding task. For example, in certain embodiments, the master node device **42** may not allow more than one welding wire feeder **14** or more than one welding torch **18** to be associated with the local wireless network **40** since there is only one operator, only one welding torch **18** may be operated by the operator at a time, and a given welding torch **18** only makes use of one welding wire feeder **14** at a time. Conversely, multiple display nodes may be allowed since multiple devices can display data related to the welding operations. However, only one such display node (e.g., a given welding pendant **36**) is allowed to directly command the associated welding power supply unit **12**. In certain embodiments, control responsibility may be moved from one device to another by the master node device **42** (provided that the device includes the capability to control the welding power supply unit **12**), but may only reside in one particular device at any one time.

The local wireless network **40** established through the association rules described above only exists for as long as the associated welding power supply unit **12** is active. Once the welding power supply unit **12** has been turned off or the dongle-type device **64** has been removed from the 14-pin connector of the welding power supply unit **12**, the local wireless network **40** is disbanded by the intelligent master node device **42**. In addition, the master node devices **42** actively monitor the RF environment around themselves, and negotiate different channels with other master node devices **42** in order to allow the maximum co-existence of local wireless networks **40** in relatively noisy industrial environments. The master node devices **42** also maintain the communication links between the welding equipment/accessory node devices **52** and the welding power supply unit **12** through detailed transmission acknowledgement, monitoring of battery lives, and RF quality and issuance of periodic heartbeats, for example. All communication links in the local wireless network **40** are intelligently maintained for the duration of the life of the local wireless network **40**.

If battery levels of welding equipment/accessory node devices **52** that are not line-powered are deemed too low to provide acceptable RF links, the welding equipment/accessory node devices **52** are not allowed to join the local wireless network **40**. In such an event, a status warning is shown to the operator of one of the display nodes in the local wireless network **40**, such as the welding helmet **34** or the welding pendant **36**, requesting that the operator charge the battery of the welding equipment/accessory node device **52** with the low battery capacity. In addition, as described in greater detail below, the master node device **42** constantly monitors power levels in each of the welding equipment/accessory node devices **52** of the local wireless network **40** to ensure that the welding equipment/accessory node devices **52** will be able to wake up (if they are battery powered) at a programmed wake time, and be able to maintain their respective wireless communication link with the master node device **42**.

Once associated with the local wireless network **40**, each welding equipment/accessory node device **52** will provide heartbeat packets to the master node device **42** at pre-determined time intervals. Missing a certain number of heartbeats in a row is usually indicative of the RF link between the particular welding equipment/accessory node device **52** and the master node device **42** having been lost, and the welding equipment/accessory node device **52** will be disassociated from the local wireless network **40**.

In addition, the energy detection circuitry **78** of the master node device **42** continuously monitors channel noise on the current channel to make sure there is an expectation of acceptable "quality of service" in order for transmissions to occur within the local wireless network **40**. If noise detected on the current channel is above a certain (e.g., predetermined or pre-set) threshold, the master node device **42** will find a relatively clear channel and move all of the welding equipment/accessory node devices **52** in its local wireless network **40** to the new channel. The master node device **42** also continuously monitors receiver sensitivity data provided by each welding equipment/accessory node device **52**, and adjusts it transmission power (e.g., the signal strength of the wireless communication circuitry **72**) accordingly in order to ensure that the master node device **42** sends data out at appropriate signal strengths to be reliably detected by all of the welding equipment/accessory node devices **52** in its local wireless network **40**, but to not be "too loud" to disturb other networks nearby. In other words, the master node device **42** utilizes the receiver sensitivity data from the welding equipment/accessory node devices **52** as signal strength feedback data to appropriately adjust the signal strength of transmission from the master node device **42**. In addition, the master node device **42** may cause the transmission power of the welding equipment/accessory node devices **52** to be similarly adjusted.

Loss of the long-range communication connection **46** between the master node device **42** and the welding power supply unit **12** will be detected quickly by the welding power supply unit **12**, and the device will be placed in a safe mode of operation. Certain methods for mitigating the temporary loss of RF links, as well as methods to re-establish a lost link, are described in greater detail above. These methods ensure that the maximum effort is made by the master node devices **42** and the welding equipment/accessory node devices **52** in order to maintain what might otherwise be viewed as unreliable RF links.

In addition, the data transferred to and from the master node device **42** and the welding equipment/accessory node devices **52** will be packetized in optimum size packets. As described above, the star topology of the local wireless networks **40** guarantees a single intelligent controller (e.g., the master node device **42**) for each local wireless network **40**, along with orderly transmissions of data between the master node device **42** and the welding equipment/accessory node devices **52**. This ensures that the minimum amount of wireless transmissions take place and the welding equipment/accessory node devices **52** do not spend their time arbitrating for their turn to communicate, as in conventional ad-hoc topologies. The master node device **42** receives data from all of the welding equipment/accessory node devices **52** in its local wireless network **40**, and the master node device **42** packetizes and sends the data to the final destination using the optimum packet size and timing, which is determined in real time (e.g., updated approximately every 50 milliseconds in certain embodiments) from historical performance monitoring of the local wireless network **40**. This helps reduce colli-

sions of data transmissions between different welding equipment/accessory node devices **52** while improving transmission quality.

Power Management and Optimization

Some (or all) of the welding equipment/accessory node devices **52** will be powered by on-board batteries **80**, as opposed to being plugged into sources of power, to facilitate the portability of the welding equipment/accessory node devices **52** among remote locations. In order to facilitate the use of on-board batteries **80** in all welding equipment/accessory node devices **52** in the local wireless network **40** (as well as the master node devices **42** and the welding power supply unit **12**), the master node devices **42** (as well as the other devices) include power optimization circuitry **82** configured to use unique methods to save power among the welding equipment/accessory node devices **52** while still maintaining the necessary minimum latency and adequate levels of availability. These power optimization methods implement adaptive algorithms to determine what the optimum sleep/awake timing is for each local wireless network **40** independent of other wireless networks while still mainlining the required level of availability.

Following the pairing procedures described above, the power optimization circuitry **82** of the master node device **42** determines at least the following parameters about the local wireless network **40** it has assembled: (1) the number of welding equipment/accessory node devices **52** in the local wireless network **40**, (2) the types of welding equipment/accessory node devices **52** in the local wireless network **40**, (3) the timing requirements (e.g., maximum latency) of the most critical welding equipment/accessory node devices **52**, (4) the transmission power footprint of the local wireless network **40** from the last set of transmissions associated with each welding equipment/accessory node device **52**, and (5) the optimum channel to operate in (e.g., the least amount of measured noise from nearby devices, as described above). Using this information, as described in greater detail below, the power optimization circuitry **82** of the master node device **42** formulates a "sleep mode strategy" and schedule for all the welding equipment/accessory node devices **52** under its control to ensure that all parameters of the local wireless network **40** are met.

The power optimization circuitry **82** of the master node device **42** begins by setting the network latency of the local wireless network to that of the most stringent requirement of any of the welding equipment/accessory node devices **52** in the local wireless network **40**. For example, the local wireless network **40** will be set to respond at least within 100 milliseconds if the requirements of the welding wire feeder **14** are that its feed rate must be updated no less frequently than every 100 milliseconds. The node controlling the Controlled Industrial Device (CID) (e.g., the welding power supply unit **12**) has been referred to herein as, for example, the dongle-type device **64**. This device node is assumed to always be powered by an AC power source, such as the power source **30** illustrated in FIG. **1**, so that it is always available to send alerts to the master node device **42** or to receive commands from the master node device **42**. This device node has a maximum latency requirement determined by safety requirements as well as certain loop dynamics of its control systems.

The power optimization circuitry **82** of the master node device **42** determines a "practical latency" time for each welding equipment/accessory node device **52** in the local wireless network **40** such that the welding equipment/accessory node devices **52** that are not critical to the safe operation of the equipment can spend more time in sleep mode since, for example, user updates are not as critical. In general, the welding power supply unit **12**, the welding wire feeder **14**, and the welding control pendant **36** are considered to be critical to the safe operation of the equipment. Each welding equipment/accessory node device **52** that can support a practical latency parameter (e.g., less stringent latency requirement) will communicate this fact to the master node device **42** upon completion of the pairing and association procedure described above. In general, the practical network latency parameters are acceptable response times that are generally greater than the overall network latency parameter of the local wireless network **40** that is set based on the most stringent requirements of the local wireless network, as described above.

The power optimization circuitry **82** of the master node device **42** programs each welding equipment/accessory node device **52** with a next wake up time minus a "network latency parameter," which is initially determined from full-time operation (e.g., during the first five minutes following formation of the local wireless network **40**), and communicates to the welding equipment/accessory node devices **52** to place themselves in sleep mode as soon as their individual tasks list is empty (e.g., there are no pending requests or schedules tasks due). In certain embodiments, this network latency parameter is calculated to be twice the average transmission latency for the slowest welding equipment/accessory node device **52** in the local wireless network **40**. In certain embodiments, adjustments to the network latency parameter are made if the average latency of the last three transmissions is higher than the initially calculated value, which means that over time the welding equipment/accessory node devices **52** require more time to wake up and communicate with the master node device **42** due to possible increases in noise on a certain channel, overcrowding of the RF spectrum by multiple noise sources, and so forth. In addition, the power optimization circuitry **82** of the master node device **42** places the master node device **42** into sleep mode for a duration of time that is approximately 95% of the amount of time that it programmed all of the welding equipment/accessory node devices **52** in the local wireless network **40**. When the master node device **42** is placed in sleep mode, all network-specific information (e.g., routing tables, latency timing, node functionality, and so forth) are stored into non-volatile random access memory (RAM) **84** of the master node device **42** for use when the master node device **42** wakes up.

While in sleep mode, the master node device **42** monitors special operator input devices **86** on the master node device **42** (e.g., touch screens, buttons, keys, switches, and so forth, on an exterior surface of the master node device **42**, as illustrated in FIG. **7**) in the event that the operator needs to communicate with the CID (e.g., the welding power supply unit **12**) sooner than the network latency would otherwise permit. Activating any of these operator input devices **86** produces an interruption to a processor **88** (e.g., a microprocessor, in certain embodiments) controlling the master node device **42**, which wakes the master node device **42** from sleep mode, allowing the master node device **42** to start communicating with the welding equipment/accessory node devices **52** in the local wireless network **40**. For example, an operator may pick up a welding control pendant **36** (functioning as the master node device **42** for the local wireless network **40**) that is in sleep mode, and press a button on the welding control pendant **36**, which serves as the wake event for the processor **88**. The processor **88** wakes up due to the interrupt caused by the button press, interprets the button press as a specific command, sends that command to the CID (which never goes into sleep mode), and shortly thereafter acknowledges and executes the requested command. If a node other than the CID or master node device **42** (e.g., the welding equipment/acces-

sory node devices **52**) receives a user input in a similar manner, its own processor **88** (e.g., a microprocessor, in certain embodiments) will log the command in a queue in its own non-volatile random access memory (RAM) **84**, and wait for the network latency timer to expire before sending the information to the master node device **42**.

The embodiments described herein also allow for the CID (e.g., the welding power supply unit **12**) and/or dongle-type device **64** to be powered by on-board batteries **80** (e.g., in a case of an engine drive unit when the main motor has been shut off). In this case, the CID or dongle-type device **64** will observe the standard sleep mode operation of the welding equipment/accessory node devices **52** and the master node device **42**, as described above. The minimum latency value the CID or dongle-type device **64** will report to the master node device **42** will take into account all of the timing dynamics and requirements of the CID or dongle-type device **64** to make sure that it is safe for it to respond within the allocated network latency. The local wireless network **40** established according to the association procedures described above will persist through an infinite number of sleep states for as long as the local wireless network **40** is not purposely disbanded.

The battery monitoring methodology described herein allows for timely and accurate user notifications to ensure that the capacities of the on-board batteries **80** of the welding equipment/accessory node devices **52** are managed and that such information is properly displayed to the user. For example, each welding equipment/accessory node device **52** sends battery status information to the master node device **42**, which will provide a display **90** (see, e.g., FIG. **7**) to the user of each node's remaining battery capacity. In certain embodiments, such notification will show a graphical representation of the battery level with a 5% or better resolution of the remaining battery capacity, along with a "Remaining Usage Time" display (e.g., in hours and minutes) under current usage conditions. In addition, in certain embodiments, the master node device **42** may display the same information relating to its own battery capacity and remaining usage time. Charging information may also be transmitted to the master node device **42** from each welding equipment/accessory node device **52** and displayed on the display **90** when such node is plugged into a battery charger. For example, the charging information may show the "Charge Current" as well as an estimated time to full charge. Furthermore, in certain embodiments, the master node device **42** may provide for visual and/or audible alarms in the event that battery levels of any of the welding equipment/accessory node devices **52** fall below a given threshold (e.g., below approximately 30%) and will continue to provide periodic alarms until the particular on-board battery **80** is recharged. In addition, in certain embodiments, the master node device **42** will disassociate a welding equipment/accessory node device **52** if its on-board battery **80** runs out of power, and will report to the user the action taken through audio and/or visual cues via the display **90**.

Sensor Data Transmission

As described above, sensors **66** that may not necessarily be involved with the welding operations may also utilize the local wireless networks **40** set up by factory personnel. As the local wireless networks **40** are established randomly and may only exist for a relatively short period of time, the sensors **66** may continually have to try and find a master node device **42** that it can associate with and be able to transfer its data payload to an external destination (e.g., to cloud storage or other centralized and/or distributed control system). In certain embodiments, a sensor **66** will take samples of its designated monitoring input(s) at regular intervals (e.g., approximately every 100 milliseconds), which may be programmable through the wireless links, and buffer the data in its non-volatile memory until the sensor **66** is able to connect to a local wireless network **40** and send the buffered data to its final destination. In certain embodiments, the sensors **66** may initially be programmed with a hard-coded destination IP address, which represents the target location to which the sensor **66** should send its data. The destination IP address may then be changed (e.g., through a master node device **42** or other display device of a local wireless network **40**) by a requestor with appropriate credentials.

The sensors **66** may associate with available master node devices **42** as follows. An unassociated sensor **66** may wake up and listen for beacons sent out by any master node device **42** nearby that is announcing that they are the master node device **42** of a currently established local wireless network **40**, and that they are ready to allow association with any nearby sensors **66** (or welding equipment/accessory node devices **52**). If a master node device **42** is detected within RF range of the sensor **66**, the sensor will request permission to associate with the master node device **42**. At this point, the master node device **42** and the sensor **66** will exchange credentials in the same manner as the master node device and the welding equipment/accessory node devices **52** exchange credentials, as described in greater detail above. For example, the sensor **66** will convey information to the master node device relating to an appropriate MAC address range, network device classification, network functionality, and correct associated password, among other things, and the network association/security circuitry **76** of the master node device **42** will determine if the sensor **66** is compatible with the master node device **42**. If the sensor **66** and the master node device **42** are determined to be compatible, a data link connection between the sensor **66** and the master node device **42** is established. This connection is not the same as the typical "command and control" associations made with the welding equipment/accessory node devices **52**. Rather, the connection between the sensor **66** and the master node device **42** merely allows sensor data to move between the sensor **66** and some other destination end point. In other words, the master node device **42** functions as an intelligent router for the sensor data to/from the sensor **66**.

Once a connection link is established between the sensor **66** and the master node device **42**, the sensor **66** will request a "capabilities list" from the master node device **42**. This capabilities list tells the sensor **66**: (1) if the master node device **42** has access to the World Wide Web (WWW), (2) if the master node device **42** is aware of other master node devices **42** in the vicinity with access to the WWW, (3) the lifetime duration of the local wireless network **40** established by the master node device **42**, (4) the battery status of the master node device **42** (and whether it is line-powered or battery-powered), and (5) the sleep period of the local wireless network **40** controlled by the master node device **42** (with which the sensor **66** may synchronize itself). It will be appreciated that, in certain embodiments, the "capabilities list" may include a subset of these listed items.

If the master node device **42** advertised a connection to the WWW, or if the master node device **42** to which the sensor **66** is associated with knows of other master node devices **42** in the nearby vicinity that have advertised connections to the WWW, the sensor **66** will send a ping request to the master node device **42** presenting the final destination of its data repository. The master node device **42** may have an Internet connection itself, in which case the master node device **42** acts as a bridge between the local wireless network **40** that it masters and the WWW, or it may forward requests through the back end of the CID (e.g., the welding power supply unit **12**), as described above.

If the master node device **42** does not advertise a connection to the WWW, or any knowledge of how to access the WWW (e.g., through other master node devices **42**), the sensor **66** will disassociate itself from the master node device **42** to which it was briefly connected for the purpose of assessing access of the master node device **42** to the WWW, and will continue its discovery routine, as described above. In certain embodiments, if a previously detected master node device **42** is again detected by the discovery routine of the sensor **66**, the master node device **42** will store the hard-coded MAC address of the sensor **66** in its memory **84** as having been one that was connected briefly (e.g., for the purpose of WWW access capability assessment) and will disallow association to its local wireless network **40** unless the master node device **42** has gained access to the WWW in the time since the last association with the sensor **66** was requested. As such, time will be saved for the sensor **66** so that the sensor **66** does not unnecessarily waste battery power reassessing what was already determined (i.e., that the master node device **42** cannot provide access to the WWW).

If the master node device **42** can provide access to the WWW to the sensor **66**, the master node device **42** will attempt to send a ping to the destination address provided by the sensor **66**, and will wait for a response from the destination address. If the master node device **42** receives a ping response from the destination address, and the destination address is valid, the master node device **42** will inform the sensor **66** that a communication link with the destination address can be established, and that it is ready to receive data from the sensor **66**. The sensor **66** will then send a count of total packets it intends to transfer to the destination address, along with the first packet of data. The master node device **42** will buffer the data, perform all the security and checksums on the data to make sure it has not been corrupted, and send the data packet to the destination address that it pinged earlier for the sensor **66**.

The server at the final destination will accept the data, calculate a checksum, and send the checksum and a "current received packet" count as an ACK to the master node device **42**. The master node device **42** will forward the ACK information received from the server at the final destination to the sensor **66**. If satisfied with the ACK information, the sensor **66** will decrement its packet count and send the next packet to the master node device **42**. The sensor **66** will permanently delete all data from its non-volatile memory buffer that has been acknowledged to have been successfully received by the server at the final destination IP address. In addition, the sensor **66** will make a log entry in a "circular buffer log" showing the time and date, size of data transferred to the final destination, as well as the time and date range of the data that was transferred. In the event that the sensor **66** has been unable to access the WWW through any nearby master node devices **42** (e.g., with the proper access capabilities) for a long time, and the sensor **66** is running out of non-volatile buffer memory, the sensor **66** will start deleting the oldest sensor data to make room for the newest sensor data collected.

The data collection methods and timing parameters, sleep/wake up and search timing parameters, and final destination IP address parameters of the sensors **66** are all reprogrammable wirelessly from a server with proper credentials and whose origination (source) IP address match the final destination IP address of the particular sensor **66**. Thus, only the server being sought by the sensor **66** as its final destination, and which has received and acknowledged at least one packet of data from the sensor **66**, has the right to change the IP address settings and other settings of the sensor **66** following a successful exchange of credentials. The server at the final destination with the proper credentials also has the ability to inquire about the current settings of the sensor **66** and transmit logs to be sent to it on demand. Such status information requested by the final destination server will not be deleted on the sensor **66** as standard sensor data is normally deleted following successful upload to the server.

The mesh type connection of master node devices **42** allows sensor data to find a path to a welding cell that has access to the Internet. FIG. **9** is a schematic diagram illustrating the topology of a mesh-type network **92** of a plurality of master node devices **42** and associated local wireless networks **40** (e.g., weld cells) that communicate with each other and share information about each other's capabilities, thereby facilitating sensor data transmission from a plurality of sensors **66**, in accordance with embodiments of the present disclosure. While the master node devices **42** can only each control their own local wireless network **40** and associated welding power supply unit **12**, the master node devices **42** can communicate with each other and allow sensor data to move from master node device **42** to master node device **42** until it reaches a device that has access to the Internet. Such a device may be a welding power supply unit **12** with a built-in gateway between the front end (industrial control side) and back end (Internet access), such as weld cell #**3** illustrated in FIG. **9**. A range extending wireless router **68** not associated with any of the local wireless networks **40** can also act as a gateway to the Internet if a higher level of service guarantee is desired, since the formation of local wireless networks **40** may be relatively random in a typical factory setting.

Returning now to FIG. **8**, certain elements of the master node device **42** and the welding equipment/accessory node devices **52** (e.g., the network association/security circuitry **76**, the energy detection circuitry **78**, and the power optimization circuitry **82**) are characterized as being "circuitry." It will be appreciated that, in certain embodiments, this circuitry may be embodied as hardware, a combination of hardware and software, or only software. For example, in certain embodiments where this circuitry is software, the circuitry may include computer-readable instructions that are stored in memory **84**, and that are executable on the processor **88** of the particular device. However, in other embodiments, the circuitry may also include hardware elements. For example, in certain embodiments, the energy detection circuitry **78** may include certain hardware elements that assist in detecting noise levels.

While only certain features of the invention have been illustrated and described herein, many modifications and changes will occur to those skilled in the art. It is, therefore, to be understood that the appended claims are intended to cover all such modifications and changes as fall within the true spirit of the invention.

The invention claimed is:

1. A system, comprising:

a master node device comprising:

communication circuitry configured to facilitate communication with a welding power supply unit via a communication link, and to facilitate wireless communication with one or more welding-related devices via a wireless communication network; and

control circuitry configured to receive sensor data from one or more sensors within a physical vicinity of the wireless communication network, to route the sensor data to final destinations for the one or more sensors, and to provide a capabilities list to the one or more sensors upon request from the one or more sensors, wherein the capabilities list includes whether the master node device has access to the World Wide Web

(WWW), if the master node device is aware of other master node devices that have access to the WWW, a lifetime duration of the wireless communication network, a battery status of the master node device, and a sleep period of the wireless communication network, wherein the communication link has a greater transmission range than the wireless communication network.

2. The system of claim **1**, wherein the control circuitry is configured to allow association of the one or more sensors with the wireless communication network only if the sensors include authorization credentials that indicate the sensors may be used with the master node device.

3. The system of claim **2**, wherein the authorization credentials include at least a media access control (MAC) address and a function code of the sensors.

4. The system of claim **1**, wherein the control circuitry is configured to track a number of packets of sensor data to be sent from each of the one or more sensors, and to perform security and check sums on the sensor data received from each of the one or more sensors before routing the sensor data to its final destination.

5. The system of claim **1**, wherein the control circuitry is configured to reprogram operating parameters of each of the one or more sensors based on input from a server at the final destination for the respective sensor, wherein the operating parameters include sensor data collection timing parameters, sleep and wake timing parameters, and final destination IP address parameters.

6. The system of claim **1**, wherein the control circuitry is configured to provide a server at the final destination of a sensor of the one or more sensors with information relating to the sensor having the final destination.

7. The system of claim **1**, wherein the one or more welding-related devices comprise a welding wire feeder.

8. The system of claim **1**, wherein the one or more welding-related devices comprise a welding torch.

9. The system of claim **1**, wherein the one or more welding-related devices comprise a welding helmet.

10. The system of claim **1**, wherein the one or more welding-related devices comprise a welding pendant.

11. The system of claim **1**, wherein the one or more welding-related devices comprise a welding foot pedal.

12. The system of claim **1**, wherein a welding-related device of the one or more welding-related devices comprises the master node device.

13. The system of claim **1**, wherein the communication circuitry includes radio frequency (RF) transmitters and sensors.

14. A method, comprising:

wirelessly communicating between one or more welding-related devices and a master node device via a wireless communication network;

communicating between the master node device and a welding power supply unit via a communication link;

receiving sensor data from one or more sensors within a physical vicinity of the wireless communication network;

routing the sensor data to final destinations for the one or more sensors; and

providing a capabilities list from the master node device to the one or more sensors upon request from the one or more sensors, wherein the capabilities list includes whether the master node device has access to the World Wide Web (WWW), if the master node device is aware of other master node devices that have access to the WWW, a lifetime duration of the wireless communication network, a battery status of the master node device, and a sleep period of the wireless communication network, wherein the communication link has a greater transmission range than the wireless communication network.

15. The method of claim **14**, comprising allowing association of the one or more sensors with the wireless communication network only if the sensors include authorization credentials that indicate the sensors may be used with the master node device.

16. The method of claim **15**, wherein the authorization credentials include at least a media access control (MAC) address and a function code of the sensors.

17. The method of claim **14**, comprising using the mater node device to track a number of packets of sensor data to be sent from each of the one or more sensors with the master node device, and perform security and check sums on the sensor data received from each of the one or more sensors before routing the sensor data to its final destination from the master node device.

18. The method of claim **14**, comprising reprogramming operating parameters of a sensor of the one or more sensors based on input from a server at the final destination for the sensor, wherein the operating parameters include sensor data collection timing parameters, sleep and wake timing parameters, and final destination IP address parameters.

19. The method of claim **14**, comprising providing a server at the final destination of a sensor of the one or more sensors with information relating to the sensor having the final destination.

20. The method of claim **14**, wherein the wireless communication network comprises a wireless communication network having a transmission range of approximately 20-25 feet from the master node device, and wherein the communication link comprises a wireless communication link having a transmission range of approximately 300 feet or more from the master node device to the welding power supply unit.

21. The method of claim **14**, wherein the one or more welding-related devices comprise a welding wire feeder, a welding torch, a welding helmet, a welding pendant, or a welding foot pedal.

22. The method of claim **14**, wherein a welding-related device of the one or more welding-related devices comprises the master node device.

23. A wireless communication network, comprising:

one or more welding-related devices, wherein the one or more welding-related devices comprise a welding wire feeder, a welding torch, a welding helmet, a welding pendant, or a welding foot pedal;

a welding power supply unit configured to convert power from a power grid to power for a welding operation performed using the one or more welding-related devices; and

a master node device configured to facilitate wireless communication between the one or more welding-related devices and the master node device via a wireless communication network, to facilitate communication between the master node device and the welding power supply unit via a communication link, to receive sensor data from one or more sensors within a physical vicinity of the wireless communication network, to route the sensor data to final destinations for the one or more sensors, and to provide a capabilities list to the one or more sensors upon request from the one or more sensors, wherein the capabilities list includes whether the master node device has access to the World Wide Web (WWW), if the master node device is aware of other master node

devices that have access to the WWW, a lifetime duration of the wireless communication network, a battery status of the master node device, and a sleep period of the wireless communication network, wherein the communication link has a greater transmission range than the wireless communication network.

24. The system of claim **1**, wherein the wireless communication network comprises a wireless communication network having a transmission range of approximately 20-25 feet from the master node device, and wherein the communication link comprises a wireless communication link having a transmission range of approximately 300 feet or more from the master node device to the welding power supply unit.

25. The wireless communication network of claim **23**, wherein the wireless communication network comprises a wireless communication network having a transmission range of approximately 20-25 feet from the master node device, and wherein the communication link comprises a wireless communication link having a transmission range of approximately 300 feet or more from the master node device to the welding power supply unit.

* * * * *